GENERAL CONTENTS

Amendment Certificate

PREFACE

INTRODUCTION

ALPHABETICAL INDEX

PART 0 ... ...

PART 1 ... ... OPERATIONAL REQUIREMENTS

PART 2 ... ... STRUCTURAL STRENGTH AND DESIGN FOR FLIGHT

PART 3 ... ... STRUCTURAL STRENGTH AND DESIGN FOR LAND AND WATER

PART 4 ... ... DETAIL DESIGN AND STRENGTH OF MATERIALS

PART 5 ... ... AERO-ELASTICITY

PART 6 ... ... AERODYNAMICS AND FLYING QUALITIES

PART 7 ... ... INSTALLATIONS

PART 8 ... ... MAINTENANCE

PART 9 ... ... FLIGHT TESTS - HANDLING

PART 10 ... ... FLIGHT TESTS - INSTALLATIONS

APPENDICES

For details of the Chapter Titles, reference should be made to the Contents in front of each Part.

FS/3

AIR PUBLICATION 970

Revised Edition, May, 1935

DESIGN REQUIREMENTS FOR AEROPLANES

The amendments promulgated in the undermentioned amendment lists have been made in this publication.

Amendment List		Amendments made by	Date
Number	Date		
1 to 24 inclusive		Incorporated in this reprint	Feb. 1944
25	March, 1944 ~~26/1/45~~	W. H. Wittrick	March, 1946
26	May 1944	W. H. Wittrick	"
27	July 1944	W. H. Wittrick	"
28	Sept 1944	W. H. Wittrick	"
29	Nov 1944	W. H. Wittrick.	"
30	Jan 1945	W H Wittrick.	"
31	March 1945	W. H. Wittrick.	"
32	June 1945	W. H. Wittrick	"
33	Aug 1945	W. H. Wittrick	"
34	Nov 1945	W. H. Wittrick	"
35	1st Feb 1946	W. H. Wittrick	July, 1946.
36	1st May 1946	W. H. Wittrick	Oct. 1946
37	1st Aug 1946	W. H. Wittrick	Feb 1947

The amendments promulgated in the undermentioned amendment lists have been made in this publication.

Amendment List		Amendments made by	Date
Number	Date		

PREFACE

Layout

1. The requirements in this publication are grouped according to their origin or purpose and not on an airframe component basis. The General Contents shows the division into Parts, each Part being allocated one hundred chapter numbers in sequence.

2. Information and data supplementary to the specific requirements are included in the Appendices.

Index

3. To avoid a large number of cross references in the text, which would be necessary in a publication of this kind the alphabetical index serves as the method of cross referencing requirements for a component. The chapter contents lists are only for reference on the particular subject.

4. References consist of a chapter and paragraph number. Inclusion of the Part number is redundant since this is implicit in the chapter number e.g. Chapter 714 is contained in Part 7.

Amendments

5. In general the publication is amended by replacing pages, but where only a minor alteration or deletion is necessary instructions for a manuscript amendment are given.

6. Throughout the publication a marginal line indicates that the subject matter against the line has been altered or added on the date quoted in the top corner of the page (see para.15).

7. Replacement pages not incorporating technical changes have to be issued on occasion and may include re-numbered or repositioned paragraphs. An additional heading "(Re-issued on .....)" is then included and the heading "Amended on ....." is adjusted to the most recent amendment appearing on that page. Thus a marginal line should always be associated with the shoulder heading "Amended on .....".

8. Where a complete chapter is issued for the first time, marginal lines are not employed and the shoulder heading on each page is "Issued on....." but a note is given on the title page indicating the origin of the requirements.

Record folder

9. Since design contracts are based on requirements current at the date of the specification, it is useful to

AP 970 Design Requirements for Aeroplanes AL25-37 19460801 OCR.pdf

retain a record of the requirements which have been superseded so far as new types are concerned, but which still apply to existing contracts.

10. For this purpose it is recommended that a separate record folder+ should be kept for filing the pages removed from this publication by amendment action. In amendment instructions the statement "Remove and file" means that the sheets should be filed in the separate folder. For index and similar sheets the instruction will normally be "Remove and destroy" since these are not needed for record.

11. The record folder can be divided by cards, similar to those in this publication, each division corresponding to an amendment list and date. The sheets removed by an amendment list can then be placed in the appropriate division.

12. It is recommended that the amendment instruction sheets be kept at the beginning of the folder arranged in numerical order.

Use of record folder

13. The method of using the record folder may be summarised as:-

> To find an earlier edition of a given paragraph, examine the pages removed from the publication by the amendment list quoted on the existing page containing that paragraph.

14. The record folder may be used to determine whether a requirement in the up-to-date publication was in existence at some past date or to consult requirements which were applicable at that date.

15. The amendment certificate in the front of this publication gives the date of each amendment list and this, in conjunction with the A.L. numbers quoted on each page, serves to indicate when any requirement was issued or amended. (This cross reference is unnecessary in the case of pages issued or replaced by A.L.35 or subsequent Amendment Lists since the operative date appears on all such pages).

16. Two examples of finding whether a paragraph now in the publication, was current in, say, December 1940 will illustrate the method:-

(i) Shoulder heading on page containing the paragraph is, say, "Amended by A.L.No.12", but no marginal line against paragraph in question. In the record folder, in the pages removed from the publication

---

+ Not supplied by M.A.P.

by A.L.No.12, will be the page which was superseded. This is headed "Amended by A.L.No.5". Therefore the paragraph was current in December 1940.

(ii) Shoulder heading on page containing the paragraph, is, say, "Amended by A.L.No.11" but no marginal line against paragraph in question. In record folder, in the pages removed from the publication by A.L.No.11 will be the page which was superseded. This is headed "Amended by A.L.No.9" with a marginal line against the paragraph under investigation. Thus the requirement has been changed since December 1940. Examination of the pages removed by A.L.No.9 will indicate the change that was made.

17. If the shoulder heading on a page is "Issued on ....." the record folder will only give earlier requirements if the note on the chapter title page indicates that the subject matter was previously in another chapter of this publication.

External references

18. Reference to A.P.970 in correspondence should quote the chapter number, paragraph number and the amendment list number on the shoulder heading.

Suggestions

19. Any suggestions for inclusion of additional information, improvement of indexing or other matters in connection with this publication should be sent to:-

The Secretary, (R.D.T.2 d),
Ministry of Aircraft Production,
Millbank, S.W.1.

AP 970 Design Requirements for Aeroplanes AL 25-37 19460801 UCR.pdf Page 7

INTRODUCTION

Scope of Publication

1. The requirements given in this Publication apply to all Ministry of Supply Contracts for new designs of aeroplanes, and are intended to amplify the requirements given in Aeroplane Specifications. In the event of any conflict between the requirements of an Aeroplane Specification and those given in this Publication, the requirements given in the Aeroplane Specification take precedence. Where new requirements are promulgated for the first time between the issue of a Prototype Specification and the placing of a Production Contract, compliance is required only if called for in the Production Specification.

2. The Publication includes within its scope any requirements which arise directly or indirectly from the operational functioning of Service aeroplanes. It covers the following main categories of requirements,-

(i) the comfort and safety of the crew, guidance being given in such matters as the placing of the controls and seats, the pilot's view and other allied matters,

(ii) basic considerations of design, strength and stiffness which are intended to ensure that the aeroplane can carry out its duties safely and without danger of structural failure,

(iii) design requirements in connection with the installation of engines, of fuel and oil systems, and of the various aeroplane services,

(iv) design requirements in connection with the important question of ensuring a reasonable service life for the aeroplane and reducing maintenance to the minimum, and

(v) requirements appertaining to flight tests to be carried out by the Contractor prior to delivery of a new type aeroplane to an Experimental Establishment.

3. The book is to be interpreted against the background of current aeronautical engineering knowledge. It does not aim at being a compendium of such knowledge, and is emphatically not a book of rules compliance with which would automatically give a safe and satisfactory aeroplane. The guiding principle in compiling the book has been to confine the contents to requirements which experience shows cannot be ignored without undue risk of loss of efficiency and which are likely to be overlooked on occasions if not put formally on record. All requirements are not, of course, of equal

importance. The designer has latitude in interpreting those of less importance and also those whose formulation has necessarily been based upon insufficient knowledge to justify their rigorous enforcement. These are indicated in the text by the words "should" or "may". Derogation from requirements introduced by "shall" or "must" (unless such requirements are obviously inapplicable) is not open to the designer without formal sanction in writing from the Director of Technical Development or his representative.

Principles of strength estimation

4. The definitions of "standard" and "typical" components given in Appendix 1 are fundamental to the strength requirements of the Publication and should be thoroughly understood.

5. All strength calculations are to be based upon the assumption that "standard" components and structures are used throughout the aeroplane.

6. Strength requirements are expressed in terms of specified conditions and/or loads together with an ultimate factor. The product of the specified loads and the ultimate factor gives the ultimate load; the product of these same specified loads and the proof factor gives the proof load. The proof factor is 75% of the ultimate factor unless otherwise stated.

7. It is required that the structure shall not collapse before the ultimate load is reached. Unless specifically excepted it is also required that the structure shall remain airworthy (i.e. without appreciable permanent deformation) during and after application of the proof load for a period of one minute.

8. Proof of compliance with the strength requirements will usually be based upon calculations, but when the type of construction is not amenable to strength calculations, or when there is reason to doubt the accuracy of such calculations as can be made, then the strength will be determined by mechanical tests. Prior official concurrence should be obtained for such tests, which should be carried out under approved conditions.

9. Mechanical tests will usually have to be made on "typical", not "standard", structures. Due allowance has therefore to be made for any departure from standard structure conditions whenever the manner of failure is such that the appropriate corrections for dimensional and material tolerances can be made. If such correction is impracticable, it will usually be necessary on test to realize factors 20 per cent greater than those specified. When there is doubt as to the practicability of making the appropriate corrections, the case should be referred to the Director, R.A.E. (S.M.E. Dept.), South Farnborough, Hants.

10. Any technically sound method is acceptable for estimating the strength of an airframe or component under the specified external loads.

Applicability of strength requirements

11. Many of the strength requirements given in this Publication are stated without specified reference to the particular components for which they may be expected to give critical loads. Unless otherwise specified, the loads corresponding to the various conditions specified should be traced through the structure far enough to ensure that the aeroplane has at least the specified factors throughout the whole structure. This does not, however, imply that the whole structure need be stressed for every specified condition; many of the stressing cases overlap, and when it can be shown that any particular case will not give critical loads it will be unnecessary to consider the case further.

Definitions

12. In Appendix 1 are given definitions of a number of terms which are used throughout the Publication, and these are recommended for general use. To avoid confusion, it is particularly important that alternative and undefined terms should be avoided in type records, strength calculations, and test reports submitted for official approval.

Reference sheets

13. At the end of each Chapter or (when the number of references is small) at the end of the Part, a reference sheet is included. These reference sheets consist in the main of a list of M.A.P. Publications which contain useful amplification or explanation of the requirements given in the Chapter or Part, or which - as in the case of Aircraft Design Memoranda - promulgate additional requirements of which the designer should be aware. In addition a few special N.A.C.A. publications are included.

14. These reference sheets are for the convenience of the user; they are not intended to become a bibliography of aeroplane design. In their preparation a large number of documents was considered and reference to many deliberately avoided owing to their controversial nature or when the subject matter was partly outmoded.

15. The mention of a document in a reference sheet does not in any way alter the standing of that document so far as contractual obligations are concerned. When compliance with the terms of a certain document is essential for the correct interpretation or application of the basic requirement, this is so stated within the chapter itself. The document may, however, be listed in the reference sheet also to make the latter more complete.

B.

PART 0

(8123) T14097/2692-500 1/44 M46506 C & P 752

ALPHABETICAL INDEX

A

	Chap.	Para.
Accelerated take-off ..	307	
Accelerating -		
Naval aeroplanes ..	102	18
Acceleration -		
Maximum normal, definition	App.1	1.1
Normal, definition ..	App.1	1.2
Accelerator trolley loads	307	20
Accessibility	700	5
Accumulators -	709	9
Minimum temperature ..	105	12
Protective treatment ..	801	34
Adjustment -		
Guns	712	
Mass balance weights ..	500	10
Pilot's head rest ..	102	27
Pilot's seat	103	6
	103	34
Rudder bar	103	7
Aerials -		
De-icing	714	10
Dipole	120	8
Loop	710	16
Strength and installation	710	1
Aerial wires, loads due to	710	9
Aerobatic manoeuvres -	601	5
Tests	908	7
Aerodynamic loads -		
Aerials	710	
Bomb doors	202	6
	713	41
Monoplane wings	App.3	
Panels	402	34
Struts	402	21
Tail units	App.5	
Aeroplane attitude -		
Bomb clearance	713	14
Aeroplane parts -		
Classification	App.1	5
Aileron -		
Control circuit - strength	207	2.7
Ground clearance ..	310	7
Interchangeability ..	806	20
Interconnecting circuit stiffness	505	4
Locking	100	4
Mass balance	500	
	501	2
	503	11
Reversal prevention ..	503	3
Stops	207	6.1
Strength	205	1
Strength - parking ..	311	24
- picketing ..	311	28
Surface deformation ..	200	8
Tail to wind case ..	311	20

	Chap.	Para.
Aileron (cont'd)		
Torsional stiffness ..	503	8
Trimmer control ..	103	33
Trimmer stop	207	6.2
Trimming	104	2
Aileron and rudder trimmers	601	8.9
- Tests	912	7.6
Air brakes -	601	9.6
Control	103	38
General	104	12
Tests	913	7.5
Undercarriage as ..	301	7.6
Air compressibility effects	200	3
Air conditions -		
Pressure cabin	718	18
Air cooled engines -		
Flight tests	1003	
Air filters	701	3.2
Airframe notices	400	11
Air intake-engine	105	24
Air intake-control	103	Tab.1
Airscrew - see Propeller		
Air space, oil tanks ..	704	8
Alighting gear -	301	2
Characteristics-lowering	601	3.3
-retraction	601	2.4
see - Undercarriage		
Alighting and take-off		
Nose wheel type under-carriages ..	305	
Seaplanes	306	
Tail wheel type under-carriages ..	304	
Allowance for air compressibility	200	3
Allowance for shrinkage -		
gluing	405	1.4
Alloy - light, castings ..	406	13
Aluminium alloy -		
Bending	405	3.3
Extrusions bending ..	405	3.4
Sheet and strip, standard	400	7
Strength schedules ..	401	
Ammunition, protection of	100	22
Anchorage -		
Accumulators	720	42
Equipment, for catapulting	307	16
Equipment, for crash landing	309	3
Anchor, float planes ..	302	19
Ancillary equipment ..	402	33
Angle of yaw	206	11
	601	8.3
Anti-spin parachute installations ..	716	1
Approach and landing -	601	3
Naval aeroplanes ..	102	13
Tests - landplanes ..	905	
seaplanes ..	906	
Approach under asymmetric power-tests ..	911	7.3

AP 970 Design Requirements for Aeroplanes AL25-37 19460801 OCR.pdf Page 13

	Chap.	Para.
Armament -		
Minimum compass distance	707	Sch.1
Armour	100	16
Armour, plate, compass interference	717	16
	717	Sch.2
Arrested landing	308	
Arrester gear -		
Avoidance of damage ..	727	8
Installation	727	
Maintenance	727	11
Arrester hook -		
Range of movement ..	727	6
Warning light	102	17
Arrester wire -		
Engagement	727	3
Arresting -		
Control knob, shape ..	103	39
Controls, naval	102	17
Deck	308	
Naval aeroplanes	102	16
Strength	308	
Arrow compressor - Flight tests	1004	4.1
Asbestos gloves	120	11
Astro-dome	103	52
	105	18
A.S.V. watching station ..	103	62
Asymmetric manoeuvres -	202	
Spinning	208	
Asymmetric power flight -		
Tail unit loads	206	13
Tests	911	
Atmospheric conditions, standard ..	App.6	
Attachment -		
Float undercarriage ..	302	5
Mass balance weights ..	500	11
Points for towing ..	310	11
	802	23
see also Anchorage		
Attitude lights	102	24
Automatic observer	700	12
Automatic pilot -		
Flight tests	1011	
Strength under	207	9.1
Auxiliary floats - retraction tests	904	7.4
Auxiliary floats and flaps -		
lowering tests	906	7.4
Auxiliary fuel tanks ..	703	111
Self-sealing	703	35
Auxiliary oil tanks	704	29
Auxiliary tanks -		
Fuel supply	703	40
Average airman -		
Standard physical characteristics ..	App.8	
Awnings	101	17
Axes	120	10

B

	Chap.	Para.
Baffle plates -		
Fuel tanks	703	23
Balancing tailplane load -		
Symmetric manoeuvres ..	201	5
	206	6
Baulked landing	601	3.4
Tests - landplanes ..	905	7.5
- seaplanes ..	906	7.5
B.A. screws	403	6
Beaching and launching tests	902	7.3
Beaching chassis	310	5
Bearings, prevention of ingress of sand ..	105	29
Bearing stress -		
Test piece	401	Fig.I
	401	Fig.II
	401	Fig.III
Belt, safety and harness	402	36
Bending -		
Sharp corners	405	3.5
Sheets and strips ..	405	3.3
Tubes	405	3.1
Bent tubes -		
as structural members	405	3.2
Beresford closet	100	34
Bilging	101	16
Binding, leather	404	4
Blackout, cabin	100	29
Blind flying	103	13
Blinds, sun	100	12
Boat seaplanes -		
Alighting and take-off	306	
Bolts -		
Protective treatment ..	801	
Size limitations ..	803	16
Use of small sizes ..	803	13
Bomb aimers -		
Station	103	46
Window - de-icing ..	103	46
	714	19
Window - strength of ..	725	3.2
Windscreen wiper ..	103	46
Bomb cell -		
Inspection panels ..	713	28
Lights	713	28
	722	22
Tanks	100	20
Torpedoes in	722	12
Bomb clearance angles ..	713	14
Bomb doors -		
Emergency operation ..	713	44
Operation	713	40
Strength	202	4
Time for operation ..	713	42

	Chap.	Para.
Bomb equipment -		
Carrier	713	9
	713	Tab.1
Dimensions	713	8
Ground clearance	310	8
	713	37
Hoisting	713	24
	713	Tab.11
Installation	713	
Jettison circuit ..	709	5.4
Jettisoning control ..	103	26
Manual release ..	713	19
Release circuit	709	5.4
Sights	713	35
Strength for catapulting	307	16
Trollies	713	27
	713	Tab.111
Water clearance	713	37
Bonding -		
Fuel tanks	703	45
General	711	
Power plants	701	4.1
Protective treatment, pipes	801	88
Book stowage	103	59
Boost gauges	719	2.6
Booster coils -		
Bonding of	711	67
General	701	20.1
Screening of	711	5
Bracing wires -		
General	402	10
Lugs for	404	3.1
Size limitations ..	403	2
Strength schedule ..	401	Tab.6
Brake flaps	205	23
Brakes -	104	12
Air	601	9.6
- tests	913	7.5
Air, control	103	38
Test of wheel	901	11
Wheel	301	8
Wheel, control	103	38
Braking during retraction	301	9.4
Brass -		
Castings	406	26
Protective treatment ..	801	41
Strength	401	Tab.3
Breakdown sizes	802	1
Break-out panels -		
Aerodynamic loads on ..	402	34
Ice formation	714	14
Break-up procedure, castings	406	8
Bridle towing, floatplane	302	17
Bronze -		
Castings	406	26
Protective treatment ..	801	41
Strength	401	Tab.3
B.T.H. compressors -		
Flight tests	1004	4.2
Bulkheads - fireproof ..	715	5
Buoyancy -	100	38
Float undercarriage ..	302	2
Buttons, leather	404	4

C

	Chap.	Para.
Cabin heating -		
Flight tests	1008	
Cabins -		
Headroom for pilots ..	103	8
Pressure	718	
	120	18
Stops for sliding roofs	103	12
Watertightness ..	1013	
Cables -		
Approved types ..	709	6.1
Conduits	709	6.2
Electrical - metal braided	711	6
Fire resistant ..	709	7.2
Protection from moisture	709	12
Tail parachute ..	716	3.2
Trailing	709	6.5
Camera, minimum temperature	105	12
Camera guns	120	13
Camouflage finish	120	9
Carbon monoxide contamination	1007	
Carburettors, de-icing ..	714	23.
Cards, compass deviation	717	31
Carrier -		
Bomb	713	9
	713	Tab.1
Torpedo	722	11
Cartridge, engine starting	102	29
Castoring -		
Nose and tail wheels ..	301	5
Tests	901	7.4
Castings -		
General	406	
Protective treatment	801	22
Radiological examination	406	3
Strength of materials	401	
Catapulting -		
Fuel vent	703	28
Naval aeroplanes ..	102	20
Oil gauging	704	36
Strength	307	
Ceiling, service, definition	App.1	3.1
Cements, approved for wood	405	1.2
Centre of gravity -		
Control surfaces ..	500	6
Datum marks	800	7
Stressing conditions	200	2
Centre of pressure position -		
Monoplane	App.3	
Tail Unit	App.5	
Centring of tail wheel ..	301	10.2
Centrispun castings ..	406	25

B

	Chap.	Para.
C.G. position -		
Average airman	(App.8	9
	(App.8	Fig1-2
Chain assemblies	402	44
Chains -		
Guards for	402	48
Non-magnetic	402	47
Chart-board - Naval ..	102	34
Chart table	103	57
Chord, definition	App.1	4.1
Length, definition ..	App.1	4.2
Chordwise load distribution -		
Monoplanes	200	9
Tailplanes and elevator	206	23
	App.5	
Circuit, electrical -		
Identification	709	15
Protection	709	4
Screening	711	5
Circuits -		
Bomb release	709	5.4
Breaks	709	5.6
Connections	709	5.2
Control	709	5.3
Diagrams	709	5.1
Circuit stiffness -		
Flaps	205	15
Clamps, bonding	711	45
Classification, aeroplane parts ..	App.1	5
Clearance angles, bomb ..	713	14
Clearance, ground and water -		
Bomb	713	37
Torpedo	722	34
Climb tests -		
C.O. contamination ..	1007	5
Fuel systems	1005	11
Closets	100	34
C.O. contamination	105	5
	1007	
Cock -		
Fuel	703	65
Labels	703	65
Oil	704	34
Cockpit -		
Contamination	105	5
	1007	
Covers	105	18
Heating	105	10
Hood jettisoning ..	100	41
Lighting	100	27
Coefficient, tail volume	App.1	10
Cold starting	704	14
Collars for H.T. steel pins	803	14
Communications, external	102	28
Compartment, watertight ..	302	3
Compass installation ..	717	
Components - classification	App.1	5

	Chap.	Para.
Components (cont'd) -		
Drainage	801	61
Exclusion of water ..	801	57
General	402	
Interchangeability ..	805	2
	806	11
Limiting dimensions ..	802	1
Repairs	804	
Replacement	805	
Slinging	802	12
Tests	700	18
Ventilation	800	2
Compressed air systems -		
Flight tests	1004	
Compressibility effects ..	200	3
Compressors, Flight tests ..	1004	
Conducting tyres	301	3.4
Conduits -		
Cables	709	6.2
Protection from moisture	709	12.2
Conduit wiring	711	50
Connections -		
Circuit	709	5.2
Electrical	709	6.6
Construction of wave profile	306	10
Container - tail parachute	716	3.3
Contamination -		
C.O.	1007	
Cockpit	105	5
	1007	
Oxygen system	721	20
Contents gauges -		
Fuel	703	72
Oil	704	16
Contra-rotating propellers	204	
Control circuits - initial rigging tension	207	2.3
Control - following engine failure	601	7
	911	7.1
Control friction, static ..	207	2.2
	207	Tab.1
Controllability -	104	
Control surface deformations	200	8
Control surface loads, main planes ..	205	
Control - surface tabs ..	500	15
- tail parachute ..	716	3.5
Control, trim and stability lateral and directional	601	8
- tests ..	912	
longitudinal	601	9
- tests ..	913	
Control - under asymmetric power ..	601	7
	911	7.2
Controls and control systems -		
Assembly	805	17
Auto-pilot	207	9
Bomb-aimer's controls ..	103	47
Cables	402	42
	711	50
Chain assemblies ..	402	44
Circuit stiffness ..	505	
Cold conditions ..	105	16

	Chap.	Para.
Controls and control systems (cont'd)		
Contraction	207	3
De-icing	714	7
Dual	103	41
	207	5
Efficiency	207	2.1
Engine	103	35
Flaps	103	31
Flutter	500	
General design	207	
Glider release	103	39
	723	6
Guards	120	2
	402	48
Knobs, shape	103	39
	105	16
Locking of	100	3
Lubrication	803	12
Maintenance	805	16
Nomenclature	103	27
Parking and picketing	100	1
	311	
Pilot's controls	103	26
Pilot's station	103	7
Power Plants	701	5.1
Protective treatment, cables	801	56
R.A.T.O.G.	726	11
Repairs	804	10
R.P. Switch	103	26
Rudder bar adjustment	103	7
Standard arrangement	103	26
Stiffness	505	
Stops for	207	6.1
Suitability for cold	105	16
Surface deformation	200	8
Surfaces, ground clearance	310	7
Surface tabs	500	15
Symmetry in cockpit	103	7
Tail to wind case	311	20
Temperature range	207	1.1
Throttle	103	35
Torpedo release	722	25
Trimming controls	103	33
Undercarriage	103	30
Vulnerability	207	10
Controls, flight tests		
Automatic, pilot	1011	
Engine controls	1010	1
Propeller feathering	1010	2
Coolant system -		
Flowmeters	705	10
Pressure test	705	13.1
Coolant tanks -		
Fire precautions	715	12
Coolant warning device	103	36
Cooling -		
Electrical equipment	709	14
Engine accessories	701	6.3
Engine	105	2
Liquid	705	
Oil	704	4
Power plants	701	6.1

	Chap.	Para.
Cooling systems, flight tests -		
Air cooled engines	1003	
Compressors	1004	
Liquid cooled engines	1002	
Corrections -		
Compass	717	28
Instrument	1000	18
Temperature	1000	25
Corrosion, prevention of	801	
Corrosion, power plants	701	7.1
Coupling, hydraulic pipes	707	11
Cover, dinghy stowage	720	29
Cover plates, floats	302	10
Covers -		
Dinghy stowage, strength	720	39
Engine	105	33
Sun	100	12
	101	17
Weatherproof	105	18
Cowl-gill control	103	35
Cowlings -		
Fasteners	404	2.1
Interchangeability	806	16
Power-plants	701	8.1
Protective treatment	801	22
Crash exits	100	6
	100	58
Crash landing	309	—
Crash proofing	100	20
	100	Tab.1
Crash stations -		
General	100	62
Marking	100	65
Strength	309	3
Crew -		
Clothing, heated	105	14
Protection for	100	18
Quarters, flying boats	101	10
Stations - general	103	
Stations - minimum temperatures	105	12
- ventilation	105	3
Criterion -		
Control circuit stiffness	505	2
Flexural stiffness - Elevator overhang	504	6
Torsional stiffness aileron	503	8
tail unit	504	
wing	503	4
Crossing of controls	805	18
Crowbars, stowage	120	10
Crutchpads, torpedo	722	17
Cylinders, oxygen	721	15
Dampers, shimmy	301	6

D

C

ALPHABETICAL INDEX (cont'd)
Issued on 1st Aug. 1946

	Chap.	Para.
Damping -		
Nose wheel type	305	4
Tail wheel type	304	15
Data sheets, interchangeability	806	8
Datum marks	800	7
Datum (interchangeability) -		
Point	806	7
Hinge	806	12
Deck, arresting	102	16
landing, ...	308	
undercarriage	308	2
Deck take-off	102	18
Definitions -		
Auxiliary hydraulic system	707	2
General	App.1	
Main hydraulic system ..	707	2
Defuelling, Naval aeroplanes	703	68
De-icing -		
Air intake	714	21
Fluids	714	4
General	105	19
Installations	714	
see also	103	25
	103	46
Delivery without full trials	1000	15
Demagnetising	405	9
De-oiling, Naval aeroplanes	704	36
Desert equipment	105	30
Desert operation	105	22
Design diving speed ..	App.1	9.1
Design of oil tanks ..	704	16
Destruction of aeroplanes	120	3
Detail design, general ..	400	
Detail fittings -		
Control circuits ..	207	3.2
General	700	3
Detection, flaw	405	10.1
Deterioration -		
Precautions against ..	801	
Deviation compass	717	22
Differential contraction ..	207	3
Dilution, oil	704	14,17
Dimensioning, drawings ..	806	7
Dimensions -		
Average airman	(App.8	5
	(App.8	Fig.1
Dimensions, limiting -		
General	802	1
Naval aeroplanes	102	3
Dinghy installations ..	720	
Dinghy stowage, strength ..	720	39
Dipstick, oil..	704	33
Direction of towing	802	21
Directional and lateral trim,		
stability and control ..	601	8
- tests	912	
Direct vision openings ..	103	21
	103	56
Discharger signal	120	6
Disposition of non-structural		
loads in wings	501	5
Distance, minimum, compass ..	717	11
Distributed mass balance ..	503	11
Distribution of load,		
monoplanes	200	9
Ditching -		
Bomb aimer's window ..	725	3.2
Stations	100	62
Strength	309	
Dive -	104	12
Brakes	205	24
Limiting airspeed ..	908	7.2
Pull out	204	14
Recovery flaps	200	5
Diving speed, definition ..	App.1	9.1
Dome -		
Astro	103	52
Covers	105	18
Doors -		
Aerodynamic loads ..	402	34
Bomb	713	40
Entrance, landplanes ..	100	6
flying boats ..	101	1
Ice formation	714	14
Tail turret	100	57
Doped surfaces	711	51
Down gust	203	
Drainage -		
Components	801	61
Dinghy compartment ..	720	27
Fuel tanks	703	68
Oil tanks	704	30
	704	36
Test, wooden components	801	95
Drain plug, float		
undercarriage ..	302	4
Draught exclusion	105	15
Drawings -		
Castings	406	9
Datum	806	7
Information required ..	405	8.1
	405	9.1
Limits	806	4
D.R. compass installation ..	717	2
Drift landing, seaplanes ..	306	13
Drop tanks	100	20
	703	110
Fuel supply	703	40
Strength	703	30
Drop test, undercarriages ..	304	7
	304	11
Dual control -		
General	103	41
Strength	207	5
Duplication -		
Bracing wires	402	14
Instrument operation ..	103	14
Undercarriage operation	301	7.7
Dust and sandproofing ..	105	22

E

	Chap.	Para.
Earth return - wiring ..	709	2.6
Earth system	711	12
Economisers, oxygen ..	100	32
	721	9
Effect of fuselage -		
Load distribution ..	200	10
Electrical -		
Apparatus - protection from moisture ..	709	12.4
Bonding and screening ..	711	
Cables - compass interference	717	17
Controls, protection ..	100	25
Equipment, accessibility	709	8.1
cooling ..	709	14
fire precautions	709	13
positioning	709	8.2
vulnerability	709	11
Heating points	105	14
Installation	709	
Undercarriage indicators	103	15
	301	7.9
Electrically conducting tyres	301	3.4
Electric starting, engine ..	100	11
Electro-magnetic flaw detection ..	405	10.1
Elevator -		
Control	104	5
- landing	601	3.1
- take-off	601	2.1
Control circuit stiffness	504	18
Control circuit strength	207	2.7
Flutter	502	5
Ground clearance ..	310	7
Load distribution ..	206	23
	App.5	
Locking	100	4
Mass balancing	500	
	502	5
Overhang stiffness ..	504	6
Stiffness	504	4
Stops	207	6.1
Strength, parking ..	311	26
Strength, picketing ..	311	28
Surface deformation ..	200	8
Tail to wind case ..	311	20
Trim control	103	33
Trimming tabs, mass balancing	500	18
Elevator trimmer	601	9.5
- tests	913	7.4
Elsan closet	100	34
Emergency -		
Dinghies, installation	720	
Equipment, desert ..	105	30
Lighting	719	3.6
Packs	720	34
Emergency exits	100	40
Dinghy compartment in ..	720	6
Structural strength ..	309	3
Emergency landing	100	67
Emergency operation -		
Bomb doors	713	44
Engine cut-out	103	35
Undercarriages	301	7.7
End fittings, control cable	402	42
Energy -		
Absorption, nose wheel type undercarriage ..	305	9
tail wheel type undercarriage ..	304	4
Dissipation, nose wheel type undercarriage ..	305	13
tail wheel type undercarriage ..	304	14
Engine -		
Accessories, cooling ..	701	6.3
Air intakes	105	24
	701	3.1
and propeller loads ..	204	
Barring gear	100	11
	101	18
	701	15.8
Breather pipes	704	63
Controls	103	35
Covers	105	18
De-icing	714	21
Fuel system	703	
Hand turning gear ..	100	11
	101	18
	701	15.8
Installation, bonding ..	711	26
Installation, general ..	701	1
Liquid cooling system ..	705	
Mounting strength ..	204	
Oil system	704	
Power indicator	103	35
Protection	100	19
Replacement	805	10
Slinging	802	13
Starting	100	10
	102	29
	701	20.1
	704	14
Thermometer	701	22.1
Vibrations	701	23.1
Engine controls -		
Flight tests	1010	1
Engine failure - initial climb	601	7.1

D

	Chap.	Para.
Engine failure (cont'd) -		
level flight	601	7.2
on initial climb - tests	911	7.1.1
Engine flight tests -		
Air cooled	1003	
Liquid cooled	1002	
Engine warning light ..	103	36
Entrance doors	(100	6
	(101	1
Prevention of ingress of sand ..	105	26
Equipment -		
Anchorage strength ..	309	3
Bomb installation ..	(713	30
	(713	Tabs. IV & V.
Compass interference ..	717	11
De-icing	105	19
For flight tests ..	1000	9
General	700	7
Installation	700	3
Protection from moisture	709	12
Standard	700	7
Equivalent airspeed ..	App.1	9.2
Essential services	715	4
Exhaust -		
Flame damping	(100	30
	(100	Tab.II
Pipes, general	701	11.1
Pipes, bonding	711	40
Protective treatment ..	801	17
Systems, power plants ..	701	11.1
Exits, emergency	100	40
Minimum sizes	100	43
External bracing wires, lugs for ..	404	3.2
External communications ..	102	28
External connections, hydraulic ..	707	12
External fittings, floats	302	16
External lights -		
Safety devices	100	28
External undercarriage indicator light	102	25
Extinguishers, fire ..	100	13
Extrusions -		
Aluminium alloy - bending	405	3.4

F

	Chap.	Para.
Fabric covered components -		
Protection	801	32
Fabric covering	402	27
Factors, definition ..	App.1	6.1
Fairings, interchangeability	806	18
Fairleads, control	207	2
Fasteners, cowling	404	2.1
Feathering -		
Propeller	(701	17.1.
	(1010	2
Pump	704	37
Feel, control knobs ..	103	39
Filler caps -		
Coolant	705	11.1
Fuel	703	44
General	700	9
Oil	704	32
Fillers for bending tubes	405	3.1
Filling points -		
Bonding	711	41
Fuel	703	41
Oil	704	30
Filters -		
Air	701	3.2
Fuel	703	71
Oil	704	57
Fin -		
and rudder loads ..	206	
De-icing	714	5
Ground clearance ..	310	7
Torsional stiffness ..	504	8
Finish, camouflage	120	9
Fire access panel	715	35
Fire precautions -		
Applicability	715	1
Asbestos gloves	120	11
Bonding	711	2
Control of airflow ..	715	29
Crew	105	9
Electrical installations	709	13
Electrical equipment ..	709	13
Essential services ..	715	4
Extinguishing equipment	100	13
Fuel jettisoning ..	703	101
Fuel pipes	703	58
Fuel tanks	703	46
Fume seals	715	32
General	715	
Insulation	715	37
Intakes, draining vents exhausts ..	715	22
Protection, aeroplanes - fire ..	100	Tab.3
Protective treatment ..	801	22
Soldering	715	36
Ventilation of compartments	715	31

	Chap.	Para.
Fire precautions (cont'd) -		
Warning	100	13
Wing covering	715	11
Fire protection - inflammable liquids ..	715	12
pipes	715	17
Fireproof bulkheads ..	715	5
Oil tanks	704	23
Protective treatment ..	801	22
Fire resistance tests -	715	40
Cables	709	7.2
First aid outfits	120	19
Fittings -		
Bonding	711	
Floats	302	16
General	404	
Fixed guns -		
Fuselage	712	4
Wing	712	2
Flame damping -		
R.A.F.	100	30
	100	Tab.II
Naval	102	23
Flaps -		
Brake	205	23
Control	103	31
Decelerating	205	Tab.II
Dive bombing	205	Tab.II
Dive recovery	200	5
Gating	103	32
General	205	
Ground clearance ..	310	7
Oscillation, prevention of	501	7
Over-ride	104	5
Flaps and alighting gear -		
lowering	601	3.3
lowering tests	905	7.4
retraction	601	2.4
Flaps and auxiliary floats-		
lowering tests	906	7.4
Flattening of tubes ..	405	4.1
Flaw detection	405	10.1
Flexible pipes -		
Bonding	711	34
Fuel	703	50
Min. radius of bending	700	Tab.I
Oil	704	42
Flight at high speed - tests	908	
Flight at or near the stall - tests	907	
Flight conditions, normal acceleration ..	201	4
Flight tests -		
Asymmetric power	911	
Automatic observer ..	700	12
Cabin heating	1008	
Handling	Part 9	
Installations	Part 10	
Oil system	1006	
Static vents	728	4.1
Typical forms	App.7	
Watertightness	1013	3.2

	Chap.	Para.
Float seaplanes -		
Alighting and take-off	306	
Protective treatment ..	801	21
Floor loads	724	3
Flotation	100	38
Flow test -		
Fuel	703	87
Flowmeters, coolant ..	705	10
Flutter prevention -	Part 5	
Flying instruments (see Instruments)		
Flying qualities -	601	
Naval aeroplanes ..	102	13
Folding wings -		
General	102	4
Maintenance	803	4
Slinging	802	14
Strength	310	4
Foot holds	100	7
	703	41
	704	30
Forced landing	309	
Forgings - drawings ..	405	11
Forming	405	3.4
Freight carriage	724	
Friction in controls ..	207	2.2
	207	Tab.I
Fuel cock controls ..	103	37
	703	65
Fuel consumed meter ..	703	78
Fuel jettisoning -	703	91
Flight tests	1005	5
Fuel pipes -		
in flying boats ..	703	59
Fuel supply, interruption	703	40
Fuel system -		
Conditions of functioning	703	2
Flight tests	1005	
General	703	
Nomenclature	703	107
Pumps	703	60
Fuel tank capacity -		
Definition	703	47
Fuel tanks -		
Bonding	703	45
Disposition	501	5
Fire precautions ..	715	12
General	703	17
Installation	703	37
Pressure test	703	81
Production test pressure	703	86
Protection	100	20
	100	Tab.1
Water drainage	703	17
Fuselage -		
Bonding	711	
Bulkhead bracing wires	402	18
Check, shipboard repair	800	17
Crash landing	309	1
Emergency exit	100	40
Picketing points ..	311	13
Protection against ingress of sand	105	26

E

	Chap.	Para.
Fuselage (cont'd) -		
Protection from ice ..	714	12
Protective treatment ..	801	
Slinging	102	31
Stiffness	504	11
Weatherproofing	105	17
Fuselage effect -		
Load distribution ..	200	10
Fuses -		
Protection	100	25
Fusing -		
Engine electrical services	709	7.3

	Chap.	Para.
G		
Galley	101	13
Gallons gone fuel meter ..	703	78
Gating of flaps	103	32
Gauges -		
Fuel, contents	703	72
	703	117
Fuel pressure	703	79
Interchangeability ..	806	6
Oil pressure	704	64
General aero-elasticity requirements..	500	
General installation ..	700	
Generators, electric -		
Screening	711	5
Gills, cowl	103	35
	701	5.2
Glider release	103	39
	103	Tab.1
	723	6
Tests	723	12
Glider towing installation	723	2
Glued joints -		
General	405	1
Repairs	804	8
Gluing - allowance for shrinkage ..	405	1.4
Grain in fittings	404	5
Grease -		
Guns	803	10
Nipples	803	11
Ground clearance	310	6
Ground contact, electrical	711	19
Ground equipment, strength	402	33
Ground handling -		
General	802	6
Strength for	310	
Tests - landplanes ..	901	
Ground release -		
Glider towing	723	11
Ground tests -		
Tail parachutes	716	4.8
Watertightness	1013	3.1
Propeller feathering ..	1010	3
Guards -		
for control chains ..	402	48
General	120	2
Guides, sliding panels ..	725	2.4
Gun and gun turret installations -		
General	712	
Minimum temperature ..	105	12
Protective treatment ..	801	17
Gun bays -		
Protection against sand	105	28
Gun heating -		
Flight tests	1009	
Gun sight -		
Headroom	103	8
Windscreen as reflector	103	10
Gust loads	203	
Gyro instruments, minimum temperature	105	12
Gyroscopic couples -		
Propellers	204	8
H		
Hand holds	100	7
	703	41
	704	30
Handling -		
Flight tests	Part 9	
General flight test requirements ..	908	
Strength	310	
Handling trolley, floatplanes	302	16
Handrail, floatplanes ..	302	18
Hand turning gear	100	11
	101	18
	701	15.8
Harmonisation, guns ..	712	1
Harness, safety	102	26
	103	3
	309	3
	402	36
Headrest, pilot's	102	27
Headroom -		
General	103	1
Pilot	103	8
Heating -		
General	105	10
Gun, flight tests ..	1009	
Heat treatment	405	
Heywood compressor, flight tests.. ..	1004	4.2
High Mach number conditions	200	3
High speed dive recovery flaps	200	5
High speed flight - tests	908	
Hinges -		
Interchangeability ..	806	12
Piano	806	15
Hoisting -		
Bombs	713	22
Naval aeroplanes ..	102	30
	802	14
Holding down points ..	311	3

	Chap.	Para.
Hood -		
Blind flying	103	13
Jettisoning	100	41
Pilot's	103	8
	103	12
	402	49
Horizontal gusts	203	
Horn balance -		
Load distribution	206	27
	App.5	10
Hull -		
Bonding	711	
Protective treatment	801	21
Weatherproofing	105	17
Humidity - effect on controls	207	4
Hydraulic components -		
Fire precautions	715	12
Inflation pressures	707	3
Hydraulic installations -		
For desert operation	105	27
General	707	
Protective treatment	801	55
Hydraulic pipes -		
Protection	100	21
Hydraulic resistance -		
Oil system	704	13
I.C.A.N. atmospheric conditions	App.6	
Icing precautions	103	25
	103	46
	105	19
	714	
Identification labels - steel tubes	400	17
Identification markings -		
Control surfaces	500	7
Electrical installation	709	15
General	120	9
Idle cut-off, control	103	Tab.1
	703	70
Ignition circuits, bonding and screening	711	2
Ignition interference suppression	711	9
Ignition -		
Starting	701	20.1
Switches	103	35
Immersion switch	720	9
Indicators -		
Arresting gear	102	17
Landing gear	103	15
	301	7.9
Oxygen	721	21
Inflammable liquids - fire protection	715	12
Inflation, dinghy	720	3
C.O.2 cylinder	720	23
Inflation pressures -		
Hydraulic components	707	3
Pneumatic systems	803	17
Initial climb and take off	601	2
Initial climb - engine failure - tests	911	7.1.1
Injection carburettor	103	Tab.1,
	703	70
Inspection - Castings	406	3
Covers, floats	302	10
Datum marks	800	8
see also Maintenance		
Holes	801	67
Installations -	Part 7	
Arrester gear	727	
Bombing equipment	713	
Electrical	709	6.3
Flight tests	Part 10	
General requirements	700	
R.A.T.O.G.	726	
Instruments -		
Compass interference	717	Sch.4
Connection to static vent	728	3.3
De-icing	714	27
Emergency lighting	719	3.6
Engine power indicator	103	35
Flight tests -	1000	10
provision for	700	11
Installation	719	
Lighting	100	27
	719	3.1
Min. compass distance	717	Sch.4
Navigator's	103	55
Panels	719	2.1
Pilot's	103	14
Reading corrections	1000	18
Replacement	805	14
Instrumentation	700	12
Insulation resistance -		
Electrical wiring	709	16
Tests	709	16
Intakes, air, engine	105	24
Interchangeability -	806	
Components	805	2
Floats	302	8
General	800	18
Protective treatment	801	43
Intercommunication	103	49
	103	61
Interconnection, flaps	205	17
Interference -		
Compass	717	11
Electrical	711	2
Prevention	709	6.4
Suppressors	711	8

	Chap.	Para.
Interference suppression -		
Ignition	711	9
Radio	711	8
Wiring	709	6.4
Interior lighting	100	12
Interruption, fuel supply	703	40
Iron castings, strength ..	406	24
Isolation, fuel tanks ..	703	13

J

Jacking -		
General	802	9
Strength	310	3
Jettisoning -		
Control, bombs	103	26
Fuel	703	91
Pilot's hood	100 402 1012	41 49
R.A.T.O.G.	726	9
Tail parachute	716	3.4
Torpedoes	722	19
Joints -		
Control cables	402	43
Glued	405	1
Pipe lines	805	13
Repair of glued	804	8
Riveted	401	60
Transport	805	4

K

Knobs, control, shape of ..	103	39

L

Lamps, landing and taxying	100	26
Landing -	601	3
Arrested	308	
Brake propellers ..	103	38
Crash	309	
Deck	308	
Flaps, ...	205	
control, ...	103	31
gating, ...	103	32
Lamps	100	26
Naval aeroplanes ..	102	13
Overturning	309	
Seaplanes	306	
Speed, naval aeroplanes	102	13
Wheel up	100	67
Landing - baulked - test -		
landplanes ..	905	7.5
seaplanes ..	906	7.5
Landing brake propellers	103	38
Landing tests - landplanes	905	
- seaplanes	906	
Landplanes - approach and landing - tests	905	
Landplanes - ground handling - tests	901	
Landplanes - take off and initial climb - tests	903	
Land undercarriages -		
Lashing points ..	311	3
Lateral and directional trim - stability and control tests	601 912	8
Lateral stability - wing stiffness	503	1
Launching and beaching tests	902	7.3
Lavatory	100	34
Leading edge loads, tailplanes	206	25
Leads, bonding	711	42
Leather	404 801	4 52
Level speed - maximum ..	App.1	9.3
Light alloys -		
Castings	406	13
Protective treatment ..	801	
Strength schedule ..	401	Tab.2
Lighting -		
Chart table	103	58
Interior	100	12
Pilot's instruments ..	100 719	27 3.1
Limiting air speed dives	908	7.2
Limiting device, brake flaps	205	25
Limiting dimensions, components	802	1
Liquid cooled engines -		
Flight tests	1002	

	Chap.	Para.
Installation	705	
Pressure tests	705	13.1
Load distribution -		
Fuselage effect ..	200	10
Monoplane wings ..	200	9
	App.3	
Nacelle effect ..	200	14
Tail unit	App.5	
Wing deformation ..	200	15
Loading and C.G. conditions -		
Flight factors ..	200	2
Locking of nuts -	400	18
Standard "A"	400	20
Standard "B"	400	21
Locking of turnbuckles ..	400	23
Locknuts	403	3
Locks -		
Control surfaces ..	100	4
	311	29
Doors	100	6
Tail wheel	301	5.3
Undercarriages	301	7.8
Longitudinal stability on water -		
take off ..	601	2.3
landing ..	601	3.5
Longitudinal trim stability and control - ..	601	9
tests ..	913	
Loop aerials	710	16
Lowering of auxiliary floats and flaps - tests ..	906	7.4
Lowering undercarriage -		
Alighting gear and flaps	601	3.3
tests	905	7.4
Emergency	301	7.7
Normal	301	7.4
Low level indicator ..	103	
Oil pressure	103	36
Coolant	103	36
Low speed turns	907	7.4
Lubrication -	803	10
Control circuits ..	803	12
Luggage compartment -		
Pilot's	103	11
Lugs -		
Applicability	401	70
Holding down	311	18
Proof stresses	401	76
Stresses	401	71
	401	Fig.4
	401	Tab.20
Ultimate stress ..	401	75
Wires and tie rods ..	404	3

M

	Chap.	Para.
Mach number tests	908	7.3
Magnetic flaw detection	405	10
Magneto switches	711	36
Main plane control surface loads	205	
Main planes - see Wings		
Main supply feeders ..	709	3
Main wheel units, undercarriage ..	304	5
Maintenance	Part 8	
Manoeuvrability -		
General	104	
Manoeuvres -		
Aerobatic, tests	909	
Manoeuvring loads -		
Tailplane	201	7
	206	7
Margin, static	601	9.1
- tests	913	7.1.1
Marking -		
Controls	103	Tab.1
Crash stations	100	65
Fuel cock labels ..	703	65
Identification	120	9
Undercarriage legs ..	803	15
Marks, rigging	800	7
Mass balancing -		
Ailerons	501	2
	503	11
Elevator	502	5
Repairs	804	11
Rudder	502	2
Tabs	500	18
Master fuel cock	703	11
Master switch -		
External lights ..	100	28
Materials -		
Processes and working	405	
Standard	400	3
Strength schedules ..	401	
Maximum normal acceleration	App.1	1.1
Maximum speed, diving ..	App.1	9.1
Metal braided cables -		
Use of	711	6
Bonding	711	28
Meter, Fuel consumption ..	703	78
Methods of performance reduction ..	1000	23
Minimum distance from compass	717	11
Mixture control	103	35
Monoplane wing load distribution ..	200	9
	App.3	
Mooring station	101	2
- tests	902	7.2

	Chap.	Para.
Motors, electric, screening	711	5
Mounting -		
Engine, strength	204	
Guns	712	1
Transparent panels ..	725	14
Movement, freedom of ..	100	8

N

	Chap.	Para.
Nacelle effect -		
Load distribution ..	200	14
Nature of power supply ..	709	2
Naval aeroplanes -		
General requirements ..	102	1
Towing	802	21
Navigator's station	103	49
Night fighters -		
Stability	104	13
View	103	17
Night flying	100	26
	102	22
Nipples, lubrication.. ..	803	11
Noise	103	4
Nomenclature -		
Controls	103	27
Fuel system	703	107
Non-magnetic chains	402	47
Non-return valves	703	12
Non-structural loads in wings, disposition	501	5
Normal acceleration, definition	App.1	1.2
Nose form, aerodynamic, Interchangeability ..	806	18
Nose wheel -		
Castoring	301	5
Conducting tyres	301	3.4
Picketing point	311	7
Shimmy	301	6.3
Towing	310	12
Nose wheel type undercarriage -		
Alighting and take-off ..	305	
Nose wheel unit -		
Manoeuvring and rolling backwards ..	305	23
Performance..	305	7
Strength	305	19
Notices, airframe	400	11
Nut sizes, limitation ..	803	16

O

	Chap.	Para.
Oil - contents gauge ..	704	16
Oil cooler -		
Control	103	35
Mounting	704	4
Oil dilution	704	14
	704	17
Oil low pressure warning ..	103	36
Oil system -		
Flight tests	1006	
Oil tanks -	704	
Design	704	16
Fire precautions ..	715	12
Pressure test	704	70
Pressurising valves ..	704	62
Production test pressure	704	74
Protection of	100	20
	100	Tab.1.
Oleo inflation pressure	707	3
Operation, Desert ..	105	22
Operation mechanism, landing flaps	205	9
Operation in various climatic conditions ..	105	
Operational requirements - Flying boats	101	
Naval aeroplanes ..	102	
Oscillation - see Flutter		
Oscillatory stability ..	601	8.2
- tests ..	912	
Overload -		
Release, towbar ..	310	13
Relief, landing flaps	205	16
Take-off	304	2
20% on typical structure	Intro	9
	402	25
Override -		
Flap	104	5
Overturning	309	7
Oxygen -		
Installation	721	
Protection,		
bottles	100	24
pipes	100	21
System	100	31
Transport aeroplanes ..	120	18
Warning indicator ..	721	21

H

P

	Chap.	Para.
Packing sizes, maximum ..	802	1
Panels -		
Aerodynamic loads ..	402	34
Ice formation	714	14
Instruments	719	2.1
Sliding	725	2.4
Parachute -	100	36
Anti-spin installations	716	
Exits	100	46
Tail	716	
Troops	120	7
Parallel pins	404	1
Parking -		
Brake	301	4.5
Control loads	311	20
General	100	1
Parts -		
Classification	App.1	5
Standard	403	
Piano hinges	806	15
Picketing -		
and mooring	311	
Control loads	311	28
General	100	2
Holding down points ..	311	3
Naval aeroplanes	102	11
Strength tail to wind ..	311	28
Pilots -		
Controls	103	26
Head rest	102	27
Hood jettisoning	402	49
Interchange of duties ..	100	9
Luggage compartment ..	103	11
Opposed case	207	5
Station	103	6
View	103	17
Windscreen de-icing ..	103	25
	714	19
Pins -		
Collars for H.T.	803	14
Parallel	404	1
Protective treatment ..	801	17
Shearing and bearings of	401	50
	401	Tab.7
Single shear	401	38
Pipes -		
Bonding	711	34
Clips	703	54
	704	44
Engine breather ..	704	63
Exhaust	701	11.1
Fire protection ..	715	17
Fuel	703	49
Hydraulic	707	8
In flying boats ..	703	59
Oil	704	38
Oxygen	721	10
Protection	100	21
	100	Tab.1
Replacement of ..	805	11
Self sealing ..	703	35
Stainless steel, tests	704	75
Static and pitot ..	728	5.1
Vent	704	61
Pistol, signal	120	6
Pitching acceleration		
Symmetric manoeuvres	201	6
Pitching moment coefficient	201	11
Pitching moment due to		
sideslip	601	9.8
- tests	913	7.7
Pitot position error ..	728	2.
Pitot pressure source ..	728	
Planing bottom, seaplanes	306	2
Platforms -		
Aeroplane equipment	724	
Ground equipment ..	402	33
Plugs, float drainage ..	302	4
Plywood surfaces -		
Protection	801	30
Pneumatic systems, pressure	803	17
Portable oxygen set ..	100	33
Position error	728	2
Position of compass ..	717	3
Power plants -	701	
Power supply -		
approved system ..	709	2
P.R. aeroplanes - Stability	104	18
Pressure -		
Cabins	718	
Coolant system ..	705	12.1
Fuel supply	703	3
Fuel tank	703	81
Head - installation..	728	
Hydraulic		
relief	707	15
test	707	20
working	707	15
Liquid cooling ..	705	12.1
Oil tanks	704	70
Pneumatic system ..	803	17
Reducing valve ..	703	4
Refuelling	703	42
Pressure limiting device		
Cabins	718	8
Hydraulic	707	7
Pressure sources - ..		
Static, pitot ..	728	

	Chap.	Para.
Pressurisation - Transport aeroplanes ..	120	18
Pressurising valves - Oil tank ..	704	62
Prevention of flutter ..	Part 5	
Processes and working of materials ..	405	
Production tests -		
Pressure, fuel tanks ..	703	86
Hydraulic components	707	24
oil tanks ..	704	74
Proof factor	Intro	6
Proof load	Intro	13
Propeller -		
Control	103	28
Covers	105	18
De-icing	714	8
Engine loads	204	
Feathering	701	17.1
pipes	704	41
pump	704	37
test	1010	2
Fittings, power plants	701	18.1
Ground clearance ..	310	6
Protection -		
Electrical circuits ..	709	4
For crash landing ..	309	
From corrosion	801	
From enemy fire	100	15
From ice formation ..	105	20
	714	
From moisture - cable ..	709	12
From sand and dust ..	105	22
Fuel system	100	20
	703	35
Hydraulic pipes	100	21
Oxygen pipes	100	21
Radiator	705	7.1
Wooden components ..	801	29
Prototype tests	700	16
Provision for repair -		
General	804	
Mass balanced components	500	10
Pumps -		
Feathering	704	37
Fuel	703	6
	703	60
Hydraulic	707	4
Oil	704	38
Pylon structure, crash-landing	309	8
Pyrotechnics	100	23

Q

	Chap.	Para.
Qualitative handling - tests	914	
Quarter chord point ..	App.1	4.3

R

Radiator, protection ..	705	7.1
Radiator shutter control ..	103	35
Radio -		
Bonding and screening ..	711	
Compass interference ..	717	Sch.7
Earth system	711	12
Installation	710	
Interference	711	2
Interference suppressors	711	8
Radiological examination of castings ..	406	3
Raising speed -		
Flaps	205	10
Undercarriage	301	7.4
R.A.E. compressors -		
Flight tests	1004	4.1
Rate of roll -		
High speed	601	8.4
- tests	912	7.3
Low speed	601	8.5
- tests	912	7.4
Transport aeroplanes ..	202	16
Rate of rotation -		
Pull out dive	204	14
Spinning	208	4
Rear view, pilot's	103	17
Recognition lights	120	5
Recoil damping -		
Nose wheel type under-carriage ..	305	14
Tail wheel type under - carriage ..	304	15
Recovery standard - spinning	208	6
Refuelling -	100	68
Flying boats	101	15
Pressure	703	42
Regulators, oxygen	721	5
Re-inforcing tanks	703	12
Relative densities, atmospheric ..	App.6	
Relative pressures, atmospheric ..	App.6	

	Chap.	Para.
Release control, glider ..	723	6
Relief pressure, hydraulic	707	15
Remote pumps, fuel ..	703	7
	703	60
Repairs -		
Fuselage check ..	800	17
General	804	
Mass balanced components	500	10
	804	11
Replacement of components	805	
Reports -		
Flight tests	900	7.3
	1000	26
Report forms -		
Flight tests	App.7	
Reserve factor	App.1	6.1
Resistance tests - insulation	709	16
Resonance tests	500	23
Rest station	103	60
Retractable -		
Landing lamps	100	26
Undercarriage	301	
Retraction of alighting gear and flaps	601	2.4
Retraction of auxiliary floats - tests	904	7.4
Retraction of undercarriage - tests	903	7.4
Reversal speed	503	3
Ribs, mainplane, strength	402	23
Rigging datum marks ..	800	7
Rigging tension, control circuits ..	207	2.3
Rig tests -		
Oil system	704	69
Riveted joints	401	60
	401	Fig.1
A.S.156	401	Tab.8
A.S.157	401	Tab.9
A.S.164	401	Tab.10
A.S.165	401	Tab.11
A.S.2227	401	Tab.12
Riveting, repairs	804	6
Rocket assisted take-off	102	19
Rocket assisted take-off gear -		
Installation	726	
Strength	307	10
Rocket -		
Thrust	307	24
Rods, tie -		
Lugs for	404	4
Strength schedule ..	401	Tab.6
Roll - rate of		
high speed	601	8.4
- tests	912	7.3
low speed	601	8.5
- tests	912	7.4
Rolling -		
Aileron angle for ..	202	14
Strength for	202	11
Rolling velocity - rate of growth ..	601	8.6
Rotation rate, spinning ..	204	12
	208	4
Routine maintenance ..	803	
R.P. firing switch	103	26
Rubber, in fuel system ..	703	56
Rubbing strip, floats ..	302	11
Rudder -		
Bar, adjustment	103	7
Bar, toe straps	103	40
Control	104	7
landing	601	2.1
take-off	601	2.2
and fin loads ..	206	
Control circuit	207	2.8
Float	302	13
Flutter, prevention ..	502	2
Locking	100	4
Stops	207	6.1
Strength for parking ..	311	27
Strength for picketing	311	28
Surface deformation ..	200	8
Tail to wind case ..	311	20
Torsional stiffness ..	504	9
Trim control	103	33
Rudder and aileron trimmers	601	8.9
- tests	912	7.6

S

Safety belt and harness ..	102	26
	103	3
	309	3
	402	36
Sandwich windscreens ..	725	2.3
Sanitation	100	34
Scavenge pressure	704	10
Screening and bonding ..	711	
Screws -		
B.A. use of	403	6
Protective treatment ..	801	17
Small sizes	803	13
Wood, minimum size ..	405	1.3
Seaplanes -		
Alighting and take-off	306	
Approach and landing tests	906	
Take off and initial climb tests ..	904	
Water handling tests ..	902	
Sea rescue equipment ..	720	34

	Chap.	Para.
Season cracking, spinnings	405	5.1
Seats -		
Adjustment	103	6
	103	34
Catapulting loads ..	307	16
General	103	2
Navigator	103	54
Passenger - high speed flight	103	2
Pilot	103	6
Safety belt and harness	309	3
	102	26
Watching station ..	103	62
Seats and harness -		
Strength for flight ..	402	36
For crash landing ..	309	
Securing, Naval aeroplanes	102	11
Self-sealing - pipes	100	21
Tanks	100	20
.. .. ..	703	35
Service ceiling, definition	App.1	3.1
Servo-controls	207	10.2
Sextant-dome -		
Covers	105	18
Shackles, holding down ..	311	18
Sharp cornered sections - bending	405	3.5
Sheet and strip -		
Bending	405	3.3
Nominal thickness, acceptance	App.1	5.2
Strength schedules ..	401	
Use of sheet thinner than 22G ..	400	7
Shimmy -		
Dampers	301	6.1
Tests	901	7.5
Shipboard repair -		
Fuselage check ..	800	17
Shock absorption -		
Float undercarriage ..	302	6
Tests, land undercarriage	304	35
Shock stall	200	4
	200	16
Side load -		
Bomb doors	202	3
Wing tip floats ..	306	14
Sideslip	202	2
application of.. ..	601	8.3
pitching moment due to	601	9.8
- tests	913	7.7
Tests	912	7.2
Sights -		
Bomb	713	35
Torpedo	722	32
Signal, discharger ..	120	6
Signal pistol	120	6
Single pole wiring ..	709	2.6
Metal aeroplanes ..	709	2.7
Wooden aeroplanes ..	102	2.8

ALPHABETICAL INDEX (cont'd)
Issued on 1st Aug. 1946

	Chap.	Para.
Size -		
Limiting, Naval aeroplanes	102	3
Maximum for packing ...	802	1
Slats	205	29
Sliding panels	725	2.4
Slinging -		
General	802	12
Naval aeroplanes ..	102	30
Power plants	701	19.1
Single engine aeroplanes	802	20
Strength for	310	2
Slotted wings	205	29
Slow running cut-out control	103	Tab.1
Small bolts, use of ..	803	13
Soldering	405	6.1
Solder, soft -		
Fuel systems	703	57
Oil systems	704	48
Somersault landing -		
See overturning ..	309	7
Span, definition	App.1	8.1
Spanwise load distribution -		
Monoplane	200	9
Tailplanes	206	22
Spars -		
Lateral stability ..	402	22
Speed -		
Landing flap, lowering	205	
Landing flap, raising.	205	10
Of approach, Naval aeroplanes ..	102	13
Reversal	503	2
Undercarriage - lowering	301	7.4
- retraction	301	7.4
Spinning -	601	6
Fighters	104	14
Strength for	208	3
Tests	910	
Trainers	104	1
	104	16
Spinning and spin recovery	208	
Spinnings, materials ..	405	5.1
Spiral stability	601	8.1
Spools for catapulting ..	307	2
Spreading wings	102	4
Spring tabs -	207	7
Mass balance	500	18
Stiffness	500	22
Stability -		
Aeroplane	104	1
Landing run	301	2
Longitudinal - on water-landing	601	3.5
- take off	601	2.3
Night fighters	104	13
Oscillatory	601	8.2
P.R. aeroplanes.. ..	104	18
Spiral	601	8.1
Stability trim and control		
lateral and directional	601	8
- tests ..	912	
longitudinal	601	9
- tests	913	

J

	Chap.	Para.
Stainless steel pipes ..	703	51
	704	75
Stall - flight at and near - tests ..	907	
Stalling	601	4
Stalling speed definition	App.1	9.4
Standard -		
Component, definition	App.1	5.2
Hydraulic pipes ..	707	8
Hydraulic pressure ..	707	4
Instrument panels ..	719	2.2
Man	App.8	
Markings, controls ..	103	Tab.1
Materials	400	3
Parts	400	8
	403	
Physical characteristics of average airman ..	App.8	
Relative densities ..	App.6	
Temperatures	App.6	
Stand-by lighting ..	100	28
	719	3.6
Starting -		
Cold	704	14
Engine, general ..	100	10
Naval aeroplanes ..	102	29
Ignition	701	20.1
Static and pitot pressure sources	728	
Static castings	402	24
Static friction in control	207	2.2
	207	Tab.1
Static margin	601	9.1
- tests	913	7.11
Static position error ..	728	2
Static vents - installation	728	3
Stations -		
Crash	100	62
Crew	103	
Steel -		
Castings	406	24
Protective treatment..	801	15
Strength schedule ..	401	Tab.1
Stick force - out of trim flight - tests ..	913	7.21
Stick force per "g" - tests ..	913	7.12
Stiffness -		
Control circuit ..	505	
Elevator overhang ..	504	6
Fins	504	8
Flap circuit	205	15
Fuselage	504	11
General	Part 5	
Properties, determination	500	4
Rudders	504	9
Spring tabs	500	22
Tail unit and fuselage	504	
Trimming tabs	500	22
Stops -		
Aileron trimmer ..	207	6.2
Control surfaces ..	207	6.1
Landing flap	205	19
Sliding cabin roofs	103	12
Storage, handling and transport	802	
Stowage -		
Asbestos gloves ..	120	10
Dinghy	720	20
Firemen's axes ..	120	10
Publications	103	59
Strainers, oil	704	57
Streamline wires and tie rods -		
General	402	10
Sizes	403	2
Strength schedule ..	401	Tab.6
Strength -		
Accumulator anchorage	720	42
Brake flaps	205	26
Drop tanks	703	30
For freight carrying	724	2
Pins	401	50
R.A.T.O.G.	307	10
Riveted joints ..	401	60
Tail parachute ..	716	4.5
Transparent panels ..	725	3.1
Strength and design for flight	Part 2	
Strength calculations - principles of ..	Intro	4
Strength of materials ..	401	
Stresses - lugs	401	71
Strips and sheets - Bending of alum. alloy	405	3.3
Structural members - Bent tubes as ..	405	3.2
Structural stiffness - determination ..	500	4
Structures - Classification ..	App.1	5
Struts - Aerodynamic loading	402	21
Studs, leather	404	4
Sub-arctic atmospheric conditions..	App.6	
Sumps, fuel tanks ..	703	17
Sunblinds	100	12
Supercharger control ..	103	35
Suppression of -		
Ignition interference	711	8
Radio interference ..	711	8
Shimmy	301	6
Sweating	405	6.1
Swing at take-off ..	104	7
Swinging of compasses ..	717	22
Switch -		
Magneto	711	36
Mooring light ..	101	8
Swivelling - see - Castoring ..	301	5

	Chap.	Para.
Symmetric flight -		
Tail unit loads ..	206	5
Symmetric manoeuvres ..	201	
Symmetric tailplane loads	206	28

T

Table, navigators	103	57
Tabs, spring	207	7
Tail down case, landing ..	304	6
Tail parachute -	716	
Aeroplane strength ..	716	4.7
Basic requirements ..	716	2.1
Cable	716	3.2
Container	716	3.3
Control	716	3.5
Ground tests	716	4.8
Jettison	716	3.4
Jettison device - strength	716	4.6
Strength	716	4.5
Tailplane -		
Bracing wires	402	10
De-icing	714	5
Ground clearance ..	310	7
Load distribution ..	App.5	
Loads	206	
Prevention of flutter	502	
Stiffness	504	
Up load	206	9
Volume coefficient ..	App.1	10
Tail to wind case	311	20
Tail towing	310	12
Tail trolley	310	5
Tail unit and fuselage stiffness	504	
Tail unit loads	206	
Tail-up landing -		
Seaplanes	306	3
Tail wheel -		
Castoring	301	5
Conducting tyres ..	301	3.4
Locks	301	5.3
Picketing point	311	9
Shimmy prevention ..	301	6
Tail wheel type undercarriage -		
Alighting and take-off	304	
Tail wheel units, undercarriage	304	9
Take-off -		
Naval aeroplanes ..	102	18
Overload	304	2
Take-off (cont'd)		
Rocket assisted ..	307	10
Seaplanes	306	
Take-off and initial climb	601	2
Tests - landplanes ..	903	
Tank - - seaplanes ..	904	
Auxiliary, oil.. ..	704	29
Capacity, definition	703	47
Combat	703	110
De-icing	714	4
Fuel	703	17
Fuel, installation ..	703	36
Oil	704	17
Oil, installation ..	704	3
	704	24
Pressurising valves ..	704	62
Protective treatment	801	22
Self-sealing	100	20
	703	35
Target towing, provision for	102	33
	120	17
Taxying -		
Design for	301	2
Lamps	100	26
Tests	901	7.3
Temperatures -		
Cabin tests	1008	
Flight tests	1000	25
Minimum, general ..	105	12
Standard	App.6	
Templates, Interchangeability	806	6
Test instruments	700	11
Tests -		
Automatic observer ..	700	12
Bombing equipment ..	713	45
Bonding	711	52
Cabin heating	1008	
Compass interference	717	14
	717	32
Components	700	18
Contraction	207	3.2
Drainage	801	95
Fire resistance ..	715	40
Flight, handling ..	Part 9	
Flight, installation..	Part 10	
Fuel flow	703	87
Fuel tank	703	81
Glider towing installations	723	12
Hydraulic system ..	707	21
Liquid cooling system	705	13.1
Mainplane ribs ..	402	23
Oil system, rig ..	704	69
Oil tank	704	70
Pilot's hood jettison	402	49
	1012	
Power plants	701	21.1
Pressure cabin ..	718	22
Production, ...	700	17
fuel tanks	703	86
oil tanks	704	74
Prototype	700	16
Resonance	500	23

K

	Chap.	Para.
Tests (cont'd)		
Rig, oil system ..	704	69
Stainless steel pipes ..	704	75
Static vent	728	3
Torpedo	722	37
Transparent panels ..	725	3.3
20% overload on typical components	(Intro	9
	(402	25
Undercarriage	301	9.4
Shock absorption ..	304	35
Thermometers -		
Engine	701	22.1
Oil	704	66
Thermo-couple, engine ..	701	22.1
Throttle control	103	35
Thrust, rocket	307	24
Tie rods and wires -		
General	402	10
Lugs for	404	3
Size limitations ..	403	2
Strength schedule ..	401	Tab.6
Timber, strength schedule ..	401	Tab.4
Toe straps for rudder bars	103	40
Tolerances	806	
Torpedo equipment installation	722	
Torque -		
Contra rotating propellers	204	6
Torsional stiffness -		
Ailerons	503	8
Elevators	504	4
Fins	504	8
Fuselages	504	15
Rudders	504	9
Tailplane	504	2
Wings	503	4
Towbars, overload release ..	310	13
Towing -		
Bridle for floatplanes	302	17
Installation, glider ..	723	
Methods	802	23
Naval aeroplanes ..	102	32
Strength	310	10
Track, wheel	301	2
Trailing cables	709	6.5
Transparent panels	725	
Transport aeroplanes, rate of roll ..	202	16
Cabin pressure	120	18
Oxygen	120	18
Transport, handling and storage	802	
Transport joints - General	805	4
Transport, sizes for ..	802	2
Tricycle undercarriage, .. see Nose wheel type ..	305	
Trim, stability and control, lateral and directional	601	8
- tests ..	912	
longitudinal	601	9
- tests	913	
Trimmers -		
aileron and rudder ..	601	8.9
- tests	912	7.6
elevator	601	9.5
- tests	913	7.4
Trimming	104	2
Trimming tabs -		
Aileron stop	207	6.2
Control	103	33
Control marking.. ..	103	Tab.1
Flutter	500	15
Mass balanced	500	18
Setting, elevator ..	104	5
Stiffness..	500	17
Stops	207	6.1
Vulnerability	207	10.1
Trochoidal wave profile ..	306	10
Trolley -		
Boat seaplanes	310	5
Catapulting	307	3
Troops, parachute	120	7
Tropical summer conditions	App.6	2
Tubes -		
As structural members	405	3.2
Bending	405	3.1
Permissible bow ..	402	19
Protection	801	22
Thinner than 22G Dural	400	7
Working	405	
Tunnels, gun..	712	9
Turnbuckles	403	4
Locking	400	23
Turns, low speed - tests..	907	7.4
steady - tests ..	913	7.3
Turret -		
Covers	105	18
Electrical installation	709	10
Gun	712	11
Twin contact tyres ..	301	6.4
Two-wave landing, seaplanes	306	8
Typical component definition	App.1	5.3
20% overload on ..	(Intro	9
	(402	25
Typical structure, definition	App.1	5.3
Tyre size	301	3

U

	Chap.	Para.
Ultimate -		
Factor	Intro	6
Load	(Intro	6
	(App.1	7.2
Ultra-violet lighting ..	(100	27
	(719	3.2
Undercarriage -		
and flaps - lowering tests	905	7.4
As air brake	301	7.6
Castoring tests	901	7.4
Characteristics	301	2
Control	103	30
Deck landing	308	2
Energy absorption		
nose wheel type ..	305	9
tail wheel type ..	304	4
External light	102	25
Float - design	302	
- strength	306	
Land - design	301	
- strength	(304	
	(305	
- tests	301	10.1
Main wheel loads	304	17
Marking of legs	803	15
Lowering	301	7.3.2
Naval aeroplanes	(102	21
	(308	2
Nose wheel type, strength	305	
Overload take-off ..	304	2
Picketing points ..	311	5
Retraction speed ..	301	7.4
- tests	903	7.4
Shimmy tests	901	7.5
Tail wheel loads	304	27
Tail wheel type, strength	304	
Warning device	(103	15
	(301	7.9
Up gusts	203	
Upper emergency exits ..	100	59

V

	Chap.	Para.
Valves, non-return, fuel	703	12
Velocity of descent, vertical	304	4
Vent -		
Fuel tanks	703	27
Ice precautions	714	26
Liquid cooling systems..	705	3
Oil tanks	704	60
Pipes	704	61
Ventilation -		
Covered components ..	(800	2
	(801	68
Crew stations	105	3
Vertical gusts	203	
Vibrations -		
Aerial	710	15
Power plants	701	23.1
View -		
Bomb aimer	103	46
Navigator	103	56
Pilot	103	17
Visual indicators,		
undercarriage	(103	15
	(301	7.9
Volume coefficient, tail ..	App.1	10
Vulnerability -		
Control system	207	10
Electrical equipment ..	709	11
Trimmers	207	10.1

W

Warning devices -		
Arrester hook lights ..	102	17
Engine	103	36
External lights	100	28
Fuel	703	79
Oxygen	721	21
Pressure cabin	718	21
Undercarriage	(103	15
	(301	7.9
Water handling	306	17
Water handling tests - sea-		
planes	902	
Water rudder, floats ..	302	13
Watertight compartments, floats	302	3
Watertightness - ..	1013	
Flight test	1013	3.2
Ground test	1013	3.1
Wave profile	306	10
Weatherproof covers ..	105	18

	Chap.	Para.
Weatherproofing	105	17
Weights		
Average airman	(App.8	7
	(App.8	Tab.I
Wheel -		
Brakes	301	4
Brake control	103	37
Ice formation	714	25
Track	301	2.1
Tyre sizes	301	3
Wheel up landing	100	67
Window as emergency exits	100	45
Windscreen -		
Angle	103	9
Bomb aimers	103	46
De-icing	714	18
Gunsight reflector ..	103	10
Materials	725	1
Pilots	103	9
"Sandwich" type	(103	25
	(725	2.3
Strength and fitting ..	725	3.1
Wipers	(103	24
	(103	46
Wing -		
Aileron loads	202	11
Area, definition ..	App.1	11.1
Bonding	711	
Control surface loads ..	205	
De-icing	714	5
Disposition of non-structural loads ..	501	5
Engine and propeller loads	204	
Flutter	501	
Folding -		
General ..	102	4
Strength ..	310	4
Guns	712	2
Leading edge lamps ..	100	26
Lift and anti-lift wires	402	14
Load distribution -	200	
Biplanes	App.4	
Monoplanes	App.3	
Picketing points ..	311	11
Slotted	205	29
Spreading	102	4
Stiffness	503	
Symmetric manoeuvres	201	
Torsional stiffness	503	3
Tip floats, side load	306	14
Wing deformation -		
Effect on load distribution	200	15
Wing load, symmetric manoeuvres	201	5
Wipers, windscreen	(103	24
	(103	46
Wireless - (see also Radio)		
Aerials	710	
Bonding and screening ..	711	
Minimum temperature ..	105	12
Operator's station ..	103	48

	Chap.	Para.
Wires -		
Aerials, loads due to	710	9
Bracing	402	10
Lugs for	404	3
Size restrictions ..	403	2
Strength schedule ..	401	Tab.6
Wiring components, protection from moisture	709	12.3
Wooden components -		
Drainage tests	801	95
Protective treatment ..	801	29
Wrong assembly -		
Control circuit	805	17
Pipes	(703	52
	(704	50

Y

Yawed flight -		
Tail unit loads ..	206	10
Yawing angle	206	11

PART 1

OPERATIONAL REQUIREMENTS

(8123) T14097/2692 500 1/44 M46506 C & P 752

PART 1

Operational requirements

CONTENTS

Chapter 100	General operational requirements
Chapter 101	Operational requirements for flying boats
Chapter 102	Operational requirements for Naval aeroplanes
Chapter 103	Crew stations
Chapter 104	Controllability
Chapter 105	Operation in various climatic conditions
Chapter 120	Miscellaneous operational requirements

Note.- The operational requirements particular to an aeroplane type are laid down in Appendix "B" to the type specification. The requirements given in this Part are either generally applicable to all aeroplanes or are amplifications of brief requirements given in the Appendices "B". These requirements are therefore to be read in conjunction with the particular Appendix "B", which will take precedence in the event of conflict of requirements.

FS/17

CHAPTER 100

GENERAL OPERATIONAL REQUIREMENTS

Note.- The subject matter of this Chapter was previously contained in D.T.D. Specification 1028, A.D.M.478 and Chapters 4 and 14. New requirements have been added (Ref. Res/Pub/273).

A

CONTENTS

	Para.
Parking and picketing	1
Entrance	6
Freedom of movement	8
Engine starting	10
General lighting	12
Fire extinguishers	13
Protection -	
General	15
Crew	18
Engine	19
Fuel and oil tanks	20
Pipe lines and leads	21
Ammunition	22
Pyrotechnics	23
Oxygen	24
Fuses and electrical controls	25
Night flying -	
Landing lamps	26
Instrument lighting	27
Blackout	29
Flame damping	30
Oxygen	31
Sanitation	34
Parachutes	36
Flotation	38
Emergency exits -	
General	40
Size	43
Number	44
Windows	45
Parachute exits	46
Crash exits	58
Crash stations	62
Emergency landing	67
Refuelling	68

CHAPTER 100

GENERAL OPERATIONAL REQUIREMENTS

Parking and picketing

1. Provision shall be made on all aeroplanes for temporary parking (mooring in the case of flying boats) in winds up to 35 knots.

2. Provision shall also be made for picketing the aeroplane for long periods in all weathers, and in winds up to 80 knots.

3. For both parking and picketing, locking of all main flying controls is required and it is desirable that one system of locking should serve both purposes. For the purpose of picketing, holding down points shall be provided.

4. All locking devices shall be arranged so that the pilot cannot take off or attempt to take off so long as the elevator, rudder and aileron controls, or any one of these controls remains locked.

5. The locking devices shall be so arranged that, when not in use, they do not hamper the pilot in any way, and so that they cannot accidentally obstruct the use of the controls.

Entrance

6. The entrance doors on all multi-seater types, except flying boats, shall be jettisonable and shall, whenever possible, be constructed to open inwards. Doors which normally open inwards should, in the event of a crash landing, be capable of being opened outwards from the outside to facilitate rescue. Doors shall be provided with a positive catch operating from inside and outside the aeroplane. A safety catch, capable of operation both from inside and outside the aeroplane, shall be provided and shall be such as to obviate completely the possibility of the door accidentally opening during flight. Doors which can be reached from the ground without the aid of a ladder or similar appliance shall be provided with a lock to prevent entry by unauthorised persons. They shall be lockable only from the outside. The arrangement of the door and locks should minimise the possibility of jamming in a crash.

7. Hand and foot holds in airframes shall be designed so that any flap or similar device intended to prevent the ingress of dirt does not introduce the risk of grazing or jamming the hand or foot. The holds shall also avoid air leaks which would tend to reduce the cabin heating efficiency.

B

Freedom of movement

8. Free, easy and safe movement between crew stations is necessary on multi-seater aeroplanes, and it is particularly important that the crew shall have quick access to their respective emergency exits. Foot and/or hand holds or equivalent aids shall be provided to ensure easy movements within the aeroplane and to enable rapid exit by the emergency exits provided. Padding or guards shall be provided on any prominent structure or equipment which may cause injury or hamper the movement of the crew whilst at their stations or moving about the aeroplane.

9. Particular attention shall be paid to the ease of movement in to and out of the first pilot's seat where such an interchange is possible during flight.

Engine starting

10. A reliable and rapid means of starting the engines other from an external source, shall be provided. The arrangements shall ensure a satisfactory start under the coldest conditons, at which the aeroplane is required to operate. On all fighters and single engined aeroplanes the means provided shall be capable of starting each engine at least six times consecutively.

11. When electric starting is employed, plugs for coupling the starter to an external source of supply shall be fitted. For the purposes of maintenance, provision for the use of hand turning gear shall be made on each engine when the propeller cannot be conveniently reached from the ground (see Chapter 701).

General lighting

12. All interior portions of the aeroplane to which the crew have normal access during flight shall be adequately lighted by windows for day, and by electric light by night. Sunblinds shall be provided in all aeroplanes except single seat fighters.

Fire warning and extinguishing equipment

13. Fire warning and extinguishing equipment shall be provided in accordance with Table III of this chapter.

14. On all types of aeroplanes other than single seat fighters, hand extinguishers shall be provided to a total scale of one to each member of the crew, positioned at each normal crew station. In all metal skin aeroplanes one hand extinguisher shall be easily accessible from outside as well as inside the fuselage. It is desirable that this hand extinguisher be stowed together with or adjacent to the fireman's axe and asbestos gloves called for in Chapter 120.

Protection

15. General.- In the design stage full consideration should be given to the need for making the aeroplane and engine installations with all vital ancillary equipment, as invulnerable as possible to damage by enemy fire.

16. Where possible, armour should be incorporated in the aeroplane structure to save weight. Where not built into the structure, the armour should be built up in sections so that it is easily removable.

17. Protection against fire from astern is more important than from other directions, but for fighter aeroplanes protection from frontal attack is also required.

18. Crew.- Armour protection shall be provided for the crew at their normal stations against fire from astern. In the case of fighter aeroplanes, protection against fire from ahead, including bullet proof windscreen for the pilot, shall be provided as well as protection from astern.

19. Engine.- Protection of vital components of the engine installations, such as fuel pumps, carburettors, superchargers and coolant systems, shall be provided against fire from astern. Protection against fire from ahead as well as from astern shall be provided in the case of fighter aeroplanes.

C

20. Fuel and oil tanks.- Protection shall be provided on fuel and oil tanks in accordance with the requirements of Table I of this chapter. Approved processes shall be employed for self-sealing or crash-proofing. Fuel tanks installed in bomb cells shall be "drop tanks" (see Chapter 703).

21. Pipe lines.- Fuel and oil pipe lines shall be protected in accordance with the requirements of Table I of this chapter. Approved processes shall be employed for self-sealing. Hydraulic and oxygen pipe lines shall be positioned as widely apart as possible.

22. Ammunition.- Protection shall be provided for the nose of explosive shells, and when the ammunition is stowed in a tank the cartridge element ammunition shall also be protected. The direction of fire to be assumed will be stated in the Aeroplane Specification.

23. Pyrotechnics.- Pyrotechnics should be positioned so as to receive as much protection as possible from armour installed for other purposes. If existing armour cannot protect photographic flashes when carried, special removable armour shall be provided. Pyrotechnic stowages should be so arranged that the parachute flares are screened by the more inert flame floats and sea markers.

24. Oxygen.- Oxygen bottles and economisers should be positioned so as to receive protection from the structure or armour installed for other purposes. The bottles must be restrained from "jumping", when hit, by suitably re-inforced mountings.

25. Fuses and electrical controls.- Protection shall be provided for any centralized group of fuses or controls. The fuses, however, shall be dispersed wherever possible, to decrease vulnerability (see Chapter 709).

Night flying

26. (i) Taxying lamps.- Taxying lamps shall be provided on all R.A.F. aeroplanes, except fighters and elementary trainers, and shall be such as to illuminate clearly any obstruction to the passage of the aeroplane at a distance of four lengths of the aeroplane ahead, and at any point from dead ahead to one span outside each wing tip. All R.A.F. night fighters shall have provision for such lamps to be fitted at a later date, if required.

(ii) Landing lamps.- Landing lamps shall not be fitted into the leading edge. Ice forming on the leading edge would

Night flying (cont'd)

tend to absorb the light and distort the beam, also the leading edge should be free for barrage cutters and de-icers when required. Therefore landing lamps should be of a retractable type installed underneath the wing.

27. Instrument lighting.- Ultra-violet lighting or red flood-lighting shall be employed for the illumination of instruments and shall be arranged to avoid reflections from the windscreen or objects in the cockpit. The intensity of such lighting in the cockpit shall be under the control of the pilot. Emergency lighting for use in the event of failure of the aeroplane electrical supply shall be provided.

28. External lighting circuits.- On all aeroplanes required to operate at night, with the exception of Naval types, the external lighting circuits shall be controllable by a single master switch. A single warning light readily visible to the pilot shall be incorporated and shall function when any of the following lights are on,-

(i) navigation lights,
(ii) resin lights,
(iii) upward and downward identification lights,
(iv) downward coloured identification lights,
(v) landing lights, or
(vi) formation keeping lights.

29. Blackout.- Blackout curtains at windows and screening of the lights shall be provided on multi-seater aeroplanes, to ensure that at night no light shall be visible beyond a distance of 100 yards.

30. Flame damping.- Suppression of exhaust flames and glow shall be effected in accordance with the requirements of Table II of this Chapter.

Oxygen

31. The oxygen system shall be arranged for charging "in situ" when three or more cylinders are carried.

32. An economiser shall be installed at each normal crew station.

33. For all aeroplanes where oxygen is specified and the crew can change station during flight a portable oxygen set is required, stowed at each of the normal crew stations. One spare set, with stowage, per aeroplane shall be provided.

Chapter 100
Amended by A.L.No. 20

Sanitation

34. Whenever practicable an "Elsan" type closet shall be installed on all multi-seater aeroplanes or a "Beresford" type on flying boats, when the endurance is greater than 5 hours and the crew can change stations during flight.

35. On other aeroplanes having, at the most economical cruising speed, a maximum endurance greater than 5 hours, sanitary pipes and containers shall be installed accessible for use by all members of the crew. Venturi extractors are recommended for sanitary pipes.

Parachutes

36. In fighter aeroplanes seat type parachutes are required for the pilot and for any other member of the crew who does not change his position during an operational flight. If a member of the crew has to move about the aeroplane during operational flying, a stowage shall be provided for a lap type parachute.

37. In bomber and G.R. aeroplanes stowages shall be provided for lap type parachutes for all members of the crew. The stowages should be positioned near the respective emergency exits.

Flotation

38. It is not required that land-planes should float indefinitely after a landing on water, but sufficient time is required for the crew to launch and embark in the dinghy. Advantage should be taken of inherent buoyancy in the structure, and the object should be to achieve a horizontal floating attitude. Where holes are necessary for the passage of controls they must be kept small. When closed, all side and lower exits together with their attachment points shall be capable of withstanding water impact to at least the same degree as the surrounding structure. Underbody openings and hatches etc. should, as far as possible, be provided with locked covers capable of withstanding an upward surge of water.

39. Except on elementary and intermediate trainers, the design of the undersurface should be such that the danger of nosing over, when alighting on water, is minimised. Excrescences well forward are in particular to be avoided.

Emergency exits

40. General.- Provision must be made for the escape of all occupants of an aeroplane under the following conditions:-

(i) By parachute.
(ii) After the aeroplane has overturned on the ground (land-planes only).

Emergency exits (cont'd)

(iii) After an emergency landing or crash on water.

(iv) After a landing with the undercarriage retracted.

41. In the case of single seat fighter aeroplanes, a jettisonable coupé roof is required and will be accepted as fulfilling the above requirements. It must be possible to open this exit from the outside of the aeroplane, as well as from within, and the hood must be jettisonable from a closed, intermediate or fully open position. The jettison device shall be such that it is not necessary for the pilot to grip any part of the structure being jettisoned, to effect release.

42. On other aeroplanes the provisions made to comply with the above conditions will vary with the design of each aeroplane so that it is not possible to formulate any general rules. Some of the following paragraphs of this chapter set out recommendations which are based upon the experience gained in meeting requirements in a variety of different types of aeroplanes and upon information obtained as the result of accidents. While compliance with such recommendations is not obligatory when there are good reasons for non-compliance, any proposals which conflict with them shall be submitted to the "Mock-up" conference concerned, which will either accept the new proposals or indicate in what respect they are to be amended.

43. Size.- Each exit shall be of the largest practicable size, and shall in any case be such as to allow the free passage of a man in full flying kit, wearing the personal safety equipment appropriate to the aeroplane type. The absolute minimum size for any shape of exit shall be such as to give a freedom of passage equivalent to that provided by a rectangular opening measuring 24" x 24".

44. Number.- The number of exits required, for each of the conditions of para.40, is one for every three occupants of the aeroplane with a maximum of four exits for any one of the conditions. An exit may however be counted as meeting the requirements of each of the conditions of para.40, provided that it serves each purpose appropriately.

45. Windows.- Windows, if large enough, make suitable emergency exits. The window frame should be so fixed that it can be pushed outwards or pulled inwards, as a whole. Windows intended as emergency exits should be clearly marked, and they should be labelled with clear instructions as to how to open them.

46. Parachute exits.- The primary consideration for exit by parachute is that there must be the least possible risk of an occupant colliding with the tail structure or other parts of the aeroplane, no matter in what attitude the aeroplane may be when abandoned. Hence parachute exits should not in general be in cabin roofs because of the danger of the occupant colliding with mid-ships turrets or tail structure.

47. The parachute exits should be so placed that all occupants of the aeroplane have ready access to at least one of them.

E

Emergency exits (cont'd)

48. The sides of the exits should be smooth, and it is desirable that they should be several inches deep and that they should be sloped in the form of the sides of a truncated pyramid, i.e. funnel shaped, the sides converging towards the outside of the aeroplane.

49. There should be no projections, on which parachute harness or parts of clothing could be caught, in the region of the exit.

50. The floor is the best position in which to place a parachute exit. The second best arrangement is to use the doors in the sides of the cabin by which the occupants normally enter and leave the aeroplane. Entrances, when used as parachute exits, should be on both sides of the cabin, if possible, and must be well forward of the tail.

51. At least one of the parachute exits should be placed in the floor unless circumstances make this impracticable as in the case of single-seat fighters and boat seaplanes.

52. The door of a parachute exit in the floor of an aeroplane shall not be made to open outwards. It should be held in position by locks operated by a vertical movement of a handle which normally lies in a countersunk recess in the door. The handle shall be held in place by a simple and obvious safety catch. Doors in floors which are trodden on usually tend to set tight and the handle shall give a good leverage to overcome this resistance.

53. The doors of all exits, counted as parachute exits, should either be designed to pull away completely free from their seatings or be hinged to open inwards.

54. Each parachute exit should be labelled "PARACHUTE EXIT" in large letters, and simple instructions should be given for opening the exit, e.g. "TO OPEN, RELEASE CATCH AND PULL HANDLE". Arrows should indicate the catch and handle.

55. The fouling of a parachute exit by a blind flying hood or sunblinds shall be guarded against. One method whereby this may be achieved is to arrange that the opening of the exit automatically folds back the hood or blind out of the way.

56. On high speed aeroplanes, parachute exits should be provided with wind deflectors, whenever possible, to enable the crew to get away safely from the exit.

57. The door of tail turrets shall be capable of being opened when on the beam to facilitate the escape by parachute of the tail gunner.

58. Crash exits.- The primary considerations for exit after a crash, are that the exits shall be positioned to be

Emergency exits (cont'd)

available after the particular type of landings referred to in para.40(ii), (iii), or (iv). Means shall be provided to enable all such exits to be opened easily and quickly from both the inside and the outside of the aeroplane.

59. Means of exit shall be provided in the top of the cabin, and/or fuselage, for use after an emergency landing on water. All upper crash exits shall be as close as possible to the crash stations required by paras.62-66 inclusive and when the exits are high off the floor a ladder of rigid construction, capable of being anchored securely at top and bottom, shall be provided.

60. Any sliding covers classed as emergency exits must be jettisonable, without a sliding action. If the astro hatch is also an emergency exit, the astro dome shall be removable - by operation from inside the aeroplane-within 5 seconds.

61. It is desirable that all doors and emergency exits should have their edges chamfered so that distortion in a crash tends to force them open.

Crash stations

62. A crash station shall be provided on multi-seater aeroplanes for each member of the crew (except the pilot), to reduce the risk of injury in a crash landing or ditching. The need for this provision shall be considered when choosing and arranging crew stations and the arrangements made shall be demonstrated at the Mock-up Conference.

63. The essential requirements for a satisfactory crash or ditching station are;-

(i) that its occupant will not be thrown from his station when the aeroplane is rapidly decelerated,

(ii) that there shall be no likelihood of any items of equipment etc. breaking free and hitting the occupant, and

(iii) that the occupant shall be able to leave his station quickly and readily as soon as the impact is over.

64. Whenever possible the normal crew station itself shall be such as to provide every reasonable protection for that crew member in a crash landing or ditching. To this end, either the seating position should face aft, and be such as to give proper support and protection to the occupant in crash landing, or a harness which can be rapidly secured should be provided and should be of a design and strength appropriate to the seating position provided and the

F

expected loads in a crash. In either case there shall be no sharp corners, projections etc., against which the occupant might be thrown, except those inescapably associated with his operational duties. The hazards arising from these unavoidable projections should be minimised by padding so far as is practicable.

65. If the normal crew station cannot be made to provide a reasonable degree of protection then a separate crash and ditching station shall be provided for that crew member, and this should consist of a clear space at the rear of a suitable structure (e.g. a strong door, bulkhead or spar) large enough to enable the man to sit with his back and head against the structure. When such a provision is made the structure forming the support and, if practicable, the boundary of the clear space required at each crash station, shall be clearly marked by a blue line $1\frac{1}{2}$" wide.

66. A crash station which is intended to serve as a ditching station also shall not be in a position liable to receive a large in-rush of water. For this reason the aft end of the bomb cell is sometimes unsatisfactory.

Emergency landing

67. In all aeroplanes, so far as is possible without adverse effect upon performance, the design shall be such that in the event of a wheel up landing being made, the impact will be taken on an easily replaceable form of structure which in failing will minimise damage to the basic aeroplane structure. Under-fuselage bomb bays will be accepted as meeting this requirement.

Refuelling

68. RAF. fighter aeroplanes shall be capable of being refuelled at rates up to 120 gals/min. from a refuelling vehicle having four hoses each delivering at a rate of 30 gals/min.

TABLE I

PROTECTION OF FUEL AND OIL SYSTEMS+

Aeroplane Type	Fuel Tanks				Oil Tanks	Pipe lines
	Permanent	Auxiliary	Drop			
			Bomb Cell	External		
Operational	Self-sealing	Self-sealing	Self-sealing	No protection	Self-sealing ø	Self-sealing and positioning to receive maximum protection from the aeroplane structure against enemy fire.
Transport	Crash proof	Crash proof	-	-	Crash proof	No protection except for positioning to receive maximum protection from the aeroplane structure in the event of a crash.
Training (elementary and intermediate) and Target towing	Crash proof	Crash proof	-	-	No protection	As for Transport.

+ If a suitable type of protection having D.T.D. approval is not available, space provision shall be made to enable the approved type to be fitted when available.

ø Felt/Canvas covering to Specification No. D.T.D.1081 shall be provided until further notice.

AP 970 Design Requirements for Aeroplanes AL25-37 19460801 OCR.pdf

TABLE II

FLAME DAMPING REQUIREMENTS FOR R.A.F. AEROPLANES

Aeroplane type	Maximum distance for visibility.	Associated field of view.	Associated engine conditions.	Remarks
Single seat Night Fighters without A.I.	Lowest obtainable with a reduction of 5 m.p.h. on max. speed.	From Ahead Azimuth.- 180° beam to beam. Elevation.- 45° below to 90 above. horizontal.		Screening device shall be readily detachable.
Night Fighters with A.I.	100 yards.	From Ahead Azimuth.- 180 beam to beam. Elevation.- 45° below to 90° above horizontal.	Maximum weak mixture cruising speed.	Every precaution shall be taken to prevent flaming when throttles are closed suddenly.
	300 yards.	All other angles.		
Twin Engine Intruders, Fighter/Bombers, and Fighters without A.I.	300 yards.	Any angle.	All output conditions.	Readily detachable screening system desirable.
Bomber, Coastal and Military Transport,- 4 engined types	600 yards.	Any angle in the aft hemisphere.	Maximum weak mixture power.	
2 engined types	450 yards.			
Trainers and A.O.P.	300 yards.	Any angle.	All output conditions.	Readily detachable screening system desirable.

Chapter 100
Amended by A.L. No.33

I

TABLE III

FIRE PROTECTION+

Device	Relevant S.I.S.	Reciprocating engines	Turbine engines
Engine fire warning device	60 3752 3831	All types	All types
Fire extinguishers for all engine bays	60 3752	All multi-engined aeroplanes	All types
Fire extinguishers for all fuel and water/methanol tank compartments	62 3812	All multi-engined bombers and fighters	All bombers and fighters
Inert gas protection for all fuel and water/methanol tanks (other than drop tanks).		All bombers and fighters	All bombers and fighters

+ For general fire precautions see Chapter 715

A.L.36

AP 970 Design Requirements for Aeroplanes AL25-37 19460801 QGR.pdf Page 36

CHAPTER 101

OPERATIONAL REQUIREMENTS FOR FLYING BOATS

Note.- This chapter contains new general requirements (Ref: Res/Pub/273).

CONTENTS

	Para.
Entrance doors	1
Mooring station and equipment	2
Mooring light switches	8
Mooring quick release slip	9
Crew quarters	10
Galley	13
Refuelling	15
Bilging	16
Awnings	17

CHAPTER 101

OPERATIONAL REQUIREMENTS FOR FLYING BOATS

Entrance doors

1. Two entrance doors shall preferably be provided, one on the port side and one starboard. Suitable means shall be provided at the doors for mooring the dinghy when boarding the aeroplane.

Mooring station and equipment

2. Mooring hatches shall be so placed to prevent the ingress of water when mooring in rough weather, and should be of sufficient size to enable the bowman to handle anchors, boat hooks, and mooring lines, without difficulty.

3. Where large anchors are fitted an anchor davit or similar device shall be provided. A windlass, which should be power-driven on large aeroplanes, is required.

4. Studded link chain is preferable to the plain short link type for anchor chains, and should be used if available in the appropriate size. Dollied chain must be used.

5. It is important that water should not enter the boat when moored, and to prevent this, watertight stockings or other means should be employed on fair-leads for the anchor chain and mooring pendants.

6. Stowages for marine equipment should be arranged so that they do not interfere with the bomb-aimer's position.

7. Drogue stowages should be situated in the hull, and must be water tight and self draining to the outside of the hull.

Mooring light switches

8. Switches must be provided both internally and externally. The external switch is to be of such a design and so placed, that it can be operated easily from a dinghy coming alongside in bad weather, without the necessity of the dinghy tying up to the flying boat.

AP 970 Design Requirements for Aeroplanes AL25-37 19460801 OCR.pdf

Mooring quick release slip

~~9. To enable the engines to be run up at moorings, a quick release slip operable from the aeroplane, for attachment to the tail towing hook, is required.~~

Crew quarters

10. Separate living quarters are to be provided for officers and men. On large flying boats, capable of operating away from the base for long periods, particular care should be taken to obtain the maximum degree of comfort in the crew quarters.

11. Sleeping accommodation will be required for all members of the crew, and cupboard space and lockers for clothing and personal effects should be provided.

12. If an adequate source of electric power, other than the main engines and batteries, is available when the aeroplane is waterborne, provision should be made for heating the quarters and drying clothes by electric radiators. Electric fans and wind scoops should be provided for ventilation when the boat is operating under tropical conditions.

Galley

13. The galley must be well ventilated, and should preferably be situated between the officers' and crews' quarters.

14. Cooking facilities and stowages for crockery should be adequate for the number of the crew, and the stove shall be of sufficient size to enable substantial meals to be prepared.

Refuelling

15. Arrangements must be made to enable the aircraft to be refuelled independently of refuelling motor boats. When an A.P.U. is fitted this is to be used for refuelling, otherwise a manually operated refuelling pump shall be installed.

Bilging

16. A means of bilging both the hull and wing-tip floats is required. When an A.P.U. is fitted this should be used for bilging, otherwise a manually operated bilge pump shall be installed. If the manual pump for the wing tip floats is not

inside the hull it must be located in a position which is safe for the operator, and accessible in rough weather.

Awnings

17. External awnings are required for all transparent roofs, for use when the boat is moored in tropical conditions, to keep the interior of the aeroplane cool and to prevent deterioration of the transparent material.

Engine maintenance

18. Provision for the use of hand turning gear shall be made on each engine (see Chapter 701).

AP 970 Design Requirements for Aeroplanes AL25-37 19460801 OCR.pdf Page 61

CHAPTER 102

OPERATIONAL REQUIREMENTS FOR NAVAL AEROPLANES

Amended by A.L.No.28

CHAPTER 102

OPERATIONAL REQUIREMENTS FOR NAVAL AEROPLANES

General

1. Unless otherwise stated the requirements throughout this publication apply to both Naval and R.A.F. aeroplanes. The purpose of this Chapter is to state the main operational requirements which apply to Naval aeroplanes only, and to place in their right perspective, the other requirements of the publication with regard to their application to Naval types.

2. The role of any Naval type will be specified for the particular aeroplane in question.

Dimensions

3. Limiting dimensions, in addition to those given for the transport of packed components in Chapter 802, are laid down in the Standard Instruction Sheets and these shall not be exceeded without the written authority of M.A.P. Any special requirements will be given in the Aeroplane Specification.

Wing folding and spreading

4. When wing folding is required to meet the limiting dimensions or to facilitate stowage in the hangars, the folding or spreading of both wings shall be possible while the aeroplane is standing on deck in any wind speed up to 35 knots in the horizontal plane from any quarter and up to 45 knots from ahead.

5. Wing folding and spreading shall be power-operated under the control of the pilot and, normally, the operation shall be capable of being completed within 15 seconds.

6. An alternative method of operation shall be provided for use with the engine off and this method shall enable folding or spreading to be completed within 2 minutes.

7. Folding and spreading of the wings by hand shall be possible.

8. All necessary precautions shall be taken in the design to ensure that any operations involved in connection with wing folding and spreading can only be effective in their correct sequence. This is to prevent fouling of moving parts such as flaps and ailerons.

9. It shall be possible to fold and spread wings with drop tanks, guns, bombs and other armament stores in place. Guns shall be capable of being reloaded with wings folded or spread. It shall be possible to remove guns with wings folded.

10. It shall be possible to fold and spread the wings with any quantity of fuel in the tanks - including auxiliary and drop tanks when fitted - without consequent loss of fuel.

Securing

11. Deck.- On all Naval aeroplanes provision shall be made to enable the aeroplane to be secured on deck, with wings either folded or spread, in wind speeds up to 60 knots in the horizontal plane from any quarter. Loads resultant from angles of pitch and roll up to 10° and 30° respectively shall be considered to act in conjunction with the wind loads.

12. Hangars.- Provision shall be made for the securing of all Naval aeroplanes in aircraft carrier hangars (See S.I.S.386). Loads resultant from angles of pitch and roll up to 10° and 30° respectively shall be considered.

Approach and landing

13. The flying characteristics of the aeroplane should be such that it will be under full control during a deck landing approach at 85 knots without using more than two thirds engine power. Bombs or external drop tanks may be assumed to have been dropped. If the basic characteristics of the aeroplane preclude the meeting of this requirement in full, the minimum air speed at which it would be met should be submitted to the D.T.D.

14. The following qualities at low speeds - with flaps and undercarriage down - are desirable for deck landing and should be incorporated:-

(i) good fore-and-aft stability,

(ii) good longitudinal, lateral and directional control,

(iii) ease of throttle manipulation to avoid too rapid change of power with small throttle lever movements, and

(iv) adequate drag to ensure rapid deceleration and prevention of float on closing the throttle.

15. A good view for deck landings shall be provided.

16. Arresting.- All aeroplanes which are required to operate from aircraft carriers shall be fitted with arrester gear, design requirements for which are given in Chapter 308.

17. The controls for the arrester gear shall be in the pilot's cockpit. A green warning light shall be provided to indicate to the pilot when the hook is down (see S.I.S.2400). The light shall be arranged so that it does not shine in the pilot's face or unduly distract his attention during night landing.

Take-off

18. Accelerating.- All aeroplanes intended for operation from aircraft carrier decks shall be fully equipped for

B

accelerating by the tail down method. Of the two methods of take-off - unassisted and accelerated - the former shall be considered as the method for which the undercarriage should be primarily suitable.

19. Rocket assisted take-off.- All aeroplanes intended for operation from aircraft carriers shall be suitable for accelerating by the rocket assisted method, i.e. the necessary space and structural strength shall be provided in the initial design so that a rocket assisted take-off gear can be fitted when specially called for. The detailed requirements for the installation are given in Chapter 307 and Chapter 726.

20. Catapulting.- Aeroplanes which are required to operate from catapult ships shall be fully equipped and suitable for catapult launching as the normal method of take-off. Structural requirements for catapulting are given in Chapter 307.

Undercarriage suitability

21. The layout, strength, and general characteristics of the undercarriage shall be designed primarily for arrested deck landings on aircraft carriers and the geometry of the undercarriage shall be such that optimum efficiency is attained in this type of landing, at the expense, if necessary, of the ideal combination for airfield landings. The strength requirements are given in Chapter 304 and Chapter 308.

Night operation

22. The Aeroplane Specification will state when provision for night operation shall be made.

23. Flame damping.- If provision for night operation is called for, suppression of exhaust flames and glow shall be effected in accordance with the requirements at Table I of this chapter.

24. Attitude lights.- If provision for night operation is called for external lights coupled to the arrester hook shall be provided and shall be such that they will show the Deck Landing Control Officer whether the hook is properly down and will also indicate to him the attitude of the aeroplane. When provision for night operation is not called for, a single light coupled to the arrester hook, such that it will indicate to the D.L.C.O. whether the hook is properly down, shall be provided.

25. External undercarriage indicator.- To facilitate safe night operation all carrier borne aeroplanes shall be provided with a light which will operate only when both port and starboard main undercarriage units are locked in the "Down" position. This light shall be arranged to illuminate the starboard undercarriage unit and render it clearly visible to the D.L.C.O. during a landing approach. Precautions shall be taken to ensure that the light cannot be seen directly by the D.L.C.O.

Crew stations

26. Safety harness.- A safety harness shall be provided for each member of the crew. Its installation and the construction and layout of the seat and surrounding cockpit structure shall be such as to prevent injury to the crew during launching by catapult or accelerator, arrested landing, or running into the safety barrier. It shall also provide the necessary restraint for flight conditions.

27. Head rest.- A padded head rest shall be provided for each member of the crew facing forward, and shall be designed to give adequate support under all conditions of operation. The pilot's head rest shall be designed so that it can be positioned well forward for catapulting and yet go well back, (preferably by a quick return mechanism) during normal flight. With the head rest in the aft position the pilot's sideways movement for vision backwards shall not be restricted, and there shall be free passage for the pilot with parachute pack, dinghy etc., during an emergency exit.

External communications

28. On twin engined naval aeroplanes, the failure of any one engine shall not reduce the efficiency of those electrical services essential for continuous external communications.

Engine starting

29. The means provided for engine starting shall be self-contained in the aeroplane, i.e. completely independent of external power supply. When this requirement is met by cartridge starting an approved multi-breech type shall be incorporated. Cartridge starting is preferred.

Slinging

30. All Naval aeroplanes shall be readily capable of being hoisted with wings either folded or spread. For seaplanes and amphibians this requirement shall be met at full normal load; for other types, it is acceptable if the requirement is met without fuel, armament stores and ammunition.

31. Separate provision shall be made for the slinging of carrier borne aeroplanes - with main planes, tail planes, and fin removed - between the deep beams of aircraft carriers.

Towing

32. All naval aeroplanes shall have provision for being towed - by tractor or by hand - both forwards and backwards on the deck of an aircraft carrier as a routine manoeuvre. They shall also have provision for being towed forwards on airfields and dispersal tracks as a routine manoeuvre and backwards as an emergency manoeuvre. Detail requirements

C

are given in Chapter 802 and strength requirements in Chapter 310.

(Para.33 deleted)

Chart-board

34. A chart-board shall be fitted in the pilot's cockpit of all naval aeroplanes and the design shall be such that it can be easily stowed, or positioned for use, by a simple action. In the stowed, or closed, position the chart-board shall not obstruct the pilot in any of his duties. A drawer pulling out of the instrument panel is preferred as a means of meeting this requirement.

35. In the open position the chart-board should provide as big an area as possible, the minimum acceptable size being 14" x 16". Care shall be taken to position the chart-board so that it is possible to work on it without fouling the control column and to ensure that as few instruments as possible are blanked off from the pilot's view.

AP 970 Design Requirements for Aeroplanes AL25-37 19460801 OCR.pdf

TABLE I

FLAME DAMPING REQUIREMENTS FOR NAVAL AEROPLANES

Aeroplane type	Maximum distance for visibility	Associated field of view	Associated engine or flight conditions	Remarks
Day fighter	No restrictions.	Pilot must not be blinded the exhaust.		Any screening system should be readily detachable.
Night fighter	100 yards	From Ahead Azimuth - 180° beam to beam. Elevation - 45° below to 90° above horizontal.	Full throttle	Screening system should be readily detachable.
	300 yards	All other angles.		
Torpedo Bomber Reconnaissance	300 yards	From all angles astern.	Cruising and Diving	Screening system should be readily detachable.
	400 yards	From all angles ahead.		
Amphibian Bomber Reconnaissance	500 yards	All angles.	Cruising	

CHAPTER 103

CREW STATIONS

A

CONTENTS

	Para
General -	
Arrangement	1
Seats	2
Harness	3
Noise	4
Heating and ventilation	5
Pilot's station -	
Seating	6
Headroom	8
Windscreen	10
Sliding hood	12
Blind flying	13
Instruments	14
Indicators	15
Pilot's view -	
Extent of view	17
View downwards over nose	18
Formation flying	20
Direct vision	21
View in rain	24
View in icing conditions	25
Pilot's controls -	
Arrangement	26
Nomenclature	27
Propeller control	28
Undercarriage control	30
Flap control	31
Trimming controls	33
Seat adjustment	34
Engine controls	35
Engine power indicator	35
Engine warning light	36
Fuel cock control	37
Brakes	38
Wheel brake control	38
Air brakes	38
Landing brake propellers	38
Shape of control knobs	39
Rudder bar toe straps	40
Second pilot's station	41
Engineer's station	45
Bomb aimer's station	46
Wireless operator's station	48
Navigator's station -	
General	49
Location	51
Astro-dome	52
Seating	54
Instruments	55
View	56
Navigator's table	57
Illumination of table	58
Stowages	59
Rest station	60
Intercommunication	61
A.S.V. watching station	62

CHAPTER 103

CREW STATIONS

General

1. Arrangement.- The arrangement of crews' stations should provide the comfort, facilities, head-room and view necessary to enable them to carry out their various duties efficiently. The accommodation shall be such that fatigue is minimised, particularly on aeroplanes with a long endurance. Whenever possible, crew stations should be placed reasonably close together to assist mutual co-operation and morale.

2. Seats.- Comfortably upholstered seats shall be provided at all crew stations. The seats should be capable of taking the "K" type dinghy pack as an alternative to the seat cushion. Each member of the crew should have a seat which can be faced forwards and from which he can obtain a view of the horizon. Whenever possible on fighter aeroplanes, the initial design should allow for the introduction, to special order, of satisfactory accommodation for a passenger witnessing high speed manoeuvres, provided that such provision does not in any way adversely affect the efficiency of the type.

3. Harness.- Means of preventing each member of the crew from being thrown about during manoeuvres shall be provided. In catapulting types, provision must be made for the safety and convenience of the crew during launching. Both first and second pilots shall be provided with an approved type of harness.

4. Noise.- The noise level at crew stations shall be as low as possible, and in any case shall not exceed the level at which intercommunication will be satisfactory.

5. Heating and ventilation.- It is essential for the efficient performance of the crew's duties to ensure that each crew station is efficiently heated and ventilated. Detail requirements on heating are given in Chapter 105.

Pilot's Station

6. Seating.- The plane of symmetry of the pilot's seat shall be parallel to the plane of symmetry of the aeroplane. The pilot's seat shall be adjustable through a 4" vertical range.

Except on short range aeroplanes, i.e. elementary trainers and most single-seat fighters, the following shall be provided:-

(i) Movable arm rests.

(ii) Adjustable seat back (from the vertical to 15° backwards). B

Pilot's station (cont'd)

(iii) Comfortable footrests for use when the feet are not on the rudder bar.

7. Controls.- The cockpit main flying controls shall be symmetrical about the plane of symmetry of the pilot's seat as regards the location and movement of those parts to which the pilot's forces are normally applied. The rudder bar shall be adjustable through a 6" horizontal range.

8. Headroom.- The cabin roof or coupe shall provide a minimum headroom of $2\frac{1}{2}$" for the pilot when in his normal flying position. In fighter aeroplanes this minimum head room is required when the pilot is using his gunsight. There should be no rigid member immediately above the pilot's head in any position in which the cabin roof can be locked. The intention of this requirement is to ensure that if the pilot is thrown upwards in bumpy weather his head will not hit the hard frame member but the more resilient material of the hood.

9. Windscreen+.- The pilot's head must be close to the windscreen. For upright screen windows in front of the pilot and those forming the sides of a "V" screen, flat sheets of laminated glass should normally be used, but departures may be made with the concurrence of the D.T.D. Curved panels of approved moulded material or laminated glass may be used at the extreme corners of windscreens where the flat panel of a "V" is faired into the side of the fuselage. To avoid refraction, the front screen should make a large angle to the flight path.

10. On fighter aeroplanes bullet proof reflector windscreens complying with the requirements of Specification No. D.T.D/RDM.12. shall be installed to enable the use of the windscreen as a gunsight reflector. The angle of the windscreen shall be considered in relation to the gun sight so that the maximum efficiency is obtained from its use for this purpose.

11. Luggage compartment.- On all R.A.F. day fighter aeroplanes, a small luggage compartment shall be provided suitable for use by the pilot for the stowage of personal kit.ø

12. Sliding hood.- It should not be necessary for the pilot to raise his arm to operate the hood opening or locking devices and there must be no possibility of the pilot's arm being caught in the slip stream during opening or closing the hood when the aeroplane is travelling at high speeds. It

---

+The recommendations of R.A.E. report B.A.1426 should be considered.

øA suitable hold-all is being considered for issue as an embodiment loan item.

Pilot's station (cont'd)

must be possible for the hood to be opened or closed with ease while the aeroplane is travelling at any speed within its range. Any stops for holding the hood open must prevent the hood moving forward in a crash landing (see also Chapter 100).

13. Blind flying.- If a hood, screen or visor is required by the Aeroplane Specification for blind flying practice, it shall be fitted at the first pilot's station. The pupil shall have no view external to the cockpit and the instructor's view or ability to fly the aeroplane must not be impeded. When not in use it must not interfere in any way with the piloting from either position. The pupil shall be able to bring the device into action in flight and must be able to return it instantly to the stowed position. A means of inter-communication between the pupil and instructor is required.

14. Instruments.- A standard flying instrument panel shall be fitted with operation by an engine driven vacuum pump. In multi-engined types alternative operation shall be + obtained by the use of a second engine driven pump, so arranged that it will automatically assume its duties if the first pump fails. Means shall be provided to enable the operation of each pump to be tested independently.

15. Indicators.- Indicators shall be provided to warn the pilot, if he attempts to land, when retractable portions of the landing gear are not locked down. The landing gear shall include the main undercarriage, the nose wheel, the tail wheel, and the wing tip floats. The warning devices shall come into operation when the engines are throttled preparatory to landing and shall consist,-

(i) on all single seater aeroplanes (irrespective of the number of engines) and all single engined aeroplanes (irrespective of the number of seats):- of a flashing red light duplicated to guard against failure and installed close to the airspeed indicator, and

(ii) on all other aeroplanes:- of a visual indicator and an audible warning device - separately fused.

16. All visual indicators shall have dimming, mechanical or electrical, under the control of the pilot so that at night they do not impede his view. The indicators shall be so positioned or shielded that,-

(i) in bright sunlight the reflection does not give the impression that they are lighted, and

(ii) they do not cause reflections on the windscreen.

+ From J.A.C.Paper No.276.

C

Chapter 103
Amended by A.L.No.23
(Re-issued with A.L.No.34)

Pilot's view

17. Extent of view.- The pilot should be provided with the most extensive effective view possible. It should be remembered that at night curved panels do not give a good view, and avoidance of curved panels is particularly important for night fighters. Rear view may be obtained by means of "blisters" on the side of the fuselage and may be supplemented by the use of mirrors. The importance of view in various directions is set out below in order of priority for each class of aeroplane.

(i) Day fighters,-
(a) forward and upward,
(b) forward and downward,+
(c) sideways (port and starboard),+
(d) rearward.

(ii) Night fighters,-
(a) forward and upward,+
(b) forward and downward,+
(c) sideways (port and starboard),+
(d) upward and rearward.

(iii) Bombers, G.R. Landplanes, Flying Boats,-
(a) forward and downward,+
(b) sideways (port and starboard),+
(c) rearward and downward,
(d) rearward and upward,
(e) forward and upward.

18. View downwards over nose.- In general the view downwards over the nose should be as extensive as possible but shall not be less than 5° below the horizontal.

ø 19. On fixed gun fighters there shall be no visible obstruction throughout a cone having the following characteristics,-

(i) the major axis of the cone shall be parallel in the vertical sense to the gun barrel axis with gun adjusters in the mean position: and in a lateral sense, to the fore and aft datum of the aeroplane,

(ii) the major axis of the cone shall pass through the centre of the gunsight (fixed) graticule,

(iii) the apex of the cone shall be located at the pilot's eye when in the normal sighting position, and

(iv) the semi-angle of the cone shall be not less than 8° and preferably greater than 10°.

20. Formation flying.- Sideways view port and starboard within an arc of 45° above the horizontal is required from directly ahead to 90° on either side in all aeroplanes.

+ See para.21. ø S.B.34141

Pilot's view (cont'd)

21. Direct vision.- Draught proof direct vision openings (i.e. not through transparent material) shall be provided for approach and landing, and for use in bad visibility during flight. The openings shall be rainproof when open, and leakproof when closed. The view through these direct vision openings shall be as indicated by an asterisk in paras.17(i), (ii) and (iii). It shall be possible to open the panels against ice accretion. R.A.E. Reports No.B.A.1522 and No.B.A.1426 should be considered in this connection.

22. In aeroplanes with narrow windscreens the view required for approach and landing may be met by the provision of a sliding cabin top and sides or "openable" side windows which will give the pilot the required view by the movement of his head sideways. This will be acceptable if the width of the windscreen at the pilot's eye level does not exceed 24". If the windscreen is wider than 24" then the landing view shall be given by the direct vision panels and the side windows. The runners shall be so designed that they are not liable to ice-up or, if this cannot be done, a method of de-icing shall be incorporated.

23. The direct vision opening required for landing (see para.21) should provide angles of vision of at least the following.-

(i) R.A.F. types 10° starboard to 20° port.

(ii) Naval types 20° starboard to 20° port.

These shall be obtained with the pilot's head stationary. If, in order to obtain this view, movement of the pilot's body is necessary it shall not be such as to impair his control of the aeroplane.

24. View in rain.- All cabin type R.A.F. aeroplanes shall be provided with a wiper for the pilot's windscreen. When provision is made for two pilots seated side by side a wiper shall be provided for each windscreen. The installation of the wiper shall be such that it does not restrict the pilot's view.

25. View in icing conditions.- Spray de-icing shall be provided for the pilot's windscreen on all aeroplanes. The spray should be arranged to operate in conjunction with the wiper. A suitable guard shall be provided to prevent damage to the spray outlet pipe. Some means of preventing internal misting of the screen and cockpit hood in cold conditions shall be provided and on all Bomber and G.R. aeroplanes the pilot's windscreen shall be of the dry air "sandwich" type.

Pilot's controls

26. Arrangement.- The pilot's controls shall be arranged in a standard manner as follows,-

D

Controls for operation by the left hand.-

R.P. firing switch	to be fitted on the throttle lever on aeroplanes with stick or spade type control.
	to be fitted on the left hand side of the wheel on aeroplanes with wheel type control. Should a gun firing switch already be fitted to the left hand side of the wheel this should be moved to the more natural position on the right for operation by the right hand.

Controls for operation by the same hand that operates the throttle.-

Mixture
Automatic boost override
Multi-speed supercharger
Slow running cut-out
Propeller
Undercarriage (or wing tip floats) retraction
Flap selector
Elevator trimming tab
Rudder trimming tab
Aileron trimming tab
Air brake
Bomb switches,- Jettison ≠
- Firing #
Landing lamp
Arrester hook

Controls for operation by the other hand.-

Radiator
Cockpit heating
Hood operation
Seat adjustment
Wheel brake+
Reconnaissance flare release
Bomb doors
Bomb firing switch ø

Mock-ups of standard cockpit layouts are available for inspection at the Royal Aircraft Establishment. These standard mock-ups are intended only to indicate the relative positions of the various controls. The exact position will depend upon the layout of each particular aeroplane, and will be decided in the usual way at the aeroplane mock-up conference.

27. Nomenclature.- The nomenclature and markings shown in Table 1 shall be employed for designating the controls and their various positions. This standardisation of nomenclature in conjunction with standard layout is important to enable the pilots to be transferred from one type to another without too much change in cockpit drill being necessary.

+ But see para.37. Where brakes not power operated, control to be for throttle hand.
ø When fitted on control wheel.
≠ Or handle for remote control of jettison switches on selector switch boxes used with automatic bomb distributor.
When not fitted on control wheel.

Pilot's controls (cont'd)

28. Propeller control.- The propeller control shall be by means of a lever and not a hand-wheel, and shall be located as close to the throttle as convenient. The control shall operate in the same sense as the throttle, i.e. forward or uppermost to increase r.p.m. For two pitch propellers the forward or uppermost position shall correspond to fine pitch.

29. On multi-engined fighters and dive-bombers the propeller controls shall be "ganged".

30. Undercarriage control.- The undercarriage control shall consist of a single lever so arranged that it will operate in the same sense as the undercarriage, i.e. an upward movement of the lever shall cause the retraction of the undercarriage, and vice versa. A single movement of the lever shall be followed by automatic completion of the chosen operation.

31. Flap control.- The flap control shall consist of a single lever so arranged that the pilot can select and obtain any desired flap position by a single movement of this lever, the flaps following the lever movement at a speed just slow enough to avoid any handling difficulty due to change in drag or trim. The extent to which the lever is depressed shall control the extent of opening of the flap and vice versa.

32. A "gate" shall be incorporated so that the pilot may, by a single quick operation of the lever, and without watching any indicator, move the flaps to the "maximum lift position" from any other position.+

33. Trimming controls.ø- The trimmer controls shall be grouped and shall operate in the same sense as the flying controls arranged as follows,-

(i) Elevator.- The elevator trim control shall be operated by means of a vertical wheel with the axis athwartships, and placed such that about one third of a revolution is obtained with each purchase. On prototype aeroplanes the complete elevator trim range shall be covered with two to five turns of the control wheel, but on production aeroplanes the tab range may be reduced with corresponding reduction in the movement of the wheel. The average neutral setting for take-off shall be obtained from the pilot's recommendations (from the flight tests of the prototype at a range of different loadings) and with the tab in this position the trim control shall be set at zero in the cockpit. The following standard instruction can then be given.

"Trim control unit to be set at zero for take-off"

+ Override clause deleted.
ø Use of standard trim control wheels deleted. E

Pilot's controls (cont'd)

(ii) Rudder.- The rudder trim control shall be operated by means of horizontal wheel. The complete range of movement of the tabs must be covered by not more than five turns of the control wheel.

(iii) Aileron.- The aileron trim control shall be operated by means of a vertical wheel with axis fore and aft. The complete range of movement of the tabs must be covered by not more than five turns of the control wheel.

34. Seat adjustment.- The adjustment shall be by means of an irreversible mechanism. When a lever must be used this is not essential provided a balanced system is employed.

35. Engine controls.-

(i) In multi-engined aeroplanes the engine controls should be "ganged" as far as possible.

(ii) The forward position of the throttle control shall correspond to full throttle.

(iii) The rearward position of the mixture control shall correspond to rich mixture and some automatic means shall be incorporated to ensure that the mixture strength is suitably increased when the maximum boost for weak mixture cruising is exceeded.

(iv) The multi-speed supercharger control shall operate in the same sense as the throttle i.e. high speed supercharger position shall be forward.

(v) The cowl gills, radiator shutter and oil cooler shutter controls shall operate such that the "Open" position is at the forward or upper end of the quandrant. Where a wheel or crank control is used, a clockwise motion should close the control.

(vi) A means of switching off all engines simultaneously in an emergency shall be provided under the control of the pilot.

(vii) Engine power indicator.- On four engined transport aeroplanes a power indicator shall be provided for each engine.

36. Engine warning light.- A red light constituting an engine warning light shall be incorporated in each feathering button. This light shall be arranged so that while the emergency condition continues it will,-

(i) in the event of an engine fire, give continuous light until the fire is extinguished, when the light shall switch off automatically,

(ii) in the event of the oil pressure or coolant falling to a critical low level, give a flashing light or

(iii) in the event of engine power failure (on four-engined aeroplanes) give a flashing light except when the throttle lever is at any position in the range over which the undercarriage audible warning device sounds when the undercarriage is not locked down.

In all cases retraction of the throttle lever after the warning has been given shall not extinguish the light.

37. Fuel cock control.- Any fuel cock (in the cockpit) shall be operated by a lever or rod and not a handwheel. The control shall register in two positions only, "ON" and "OFF". (see Chapter 703).

38. Brakes.-

(i) Wheel brake control.- The wheel brake system shall be operated from a hand control on the pilot's control column except where power operated brakes cannot be fitted, and with differential operation from the rudder pedals.

(ii) Air brakes.- Air brakes shall be operated by a separate lever placed close to the throttle control. The forward position shall be the brake "off" condition.

(iii) Landing brake propellers.- The landing brake propeller shall be operated by the throttle lever. Reversal of propeller pitch shall be effected automatically by pulling the throttle lever through a gate. The design shall be such that increased braking effort is obtained by progressive backward movement of the throttle lever.

39. Shape of control knobs.- The knobs of the levers shall be of distinctive shape to assist "feel" as follows.-

(i) Undercarriage control to be a round knob with flattened sides representing a wheel.

(ii) Flap control to be a small round knob with a bar through it. This bar can be cylindrical for easy manufacture.

(iii) Propeller speed control to be a straight handle with corrugations similar to the steering wheel of a motor car.

(iv) Multi-speed supercharger control to be a square knob with a small radius at each corner.

(v) Arrestor hook control to be shaped as a hook.

(vi) Glider release control to be a yellow ball knob approx. 1.75" dia.

F

Pilot's controls (cont'd)

40. Rudder bar toe straps.- Toe straps are not normally required, but if fitted shall comply with S.I.S.46.

Second pilot's station

41. On aeroplanes with a second pilot's station, one of the following three may be required.-

(i) permanent dual controls,
(ii) temporary dual controls, or
(iii) a dual control conversion set.

42. The controls and instruments provided for the first pilot shall be duplicated at the second pilot's station, except for the controls which can be used and the instruments seen satisfactorily, by the second pilot. The seat and rudder bar at the second pilot's station shall be adjustable through the same ranges as for the first pilot's station. Dual control for the wheel brakes shall be provided.

43. Temporary dual controls, which are required on all bomber landplanes, should be arranged so that the captain of the aeroplane may take over the control when necessary. It shall be possible to fold them away when not in use so that no obstruction to free movement of the crew is caused. It should be possible to bring the second set into operation or fold it away, in less than a minute. If the use of permanent dual controls would not impede the free movement of the crew, they may be used in place of temporary dual controls.

44. Where a dual control conversion set is required it is essential that, when installed, the aeroplane may be controlled with equal facility from either station. In addition to a control column and rudder pedals the following shall be included in the conversion set.-

(i) Throttle and propeller controls, if the first pilot's controls cannot be operated by the second pilot.

(ii) Airspeed indicator, Altimeter, Turn indicator — if the first pilot's instruments cannot be read by the second pilot.

(iii) Instrument lighting,

(iv) intercommunication, if necessary

(v) a safety belt or harness.

The fixed fittings for the dual control conversion set shall not interfere in any way with the normal operational functions of the aeroplane and the time taken to install or remove the set shall not exceed ten man hours.

Engineer's station

45. (To be issued later)

Bomb aimer's station

46. The bomb aimer should preferably be in a seated position. Where this would involve undue difficulties in design, a prone position will be acceptable. A good view forward shall be provided for search, and also downward to at least 10° behind the vertical, to see the bombs bursting. The window through which the aimer obtains his sighting view shall be constructed of undivided laminated glass. A windscreen wiper together with spray de-icing shall be provided for this window.

47. The bomb aimer shall have control of selector switch boxes, nose and tail fusing selector switch boxes, press button firing switch, and automatic bomb distributor, except on Naval and G.R. aeroplanes for which these requirements will be given in the Aeroplane Specification. The release and fuse-setting controls shall be in a well lighted position where they are convenient for the bomb aimer's use. The push button firing switch should be placed so that the bomb aimer can reach it comfortably while using the bomb sight. If the firing switch is a loose item complete with lead and plug, a stowage should be provided.

Wireless operator's station

48. The wireless operator should be near the navigator and the station well lighted by day and the instruments and desk floodlighted for night-flying. It is particularly essential that the maximum amount of sound proofing and heating is provided. Owing to the fact that his duties do not involve movement or much physical effort, wireless operators are usually more prone to the effects of cold than other members of the crew.

Navigator's station

49. General.- The navigator should be able to perform all his duties, such as navigation, observation, operation of D.F.loop, taking drifts, bearings, sextant observation, and - when applicable - bomb aiming, without leaving his station or immediate vicinity. When there is no reasonable access between pilot and navigator, some means, in addition to inter-communication, shall be provided for the interchange of messages. It is important that consideration should be given to comfort, freedom of movement and protection from noise and draughts.

50. Intercommunication, electrically heated clothing and oxygen points, when fitted, should be installed in adjacent positions as follows:-

(i) In bomber aeroplanes accessible from either the navigator's or bomb-aimer's position.

(ii) In flying boats and G.R. aeroplanes such that the navigator can move freely to any part of his compartment.

Navigator's station (cont'd)

51. Location.- The navigator's station is best located as follows:-

(i) In bomber aeroplanes in the nose, immediately aft of the bombing position, in order that the bomb sight and arc of vision from the bomb-aimer's position may be used for navigation.

(ii) In flying boats and G.R. aeroplanes immediately aft of the pilot, where close communication with pilot and W.T. operator can be effected.

52. Astro-dome.- The dome is to be positioned in accordance with the following considerations:-

(i) On aeroplanes in which another crew member uses the dome to obtain sufficient rearward view, the dome should be close to, but not directly over, the navigator's seat.

(ii) On small aeroplanes where movement of the crew is restricted, or where a small enclosed navigator's compartment is employed, the dome should be immediately over the navigator's seat. This is the arrangement in general preferred for Bomber Command aeroplanes (subject to (i) above).

(iii) On large aeroplanes providing free movement for the crew and particularly on aeroplanes for Coastal Command, the dome should be situated close to but not directly over the navigator's seat.

53. In all cases the dome must be accessible from the navigator's seat without the necessity of disconnecting oxygen or intercommunication leads.

54. Seating.- The navigator's seat should be comfortable, rotatable, and have adequate back support. In addition, -

(i) where the dome is over the seat, the seat should be capable of sufficient vertical adjustment to allow sextant observations to be taken when seated.

(ii) in flying boats and G.R. aeroplanes the seat should be capable of easy stowage beneath the chart table when not in use, preferably by being swung, not slid on rails. When the chart table is large the seat should be capable of quick and easy height adjustment so that it can be located to provide comfortable support for the navigator when leaning over the chart table, or to serve as a normal seat for resting. Arm rests should be provided if this does not sacrifice ease of stowage beneath the table. Care should be taken that the seat is so

Navigator's station (cont'd)

positioned that sufficient space is left for other members of the crew to pass without disturbing the navigator when seated at the chart table.

55. Instruments.- The navigator's instruments, including drift sights and bearing devices, should be so located that the navigator can use them with the minimum effort. The instrument panel should be positioned as follows:-

(i) in bomber aeroplanes so that the instruments are readily seen from both the navigating and bomb-aiming positions, but ease of reading the instruments must not be sacrificed to render them visible from the bomb-aiming position.

(ii) in flying boats and G.R. aeroplanes immediately facing the navigator at the back of the chart table.

56. View.- (i) Bomber aeroplanes - A good all-round field of view in the lower hemisphere is required, especially forward from the navigator's seat. The arc of vision in the vertical plane should be from 30° above the horizontal forward through 140° to 20° behind the vertical, or as large a range as the fitting of a front turret will allow; in the horizontal plane the arc of vision should be from the longitudinal axis forward to 30° abaft the beam on either side, i.e. total range of 240°. If necessary additional downward view could be secured by the fitting of blisters. A direct vision panel is desirable to enable the navigator to obtain an uninterrupted view of the ground or sea, provided it can be achieved without loss of aeroplane performance, or of heat from inside the aeroplane.

(ii) Flying boats and G.R. aeroplanes - A good all-round field of view is required and in order to achieve this, there must be several large port holes or a large window on each, side of the aeroplane at the navigator's station. If necessary, additional downward view can be secured by the fitting of tear-drop blisters, or by a draught free direct vision opening with a deflector, in the navigator's windows.

57. Navigator's table.- It is essential that the table is rigid and, particularly when used in conjunction with an astrograph, must not deflect appreciably under reasonable loads. The size should be determined in relation to the following considerations:-

(i) Bomber aeroplanes - The navigator's table is to be as large as possible. In large aeroplanes a table 44" x 36" should be the aim. This is the size which will enable a chart to be opened fully. On small high speed bombers where cabin space has to be restricted to obtain performance, a smaller

Navigator's station (cont'd)

table will be acceptable, but 24" x 24" must be regarded as the absolute minimum. For such aeroplanes, however, it must be remembered that the high ground speed involves more rapid change of charts and the use of a small table imposes undue strain on the navigator and limits the operational efficiency of the aeroplane.

(ii) Flying boats and G.R. aeroplanes - The table should be rigid and substantially built in such a way that the navigator may work upon it comfortably, whether standing or sitting. The table should be as large as possible, and, if possible, have a minimum uninterrupted area of 44" x 32" after the fitting of the chart table plotter or other special equipment. There should be a drawer covering the same area and of 3" internal depth, immediately below the table top. The height of the table should be as near to 36" as the fitting of the astrograph will permit. In G.R. aeroplanes the size of the chart table will depend on the size of the aeroplane, but the above size should be the aim.

58. Illumination of table.- Illumination of the navigator's table should be by means of the standard angle-poise lamp. A second angle-poise lamp should be supplied for lighting of the navigator's instruments in preference to a multiplicity of separate lamps, provided sufficient illumination can be achieved in this way.

59. Stowages.- (i) Bomber aeroplanes - Stowages in the immediate vicinity of the navigator are required for sextant, navigation computor, and dividers, with a rack for retaining pencils. Stowage for $\frac{1}{4}$" maps, the Air Almanac, 4 volumes of the Astro-Navigation Tables, planisphere, navigation log and message pad should be placed so that they are readily accessible. Provision shall be made for a standard pattern, easily destructible, writing pad on the instrument panel.

(ii) Flying boats and G.R. aeroplanes - Stowages are required in the immediate vicinity of the table for computors, marine sextant and pencils etc. and for suspension of the sextant transit cases. Stowage for the Air Almanac and other publications should be provided in the immediate vicinity of the astrograph. An additional stowage, of approximately 12" x 12" x 8", is required for publications not in immediate use and this may be positioned in any convenient part of the aeroplane provided that it is accessible in flight.

Rest station

60. Whenever practicable on multi-seater long range aeroplanes a bunk is required where a member of the crew can rest and where a casualty could be accommodated.

Intercommunication

61. Intercommunication is required between all operational stations.

A.S.V. watching station

62. On all aeroplanes fitted with A.S.V. equipment an A.S.V. watching station shall be provided to enable the operator to view the indicator screen whilst seated.

63. The seat provided shall be comfortable and shall be adjustable for both height and distance from the indicator screen.

64. The station shall be provided with a curtain such that in full daylight the amount of light on the indicator screen can be reduced to a degree which will enable the operator to view the screen without the use of a visor.

65. A small efficiently shaded lamp shall be provided to illuminate the A.S.V. log.

TABLE 1

STANDARD MARKINGS FOR PILOTS' CONTROLS*

Control	Nomenclature	Marking	Remarks
Landing Flaps+	Flaps	"UP" - "DOWN"	At extremities of quadrant, if control has two fixed positions without intermediate adjustment.
		"RAISE" - "LOWER"	At extremities of quadrant, with arrows to indicate direction, if control provides continuously variable positions.
		"TAKE-OFF"	If take-off position provided.
		"NEUTRAL"	If a neutral position provided.
Undercarriage	Undercarriage	"UP" - "DOWN"	The sequence of operation for emergency lowering of the undercarriage should be described on a plate in the pilot's cockpit.
Elevator Trimmer	Elevator Trim	"NOSE UP"-"NOSE DOWN"	With arrows to indicate direction. The markings are to be on the trimmer box and not on the wheel.
Rudder Trimmer	Rudder Trim	"TURN LEFT" - "TURN RIGHT"	With arrows to indicate direction. The markings are to be on the trimmer box and not on the wheel.
Aileron Trimmer	Aileron Trim	"RAISE LEFT WING" - "RAISE RIGHT WING"	With arrows to indicate direction. The markings are to be on the trimmer box and not on the wheel. The words "RAISE LEFT WING" are to be on the left-hand side with the arrow pointing upwards. Corresponding arrangement is required for the words "RAISE RIGHT WING".
Throttle	Throttle	"OPEN" - "SHUT"	For plain throttle quadrant. "Open" corresponding to full throttle.
		"TAKE-OFF" "CLIMB" "CRUISING RICH" "CRUISING WEAK"	Only where gate provided at these positions.
Mixture Control$^{\phi}$	Mixture	"AUTO WEAK" - "AUTO RICH"	At extremities of quadrant, for automatic mixture control.
		"WEAK" - "RICH"	At extremities of quadrant with arrows to indicate direction for non-automatic mixture control.

+ Flaps other than normal landing flaps will need special markings.

ϕ Not suitable for Bendix carburettor which will need special markings.

* Previously A.D.M.536.

FS/19

TABLE I (cont'd)

STANDARD MARKINGS FOR PILOTS CONTROLS

Control	Nomenclature	Marking	Remarks
Two Speed Supercharger	Supercharger	"M" - "S"	
Propeller	Propeller	"INCREASE R.P.M." - "DECREASE R.P.M."	For constant speed propellers.
		"P.C.P."	Where a positive coarse pitch position is provided.
		"FINE" - "COARSE"	For two pitch propellers.
		"FEATHER"	For feathering control.
Cowl Gills	Gills	"OPEN" - "CLOSE"	At extremities of control with arrows to indicate direction.
		"OPEN"-"AUTO"-"CLOSE"	For thermostatic control.
Radiator Shutters	Radiator	"OPEN" - "CLOSE"	At extremities of control with arrows to indicate direction.
		"OPEN"-"AUTO"-"CLOSE"	For thermostatic control.
Oil Cooler	Oil Cooler	"OPEN" - "CLOSE"	At extremities of control, with arrows to indicate direction.
		"OPEN"-"AUTO"-"CLOSE"	For thermostatic control.
Hot and Cold Air Intake	Air Intake	"COLD" - "WARM"	
		"PULL WARM" - "PUSH COLD"	For push pull control.
Slow Running Cut-out	Slow Running Cut-out	"SLOW RUNNING CUT OUT - PULL"	
Main Fuel	Master Engine Cock	"ON" - "OFF"	See Chapter 703 for marking of other cocks.
Glider Release	Glider Release	"GLIDER RELEASE - PULL"	Markings to be on control knob.
Idling Cut-off	Idle Cut-off	"RUN" - "IDLE CUT-OFF"	When injection type carburettors are fitted.

CHAPTER 104

CONTROLLABILITY

Note:- The subject matter in this chapter was previously embodied in D.T.D.1028 with the exception of paras.2, 3 (part), 7, and 10 to 14 which are new requirements (Res/Pub/273).

FS/15

Amended by A.L.No.20

CHAPTER 104

CONTROLLABILITY

Manual control

1. The general requirements for flight under manual control are that the aeroplane, fully loaded should

(i) have positive stability about all three axes and be free from sustained periodic oscillations,

(ii) respond quickly to the controls and be fully controllable at any speed up to its maximum diving speed,

(iii) have adequate control at the stalling speed with flaps up or down, with no tendency to hunt,

(iv) be easy to manoeuvre and not tiring to fly,

(v) not experience excessive fluctuations in the speed for which it is trimmed to fly, if the throttle control be moved from the position for level flight to any other position,

(vi) not experience large changes of lateral and directional trim over the range of cruising and diving speeds,

+ (vii) preferably be unspinnable; training aeroplanes excepted (see paras. ~~15~~ 17 and 16).

Trimming

2. Trimming adjustments during flight should be possible about all three axes on all aeroplanes. The design should ensure that the changes in trim, which must be capable of correction with ease by the flying controls, due to the following causes are minimised.-

(i) Full operation of flaps.

(ii) Lowering and retracting the undercarriage.

(iii) Change in throttle position between the fully open and closed positions.

(iv) Release of bombs or torpedo.

(v) Normal movements of the crew.

+ from A.D.M.294.

(vi) Application of air brakes.

(vii) Opening and closing of bomb doors.

(viii) Consumption of fuel and ammunition.

(ix) Operation of gun turrets.

(x) Firing of guns.

3. The design of the lateral control system shall be such that operation of the ailerons will produce the minimum of adverse yawing effect on the aeroplane.

4. The tail plane shall be fixed as a rigid part of the fuselage structure, and the necessary trimming control to offset movements of the centre of gravity and centre of pressure shall be effected by movable tabs on the elevators. The range of adjustments shall be sufficient for coping with normal variations of flight conditions and the load carried, and the control shall be easy to operate throughout this range under all conditions of flight. Excess trimmer range beyond the requirement stipulated above should not be provided.

5. The elevator control should be light enough to permit the pilot to override any possible tab settings, for any normally occurring C.G. position, by direct use of the control column over the following speed ranges.-

(i) Flaps down: from flaps down stalling speed to a speed 30 m.p.h. higher than this.

(ii) Flaps up: from flaps up stalling speed to a speed 30 m.p.h. higher than this.

Multi-engined types

6. For multi-engined types the directional characteristics shall be such that a straight course can be maintained, without foot load, in the event of any one engine failing. It must be possible to turn in any direction.

7. Rudder control shall be capable of overcoming any tendency to swing during take-off with all engines delivering full power.

8. It is desirable that, if any engine fails during take-off, after unstick, it should be possible in terms of both climb and control, to continue the take-off on the other engine(s). For this purpose a rapidly operable rudder trimmer is acceptable. A preferable arrangement is, however, an automatic device which brings a servo into operation when the pilot's effort on the rudder pedals exceeds a value which cannot be maintained with ease.

9. If, owing to high wing loading or other reasons, it is not possible to continue the take-off climb, then it must be possible by use of the flying controls to maintain the aeroplane in full control during the descent to a forced landing, without throttling back the working engine(s).

Bomber and G.R. aeroplanes

10. The aeroplane shall form a steady platform for bomb aiming and for obtaining sextant observations. If not fitted with automatic controls the aeroplane should be capable of flying indefinitely "hand-off". For this purpose a friction device is permissible for holding the controls.

Fighter aeroplanes

11. The aeroplane should form a steady gun platform capable of being sighted and held on its target up to maximum speed without difficulty. The handling qualities should afford the pilot every possible aid during the take-off, and during the approach and landing. It is essential that the controls should be light, responsive and powerful, particularly in the rolling plane.

12. On all night fighter and torpedo fighter aeroplanes and on other types when called for in the Aeroplane Specification, air brakes or brake flaps shall be provided capable of,-

(i) decelerating the aeroplane rapidly at high speeds,
(ii) reducing the speed in a dive,
(iii) reducing the speed after a pull out from a fast dive down to the "engaging speed."

13. In night fighter aeroplanes, stability is of paramount importance and, if necessary, some sacrifice of manoeuvrability is acceptable to achieve stability.

14. Single seat fighters - single or twin engined - shall, if spinnable, be suitable for the practising of recovery from short spins (up to 2 turns) by service pilots.

Flying boats

15. The aeroplane should be capable of being taxied and manoeuvred in a 40 knot wind in any direction, and there should be no danger of its approaching take-off conditions in such circumstances. Sheltered waters may be assumed.

Trainers

16. Ab-initio training aeroplanes.- All ab-initio trainers shall enter into a spin in response to deliberate conventional pro-spin control movements and shall recover easily by the standard method from long spins (up to and including 8 turns).

17. Intermediate training aeroplanes.- All intermediate training aeroplanes shall be spinnable either in response to deliberate pro-spin control movements or by some established method of entry and shall recover easily by the standard method or some other defined method from long spins (up to and including 8 turns).

Photographic reconnaissance aeroplanes

18. On all P.R. aeroplanes it shall be possible to maintain steady level flight for long periods without fatigue to the pilot. The manual trim corrections, if any, needed to maintain this condition shall be reduced to the absolute minimum.

19. The aeroplane shall be able to fly straight and with wings level without concentration by the pilot, during photographic runs of up to 10 minutes duration.

C

CHAPTER 105

OPERATION IN VARIOUS CLIMATIC CONDITIONS

Amended by A.L.No.15

CHAPTER 105

OPERATION IN VARIOUS CLIMATIC CONDITIONS

General

1. Unless specifically stated otherwise in the operational requirements for the particular type, all aeroplanes must be fully suitable for permament operation in any part of the world. Provision shall therefore be made for the aeroplane, its equipment and crew, to operate efficiently under the various extreme temperature and weather conditions likely to be encountered. The standard atmospheric temperatures defined by Appendix 6 shall be assumed.

2. In particular the cooling of the engine, oil system, and accessories shall be suitable under the Tropical, Temperate and Sub-arctic standard temperatures of Appendix 6. Attachable systems to cater for temperatures higher than the Temperate condition are not acceptable.

Ventilation+

3. General.- Efficient ventilation shall be provided at all crew stations.

4. The intake and ducting of the system shall be positioned so that there is no risk of carbon-monoxide contaminated air entering the cabin either in normal use or as a result of enemy action.

5. Single engine aeroplanes.- In single-engine aeroplanes, with enclosed cockpits, there is serious risk of contamination of cockpit air by carbon monoxide, and in all such aeroplanes a ventilation system completely under the control of the pilot must be provided.

6. All places where leaks from the outside air might occur shall be effectively sealed, and the engine crank case vent pipe must not pass through the fuselage where a leak from it would have access to the cockpit.

7. It should be noted that sealing against entry of air is important at the rear end of the fuselage, where external pressure is high. The sealing should be arranged so that it's effectiveness will not be impaired by normal Service use and maintenance.

8. The ventilation intake shall be arranged to maintain the cockpit air at a pressure slightly above the external pressure on all parts of the cockpit where leaks might possibly occur, under all conditions of flight.

9. It should be noted that the suppression of extraneous leaks and the use of controlled ventilation will render heating

---

+See A.T.N. No.145

more economical and will in general reduce the drag of the aeroplane. A further important point is that the risk from flames blowing back from burning fuel tanks would be reduced.

Heating

10. The heating systems shall be designed to ensure adequate comfort for the crew, and to ensure efficient functioning of all equipment, under the various climatic conditions likely to be encountered by the aeroplane.

11. The heating at crew stations shall be controllable. On single engine aeroplanes the heating may be achieved by a controlled heating of the ventilating air, (see above) or by a separate hot air system - preferably the latter.

12. On military transport aeroplanes the minimum acceptable temperature at all crew and passenger stations is 18°C. On all other types the acceptable minimum for crew stations is 0°C; additional minimum acceptable temperatures are as follows:-

.30", .303", and .5" guns	-10°C
All other guns	0°C
Wireless sets	-40°C
Cameras (including camera guns)	-10°C
Gyro instruments	-20°C
Accumulators	-10°C

and the temperatures shall not fall below these minima during any conditions of climbing (excluding the initial climb from ground level) or level flight at the particular altitude specified in the Aeroplane Specification, or, if no altitude is specified, at any altitude up to the full load service ceiling; where a rest or casualty bunk is fitted a higher minimum temperature than 0°C should be aimed at, 10°C would be preferable.

13. Where operating conditions are conducive to the deposition of moisture, and where condensation, with the subsequent possibility of freezing, would adversely affect operation of equipment, a minimum temperature of 0°C should be obtained (unless the acceptable minimum is higher than this figure). For gyro instruments this limit of 0°C need be applied only up to 20,000 ft. since above this height there will probably not be enough moisture in the air to cause trouble, and lower temperatures are acceptable.

14. Points for the connection of electrically heated clothing shall be provided at all crew stations to guard against a failure of the aeroplane heating system.

15. It is important that all possible precautions shall be taken to avoid leaks and draughts in the fuselage or hull. Particular attention is necessary on the following points.-

(i) Avoiding openings for cameras, sextant sighting etc.
(ii) Effectively sealing doors, exit hatches, or other openings.
(iii) As far as possible avoiding leaks in gun turrets.

16. The design and installation of all hand operated control wheels or knobs+ switches and etc. shall be such that there is no difficulty in obtaining an effective grip or in operating the control with cold hands. The following points shall receive attention.-

(i) Control wheels and knobs should be made of wood or plastic and the use of metal should be avoided. They should be as large as possible consistent with their function and the periphery should be corrugated in preference to being milled or knurled.

(ii) All controls and switches should be so positioned that they may be readily operated with gloved hands. Press switches should not be used unless they are essential to the operation of the service controlled (e.g. gun firing, bomb release, etc.).

Weatherproofing

17. For the comfort of the crew it is essential that the fuselage or hull should be thoroughly weatherproof to prevent the entry of rain in flight or on the ground.

18. Waterproof covers shall be provided as indicated below, together with miscellaneous covers as required. The design and material of the covers shall be such as will ensure complete exclusion of water during heavy rainstorms, and shall be in plain colour, to blend with the camouflage scheme.

(i)	Propeller covers	Wooden propellers only
(ii)	Propeller hub covers	Variable pitch propellers
(iii)	Cockpit covers	All aeroplanes
(iv)	Engine covers	All aeroplanes
(v)	Turret covers	All aeroplanes with gun turrets
(vi)	Astro-dome covers	All aeroplanes with astro-domes.

Ice formation

19. De-icing equipment shall provide for full use during one third of the maximum operational endurance for which fuel is provided; this excludes the reinforcing endurance.

+ The control knobs referred to in Chapter 103, para.39, and the control wheel on the control column are not affected by these requirements.

20. Protection for the following parts against ice formation shall be provided on all aeroplanes,-

(i) propellers,
(ii) carburettors and air intakes,
(iii) pilot's windscreen
(iv) bomb-aimer's windscreen, and
(v) wings, tail plane and fin.

Detail requirements for these components are given in Chapter 714.

21. In addition to the above, the design of all exposed items such as aerials, control surfaces, doors and panels of all kinds used in flight, shall be such that their operation is not impaired by ice accretion.

Dust and sand proofing

22. Protection against sand and dust shall be provided on all landplanes and amphibians.

23. Provision shall be made to exclude sand and dust from working parts. This is of greatest importance near the ground, where special sealing and protection is needed. Exposed working mechanism, particularly the undercarriage and tail wheel, shall be designed so as to operate satisfactorily under sandy conditions; "gaiters" should in general, not be used.

24. Engine air intakes.- Air filters shall be fitted to the engine air intakes of all landplanes and amphibians. They shall function during taxying, take-off and alighting, and shall be automatically brought into circuit when the undercarriage is lowered and remain in circuit when the undercarriage is raised. A pilot-operated control shall be provided such that the air filters can be by-passed or selected at will during flight. Filter elements shall be of the dry type, and the installation shall be such that their removal for servicing can be effected quickly and easily. The elements shall be self-cleaning when by-passed. Adequate precautions shall be taken to prevent contamination of the filter elements by fuel and oil.

25. Other air intakes.- An efficient screen or cleaner shall be provided to prevent the ingress of sand and dust to instrument air filters, magneto vents and distributor vents.

26. Fuselage.- Accumulation of sand inside the structure shall be prevented. All entrances and hatches in the fuselage should be effectively sealed against the ingress of sand. Shrouding of openings on the underside of the fuselage, particularly the tail wheel opening, is usually desirable.

27. Hydraulic equipment.- All undercarriage oleos, hydraulic jacks, locks, micro switches, etc. shall be of a type which will operate satisfactorily under sandy conditions.

C

Dust and sand proofing (cont'd)

28. Gun bays.- Provision shall be made so that it is impossible for dust and sand to enter the gun bays of fixed gun fighter aeroplanes.

29. Bearings.- Entry of sand and dust into plain, ball and roller bearings should be prevented.+

Desert equipment

30. Provision for the carriage of emergency equipment for aircrew and aeroplanes for use after a forced landing in the desert (known as "Desert equipment")ø shall be made on all R.A.F. landplanes and amphibians.

31. Such provision shall include the necessary stowage space for the equipment together with the fittings and holes necessary for its attachment.

32. The equipment and, as far as possible, the attachment fittings shall be capable of being easily and rapidly installed and removed.

33. Dust excluding engine covers forming part of this equipment should as far as practicable consist of a single cover for each engine, fitting closely over the air intake inlet, exhaust outlet, radiator or cowl gill, and oil cooler.

+ This may be done by fitting grease retaining rings or felt pads. Shrouded type ball bearings, when supplied as such by the manufacturer, may be used. Plain bearings are less liable to give trouble.

ø Details of the items comprising this equipment are obtainable from M.A.P.(R.D.Q.5).

CHAPTER 120

MISCELLANEOUS OPERATIONAL REQUIREMENTS

A

CHAPTER 120

MISCELLANEOUS OPERATIONAL REQUIREMENTS

Spare leads

1. Instruments, plugs, and leads not forming part of the permanent equipment of the aeroplane shall be labelled to indicate, in the case of instruments, the positions occupied when fitted in the aeroplane, or, in the case of plugs or leads, their identities.

Guards

2. Fixed fittings for alternative load items, and moving parts, if liable to be accidentally damaged, shall be provided with detachable guards. Particular attention should be paid to chains and sprockets used in control circuits. Guards shall be so arranged that loose articles such as screws and nuts, inadvertently left in the neighbourhood, cannot enter and jam the system. Guards shall be readily detachable for inspection purposes.

Destruction of aeroplanes

3. In all operational aeroplanes stowage shall be provided for incendiary grenades of an approved type, on a basis of one for all single seat fighters and naval aeroplanes, and two for all other types, for the destruction of the aeroplane if forced to land in enemy territory.

4. Aeroplanes not fitted with fuel jettisoning shall be provided with a hand operated cock or plug, easily accessible in the case of a normal or crash landing, to enable the fuel to be drained rapidly for incendiary purposes.

Downward recognition lights

5. There should be no possibility of downward recognition lights becoming obscured with mud during take-off.

Signal pistol and discharger

6. All aeroplanes, other than naval single seat fighters, shall be provided with an upwards firing tube to take a mounted standard service signal pistol except that when this is impracticable, as may be the case with pressure cabin aeroplanes and single seat fighter/reconnaissance aeroplanes, fixed fittings for a signal discharger shall be provided. It is desirable that, in multi-seat fighters, the firing mechanism should be within reach of the pilot.

Parachute troops

7. When called for in the Aeroplane Specification, provision shall be made for the carriage and release of as many parachute troops as can be accommodated. If the exit is made through a door in the side of the fuselage the door must not be less than 12 ft. in front of the leading edge of the tailplane. The dimensions of the door should not be less than 4'6" by 2'6". If the exit is made through a hatch in

the floor, the aperture should not be less than 4 feet in diameter. The exit position should allow for the concentration of the troops, to facilitate exit in quick succession.

8. The structure round and aft of the parachute exits must be kept free of any projections which might foul the static lines. In particular, any di-pole aerials immediately aft of the exit must be provided with a fairing of transparent moulded material.

Camouflage finish

9. External colour schemes, special recognition colourings, and the identification markings of aeroplanes shall be in accordance with D.A.R.D. Technical Circular No.8.

Axes, crowbars and asbestos gloves

10. Stowage shall be provided for a fireman's axe in all cabin type aeroplanes except fighters and light aeroplanes having an enclosed cockpit, when stowage for a crowbar shall be provided in lieu. In multi-seater aeroplanes additional axe stowages up to a total of three may be required according to the number and position of crew stations. When a rear turret is fitted one of the additional stowages shall be in the rear turret. The number of stowages will be decided at the Mock-up Conference.

11. Stowage shall be provided on all multi-seater aeroplanes for a pair of asbestos gloves.

12. On metal skin aeroplanes the stowage for one fireman's axe, one of the hand fire extinguishers where fitted (see Chapter 100), and the asbestos gloves shall be accessible and readily recognisable from both inside and outside the aeroplane. It is preferable that these items should be together in one stowage and be visible from outside the aeroplane through a transparent covering.

Camera guns

13. On all fighter aeroplanes having fixed guns a camera gun shall be installed to operate both automatically when the fixed guns are fired and independently of them when so desired. When R.P. are fitted in addition to fixed guns it shall be possible to operate the camera gun in conjunction with either the R.P. or the fixed guns. The datum and the adjustment for the line of sight of the camera shall be the same as that of the fixed wing guns (see Chapter 712). The camera shall be installed so that,-

(i) vibration and the effects of firing the guns are at a minimum,

AP 970 Design Requirements for Aeroplanes AL25-37 19460801 OCR.pdf Page 103

(ii) its operation will not be affected by contamination from exhaust gases, fuel or oil,

(iii) the interior can be viewed with the camera in position, and

(iv) it can easily be loaded and unloaded, or serviced and replaced.

It shall not be positioned behind a transparent panel.

14. An inspection door of at least 8" x 6" shall be provided and shall be positioned to enable installation and harmonisation of the camera to be effected without detaching other parts of the aeroplane structure.

15. On naval types it shall be possible to meet the requirements of para.13(iv) with the wings either folded or spread.

16. A separate control shall be provided for the operation of the camera independently of the guns and shall be positioned where no risk of confusion with the gun firing control can exist.

Target towing

17. Fixed fittings for preliminary practice target towing gear shall be provided in all single and twin-engined operational landplanes.

Pressurisation

18. Pressurisation to ground level conditions at all operating heights is desirable on transport aeroplanes. Each type will, however, be considered on its merits and the pressure to be used quoted in the Aeroplane Specification. This pressure will be such that the use of oxygen is not necessary at any height while the pressure system is in operation. As a precaution against failure of the system, either mechanically or from enemy action, sufficient oxygen shall be provided for all occupants, to cover descent from service ceiling to a height at which oxygen is no longer necessary.

First aid outfits

19. Stowages for first aid outfits shall be provided in all aeroplanes except single and two seat fighters, torpedo fighters, and fighter bombers. Provision shall be on the basis of one outfit for a crew of three and an additional outfit for every group of three or part of such group.

20. The stowages shall be such that the outfits are accessible to the crew in flight and that at least one outfit is accessible from outside the aeroplane in the event of a crash landing.

RELEVANT M.O.S. PUBLICATIONS

Specifications

No. D.T.D.1020 - Flotation airbags
No. D.T.D.1081 - Felt/Canvas covering for oil tanks
No. D.T.D.1082 - Dry air sandwich windscreens.

Aircraft Design Memoranda

No. 500/23 - Warning lamps
No. 581 - Information required in submission of aircraft designs for consideration by M.O.S.
No. 588 - Operation of aircraft in Arctic winter - Special requirements
No. 599 - Carriage of R.P. on aircraft - Operational and design requirements (secret)
No. 603 - Machmeters for high speed aircraft
No. 605 - Pilot ejection from high speed aircraft

Standardisation Design Memoranda

No. 9 - Direct current motors for aircraft
No. 12 - Electric switches for aircraft
No. 16 - Electrical plugs and sockets
No. 17 - Warning horns
No. 38 - Filament lamps
No. 47 - Undercarriage position indicators for aircraft (excluding amphibians)
No. 61 - Electric gun-firing - Buttons and ring control handles

Airworthiness Technical Notes

No.112 - Reduction of noise in aircraft
No.116 - Flotation of landplanes
No.119 - Cabin heating
No.139 - Engine throttle controls
No.140 - Strength of armour plate supports
No.145 - Prevention of exhaust gas contamination in aircraft cabins and cockpits
No.160 - Installation of Type "Z" pilot's safety harness

RELEVANT M.O.S. PUBLICATIONS (CONT'D)

R.A.E. Reports

No. Aero 1730 - Flight tests of static longitudinal stability Notes on experimental technique and trim curves analysis
No. Aero 1901 - The estimation of ground effect on downwash with slipstream
No. Aero 1944 - General method of treatment of static longitudinal stability with propellers
No. Aero 1912) - A continuation of longitudinal stability and
1953) - control analysis (Parts I and II)
No. Aero 1960 - Method of estimating forward shift of neutral point due to body and nacelles
No. Aero 2019 - Wake and downwash behind wings and wing body combinations without flaps or propellers
No. Aero 2095 - Limiting dimensions of cockpit framing based on the geometry of binocular view
No. B.A. 1426 - Note on windscreen shapes and pilot's views
No. B.A. 1522 - Wind tunnel and flight tests on direct vision windscreen opening

R.A.E. Technical Notes

No. Aero 1715 - The estimation of the aerodynamic loads on external stores
No. S.M.E.58 - Proposal for definition of the standard airman

Scientific and Technical Memoranda

1/39 - Reduction of noise in aircraft
S1/41 - Properties of steel and duralumin deflector plates(secret)
S1/43 - Protection of aircraft against enemy fire (secret)
8/43 - Safety of aircraft in ditching
26/44 - Refuelling flying boats during flight

D.A.R.D. Technical Circulars

No. 8 - Camouflage and identification marking of aircraft (see also D.T.D. Technical Circular No.360)

PART 2

STRUCTURAL STRENGTH AND DESIGN FOR FLIGHT

(8123) T14097/2692 500 1/44 M46506 C & P 757

AP 970 Design Requirements for Aeroplanes At 25-37 1946[illegible]

PART 2

Structural strength and design for flight

CONTENTS

Chapter 200	General requirements - Strength and design for flight
Chapter 201	Symmetric manoeuvres
Chapter 202	Asymmetric manoeuvres
Chapter 203	Gust loads
Chapter 204	Engine and propeller loads
Chapter 205	Main plane control surface loads
Chapter 206	Tail unit loads
Chapter 207	Control systems
Chapter 208	Spinning and spin recovery

A

CHAPTER 200

GENERAL REQUIREMENTS

STRENGTH AND DESIGN FOR FLIGHT

Note.- The subject matter of this Chapter has been completely revised with A.L.No.29 and incorporates material from J.A.C.Papers No.237 and 238.

A.

Amended by A.L.No.33

CHAPTER 200

GENERAL REQUIREMENTS

STRENGTH AND DESIGN FOR FLIGHT

Introduction

1. The requirements of this chapter are applicable to monoplanes of conventional design. Appropriate adjustments of the requirements shall be made when considering other aeroplane types.

General loading and C.G. conditions

2. Unless specifically stated otherwise, the flight conditions and factors specified for any role shall be associated with the maximum design take-off weight for that role, with all practicable distributions of the disposable load possible at that weight. In general the designer shall ensure also that at all possible flying weights lower than the maximum design take-off weight and with all load distributions and C.G. positions possible at these weights the flight factors will not fall below the basic specified values. An exception to this requirement will be made in the case of a design which provides for considerable variations in the make-up or distribution of the total load, when,-

(i) structural efficiency can be materially improved by the exclusion of some of the possible variations,

(ii) the variations excluded are not operationally essential, and

(iii) the proposed limitations are capable of reasonably concise definition in terms of practicable flight limitations.

Any such proposed limitations shall be submitted to the D.T.D. for consideration at an early stage.

Allowance for air compressibility

3. Basic requirement.- In all design calculations the effects of air compressibility shall be allowed for in accordance with the best available data. These data should include, wherever possible, information from full scale flight tests on comparable aeroplanes or from high speed wind tunnel tests of the particular design.

4. The above basic requirement is amplified where there are sufficient data to justify such a course. Such amplifications (whether given in this general chapter or in the text of particular requirements) apply whenever the Mach number for the particular design condition considered is 0.8 or lower. In general an adequate correction will be to increase low speed values of no-lift pitching moments by a factor,- $1/\sqrt{1 - M^2}$ and low speed values of the slope of the normal force/incidence (or control angle) curve by the appropriate compressibility correction factor, f(M), given by Fig.1. If the aeroplane can achieve Mach numbers higher than 0.8 within the limitations of its specified flight envelope, it will be necessary to consider these high Mach

number conditions in design, and the designer shall submit his proposed design basis for such conditions to the Director, R.A.E.(S.M.E.Dept.) for consideration. General design recommendations are given in Airworthiness Technical Note No.150.

5. High speed dive recovery safeguards.- In dives at speeds corresponding to Mach numbers greater than 0.7 there is a serious risk that the elevator control alone will not ensure recovery. To safeguard against this risk, prototype aeroplanes expected to achieve Mach numbers greater than 0.7 during initial dive tests shall be provided with such precautionary devices as may be prescribed by P.D.T.D. Any such precautionary device shall operate automatically after selection by the pilot and shall be operable over the full range of movement "close - open - close" at least once independently of whether the engine is functioning or not, and at least twice when the engine is functioning. Subject to the concurrence of the Director, R.A.E. however, the precautionary device may be omitted when the anticipated Mach number does not exceed 0.85.

6. An acceptable precautionary device is provided by fitting two small flaps, one under each wing near the leading edge. The Director, R.A.E. (Aero Dept.) will advise upon the design of these flaps.

7. A decision whether or not this safeguard shall be included in all subsequent aeroplanes of a type will be made by P.D.T.D. in the light of tests on the prototype, but consideration shall be given in the design of the initial installation to its suitability for use by Service pilots.

8. Control surface deformations.- The skin covering of the control surfaces (especially ailerons and elevators) shall be so designed that under all conditions of flight, the deformation from the true profile is not sufficient to give undesirable changes in stick force characteristics.In this connection consideration shall be given to the recommendations of Airworthiness Technical Note No.157.

Spanwise air load distribution

9. General.- The spanwise air load distribution shall be ascertained whenever possible by full scale or model pressure plotting tests. In the absence of such data the spanwise load distribution shall be calculated by a method based on the Lanchester-Prandtl vortex theory.+

10. Fuselage effect.- The effect of the fuselage on the spanwise air load distribution should be determined by test, either by pressure plotting (model or full scale) or by measuring wing bending moments and shear forces in the wind tunnel. Tests are particularly desirable where the effects of interference between the wing and the fuselage are expected to cause a large disturbance of the lift distribution.

+ Appendix 3 gives details of one such method.

AP 970 Design Requirements for Aeroplanes AL25-37 19460801 OCR.pdf

Spanwise air load distribution (cont'd)

11. If the results of such tests are not available the following assumptions shall be made. The lift distribution along the span shall first be calculated neglecting entirely the presence of the fuselage and assuming the wing to be continuous over the centre section. Allowance for the effect of the fuselage on this basic distribution shall then be made by an amount dependent on the angle between the no lift line of the wing and that of the fuselage and also upon the wing's vertical position in relation to the fuselage. The loading outboard of the fuselage shall be increased proportionately at all points to give the same total lift as calculated for the plain wing.

12. The reduction over the fuselage should be calculated from the following formula;-

$$B = C_L (L - A)$$

where L is the percentage loss of lift, and A and B are constants whose values are to be found from the following table.

	Wing setting		
	0°	Intermediate values	8°
Low wing types			
A	+ 13	Linear variation	+ 17
B	+ 5	with wing setting	+ 12
High wing types			
A	+ 14	Linear variation	+ 10
B	- 4	with wing setting	+ 3

13. For types intermediate between low wing and high wing, values of A and B should be found by linear variation with the distance of the wing root from the bottom of the fuselage.

14. Effect of nacelles.- Allowance should be made for the effect which the presence of nacelles has on the spanwise air load distribution. In particular, adequate allowances should be made for the increased loading carried by outboard portions of the wings when the wing incidence and the setting of the nacelles relative to the wing are such as to produce a negative resultant lift on the nacelles.

15. Effect of elastic deformation.- If elastic wing deformation is likely to be such as to cause significant change in the distribution of the air loading appropriate to the undeflected wing, suitable allowance for this effect shall be made.

+ From J.A.C.Paper No.258.

Spanwise air load distribution (cont'd)

16. Effect of air compressibility.- If local shock stalling (especially near the wing root) is likely to occur at speeds within the specified flight envelope, the effect of this upon the spanwise air load distribution should be allowed for in the structural calculations.

C

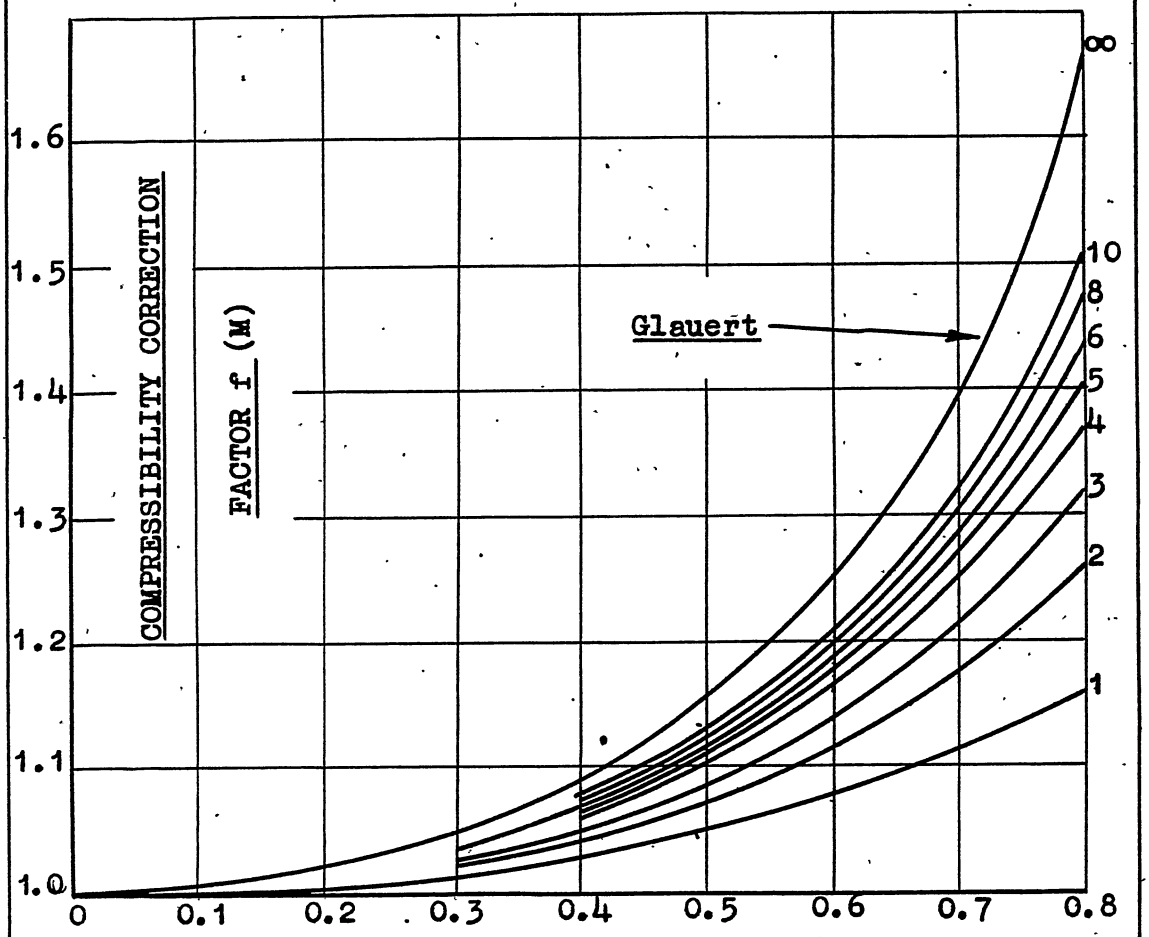

Fig 1

COMPRESSIBILITY CORRECTION FACTOR

C

RELEVANT M.O.S. PUBLICATIONS

Aircraft Design Memoranda

No. 603 - Machmeters for high speed aircraft

Airworthiness Technical Notes

No. 105 - The use of models for strength and stiffness tests
No. 150 - Stressing with compressibility
No. 157 - Limitation of control surface deformation under load

R.A.E. Reports

No. Aero 1725 - A survey of compressibility effects in aeronautics
No. Aero 1749 - Note on the drag effect of shock waves
No. Aero 1767 - Flight measurements of profile drag at high speeds
No. Aero 1886 - The effect of fuselage and nacelles on wing bending moment, shear and torsion
No. Aero 1911 - Note on longitudinal stability and trim changes at speeds near the speed of sound
No. Aero 1926 - A further survey of compressibility effects in aeronautics
No. S.M.E.3288 - Distortion of control surface panels. Part 1 (Theoretical)

R.A.E. Technical Notes

No. Aero 1250 - Note on the effect of compressibility on the lift curve slope of a wing of finite span
No. Aero 1293 - Note on the effect of compressibility on C_{Mo}
No. Aero 1710 - A collection of data on dive-recovery flaps
No. Aero 1715 - The estimation of the aerodynamic loads on external stores
No. Aero 1753 - The construction of models for low speed wind tunnel tests
No. S.M.E. 336 - The allowable deflections of control surface panels

OTHER PUBLICATIONS

A.R.C. Reports

R.& M.1643 - An approximate method of determining the aerodynamic loading on the wings of a monoplane
No.5944 - Compressibility phenomena as related to airplane structural design
No.6529 - Empirical laws for the effect of compressibility on moment coefficient

OTHER PUBLICATIONS (CONT'D)

N.A.C.A. Reports

No.540 - Interference of wing and fuselage from tests on 209 combinations in the N.A.C.A. variable density tunnel
No.572 - Determination of the characteristics of tapered wings
No.585 - Span load distribution for tapered wings with partial span flaps

N.A.C.A. Technical Memoranda

No.948 - A simple approximate method for obtaining the spanwise lift distribution (Reprinted in the Journal of the Royal Aeronautical Society, Vol.XLV, No.370, Oct.1941)

Bulletins issued by the U.S.A. Army - Navy - Civil Committee on Aircraft Design Criteria

ANC-1(1) - Spanwise airload distribution
ANC-1(2) - Chordwise airload distribution

CHAPTER 201

SYMMETRIC MANOEUVRES

Note.- The subject matter of this chapter has been completely revised with A.L.No.30 and incorporates new requirements from J.A.C.Paper No.244. A

Amended by A.L.No.30

CHAPTER 201

SYMMETRIC MANOEUVRES

Introduction

1. The requirements of this Chapter apply to all aeroplane types and to the aeroplane as a whole in each case. The requirements are expressed in terms of a flight envelope, the co-ordinates of which are the forward speed and normal acceleration of the aeroplane.

Factor

2. The aeroplane structure shall have an ultimate factor of not less than 1.5 under conditions involving steady normal acceleration and forward speed as represented by all points within and on the boundary of the specified flight envelope, and under the specified manoeuvres involving pitching acceleration within that envelope.

The flight envelope

3. The general flight envelope is defined by Fig.1 and by the values of n_1 and V_D which will be given, with any necessary amplification for special types, in the particular Aeroplane Specification.

Flight conditions involving steady normal acceleration

4. The conditions represented by the points A, B, B_1, C, D and E shall be investigated in detail. Cases represented by intermediate points shall be examined, but need not be investigated in detail if it is established that none of them gives loads anywhere in the structure greater than the loads given by the terminal point cases.

5. Balancing loads.- In determining the wing loads and the balancing tailplane loads it shall be assumed that the aeroplane is flying level when the incidence is suddenly changed, without loss of speed, to produce the specified acceleration; angular acceleration shall be assumed to be zero at the instant the normal acceleration is experienced, the balancing tail load being calculated accordingly.

Manoeuvres involving pitching acceleration

6. The structure shall have the required factor under an angular acceleration in pitch of

$$\left(65 + \frac{3.5 \times 10^5}{W}\right) \frac{n}{V} \text{ radians/second}^2$$

where W ..... lb. ..... the all-up weight of the aeroplane or 7,000 lb. whichever is the greater.

n ..... has the highest positive value (from the flight envelope) corresponding to speed V.

V ..... ft/sec. .. the appropriate speed.

7. This pitching acceleration shall be assumed to be produced by a manoeuvring load at the tailplane acting in the direction appropriate to the manoeuvre. The manoeuvring load acts downwards when the manoeuvre is one of increasing normal acceleration, and upwards when the manoeuvre is one of decreasing normal acceleration. The manoeuvring tailplane load shall be assumed to be reacted entirely by the pitching inertia of the aeroplane.

8. The loads arising from the manoeuvre described in paras.6 and 7 shall be added to the balancing loads arising from the appropriate initial condition of steady normal acceleration.

Supplementary conditions and assumptions

9. Engine power.- The specified factors shall be achieved in the "engine off" condition and also with any engine power condition reasonably likely to occur in association with the particular acceleration and speed under consideration.

10. Flaps and undercarriage.- Flaps, undercarriage etc. shall be assumed in the usual position for cruising flight.

11. Pitching moment coefficient.- The low speed value+ of the pitching moment coefficient due to wings, fuselage and nacelles shall be determined by wind tunnel tests. The position of the aerodynamic centre of the wing alone, and the influence of the fuselage and nacelles, should be similarly determined.

12. Appropriate allowance shall be made for the effect on the pitching moment coefficient of imperfections in or modifications to the shape of the aerofoil section or of the body, deformation or inaccurate rigging of the ailerons, or errors in the wind tunnel tests. It is recommended that this be done as indicated in para.13 below. The values given may be reduced when there is satisfactory evidence to justify the reduction.

13. The nose down (negative) pitching moment coefficient should be increased by -0.0075 in those cases where nose down pitching moments provide critical design conditions (e.g. high speed dives). When calculating nose up (positive) pitching moments (e.g. low speed pull-outs) the distance between the aerodynamic centre and the C.G. should be increased by 2.5% of the mean chord. In any case the most adverse practicable combination of loading and c.g. shall be used in obtaining the tailplane loads.

14. The total nose down low speed pitching moment coefficient shall be taken as not less than the following:-

---

+ i.e. the value appropriate to speeds at which compressibility effects are negligble.

AP 970 Design Requirements for Aeroplanes AL25-37 19460801 OCR.pdf

Supplementary conditions and assumptions (cont'd)

Wing engined aeroplanes $C_{m_o} = -0.030$
Single engined aeroplanes $C_{m_o} = -0.025$

15. Compressibility effects.- The low speed pitching moment coefficients (as defined above) contributed by the various parts of the aeroplane, excepting that part due to the propeller 'fin' effect, shall be multiplied by $1/\sqrt{1 - M^2}$ where M is the Mach number appropriate to the design diving speed at 10,000 ft. Other aerodynamic coefficients shall be corrected in an appropriate manner.

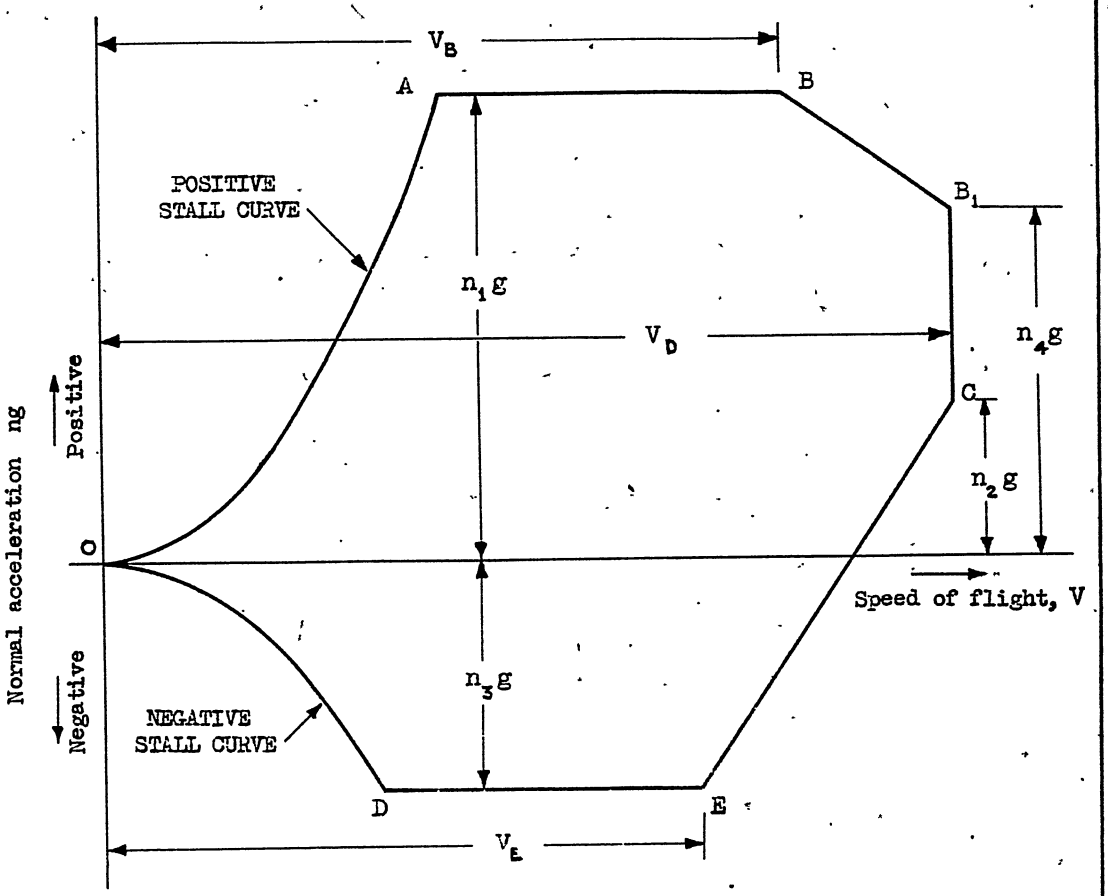

Values specified for particular aeroplane types

V_D ... Design diving speed.
n_1 ... Maximum normal acceleration coefficient.

Dependent values

$V_B = 0.8\ V_D$
$V_E = 0.7\ V_D$
n_2 = 1.0 if n_1 is less than 3.0, or zero if n_1 is 3.0 or greater
$n_3 = 0.5\ n_1$ or 1.0, whichever is greater
$n_4 = 0.75\ n_1$

BASIC FLIGHT ENVELOPE

Fig. 1

B

RELEVANT M.O.S. PUBLICATIONS

Airworthiness Technical Notes

No.117 - Pressure difference due to fast diving
No.150 - Stressing with compressibility

R.A.E. Reports

No. Aero 1725 - A survey of compressibility effects in aeronautics
No. Aero 1743 - Note on the estimation of C_{Mo}
No. Aero 1749 - Note on the drag effect of shock waves
No. Aero 1767 - Flight measurements of profile drag at high speeds
No. Aero 1926 - A further survey of compressibility effects in aeronautics

R.A.E. Technical Notes

No. Aero 1250 - Note on the effect of compressibility on the lift curve slope of a wing of finite span
No. Aero 1293 - Note on the effect of compressibility on C_{Mo}
No. Aero 1715 - The estimation of the aerodynamic loads on external stores

OTHER PUBLICATIONS

A.R.C. Reports

No.R.& M.1916 - Rational stressing cases for symmetrical flight
No. 5944 - Compressibility phenomena as related to airplane structural design

CHAPTER 202

ASYMMETRIC MANOEUVRES

Note.- The subject matter of this chapter has been amended following J.A.C. Paper No. 265.

A

Amended by A.L.No.30

CHAPTER 202

ASYMMETRIC MANOEUVRES

Introduction

1. The requirements of this chapter are applicable to all aeroplanes and to the aeroplane structure as a whole unless otherwise specified. The asymmetric flight conditions of side slipping and rolling are considered, spinning being dealt with in Chapter 208.

Side slip

2. The aeroplane as a whole shall be safe for any angle of yaw reasonably likely to occur. The effects of yaw are usually most noticeable on the fin and rudder (see Chapter 206) and bomb and undercarriage doors.

3. Bomb doors.- The following requirements are applicable to bomb-doors with hinge lines approximately parallel to the plane of symmetry of the aeroplane.

4. Strength.- Bomb doors, their hinges, levers, and supporting structure shall have an ultimate factor of at least 1.5 on the aerodynamic loads obtained under the following conditions when the doors are in any position.

(i) Case A.- Flight at the design diving speed with the plane of symmetry of the aeroplane vertical and inclined at ψ_1° to the flight path (i.e. ψ_1° yaw).

where $\psi_1^\circ = \frac{450}{V_D} \times 5^\circ$

and V_D is in ft/sec.

(ii) Case B.- Flight at the maximum speed in level flight with the plane of symmetry vertical and inclined at ψ_2° to the flight path.

where $\psi_2^\circ = \frac{400}{V_M} \times 15^\circ$

and V_M ... ft/sec. ..... maximum level speed.

5. Usually Case B will override Case A, and only the more severe case need be investigated.

6. Assessment of air loads.- The aerodynamic loads for the basic stressing cases should be obtained from full scale or wind tunnel tests. In wind tunnel tests, attention should be paid to the effect of angle of pitch. The loads on open bomb doors may be considerably and adversely affected by the open bomb cell acting as a scoop. To ascertain the possibility of this, the tests should be made with a greater fuselage incidence than the maximum believed to be attainable in flight

Side slip (cont'd)

and due allowance made in the subsequent stressing.

7. Various combinations of open and closed doors may need to be considered since one door may cause aerodynamic interference with another. If the bomb doors lie in the slip-stream reference should be made to The Director, R.A.E. (S.M.E.Dept).

8. Substitute loads.- In the absence of satisfactory test data, the loadings given below should be taken as substitutes for the basic loads in 4(i) and (ii). If compliance is difficult, wind tunnel tests are strongly recommended. The loads normal to the surface shall be considered acting in either sense, i.e. tending to open or close the doors. An ultimate factor of at least 1.5 is required under the following conditions;

(i) Case I (Doors open).- For this case the door is fully open, approximately at right angles to the closed position, and held by the operating mechanism. The mean surface loading w_1 lb/sq.ft. is given by

$$w_1 = 0.7 (A + 0.1) V_M$$

where A (non dimensional) ... Width of door divided by length (length being measured parallel to hinge line).

V_M ..... ft/sec. ..... Maximum level speed.

The intensity of loading is uniform along lines perpendicular to the hinge line and varies linearly along lines parallel to the hinge line in the ratio of 3:1 from leading edge to trailing edge.

(ii) Case II (Doors closed).- With the door in the closed position it may be necessary to investigate two conditions; one with the loads carried by the operating mechanism, the other with the loads carried by hinges and stops. The mean surface loading w_2 lb/sq.ft. is given by

$$w_2 = 0.25 (A + 0.1) V_M$$

where A and V_M are as for Case I.

The intensity of loading is uniform along lines parallel to the hinge line and varies linearly

B

Side slip (cont'd)

along lines perpendicular to the hinge line in the ratio 2:1 from the free edge to the hinge edge.

9. Stressing details. - It will normally be sufficient to stress the bomb doors for the two positions, "open" and "closed" only. It may, however, be necessary to consider two "closed" conditions with the same aerodynamic loads,

(i) where the door is completely closed and locked, and

(ii) almost closed but not supported by its locks and stops.

10. The direction and distribution of the loading should be obtained from the wind tunnel tests.

Rolling

11. Aileron wing loads. - The cases considered cover a range of speeds and the associated aileron angles likely to occur over this range, together with the range of normal accelerations likely to be superimposed on the rolling conditions. A flight envelope is therefore specified in which normal acceleration and flight speed form, as usual, the principal parameters with aileron angle entering as a function of speed. Usually it will be necessary only to establish that the strength is satisfactory at 2 or 3 corner points on the envelope.

12. Factor. - The wings and wing attachments to the fuselage shall have an ultimate factor of not less than 1.5 under the loads which occur during the conditions specified in para.13.

13. Main flight conditions:-

(i) Flight speed. - All values between 0.8 V_M and 0.9 V_D, where V_M is the maximum equivalent airspeed in level flight and V_D is the design diving speed.

(ii) Normal acceleration.- All values between 0 and $\frac{n_1}{2}g$ except that no points outside the symmetric flight envelope need be considered.

(iii) Aileron angles. - The aileron angle used for stressing shall be related to the expected rolling performance of the aeroplane.

14. Calculation of aileron angles.- The aileron angle used for stressing at any particular speed shall be the greatest given by the following considerations within the limitations imposed by stops in the control circuit.

(i) Minimum acceptable rolling performance.- The aileron angle at speed V_o ft/sec. E.A.S. may be calculated from the expression -

$$\xi_o \text{ (degrees)} = 0.625p \frac{\ell_p}{\ell_\xi V_o} \frac{b\sqrt{\sigma}}{1 - \frac{V_o^2}{V_r^2\sqrt{1 - M_o^2}}}$$

where p degrees/sec. .... a rate of roll to be taken as $1\frac{1}{3}$ times the specified minimum rate of roll at speed V_o,

ℓ_p ..... damping moment coefficient+

ℓ_ξ ..... aileron rolling moment coefficient,+

σ ..... relative density at appropriate height,

b ..... ft. ..... span,

V_r .... ft/sec. .... reversal speed for incompressible flow,

V_o ... ft/sec. .... 0.85 V_D,

M_o ..... Mach number appropriate to speed V_o.

At speeds greater than V_o, the aileron angle should be calculated on a basis of constant pilot's effort.

(ii) Rates of roll greater than minima.- If it is possible that the pilot will be able to apply aileron angles greater than the angles given for stressing above, with a force on the control column of 60 lb. for a stick control, or 100 lb. for a wheel control, then the aileron angles corresponding to these pilot's efforts shall be used. With many types of aileron, (including most of those hitherto regarded as conventional) it is not possible to predict hinge moments accurately, or to adjust the hinge moments to the desired value. For such ailerons, the angles calculated for the above pilot's efforts shall be increased by 30%.

+ For the estimation of these coefficients see R.A.E. Technical Note No.Aero 1085.

C

Rolling (Cont'd)

(iii) Differential. - For ailerons having differential motion the actual angles shall be used for stressing, but the mean of the actual angles should correspond to the angles given in (i) and (ii).

15. Stressing assumptions. - Usually it will be satisfactory to make the following assumptions. -

(i) Aerodynamic and inertia loads appropriate to symmetric conditions at the specified speeds and normal accelerations.

(ii) Additional pitching moments applied to the wing within the aileron span. These moments will be applied in opposite senses to port and starboard wings; any difference in the pitching moments applied to the wings may be assumed to be balanced by an additional load on the tailplane. Normal forces (aerodynamic and inertia) due to roll are neglected.

(iii) The additional pitching moments should be based on the best aerodynamic data available. In lieu of better evidence the additional pitching moment coefficient C_M may be taken as 0.009 per degree of aileron angle, for all Mach numbers.

(iv) If the aileron is balanced by means of a tab, the effect of the tab on the pitching moment coefficient should be calculated from the best available data.

16. Transport aeroplanes. - Transport aeroplanes shall be stressed for the specified minimum rates of roll, irrespective of the pilot's effort required to achieve this rolling performance.

RELEVANT M.O.S. PUBLICATIONS

Airworthiness Technical Notes

No.114 - The calculation of aileron reversal speeds
No.131 - Aileron design

R.A.E. Reports

No.Aero 1840 - Lifting characteristics of aerofoils and controls with special reference to methods of estimation for design use
No.Aero 2011 - An analysis of the lift slope of aerofoils of small aspect ratio, including fins, with design charts for aerofoils and control surfaces

R.A.E. Technical Notes

No.Aero 1085 (Performance) - Estimation of aileron angle required to satisfy rolling standard
No.Aero 1715-The estimation of the aerodynamic loads on external stores

CHAPTER 203

GUST LOADS

Note.- The subject matter of this chapter has been completely revised with A.L.No.30 and contains new requirements from J.A.C.Paper No.245.

A

Amended by A.L.No.30

CHAPTER 203

GUST LOADS

General

1. The requirements of this Chapter are applicable to all aeroplanes and to the strength of the complete structure, when the aeroplane encounters gusts normal to the flight path both in the plane of symmetry (vertical gusts) and perpendicular to the plane of symmetry (horizontal gusts).

Factor

2. The complete structure shall have an ultimate factor of at least 1.5 under the loads arising in each case specified below.

Design conditions

3. The aeroplane is assumed to be flying in unaccelerated flight when gusts are met which increase linearly to their maximum intensity in a distance of 100 feet. The aeroplane speeds and the associated maximum speeds of the gusts are given in Table I.

4. The required strength shall be achieved at all weights between the maximum take-off weight and the minimum flying weight (i.e. take-off weight less bombs, ammunition and other items readily dropped or expended except for sufficient fuel for half an hours cruising at maximum weak mixture power).

Stressing assumptions

5. The trim of the aeroplane shall be assumed to be unchanged during the passage of the gust. Moreover, in the case of horizontal gusts on the fin and rudder unit, the steady flight balancing tail load shall be redistributed asymmetrically to an amount appropriate to the effective yaw produced by the gust (see Chapter 206).

6. In lieu of detailed calculations of the response of the aeroplane to the gust, design may be based on the assumption of sharp edged gusts whose magnitude should be obtained by multiplying the actual gust speed by the factor given by Figs.1 or 2, whichever is appropriate. When this method is used the angular velocity of the aeroplane should be neglected, the gust loads being added to the steady flight loads and being balanced by appropriate inertia forces.

7. In calculating the load on the tailplane and elevator due to the vertical gusts, allowance shall be made for the effect of the change in downwash produced by the gust on the main wing.

8. The slope of the normal force/incidence curve shall be obtained where possible from wind tunnel tests, or failing this from R.A.E. Report No.Aero 2011.

Stressing assumptions (cont'd)

9. Compressibility.- The value of the coefficient given by the slope of the normal force/incidence curve shall be corrected for compressibility effects. The low speed value of the coefficient shall be corrected by the appropriate compressibility factor, f(M), given in Fig.1 of Chapter 200.

B

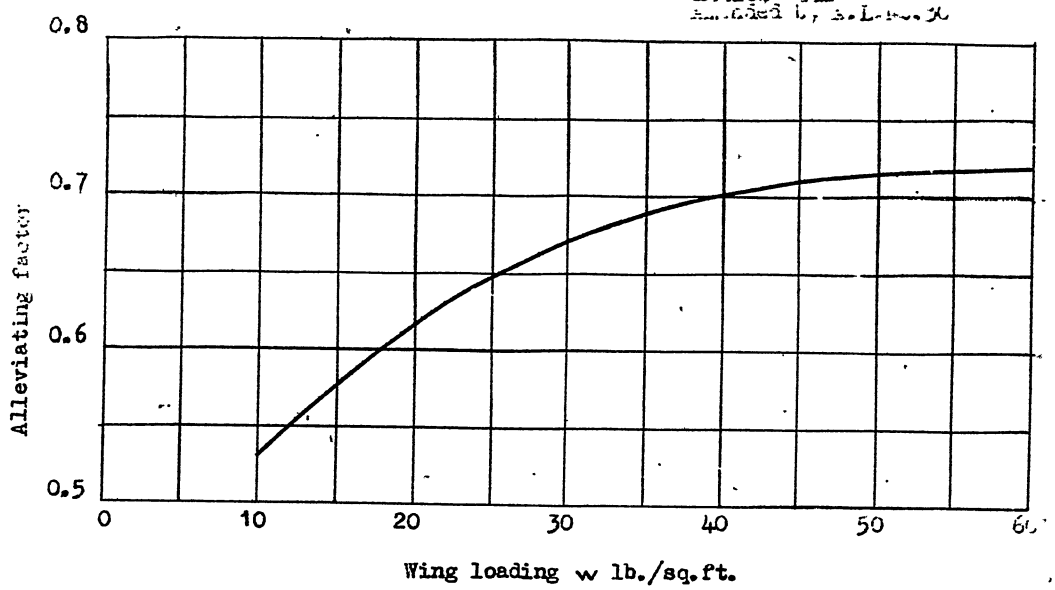

ALLEVIATING FACTOR FOR VERTICAL GUSTS

Fig.1.

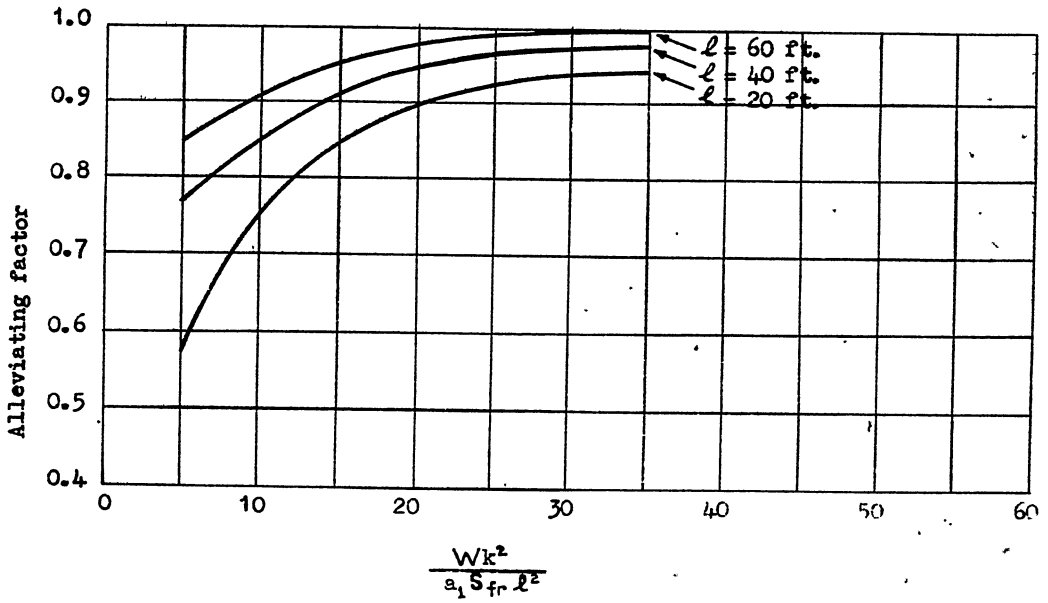

ALLEVIATING FACTOR FOR HORIZONTAL GUSTS

Fig.2.

Nomenclature

w ... lb/sq.ft.	...	Wing loading at the aeroplane weight in the particular stressing case considered.
W ..... lb.	.....	Weight of aeroplane in the particular stressing case considered.
S_{fr}.... sq.ft.	.....	Area of fin and rudder.
k ..... ft.	.....	Radius of gyration of aeroplane in yaw.
l ..... ft.	.....	Distance between aeroplane c.g. and rudder hinge line.
a_1 .... $rads^{-1}$	.....	Slope of fin and rudder normal force coefficient / incidence curve.

C

TABLE I

GUST CASES

Case	Direction of gust	Aeroplane speed	Gust speed	Aeroplane attitude before encountering gust
1.	Up or down normal to flight path	0.9 V_M	50 f.p.s. E.A.S.	Level.
2.	Horizontal normal to flight path	0.9 V_M	50 f.p.s. E.A.S.	Level.
3.	Up or down normal to flight path	0.9 V_D	25 f.p.s. E.A.S.	(a) Vertical dive for fighters, trainers, dive bombers. (b) Attitude appropriate to speed 0.9 V_D for all other types.
4.	Horizontal normal to flight path	0.9 V_D	25 f.p.s. E.A.S.	As Case 3.

Notes: V_M = Maximum equivalent air speed in level flight.
V_D = Design diving speed.

RELEVANT M.A.P. PUBLICATIONS

R.A.E. Reports

No. Aero 2011 - An analysis of the lift slope of aerofoils of small aspect ratio, including fins with design charts for aerofoils and control surfaces

CHAPTER 204

ENGINE AND PROPELLER LOADS

Note:- New requirements applicable to contra-rotating concentric propellers, from J.A.C. Paper No.207, have been incorporated by A.L.No.27.

FS/42

Amended by A.L.No.27

CHAPTER 204

ENGINE AND PROPELLER LOADS

General

1. The strength requirements of this chapter cover the forces imposed by the propeller thrust and torque, and the gyroscopic forces arising from the rotation of the aeroplane.

2. Gyroscopic forces may arise during a recovery from a dive, a flat or banked turn or a stable or incipient spin and in addition, allowance has to be made for the effect of manoeuvring and centrifugal forces.

3. One condition only need be considered in regard to the effect of forces due to manoeuvring, namely, that resulting from a recovery from a dive, the main planes being just stalled.

4. The stressing cases are chosen with the object of combining and simplifying the many and varied conditions which can occur from these forces, and are intended to cover all reasonable conditions of flight without necessarily representing any one condition precisely.

Propeller types

5. The following types and groups of propellers are considered, -

(i) Right or left-handed propellers, -

(a) 3 or more bladed,

(b) 2 ~~two~~-bladed, and

(ii) Contra-rotating concentric propellers, -

(a) 2 propellers directly coupled, each having three or more blades,

(b) 2 propellers independently driven, each having three or more blades, and

(c) 2 propellers, either directly coupled or independently driven, each having two blades.

Torque of contra-rotating propellers

6. Directly Coupled - With directly coupled propellers the resultant torque depends largely on the pitch setting and pitch changing mechanisms of the two propellers. If the pitch changing mechanisms are directly coupled, the resultant torque may be small; whereas, if they are independently controlled, a considerable difference in the torques of the two

Torque of contra-rotating propellers (cont'd)

propellers could occur. The resultant torque shall be estimated for the worst conditions liable to occur, and this torque used in stressing if it is greater than an over-riding minimum value of $\frac{1}{4}$ of the torque which would arise from one of the propellers acting alone and absorbing half the engine output.

7. Independently driven.- The condition giving the greatest resultant torque will be when one of the propellers is stopped. Hence, the torque to be used in stressing is that which would arise from either of the propellers acting alone.

Propeller gyroscopic couples

8. The mean gyroscopic couple is $I\omega\Omega$

where I ... slugs.ft.^{2} ... Polar moment of inertia of one propeller.

ω ... rads/sec. ... angular velocity of the propeller.

Ω ... rads/sec. ... angular velocity of the aeroplane as a whole.

9. Right or left-handed propellers.- The actual value of the gyroscopic couple used for stressing depends upon the number of propeller blades.-

(i) Three or more bladed.- With three or more blades the propeller behaves as a simple gyroscope, e.g. a rotating uniform disc, and the resultant gyroscopic couple has a steady value $I\omega\Omega$

(ii) Two-bladed.- For a propeller with only two blades the couple varies in magnitude and direction during a revolution. In the plane in which the steady gyroscopic couple would act for a simple gyroscope, the actual couple fluctuates between 0 and 2 $I\omega\Omega$, so that the latter value is used for stressing. There is also a couple in the plane at right angles to the above which fluctuates between $-I\omega\Omega$ and $+I\omega\Omega$.

10. The actual couples to be taken are stated precisely in the stressing cases. Each condition to be investigated, however, is frequently the worst of a number of possibilities and some selection has to be made. For convenience the gyroscopic couple is always assumed to be given by the formula $I\omega\Omega$, and the increase associated with a two-bladed propeller is obtained by adjustment of the value assumed for the rate of rotation (Ω) of the aeroplane as a whole.

B

Propeller gyroscopic couples (cont'd)

11. Contra-rotating concentric propellers -

(i) 3 or more bladed.- The actual value of the gyroscopic couple used for stressing depends upon the grouping of the propellers, thus,-

(a) Directly coupled:- This combination of propellers will behave as 2 uniform discs rotating in opposite directions and the gyroscopic couples will nearly balance out at the bearings of the concentric torque shafts. Allowance shall therefore be made for cases in which one propeller is driven at a slightly different speed from the other (for the purpose, perhaps, of avoiding resonance between the blades) and for any difference in the moments of inertia of the 2 propellers. The net gyroscopic couple shall be estimated from the best available data, and this estimated value shall be used in stressing if it is greater than an over-riding minimum value of $\frac{1}{8} I\omega\Omega$. The stressing cases of Table II are given in terms of a factor $1/m$ where $1/m\, I\omega\Omega$ is equal to the net gyroscopic couple.

(b) Independently driven:- Since the 2 propellers are driven independently, their speeds are liable to differ considerably, and the extreme case of one propeller stopped shall be considered. The gyroscopic couple for this case will then be that arising from a single uniform disc, i.e. $I\omega\Omega$.

(ii) 2-bladed.- In the plane in which the steady gyroscopic couple would act for a simple gyroscope, the couple arising in the worst case, whether for a directly coupled or an independently driven combination, will fluctuate between $-2\, I\omega\Omega$ and $+2\, I\omega\Omega$. There is also a couple in the plane at right angles to the above which also fluctuates in the worst case between $-2\, I\omega\Omega$ and $+2\, I\omega\Omega$. These couples are not less than for a 2-bladed propeller rotating alone, and the case in which one of the two propellers is stopped, will not be critical.

Rotation of the aeroplane

12. The value of Ω is based on the rate of rotation of the aeroplane in a spin (Ω_s) or in a rapid recovery from a dive (Ω_p).

13. The value of Ω_s shall be determined in accordance with Chapter 208.

14. Ω_p is the pitching angular velocity when the aeroplane recovers from a dive. The value of Ω_p to be taken is given by

$$\Omega_p = \frac{g}{V_s}\sqrt{n} \quad \text{radians/sec.}$$

where V_s ..... ft/sec. ... the stalling speed in level flight, flaps up.
n ..... the normal acceleration coefficient, as specified in Tables I and II.

Factors

15. The aeroplane shall have an ultimate factor of not less than 1.5 in all the appropriate stressing cases of Tables I and II.

Stressing cases

16. The stressing cases given in Tables I and II are based on various combinations of the following forces which may act on the aeroplane,-

(i) lift and body forces
(ii) propeller thrust and torque
(iii) gyroscopic yawing couple $I\omega\Omega_1$
(iv) gyroscopic pitching couple $I\omega\Omega_2$
(v) centrifugal forces corresponding to a yawing rotation about the centre of gravity with angular velocity Ω_3.

17. For each stressing case the conditions shown in columns (i), (ii), (iii), (iv), (v) shall be applied simultaneously. Appropriate values for ω, Ω_1, Ω_2, Ω_3 are given in the tables.

Stressing details

18. The stressing cases are based on the assumption that, apart from training aeroplanes and single seat fighters, a spin will either be an emergency manoeuvre or, when intentional, will be carried out by experienced pilots. Case 2a is, therefore, more severe than Case 2b.

19. For the purpose of stressing, the aeroplane is assumed to be in the stalled condition in the flight cases 1, 2 and 3 and flying at the speed appropriate to the specified normal acceleration.

20. It will usually be sufficiently accurate in the first place to obtain a balanced condition without the asymmetrical forces, i.e. the gyroscopic forces and the

C

Stressing details (cont'd)

propeller torque. For this condition the tail load will be appropriate to zero angular acceleration in pitch. Complete balance may be obtained by arbitrarily increasing or decreasing the lift on each plane and also the tail plane load.

TABLE I

STRESSING CASES FOR ENGINE AND PROPELLER LOADS - RIGHT OR LEFT HANDED PROPELLERS

Case.	Applicability.	Flight condition approximately represented.	(i) Normal acceleration coefficient.	(ii) Propeller thrust and torque.	(iii) Value of Ω_1 to be taken for gyroscopic yawing couple.		(iv) Value of Ω_2 to be taken for gyroscopic pitching couple.		(v) Value of Ω_3 to be taken for centrifugal yawing forces.
					Propellers with 3 or more blades.	Propellers with 2 blades.	Propellers with 3 or more blades.	Propellers with 2 blades.	
1	All aeroplanes	Recovery from a dive	n_1 or $3\frac{1}{3}$, whichever is the greater	0.9 of their values at maximum true speed in level flight	Ω_p	$2\Omega_p$ or Ω_s, whichever is the greater	Zero	Zero	Zero
2a	Training aeroplanes, and single seat fighters	Spins and flat turns	$3\frac{1}{3}$ or n_1, whichever is the smaller	0.9 of their values at maximum true speed in level flight	Zero	Zero	Ω_s or $0.5\Omega_p$, whichever is the greater	$2\Omega_s$ or Ω_p, whichever is the greater	Ω_s or $0.5\Omega_p$, whichever is the greater
2b	All aeroplanes except those specified in Case 2a	Spins and flat turns	$2\frac{2}{3}$ or n_1, whichever is the smaller	0.5 of their values at maximum true speed in level flight	Zero	Zero	Ω_s or $0.5\Omega_p$, whichever is the greater	$2\Omega_s$ or Ω_p, whichever is the greater	Ω_s or $0.5\Omega_p$, whichever is the greater
3	All aeroplanes	Gust accelerations & manoeuvring during climb	$0.5n_1$ or $2\frac{2}{3}$, whichever is the greater	Maximum thrust and torque that can occur during climb	Zero	Zero	Zero	Zero	Zero
4	All aeroplanes	Standing at rest	$1\frac{1}{3}$	Maximum static thrust and torque	Zero	Zero	Zero	Zero	Zero

Note: Propeller angular velocity for cases 1 and 2a = 1.0 x value corresponding to maximum propeller r.p.m.
" " " " case 2b = 0.7 x value " " " " "

Chapter 204 Amended by A.L. No. 30

TABLE II

STRESSING CASES FOR ENGINE AND PROPELLER LOADS - CONTRA-ROTATING CONCENTRIC PROPELLERS

Case	Applicability	Flight condition approximately represented	(i) Normal acceleration coefficient	(ii) Propeller thrust and torque+	(iii) Value of Ω_1 to be taken for gyroscopic yawing couple			(iv) Value of Ω_2 to be taken for gyroscopic pitching couple			(v) Value of Ω_3 to be taken for centrifugal yawing forces
					3 or more bladed		2-bladed	3 or more bladed		2-bladed	
					Directly coupled	Independently driven		Directly coupled	Independently driven		
1	All aeroplanes	Recovery from a dive	n_1 or $3\frac{1}{3}$, whichever is the greater	0.9 of their values at maximum true speed in level flight	$\frac{1}{8}\Omega_p$ or $\frac{1}{m}\Omega_p$, whichever is greater	Ω_p	$2\Omega_p$ or $2\Omega_s$, whichever is greater	Zero	Zero	Zero	Zero
2a	Training aeroplanes, and single seat fighters	Spins and flat turns	$3\frac{1}{3}$ or n_1, whichever is the smaller	0.9 of their values at maximum true speed in level flight	Zero	Zero	Zero	$\frac{1}{8}\Omega_s$; $\frac{1}{m}\Omega_s$ $\frac{1}{16}\Omega_p$; or $\frac{1}{2m}\Omega_p$, whichever is greater	Ω_s or $\frac{1}{2}\Omega_p$, whichever is greater	$2\Omega_s$ or $2\Omega_p$, whichever is greater	Ω_s or $0.5\Omega_p$, whichever is the greater
2b	All aeroplanes except those specified in Case 2a	Spins and flat turns	$2\frac{2}{3}$ or n_1, whichever is the smaller	0.5 of their values at maximum true speed in level flight	Zero	Zero	Zero	As above	As above	As above	Ω_s or $0.5\Omega_p$, whichever is the greater
3	All aeroplanes	Gust accelerations and manoeuvring during climb	$0.5n_1$ or $2\frac{2}{3}$, whichever is the greater	Maximum thrust and torque that can occur during climb	Zero	Zero	Zero	Zero	Zero	Zero	Zero
4	All aeroplanes	Standing at rest	$1\frac{1}{3}$	Maximum static thrust and torque	Zero	Zero	Zero	Zero	Zero	Zero	Zero

Note: Propeller angular velocity for cases 1 and 2a = 1.0 x value corresponding to maximum propeller r.p.m.
" " " " case 2b = 0.7 x value " " " " "

+ The value of the torque under the appropriate condition shall be determined as indicated in paras.6 and 7.

CHAPTER 205

MAIN PLANE CONTROL SURFACE LOADS

A

CHAPTER 205

MAIN PLANE CONTROL SURFACE LOADS

Ailerons

1. Strength.- On all types of aeroplanes and in all stressing cases in which the ailerons take a share of the total load on the wings, the ailerons and their attachments shall have an ultimate factor at least as great as that specified for the wings as a whole. The connecting circuit between port and starboard ailerons shall also comply with this requirement. The remainder of the control circuit, including the actuating lever and its attachment to the aileron, shall comply with the requirements of Chapter 207. Care should be taken to avoid sudden changes in strength and stiffness in the attachments to the aileron.

2. In addition to the above general condition the ailerons and their attachments shall comply with the strength requirements defined below.

3. The ailerons, attachments and local structure, shall have an ultimate factor of at least 1.5 under a total up or down load, normal to the aileron chord, due to the application of the aileron angles specified in Chapter 202, paras.17 to 20 inclusive, at the appropriate speeds and normal accelerations. The requirements of Chapter 202 regarding rate of roll greater than minima, and differential, shall also apply to the stressing of the ailerons.

4. Stressing details.-

(i) The total load on each aileron should be calculated from the best available data; in lieu of better evidence the normal force coefficient C_N (based on area aft of the hinge) may be taken as 0.04 per degree of aileron angle, for all Mach numbers.

(ii) For all ailerons the centre of pressure, for any aileron angle, should be taken at 0.4 of the total aileron chord behind the leading edge whether the leading edge is at or in front of the hinge line.

+ (iii) If the aileron is balanced by means of a tab, the effect of the tab on the hinge moment and normal force coefficient should be calculated from the best available data.

(iv) If the aileron is balanced by means of any portion of its area ahead of the hinge, then a second stressing case should be taken with the centre of pressure of the balanced portion at 0.25 of the aileron chord from the leading edge, the centre of pressure of the remaining portion being as laid

+ From J.A.C. Paper No. 265

down in para.4(ii). The chordwise load distribution over the balance portion should be taken as parabolic, as follows,-

$$y = \frac{3h\,x^2}{c_a^2}$$ where

y = ordinate of the load distribution curve at a distance x from the trailing edge,
h = mean height of the load distribution curve,
c_a = aileron chord.

The intensity of loading at the leading edge is three times the mean, and special attention should be paid to the strength of the aileron ahead of the hinge.

(v) On all ailerons the force coefficient may be taken as uniform along the span.

Paras.5, 6 and 7 deleted

Landing flaps

8. The following requirements are intended to cover the use of flaps during take-off, approach, and alighting. The requirements are defined in terms of.-

V_{sf} = equivalent stalling speed, engine(s) off, at maximum design landing weight and with flaps in the maximum lift position.+

V_s = equivalent stalling speed, engine(s) off, at maximum design landing weight and with flaps retracted.

9. Operating mechanism.- The operating mechanism shall be capable of lowering the flaps,-

(i) to the maximum lift position+ at any flight speed, engine on, up to and including 2.0 V_{sf} or 1.5 V_s whichever is the greater, and

(ii) to the fully down position at any flight speed, engine on, up to and including 1.75 V_{sf} or 1.5 V_s whichever is the greater.

10. Raising speed.- The speed at which flaps come up must be such that excessive sinking does not occur. This requirement should be associated with a speed of 1.5 V_{sf} and take-off boost and r.p.m.

+ The term "maximum lift position" is used throughout this chapter for convenience. In practice, it should be interpreted as that flap position which would be required immediately after a baulked landing.

B

11. For bomber and G.R. aeroplanes up to 70,000 lb., all-up weight, the time taken for the flaps to move from the fully down position to the retracted position shall not be less than 15 seconds; in general 15 - 20 seconds is a satisfactory period and quick travel during the early stage of the movement is an advantage. For aeroplanes over 70,000 lb. somewhat slower operation is acceptable and probably desirable.

12. For fighters, naval types, and trainers, excluding elementary trainers for which no requirements are specified, the flaps should come up as quickly as possible consistent with no serious sinking or change of trim (see Chapter 103).

13. Strength.- The complete structure shall comply with the stressing cases shown in Table I.

14. In addition to the cases of Table I, all single engined aeroplanes shall comply with the following asymmetrical case. The flap operating and interconnecting gear shall have an ultimate factor not less than 1.5 when the unfactored flap load for the steady flight case+ is increased by 10% on one side of the aeroplane centre-line and decreased by 10% on the other.

15. Circuit stiffness.- It shall be shown (by calculation or test) that the angles of deflection of corresponding port and starboard flaps will not differ by more than 5° under the unfactored loads of para. ~~13~~ 14 for single-engined aeroplanes, or Case 5 of Table I, for multi-engined aeroplanes.

16. Overload relief.- It is recommended that a device be included in the operating circuit (for instance a relief valve in a hydraulic system) to safeguard the flaps from damage if "flaps down" is selected at too high an airspeed. Such a device should be set so as to prevent further lowering of flaps once the unfactored airload given by Case 1 or 2 of Table I is reached. It is recognised that such a device may not, owing to the effect of friction, prevent damage due to too high an airspeed once flaps are down and, if so, this should be adequately explained in the Pilot's Notes.

17. Interconnection.- When the total flap surface is divided into two or more sections it is strongly recommended that direct mechanical coupling of the sections be provided. Any proposal to adopt an alternative to direct mechanical coupling should be referred to the Director R.A.E. for approval at an early stage.

+ Whichever of Cases 1, 2 or 3 in Table I gives the highest load.

18. When mechanical coupling is not used, special investigation should be made of the curve of flap hinge moment against flap angle. The occurrence of equal hinge moments for two different angles of the flaps may greatly increase the difficulties of ensuring synchronisation.

19. Stops.- Robust and positive stops should be provided so that the flaps cannot overrun the safe fully down position.

20. Stressing details.- The strength and stiffness called for in the flight cases should be achieved with the flaps in any position within the range specified. It will usually be sufficient to consider in detail only the extreme positions and the most critical intermediate position - probably that corresponding to peak operating force if such a peak occurs.

21. The manner in which the external loads specified will be reacted must be decided for each particular installation. The simple but arbitrary assumption that the mechanical interconnecting circuit carries a load equal to the difference between the airloads on the two flaps, while the basic loads in the operating circuit are unaffected, will probably give the simplest stressing case and will usually be acceptable. If this appears unduly severe, and it is clear that other parts of the operating circuit will share the load, a reduction to not less than one half may be made for the load in the direct connecting circuit.

22. When applying the ground case both the "take-off" and "landing" positions of the flaps should be covered but intermediate positions need not be considered. If the system has more than one operating unit, at least half of the external load should be assumed transferred through the connecting circuit to the remote operating unit.

Brake flaps.

23. Brake flaps shall be fitted on night fighter and torpedo fighter aeroplanes. On other types the Aeroplane Specification will indicate when brake flaps are required and also their intended operational use.

24. The operational uses for which brake flaps are considered in the following design cases are as follows,-

(i) to prevent the speed from rising too high when the aeroplane is dived steeply - as in dive bombing, and

(ii) to decelerate the aeroplane at high speeds.

C

25. For brake flaps whose operational use is defined in para.24(ii), two types of brake flap are considered,

(i) those which can be extended fully at the design diving speed, flaps up, of the aeroplane, i.e. with no limiting device, and

(ii) those with a limiting device which prevents the flaps from being fully extended above a certain predetermined speed V_b.

26. Strength.- The flaps, their supporting structure and the structure of the aeroplane as a whole shall have an ultimate factor of at least 1.5 on the loads occurring in the flight conditions specified in Table II.

27. Stressing details.- The loads arising from the use of a brake flap will consist of drag loads, mainly on the flap itself but partially due to interference drag on the wing, a couple due to the change in wing pitching moment, and a redistributed aerodynamic pressure around the wing section in the region of the flap. These loads should be estimated from the best available data.

28. In all the above cases a compressibility correction shall be applied to the pitching moments used in calculating loads. This correction should be made on the basis of the best available data. In the absence of wind tunnel data the correction should be made by multiplying by a factor of $1/\sqrt{1 - M^2}$; where M is the Mach number appropriate to the speed concerned and a height of 10,000 ft.

Slotted wings and slats

29. When it is proposed to adopt slotted wings on a new design, reference shall be made to the Director, R.A.E. at an early stage in the design, for agreement on appropriate stressing conditions.

AP 970 Design Requirements for Aeroplanes AL25-37 19460801 OCR.pdf

TABLE I

Stressing cases for landing flaps

Case No.	General conditions covered	Aeroplane speed	Aeroplane weight	Flap position	Engine power	Ultimate Factor	Remarks
1	Normal approach Beam approach Baulked approach Circuit	2.0 V_{sf} 1.5 V_s	W_1	Any angle from retracted to maximum lift.	Full power	2.0	
2	Final approach Baulked landing	1.75 V_{sf} 1.5 V_s	W_1	Any angle from maximum lift to fully down.	Full power	2.0	
3	Normal take-off	2.0 V_{sf} 1.5 V_s	W_2	Any angle from retracted to take-off position.	Take-off power	2.0	
4	Up gust during take-off or approach	2.0 V_{sf} 1.5 V_s	W_1	Maximum lift position.	Zero thrust	2.0	Gust speed 25 ft. per second E.A.S.
5	Engine failure during take-off or approach	2.0 V_{sf} 1.5 V_s	W_1	Maximum lift position.	Zero thrust from any one engine, take-off power from other(s)	1.5	Not applicable to single-engined aeroplanes, see para. 14.
6	Manoeuvring on ground	Aeroplane stationary	-	(i) Take-off position (ii) Fully down	Take-off power from any one engine, zero thrust from other(s)	1.5	

Notes: (1) The higher of the two speeds quoted in column 3 is to be used for stressing.

(2) W_1 = maximum specified weight for landing.
W_2 = maximum specified weight for take-off.

(3) V_{sf} = equivalent stalling speed, engine(s) off, at W_1, flaps in maximum lift position.
V_s = equivalent stalling speed, engine(s) off, at W_1, flaps retracted.

(4) The term "maximum lift position" is used for convenience here. It should be interpreted as that flap position which would be required immediately after a baulked landing.

TABLE II

STRESSING CASES FOR BRAKE FLAPS

Type of brake flap	Stressing speed	Flap position	Range of normal acceleration
'Dive bombing' flap (see para.24(i))	$1.15V_{Df}$ or V_D whichever is the less	Fully extended	0 to the maximum normal acceleration corresponding to the stressing speed
'Decelerating' flap without limiting device (see para.25(i))	V_D	Fully extended	0 to 0.75 n_1g
'Decelerating' flap with limiting device (see para.25(ii))	$1.15V_b$ or V_D whichever is the less	Fully extended	0 to the maximum normal acceleration corresponding to the stressing speed
	V_D	Flaps extended as far as permitted by the limiting device	0 to 0.75 n_1g

Notes: (1) V_{Df} = maximum speed with flaps extended at the specified angle of dive, (which may be up to the vertical).

(2) V_D = design diving speed.

(3) V_b = maximum speed with brake flaps fully extended as determined by the limiting device in the flap operating gear.

RELEVANT M.O.S. PUBLICATIONS

Airworthiness Technical Notes

No.131 - Aileron design

R.A.E. Technical Notes

No. Aero 1710 - A collection of data on dive recovery flaps
No. S.M.E. 27 - Notes on strength and stiffness problems arising in brake flap design
No. S.M.E. 28 - Note on tail loads due to brake flaps

R.A.E. Reports

No. Aero 1744 - Wind tunnel tests on the effect of brake flaps on lift and trim
No. Aero 1747 - Note on the analysis of experimental data on the hinge moments of control surfaces due to tabs
No. Aero 1756 - A resumé of aerodynamic data on air brakes
No. B.A. 1544 - Some wind tunnel tests on brake flaps
No. B.A. 1658 - Brake flaps - recent wind tunnel tests on a complete model and on rectangular wings fitted with brake flaps
No. S.M.E. 336 - The allowable deflections of control surface panels

OTHER PUBLICATIONS

A.R.C. Reports

No. 3520 - Wind tunnel experiments on aerodynamic brakes
No. 5002 - D.F.S. dive control brakes for gliders and aeroplanes

CHAPTER 206

TAIL UNIT LOADS

Note.- The subject matter of this chapter has been completely revised with A.L.No.30 following J.A.C.Paper No.243. Requirements from Chapter 208 have been incorporated.

A

Amended by A.L.No.33

CHAPTER 206

TAIL UNIT LOADS

Introduction

1. The requirements of this chapter are applicable to all aeroplanes and are intended to cover the strength of the tailplane and elevator, fin and rudder, and rear fuselage as a whole. As far as present data permit each case is based on an actual flight condition, and the effect of each case throughout the structure shall be considered. The whole permissible range of flying weights and C.G. positions shall be covered in each case. The flight conditions represented by the stressing cases are:-

Symmetric flight
Yawed flight
Asymmetric power flight
Flight under automatic controls

Compressibility effects

2. The following assumptions regarding the effects of compressibility shall be made in every design case for which the Mach number does not exceed 0.8. For aeroplanes designed to Mach numbers exceeding 0.8 further design cases will usually be necessary. Reference should be made in such cases to the Director R.A.E. (S.M.E.Dept.) and A.T.N.No.150 contains relevant information. The assumptions which shall be made are as follows,-

(i) that the low speed values of C_{m_0} (see Chapter 201), excepting that part due to the propeller "fin" effect, are increased by the Glauert factor $1/\sqrt{1 - M^2}$,

(ii) that the low speed values for the slope of the normal force/incidence curve are increased by the compressibility correction factor given in Fig.1 of Chapter 200,

(iii) that the position of the aerodynamic centre may vary with Mach number (allowance for this should be made using the best available data).

3. A height of 10,000 ft. shall be assumed when evaluating the Mach number.

Factor

4. The tailplane and elevator, fin and rudder, and rear fuselage shall have an ultimate factor of at least 1.5 in each of the stressing cases of this chapter.

Symmetric flight

5. General.- The total tail load is made up of the balancing load together, where necessary, with a manoeuvring load, the whole being distributed equally between the two sides

Symmetric flight (cont'd)

of the tailplane. It may be assumed that no load acts on the fin and rudder in symmetric flight, except for the case of outboard fins and rudders where a load is induced by the tail load (see paragraph 28).

6. Balancing tail load.- The complete structure shall be designed for the tail load for balance corresponding to all points within or on the specified flight envelope, using the appropriate value of C_{mo}.

7. Manoeuvring tail load.- In addition to the case of paragraph 6, the balancing tail load at any point within or on the flight envelope shall be combined with a manoeuvring load acting in the direction appropriate to any manoeuvre within the flight envelope, and of magnitude sufficient to produce an angular acceleration in pitch of

$$\left(65 + \frac{3.5 \times 10^5}{W}\right) \frac{n}{V} \text{ rads/second}^2$$

where W ..... lb. ..... the all-up weight of the aeroplane or 7,000 lb., whichever is the greater.

n ..... has the highest positive value (from the flight envelope) corresponding to speed V.

V ... ft/sec.E.A.S. the appropriate speed.

The manoeuvring load acts downwards when the manoeuvre is one of increasing normal acceleration, and upwards when the manoeuvre is one of decreasing normal acceleration.

8. The manoeuvring load shall be assumed to be reacted entirely by pitching inertia of the aeroplane.

9. Minimum up load.- If the above cases give a maximum up load of less than three quarters of the maximum down load, then a further case shall be considered with an upload on the tailplane equal to three-quarters of the maximum down load. The aeroplane shall be assumed in the stalling attitude (Case A), any load in excess of the balancing load being reacted by pitching inertia of the aeroplane.

Yawed flight

10. General.- The tail unit and rear fuselage shall be designed for the loads arising when the aeroplane is flying yawed with rudder neutral at any speed between the maximum equivalent airspeed in level flight and the design diving speed. This produces a side load on the fin and rudder, a rolling torque on the tailplane, and also a change in the pitching moment

B

Yawed flight (cont'd)

coefficient. Apart from the yawing motion, straight and level flight (i.e. no pitching motion and constant forward speed) may be assumed. The fin and rudder loads and the rolling torque may be assumed balanced by inertia forces.

11. Angle of yaw.- The angle of yaw ψ_o, at maximum equivalent airspeed in level flight shall not be less than that given by,-

$$\psi_o = 0.7n_1 + \frac{1500}{V_M} \text{ degrees}$$

where n_1 ..... maximum normal acceleration coefficient

V_M ..ft/sec.. maximum equivalent airspeed in level flight

At all higher speeds, the angle of yaw ψ shall be such that the load on the fin and rudder remains constant, compressibility effects being included in the calculation.

12. In practice the angle of yaw achieved is linked with the directional stability of the aeroplane, and the minimum values given by the above formulae apply only to those aeroplanes with a value of n_v+ not less than 0.04. For aeroplanes having a value of n_v less than 0.04, the angle of yaw to be used shall be fixed after discussion with The Director R.A.E. (S.M.E.Dept.), who shall be informed of the final choice made.

13. Asymmetric distribution of tail load.- The balancing tail load shall be distributed asymmetrically between the sides of the tailplane to give a resultant rolling torque of,-

$$\frac{K\,f(M)}{2}\rho_o V^2 S_t b_t \psi \quad \text{... lb.ft.}$$

where K ..... a constant (see para.14)
V .. ft/sec. E.A.S... the appropriate speed
S_t ..... sq.ft. ..... tailplane and elevator area
b_t ..... ft. ..... tailplane and elevator span
ψ ..... degrees ..... angle of yaw
f(M) ..... as given in Fig.1 of Chapter 200.

Unless satisfactory wind tunnel evidence to the contrary is available, this rolling torque shall be taken as additive to the torque produced by the fin and rudder loads.

+ n_v is defined as the slope of the yawing moment coefficient/angle of sideslip, curve.

Yawed flight (cont'd)

14. Aerodynamic coefficients.- The low speed values of the relevant aerodynamic coefficients should be based on wind tunnel tests of the design, but in the absence of such data the following shall apply,-

(i) The normal force coefficient for the fin and rudder shall be based on the results of R.A.E. Report No. Aero.2011.

(ii) The low speed value of the pitching moment coefficient, C_{mo}, shall be increased by -0.0015 per degree of yaw.

(iii) The constant K (see paragraph 13) shall be taken as 0.0025.

15. Manoeuvring load.- No manoeuvring load need be added to the balancing tail load in yawed flight.

Asymmetric power flight

16. Multi-engined aeroplanes shall be designed to withstand the loads arising from the sudden cutting of any one engine. The aeroplane shall be considered in unaccelerated flight at any speed up to the design diving speed when any one engine on either side cuts suddenly. The loads resulting from this condition of flight shall be calculated, taking into account the dynamic effect which produces overswing beyond the normal yawed condition, and allowing a reasonable time before correcting rudder is applied.

17. In lieu of precise calculations the following stressing loads may be assumed. The aeroplane shall be assumed flying at any speed up to the design diving speed with the appropriate engine cut and the other engine(s) developing full take-off power when a load KP_y is applied to the fin and rudder. P_y shall be considered constant at all speeds and equal to the load required to trim the aeroplane at $1.3V_s$ with 10° of yaw (where V_s is the stalling speed appropriate to level flight with flaps or other landing devices not in operation). K is a constant depending on the directional stability of the aeroplane and having the following values,-

n_v	0.05 or less	0.05 to 0.10	0.10 or greater
K	3.0	Linear variation from 3.0 to 2.5	2.5

The drag of the propeller of the cut engine may be neglected.

18. The resulting fin and rudder load shall be considered in combination with the maximum balancing tail load; in the absence of better information the asymmetry due to yaw may be neglected.

Flight under automatic controls

19. The tailplane and elevator, and rear fuselage shall have an ultimate factor of not less than 1.5 under the conditions which would arise if, when initially trimmed for steady level flight at maximum equivalent airspeed for this condition, the elevator was suddenly deflected 5° up or down. If evidence can be produced to prove that failure of the automatic controls cannot result in a change of elevator angle as great as 5° , such smaller angle as can occur may be used. It is however recommended that the angle taken should in no case be less than 3°.

Flight in gusts

20. Reference should be made to Chapter 203 for tail-unit loads resulting from flight in gusts.

Stressing assumptions

21. Drag and inertia loads.- Drag loads and inertia loads appropriate to the flight condition shall be included. In lieu of precise calculations drag loads of one eighth of the loads normal to each surface, distributed similarly to the normal loads, are acceptable.

22. Spanwise load distribution.- The distribution of load across the span of the surface, irrespective of the chordwise load distribution, may be assumed proportional to the total chord, except in the case of horn balanced surfaces (see para.27) and that of tailplanes with outboard fins and rudders (see para.28).

23. Chordwise load distribution.- The load on the tailplane and elevator shall be distributed chordwise as shown in Appendix 5, Fig.1. The centre of pressure of the balancing load in symmetric flight is implicit in the flight attitude appropriate to the stressing condition; any load additional to the symmetric flight balancing load shall be assumed to act at the quarter chord point of the mean chord. In order to provide adequate torsional strength and also to cover manoeuvres other than those specified in the above stressing conditions, the most severe load shall also be considered acting with centre of pressure positions anywhere between the leading edge and the half chord of the mean chord of the tailplane and elevator.

24. The total load on the fin and rudder shall be calculated as if acting at the quarter chord point of the mean chord, but the most severe load shall be distributed as shown in Appendix 5, Fig.1, with centre of pressure positions anywhere between the leading edge and the half chord of the mean chord of the fin and rudder.

25. Leading edge loads.- To ensure adequate strength under high leading edge loads, the most severe tailplane and fin loads shall be further considered as being increased by 50%

Stressing assumptions (cont'd)

over the leading 10% of the chord with the loads aft of this appropriately decreased to retain the same total load.

26. The most severe elevator and rudder loads shall be further considered as being distributed parabolically from 3 times the mean loading at the leading edge to zero at the trailing edge.

27. Horn balanced surfaces.- Where the elevator or rudder has a horn balance, the load distribution may be considerably altered. Loads obtained from wind tunnel tests shall be used when available but in the absence of these the spanwise loading proportional to the chord shall be increased by 50% over the sections covered by the horn balance, the spanwise loading elsewhere being decreased appropriately. The chordwise loading shall remain unaltered.

28. Tailplanes with outboard fins and rudders.- For tailplanes with outboard fins and rudders at or near the tips of the tailplane, allowance shall be made for the effect of the spanwise load distribution along the tailplane and also for the loads induced on the fins and rudders by the tailplane load. The relevant spanwise load distributions are given in Appendix 5.

AP 970 Design Requirements for Aeroplanes AL25-37-19460801 OCR.pdf

RELEVANT M.O.S. PUBLICATIONS

Airworthiness Technical Notes

No.136 - Elevator tab loads
No.144 - C.P. position of tailplane loads
No.150 - Stressing with compressibility

R.A.E. Reports

No. Aero 2011 - An analysis of the lift slope of aerofoils of small aspect ratio, including fins with design charts for aerofoils and control surfaces
No. A.D. 3121 - Strength consideration arising from the use of elevator trimming tabs
No. S.M.E. 336 - The allowable deflections of control surface panels

CHAPTER 207

CONTROL SYSTEMS

A

CHAPTER 207

CONTROL SYSTEMS

1. Introduction

1.1 Unless otherwise specified the requirements of this chapter apply to the control systems of all aeroplanes and shall be met over a range of temperatures (as given by App.6) from that at ground level to the minimum value at the service ceiling of the aeroplane when operating at the lightest practicable weight.

2. Circuits

2.1 Efficiency

2.1.1 Every effort should be made to keep the efficiency of the control circuits as high as possible and the effect of ice accretion should be taken into account. Cable runs shall be as straight as possible and their effective length should not change during the operation of the controls. Back lash should be at a minimum.

+ 2.2 Static operating force

2.2.1 Except on power operated circuits the force required on the hand wheel, hand grip, or rudder pedal to overcome static friction in the relevant flying control circuit, when measured with the standard spring balance (Stores Ref.21C/2165), shall not exceed the value indicated in Table 1.

2.2.2 This limiting force, or preferably, some lower figure chosen by the designer as appropriate to the type, shall be shown on the drawings with a suitable note for inspection purposes.

2.3 Cable operated systems

2.3.1 In the case of cable operated systems the initial tension$^{\phi}$ at which, at normal hanger temperatures, each control circuit should be rigged shall be stated on the appropriate drawings for inspection purposes. The requirements of para.2.2.1 for static friction shall be met at the correct rigging tension.

2.4 Information for Aircraft Handbook

2.4.1 The information on correct rigging tensions and on allowable friction limits shall be included in the relevant Aircraft Handbook.

+ From J.A.C.Paper No.293.

ϕ The cable tensions may be measured by means of the R.A.E. Control Cable Tensionmeters, Stores References, IC/6134, IC/6135 or IC/6136.

Circuits (cont'd)

2.5 Strength

2.5.1 Each circuit shall have an ultimate factor of at least 1⅓ under the loading conditions given in paras.2.6, 2.7 and 2.8. The loads shall be applied in each case at the point at which the pilot would normally apply the force.

2.6 Elevator control

(i) A pull or push of 150 lb. on the top of the control column.

(ii) A pull or push of 100 lb. applied at one end only of the horizontal diameter of the handwheel.

2.7 Aileron control

(i) A side load of 75 lb. on the top of the control column.

(ii) A tangential force of 75 lb. on the rim of the handwheel.

2.8 Rudder control

(i) A push of 300 lb. on one side of the rudder bar.

(ii) A simultaneous push of 180 lb. on each side of the rudder bar.

3. Differential contraction

3.1 Control circuits

3.1.1 The control circuits as a whole shall not suffer any appreciable slackening or tightening due to differential contraction over the temperature range of para.1.1.

3.2 Detail fittings

3.2.1 Sufficient clearance shall be provided to ensure the efficient operation of all detail fittings such as jacks, bearings, guides, fairleads, etc. over the temperature range of para.1.1. Cold chamber tests shall be carried out when necessary.

4. Effects of moisture

4.1 It shall be checked that the clearances provided

AP 970 Design Requirements for Aeroplanes AL25-37 19460801 OCR.pdf Page 167

are sufficient to ensure efficient operation of the controls under all conditions of humidity. Wherever possible, materials which expand appreciably with moisture should be avoided for such parts as fairleads and washers.+

5. Dual control

5.1 When dual control is installed, the requirements of para.2.5 will apply, and, in addition, the loads shall be considered as being applied by both pilots simultaneously in opposite senses. Similarly the components of the control system between the two pilots shall have an ultimate factor of at least $1\frac{1}{3}$.

6. Stops for control surfaces

6.1 The range of movement of the elevator, aileron, flap and rudder control surfaces, and also the movement of trimming devices associated with them, shall be limited by resilient stops which are robust and positive so that in no circumstances will the control surfaces jam or foul parts of the aeroplane. The stops shall incorporate shock absorbers to prevent damage occurring to the structure from snatch loads during taxying, unless other approved means of eliminating these loads are provided.

6.2 Aileron trimming tabs shall have a positive stop fitted so that it is impossible to adjust the tab below its standard setting.

7. Spring tabs

7.1 If spring tabs or any other means are employed to obtain lightness of the main flying controls, the design shall be such that it will not be necessary for the pilot to exercise any unusual degree of restraint in order to ensure freedom from structural troubles. The use of reliable safety devices limiting the control operation under appropriate conditions is an acceptable means of meeting this requirement.

8. Stressing details

8.1 In calculating the strength of a control system the loads should be carried through from the cockpit to the attachment, on the fixed portion of the aerofoil, of the lever or rod nearest the control surfaces. The control surface itself will be designed for the specified aerodynamic loads.

+ See Airworthiness Technical Note No.120.

8.2 Where mechanism giving a variable gear ratio forms part of the transmission system, the strength of the system shall be calculated with the mechanism under the most adverse conditions.

9. Automatic pilot mechanism

9.1 When an automatic pilot is fitted the mounting of the instrument to the structure of the aeroplane and of the pilot system itself shall have an ultimate factor of at least $1\frac{1}{3}$ under whichever is the more severe of the following two conditions,-

(i) The greatest force which the apparatus can apply (specified on the S.I.S.), and

(ii) The force exerted by the pilot from the cockpit (see paras.2.6, 2.7 and 2.8) carried through to the servo motor stops.

10. Vulnerability

+ 10.1 Trimmers

10.1.1 Whenever practicable, the control services to the three main flying controls and their trimming devices shall be so arranged that in the event of a main control circuit being rendered inoperative by enemy action or other cause, full use of the trimmers will be available to provide a measure of emergency control of the aeroplane.

10.2 Servo controls

10.2.1 When a servo control surface is fitted the control system shall be arranged so that, in the event of the servo surface being rendered inoperative by enemy action or other cause, it will be possible to retain some measure of control over the aeroplane by direct operation of the control surface concerned.

+ From J.A.C.Paper No.261.

TABLE I

CONTROL CIRCUITS - STATIC OPERATING FORCE

Class of aeroplane	Maximum force (lb)		
	Elevator	Aileron	Rudder
All fighters, and other types up to 10,000 lb.	4	2	6
All types between 10,000 lb. and 50,000 lb. Except fighters and heavy bombers.	values obtained by linear interpolation		
All heavy bombers, and other types over 50,000 lb.	10	8	10

AP 970 Design Requirements for Aeroplanes AL25-37 19460801 CCR.pdf Page 1 of 1

RELEVANT M.A.P. PUBLICATIONS

Specifications

No.D.T.D.1080 - Electric remote throttle controls for aircraft engines

Airworthiness Technical Notes

No.120 - The design of control systems for efficient operation at low temperatures
No.146 - Tab gear design
No.149 - The prevention of flutter of spring tabs

R.A.E. Reports

No. Aero. 1972 - Spring tab controls - Notes on development to date, with special reference to design aspects

R.A.E. Technical Notes

No. Aero. 1173 - Note on friction in control circuits
No. S.M.E.86 - Alternative bearings for control circuits

CHAPTER 208

SPINNING AND SPIN RECOVERY

Note.- The subject matter of this chapter was dealt with in Chapter 202 prior to A.L.No.30. The present chapter is issued following J.A.C.Paper No. 223. Requirements previously in Chapter 208 and still in force have been transferred to Chapters 206 and 207.

A

CHAPTER 208

SPINNING AND SPIN RECOVERY

Introduction

1. This chapter states design and strength requirements for spinning, including entry into and recovery from the steady condition. The requirements are applicable to all aeroplanes which are spinnable excepting those aeroplanes,-

(i) above 30,000 lb. maximum design take-off weight, or

(ii) having n_1 less than 4.6.

(Chapter 104 states which aeroplanes should be spinnable and which should not).

2. The flight conditions which form the basis of the requirements apply to the whole aeroplane structure, but some relaxation is allowed on the loading conditions which need be considered (see para.10). The flight conditions will usually give critical lateral loads for attachments of masses outboard on the wings (e.g. engines, tanks, guns, ailerons, etc.) but should be considered for any parts of the structure which may be affected including particularly the region of the wing root and centre section.

Strength in the spin

3. Factor.- The whole aeroplane shall have an ultimate factor of not less than 1.5 under the loads arising during a spin and during entry and recovery therefrom. The usual proof factor requirement shall be met in the case of primary and secondary trainers, and single seat fighters, but need not be met on other types.

4. Rate of rotation.- The rate of rotation (Ω_s) used for strength calculations shall be based on the best available data and this should include results of full scale spinning tests on a closely similar type, or model tests of the actual design. Suitable allowance shall be made for the number of turns required (see Chapter 104), and for varying methods of entry into the spin,+ except that entry from a flick roll need not be considered. This allowance shall apply whether the steady rate of rotation is obtained from the formula of para.5 or from other sources; and in the case of primary and secondary trainers, and single seat fighters, it shall be at least equivalent to a 15% increase on the steady rate of rotation.

5. In the absence of any direct experimental support the rate of rotation used in strength calculations shall not be lower than

---

+ R.A.E. Technical Note No.Aero 1317 gives advice on this.

$$\Omega_s = \frac{24\sqrt{w}}{b} \text{ radians per second}$$

where w ..... lb/ft^2 ..... wing loading
b ..... feet ..... wing span

If these values are used for the initial design the calculations shall be repeated on the basis of the rate of rotation obtained from model tests, at the earliest practicable date.

Recovery standard

6. Flight test results, when available, will be regarded as the final evidence of an aeroplane's characteristics as regards spinning and recovery. Details of the flight tests required are given in Chapter 910; but to give the M.A.P. advance information on the likely spinning characteristics of the aeroplane, to ensure a reasonable probability of satisfactory full scale behaviour where this is important, and to enable advance information to be given to the Service in other cases, the following requirements regarding design criteria and model tests shall be met.

Design criteria for recovery from spin

7. The recovery criteria shall be evaluated by the method given in Airworthiness Technical Note No.151 and the results reported to The Director, R.A.E. (Aero Dept.) for information. (No general qualitative requirement is at present stated).

Model spinning and recovery tests

8. Spinning tests shall be done at an early stage on a representative scale model, and the test technique shall be as described in R.A.E. Report No. Aero 1820. The tests shall demonstrate the ability of the model to recover from spins in either direction under conditions appropriate to an altitude of 10,000 feet for primary trainers and 15,000 feet for other types. This recovery shall be against an applied yawing moment of 17 units for primary and secondary trainers and single seat fighters and against a value for other types which will be settled at the model test stage.

9. The Contractor shall provide the drawings and data necessary for the construction of the model at R.A.E. to detail requirements which will be supplied by The Director, R.A.E. (Aero Dept.).

Loading conditions

10. The spinning condition need not be considered for the attachments of any of the following items of load,-

(i) external drop tanks,
(ii) bombs and other armament stores.

B

RELEVANT M.A.P. PUBLICATIONS

Airworthiness Technical Notes

No. 151 - Design criteria for spin recovery

R.A.E. Reports

No. Aero. 1820 - The difference between model spinning and full scale

R.A.E. Technical Notes

No. Aero. 1317 - Notes on rates of turning in the spin of twin-engined types

PART 3
STRUCTURAL STRENGTH AND DESIGN FOR LAND AND WATER

(8123) T14097/2692 500 1/44 M46506 C & P 752

AP 970 Design Requirements for Aeroplanes AL 25-37 19460801 OCR.pdf

Part 3

Structural strength and design for land and water

CONTENTS

Chapter 300	
Chapter 301	Design of alighting gear - Landplanes
Chapter 302	Design of float undercarriages
Chapter 303	
Chapter 304	Alighting and take-off - Tail wheel type undercarriage
Chapter 305	Alighting and take-off - Nose wheel type undercarriage
Chapter 306	Alighting and take-off - Seaplanes
Chapter 307	Catapulting, accelerating, and rocket assisted take-off
Chapter 308	Deck landing
Chapter 309	Crash landing
Chapter 310	Ground handling
Chapter 311	Picketing and mooring

CHAPTER 301

DESIGN OF ALIGHTING GEAR - LANDPLANES

CHAPTER 301

DESIGN OF ALIGHTING GEAR - LANDPLANES

1. Introduction

1.1 The requirements of this chapter are applicable to the design of alighting gear for landplanes. This comprises,

(i) the main undercarriage units (i.e. those taking the major part of the weight of the aeroplane), and

(ii) the auxiliary units (i.e. the nose wheel unit or the tail wheel unit).

The requirements are written on the basis of the alighting gear being retractable. When fixed alighting gear is employed requirements which are not applicable may be disregarded.

2. Alighting gear characteristics

2.1 The wheel track, energy absorption (both for impact and rebound) and the position of the wheels in relation to the centre of gravity of the aeroplane shall be such as to ensure stability and safety in a fast landing on uneven ground. (See Chapter 304).

2.2 The alighting gear design shall be such that, with brakes applied and wheels unchocked, the aeroplane does not nose over when any one engine is run up to maximum continuous power.

2.3 The aeroplane shall be capable of taxying satisfactorily in any direction in winds of speeds up to 0.4 of the stalling speed with flaps down or 20 knots whichever is the greater.

2.4 The alighting gear design shall be such that the take-off and landing requirements of Chapter 601 can be met.

2.5 The design of both main undercarriage and auxiliary units shall be such that damage to the tyre, wheel or alighting gear will not result from,-

(i) repeated two-point or three-point landings during which the maximum design value of wheel reaction (i.e. that corresponding to the specified vertical velocity of descent) is developed, or

(ii) taxying over a bumpy surface under take-off and reinforcing take-off conditions.

3. Wheels and tyres

3.1 On all R.A.F. aeroplanes, unless otherwise agreed in writing by P.D.T.D., the wheel and tyre sizes for both main and auxiliary units shall be chosen so that,-

(i) the tyre pressure will not exceed 70 lb/sq.in. when the aeroplane is in the normal attitude of rest and at the maximum design take-off weight, and

(ii) the requirements of para.2.5 are met.

3.2 The requirement of 3.1(i) above shall be met with a static tyre deflection not exceeding that approved by the tyre manufacturer as likely to give a reasonable service life for the tyre; this deflection shall not in any case exceed 35%.

3.3 The wheel and tyre shall be such that pressures up to 80 lb/sq.in. can safely be used if, in service, overloading of the aeroplane beyond its design weight makes this desirable .

3.4 On all aeroplanes the tail wheel or nose wheel shall be fitted with an approved type of electrically conducting tyre.

4. Wheel brakes

4.1 The wheel brake controls shall be designed so that the pilot can apply the brakes on port and starboard sides in unison and with equal power, and also independently of each other for steering purposes. For the latter purpose pedals operated by the heel shall be avoided.

4.2 The wheel brakes shall be such that the braking effect is increased or decreased continuously as the force applied on the brake control is increased or decreased. The brakes shall cease to act instantly when the force is removed from the brake control.

4.3 The system employed for operating the brakes shall be easy to adjust and maintain and shall not be such as to require frequent attention. Adequate access shall be provided to all parts which require adjustment, maintenance and inspection.

4.4 The brake operating gear shall comply with the strength requirements for control systems (see Chapter 207), as far as those requirements are applicable.

4.5 A parking brake shall be provided and shall be capable of holding the aeroplane when, with the wheels on a hard surface and unchocked, any one engine is run

B

up to maximum continuous power. The control may be separate from the main control.

5. Castoring

5.1 Nose wheel units and tail wheel units shall be capable of castoring in turns of small radius (including turns with one main wheel as centre) at all wheel loads up to the maximum value of load P as defined in paras. 6.2 and 6.3. The following castoring angles shall be provided,-

(i) on tail wheel units: 360° with continuous rotation, and

(ii) on nose wheel units: an angle such that the aeroplane may be turned about one main wheel as centre.

5.2 The wheel shall return to its correct landing position when the load is removed. When a retractable unit is provided the wheel shall return to its mid-position with sufficient rapidity to prevent interference with retraction.

5.3 Wheel castoring locks+

5.3.1 Tail wheel castoring locks, if fitted, shall be under the control of the pilot, who shall be able to engage or disengage the lock by one operation of the control at all wheel loads up to the maximum value of the load P as defined in paras.6.2 and 6.3. The lock shall be so arranged that it cannot lock the wheel in any position other than the mid-position, and when engaged there shall be no back-lash or idle motion.

5.3.2 Nose wheel castoring locks are not acceptable.

6. Suppression of shimmy

6.1 Oscillations about the castoring axis (known as "shimmy") shall be suppressed at all wheel loads up to a maximum load P, and at all forward speeds up to a maximum speed V, where P and V are defined in paras.6.2 and 6.3.

6.2 Tail wheel units

6.2.1 When a tail wheel unit is fitted the following cases shall be considered. If the unit is provided with a castoring lock, however, Case A may be

+ See A.T.N. No.153

Suppression of shimmy (cont'd)

omitted and Case B shall be considered with the castoring lock disengaged,-

Case A .. P .. the greatest static reaction at the wheel on level ground with the most adverse combination of c.g. position and weight of aeroplane up to the maximum permissible landing weight.

V .. the stalling speed corresponding to the maximum permissible landing weight, with flaps down and engine off.

Case B .. P .. the greatest static reaction at the wheel on level ground with the most adverse combination of c.g. position and weight of aeroplane up to the maximum permissible take-off weight.

V .. 30 knots.

6.3 Nose wheel units

6.3.1 When a nose wheel unit is fitted the following cases shall be considered,-

Case C .. P .. the greatest static reaction at the wheel on level ground when the maximum braking forces are applied to all braked wheels with the most adverse combinations of c.g. position and weight of aeroplane up to the maximum permissible landing weight.

V .. the stalling speed corresponding to the maximum permissible landing weight with flaps down and engine off.

Case D .. P .. the greatest static reaction at the wheel on level ground with the most adverse combination of c.g. position and weight of aeroplane up to the maximum permissible take-off weight.

V .. the stalling speed corresponding to the maximum permissible take-off weight with flaps in their take-off position and with engine on.

6.4 Twin contact tyres

6.4.1 Provision shall be made to allow for the correct operation of the tail wheel unit with a twin-contact tyre of suitable pressure fitted, so that, should shimmy occur, a twin-contact tyre can be fitted without any modification, other than wheel change, being necessary. C

7. + Retraction and lowering

7.1 General

7.1.1 The requirements of this and subsequent paragraphs shall be met at the standard weight of the wheel, tyre, and brake assembly, and also with an addition of not less than 25% of that weight, thus allowing at least 25% margin for subsequent increases in weight of the assembly, and for the effect of mud and ice accretion.

7.2 Basic requirements

7.2.1 Under the most adverse flight conditions occuring within the ranges of para.7.3, operation shall be completed automatically after selection of the relevant control position, without further attention from the pilot, and the time of operation shall comply with the requirements of para.7.4.

7.3 Flight conditions

7.3.1 Retraction.- The aeroplane shall be considered at any flight speed between 1.2 V_{sf} and 1.5 V_{sw_2} under any acceleration normal to the flight path between 0.8g and 1.3g and in the most adverse attitude obtainable within this range of conditions. The engine speed shall be taken as that applicable when the engine is developing maximum take-off power.

7.3.2 Lowering.- The aeroplane shall be considered at any flight speed between 1.2 V_{sf} and 1.5 V_{sw_1} under any acceleration normal to the flight path between 0.8g and 1.3g and in the most adverse attitude obtainable within this range of conditions. The engine speed shall be taken as 80% of the lowest engine speed appropriate to level flight at 1.2 V_{sw_1}.

7.3.3 Notation.- The symbols used in the flight conditions of paras.7.3.1 and 7.3.2 are defined as follows.-

V_{sf} ..... is the stalling speed, engines off at maximum design landing weight with flaps down,

V_{sw_1} ..... is the stalling speed, engines on at maximum design landing weight with flaps retracted,

V_{sw_2} ..... is the stalling speed, engines on at maximum design take-off weight with flaps retracted.

+ From J.A.C. Paper No.234.

Retraction and lowering (cont'd)

7.4 Times of operation

7.4.1 The time of operation, from the selection of the relevant control position to the locking of the alighting gear in the fully retracted or the safe landing position, shall be as short as practicable consistent with no excessive change of trim occurring and the paramount need for simplicity and reliability of operation. The following times are, however, recommended as maxima under the relevant conditions of para.7.3.

Aeroplane type	Retraction (secs.)	Lowering (secs.)
Deck landing aeroplanes	5	5
Single seat fighters	10	15
All others	25	30

7.5 Operation under excessive accelerations

7.5.1 When the alighting gear is being retracted or lowered under the appropriate flight speed and engine speed conditions of para.7.3 the operating mechanism shall be able to withstand any acceleration which can occur at the flight speed under consideration. If the movement of the alighting gear is arrested under excessive accelerations it shall recommence as soon as the acceleration conditions are within the ranges given in para.7.3, and the operation shall then be completed automatically without further attention from the pilot.

7.6 Operation as air brake

7.6.1 To enable the main undercarriage unit to be used as an air brake, the lowering mechanism, except on single engined fighters, shall be capable of lowering the undercarriage quickly and far enough to produce an appreciable deceleration of the aeroplane when initially in steady flight at a speed of not less than 2 V_{SW_2}. The maximum aeroplane speed at which the undercarriage can be lowered with safety and also the maximum speed at which the aeroplane can be flown with the undercarriage lowered, shall be determined and suitable instructions based on these figures shall be included in the Pilot's Notes.

7.6.2 After being used as an air brake the undercarriage shall follow the movement of the selector lever in the usual way, though not necessarily until the aeroplane comes within the speed range of para.7.3, as appropriate. D

Retraction and lowering (cont'd)

7.7 Emergency operation

7.7.1 An emergency system of lowering the alighting gear shall be provided and shall be such that it can be operated in the event of a failure of the normal system. The control of the emergency system shall be as simple as possible and shall consist at the most of the use of an emergency control and the normal selector lever. (This does not preclude subsequent completion of lowering by manual power).

7.7.2 The emergency system shall be such that when the pilot performs correctly the appropriate actions for lowering the alighting gear by the emergency method, the operation of lowering will proceed to completion irrespective of what actions (correct or otherwise) the pilot may have made previously with the normal selector lever. With the emergency system acting alone the alighting gear shall lower under the most adverse combination of the flight conditions of para.7.5. The time for lowering shall be as near the normal time as possible but where there is difficulty in meeting this requirement (e.g. when manual operation is involved) the Contractor shall submit his proposals to M.O.S.(R.D.I.) for consideration.

7.7.3 An emergency system which requires re-setting after each operation is acceptable. If either compressed gas or combustible cartridges are used for the emergency power supply, then the location of all cartridges, compressed gas bottles and all pipes and components through which products of combustion pass shall be such as to minimise the risk of contamination of the cockpit or the crew's quarters, both when the system is operated and if it is damaged.

7.8 Up and down locks

7.8.1 Unless the operating mechanism is irreversible, positive locks shall be provided,-

(i) to hold the main undercarriage (and nose wheel unit when fitted) both in the safe landing position and in the fully retracted position, and

(ii) to hold the tail wheel unit in the safe landing position.

7.8.2 The locks shall be such that they are maintained in engagement by mechanical means. Locks which are kept in engagement by trapped hydraulic fluid are not acceptable. It is recommended that the locks

Retraction and lowering (cont'd)

should be automatically and simultaneously released when the appropriate control is moved.

7.8.3 It shall be impossible to retract the alighting gear whilst it is taking the weight of the aeroplane.

7.9 Indicators

7.9.1 Visual indicators shall be provided and shall be arranged as follows,-

(i) a green lamp for each retractable unit to be alight only when that unit is in the safe landing position and the locks are properly engaged,

(ii) a red lamp for each retractable main undercarriage unit (and nose wheel unit when fitted) to be alight only when the appropriate leg is neither locked down nor locked up,

(iii) a red lamp for the tail wheel unit to be alight only when the unit is neither locked down nor is in a fully retracted position, and

(iv) either, one additional red lamp (when an audible warning device is a requirement) to be alight when the audible device should operate, or a flashing red light, according to the requirements of Chapter 103.

7.9.2 Approved indicators only shall be employed and shall be installed in conformity with the relevant S.I.S. The installation shall be such that flickering of the lights during manoeuvres accompanied by acceleration, or inadvertent operation of the warning devices is not possible.

8. + Undercarriage doors

8.1 Provision shall be made so that, under all possible flight conditions, the undercarriage doors will be held firmly shut with no possibility of even partial opening at their leading edges.

9. Strength

9.1 When locked in the safe landing position, the alighting gear shall comply with the general strength

+ From A.D.M.560

Strength (cont'd)

requirements for landing, take-off, etc. given in the appropriate chapters.

9.2 When locked in the fully retracted position the alighting gear and doors shall have the same standard of strength for flight conditions as that specified for the aeroplane as a whole.

9.3 The alighting gear and doors and their operating mechanisms shall have an ultimate factor of at least 2.0 under any conditions arising when operated as in paras.7.2 and 7.3 and also 7.6 and 7.7, and a factor of at least 1.5 under the conditions of para.7.5. The cases considered shall include the most adverse combination of acceleration, aerodynamic forces and position of the alighting gear and doors which can occur under the appropriate conditions.

9.4 Braking during retraction

9.4.1 An additional case shall be considered under the conditions of para.7.3.1. The effect of the application of the maximum possible braking torque during retraction shall be investigated at all positions of the alighting gear between "locked-up" and "locked-down".

9.4.2 The design of the alighting gear shall be such that, under the loads arising from the most adverse combination of acceleration, aerodynamic forces, position of the alighting gear, and wheel brake torque during retraction, permanent deformation of the alighting gear will not occur, nor will its correct operation be impaired.

9.4.3 A device, to reduce the maximum possible braking torque during retraction to a value which will ensure that the requirements of para.9.4.2 are met, is acceptable if,-

(i) the brake torque cannot be reduced when the wheels are on the ground, and

(ii) the brake torque available during retraction will ensure that the wheel speed will not introduce serious vibrations.

10. Tests

10.1 Functioning tests

10.1.1 Every new design of retractable unit shall, prior to taxying trials, undergo

the tests given in the following paragraphs. Under these tests the times of operation from selection of the appropriate control position to locking in that position shall be noted and recorded in the Type Record.

10.1.2 The power supply for these tests shall be identical to that used in flight.

10.1.3 With the aeroplane jacked off the ground using the correct service equipment in the correct positions, the alighting gear shall be retracted and lowered twenty-five times, locking in the fully retracted and the safe landing position being effected each time. The emergency lowering system (or each system, if there are more than one) shall be operated at least twice during the tests. If a device is fitted to limit the wheel brake torque during retraction in accordance with the conditions of para.9.4.3, then wheel brakes shall be applied during ten of the tests and the correct functioning of the device verified by brake pressure gauge readings.

10.1.4 The aeroplane shall be jacked off the ground with the jacks placed so as to deflect that part of the wing affecting the operating of the main undercarriage to an extent comparable with the most adverse deflections occurring within the range of conditions specified in para.7.3.1. The undercarriage shall be loaded to represent the most adverse loading covered by the conditions of para.7.3.1 over as great a travel as possible. With the alighting gear initially locked in the safe landing position, it shall be retracted and locked in the fully retracted position twenty-five times under these conditions. Five of these tests shall be made to cover the conditions of paras.7.5 or 7.6, whichever is the more severe, by the sudden application of an appropriate external load. It shall be checked that, if the movement is stopped, retraction or locking proceed as soon as the extra load is removed.

10.1.5 All tests of para.10.1.4 shall be repeated using the most adverse conditions of para.7.3.2 in lieu of those of para.7.3.1 and commencing the tests from the fully retracted position. In addition the emergency system shall be operated at least five times under the most adverse conditions of para.7.3.2, and also five times under the most favourable conditions, to ensure that movement of the alighting gear is not so rapid as to damage the alighting gear or structure, or to cause it to bounce away from the locks.

F

10.1.6 During the tests given above the operator shall ensure that the alighting gear is hard against its stops at the limiting positions, using the full available force to effect this. The locking devices shall be examined under each test condition to ascertain that the locks when acting alone will retain the alighting gear, particularly when possible structural deflections due to acceleration are taken into account.

10.2 Centring of the auxiliary unit

10.2.1 With the auxiliary unit jacked off the ground, tests shall be made to verify compliance with the requirements of para.5.2.

RELEVANT M.O.S. PUBLICATIONS

Aircraft Design Memoranda

No.275 - Approval procedure for simple parts and accessories

Standardisation Design Memoranda

No.17 - Warning horns
No.18 - Standardisation of air charging valves
No.44 - Pneumatic system brake relay control valves
No.47 - Undercarriage position indicators for aircraft (excluding amphibians)
No.75 - Lock solenoids

Airworthiness Technical Notes

No.103 - Effect of structural deformation on the assembly and strength of undercarriages
No.118 - The suppression of shimmy by friction damping
No.132 - Shock absorber recoil
No.134 - Maintenance of landing gear
No.137 - Importance of undercarriage design and wheel setting in the reduction of tyre wear
No.152 - The use of nosewheel brakes on tricycle landing gear
No.153 - The design of tailwheel castoring locks
No.161 - Duration of excessive accelerations during retraction and lowering of undercarriages

R.A.E. Reports

No. S.M.E. 3195 - Prevention of castor shimmy by double tread tyre
No. S.M.E. 3202 - A simplified general theory of wheel shimmy

CHAPTER 302

DESIGN OF FLOAT UNDERCARRIAGES

Note.- The subject matter of this Chapter was previously contained in Specification D.T.D.1016.

FS/36

CHAPTER 302

DESIGN OF FLOAT UNDERCARRIAGES

Introduction

1. The requirements of this Chapter cover the design of main floats and their supporting structure.

Buoyancy

2. The standard of buoyancy and stability required will be specified individually for each new design. Pending the issue of general requirements reference should be made to Aero and S.M.E. Depts. R.A.E. in the early stages of the design.

3. The floats shall be divided into water-tight compartments by means of bulkheads. The capacity of these compartments shall be such that the seaplane will float with positive stability when any two adjacent compartments are flooded.

4. Drain plugs shall be fitted in each water-tight compartment in such positions that the compartment will drain completely, both when the aeroplane is mounted on the catapult loading bogie and when it is standing on the handling trolley, tail down.

Attachments

5. The struts for the attachment of the main float(s) to the fuselage may be designed to provide either:-

(i) A rigid connection between fuselage and float(s)

or

(ii) The incorporation of shock absorber members.

In either case the float(s) shall be detachable from the undercarriage struts without dismantling other parts of the undercarriage.

Shock absorbtion

6. Where a shock absorber system is fitted the travel of the shock absorbing mechanism must be adjustable; the means of adjustment shall be controllable from the pilot's cockpit and shall permit the shock absorber being locked.

7. In the case of Naval aeroplanes, it is desirable that the undercarriage should incorporate rubber shock absorbers with an initial compression corresponding to a load of 1.5 x the

specified take-off weight on the undercarriage. Provision shall be made for a travel of approximately 1.5 inches. Control and locking devices will not be required.

Interchangeability

8. The construction of main floats shall be such that they will be directly interchangeable, except for any external detachable fittings.

9. Where considerable improvement in performance could be obtained by the use of handed floats the D.T.D. will consider a concession on this requirement.

Cover plates

10. Removable panels of dimensions not less than 18" x 12", with a hand-hole $7\frac{1}{2}$" diameter, shall be incorporated in the upper part of the shell of each float. The hand-hole covers shall be of quick release type. The number and positions of the panels shall be such that all parts of the float interior may be reached without difficulty to enable repair and maintenance work to be done.

Rubbing strip

11. A rubbing strip shall be fitted on each main float along the keel of the fore-body, to which it shall be secured by deep countersunk rivets. Where floats are made of alclad or duralumin, the rubbing strip shall also be of this material and shall be $\frac{1}{8}$" thick and not less than 1" wide. Particulars of the material and dimensions required in other cases may be obtained on application to D.T.D.(R.D.S.2).

12. A detachable rubbing pad shall be fitted at the heel of each stern post.

Rudder

13. An efficient water rudder complete with actuating mechanism, shall be fitted to each main float. The control for rudders of the dropping type shall be fitted where it will be easy to operate from the pilot's seat.

Stowages

14. In the case of a twin float system a detachable water-tight box, with a hinged water-tight cover having a quick locking device, shall be fitted inside each main float in a position where the anchor can be handled safely while the propeller is turning. (This position should, if possible, be immediately aft of the

AP 970 Design Requirements for Aeroplanes AL25-37 19460801 OCR.pdf

front boom. One box shall be suitable as a stowage for an anchor in accordance with S.I.S.377 and 20 fathoms of Manilla hemp rope, and the other as a stowage for a sea anchor to S.I.S.377, Sheet 7, and a boat hook to S.I.S.377 Sheet 3 with 10 feet of rope; a 'C' clip stowage shall be provided in the latter box for the shackle called for in S.I.S.377, Sheet 5.

15. In the case of a single float system, one or two boxes (whichever number is the more suitable) shall be provided to accommodate the above-mentioned equipment.

External fittings

16. Handling trolley.- A cross tube shall be built into the main float(s) to provide for a handling trolley in accordance with S.I.S.377, Sheet 8, being fitted thereto. Locking brackets, also in accordance with S.I.S.377, Sheet 8, shall be fitted so that they are flush with the float surface.

17. Towing bridle.- A towing bridle in accordance with S.I.S.377, Sheets 5 and 6 shall be attached to the float(s), and so disposed that it will be ready for immediate use. On a twin float system the fastenings shall be such that the cable may be detached with one hand by a person standing on one of the floats.

18. Hand rail.- A hand rail in accordance with S.I.S.377, Sheet 4 shall be provided at the rear end of the fuselage.

19. Anchor.- A fitting for the attachment of a sea anchor shall be provided at a suitable point on the fuselage.

RELEVANT M.A.P. PUBLICATIONS

R.A.E. Reports

No.Aero.1759 - Tank tests on a number of wing tip floats for flying boats.

No.B.A.1568 - Tank tests on water rudders for float seaplanes.

CHAPTER 304

ALIGHTING AND TAKE-OFF

TAIL WHEEL TYPE UNDERCARRIAGE

Note.- The subject matter of this chapter is from J.A.C. Paper No.147. Amendments made by A.L.32 are from J.A.C. Paper No. ~~255~~.

Amended by A.L.No.32

CHAPTER 304

ALIGHTING AND TAKE-OFF

TAIL WHEEL TYPE UNDERCARRIAGE

Introduction

1. The requirements of this chapter are applicable to all aeroplanes having two non-castoring main undercarriage units and a tail wheel unit, provided that the latter does not carry more than 20% of the total aeroplane weight under static conditions, except that in the case of deck landing aeroplanes the requirements of Chapter 308 take precedence. Requirements for aeroplanes with more heavily loaded tail wheels should be discussed with The Director, R.A.E. (S.M.E.Dept).

General

2. The applicability of the requirements for main wheel undercarriage units to tricycle landing gear is stated in Chapter 305. The requirements for main undercarriage units are based on the following aeroplane weights:-

W_1 ... maximum weight for landing

W_2 ... maximum weight for take-off

W_4 ... Overload take-off weight for reinforcing flights+

Both W_1 and W_2 will be defined in the Aeroplane Specification, W_4 will only apply when defined in the Aeroplane Specification or when stated at a later date.

3. The requirements for tail wheel units are based on loads R_1, R_2 and R_4 which are the greatest static vertical reactions at the tail wheel, when the aeroplane is standing on level ground with the most adverse practicable combination of C.G. position and aeroplane weight up to and including W_1, W_2 and W_4 respectively.

Energy absorption

4. Vertical velocity.- The energy absorption requirements shall be complied with at a vertical velocity of descent of 12 ft/sec. for main undercarriage units, and 9 ft/sec. for tail wheel units, unless stated otherwise in the Aeroplane Specification (for deck landing types see Chapter 308).

+ This case is intended to indicate the degree of reduction in strength usually acceptable for take-off, from a hard smooth runway, of an aeroplane heavily loaded with fuel for special reinforcing operations. If the case gives critical design loads in any part of the structure, the designer should ascertain whether any strengthening is required or whether the loaded weight should be reduced by omission of some of the extra fuel or equipment.

Energy absorption (cont'd)

5. Main undercarriage units.- When the aeroplane weight is W_1, the main undercarriage shock absorber units shall be capable of reducing the vertical velocity of descent, during an airborne landing, from the specified initial value to zero. During this process the maximum vertical ground reaction per undercarriage unit shall not exceed $\frac{5}{2} W_1$.

6. The conditions of para. 5 shall be met when landing in Attitude A or in Attitude B under any possible combination of the following conditions:-

With ground reaction at any angle up to 22° aft of the vertical and up to 17° from the vertical, port or starboard. (For Attitudes A and B see para.23)

7. Compliance with the requirements of paras.5 and 6 shall be demonstrated by means of drop tests but it will normally be acceptable to test in the most adverse attitude only, that is either tail up or tail down.

8. The tests shall be made with the tyre pressures appropriate to take-off and landing at W_2 and W_1 respectively. The pressure in the shock absorber shall be that judged to give the best compromise between landing at W_1 and taxying at W_2.

9. Tail wheel units.- When the static load on the tail wheel is R_1 the shock absorber unit shall be capable of reducing the vertical velocity of descent from the specified initial value to zero. +During this process the maximum vertical ground reaction shall not exceed 5 times the static load on the wheel.

10. The conditions of para.9 shall be met when landing with wheel central and ground reaction,-

(i) for tail wheel units having a tyre diameter not exceeding 24"-

(a) vertical,
(b) 26° backwards from the vertical,-

+ This corresponds approximately to an airborne three point landing.

AP 970 Design Requirements for Aeroplanes AL25-37 19460801 OCR.pdf

(ii) for tail wheel units having tyre diameter exceeding 24" -

(a) vertical,
(b) 22° backwards from the vertical.

11. Compliance with the requirements of paras.9 and 10 shall be demonstrated by means of drop tests.

12. The tests shall be made with the tyre pressures appropriate to take-off and landing at W_2 and W_1 respectively. The pressure in the shock absorber shall be that judged to give the best compromise between landing at W_1 and taxying at W_2.

13. It is recommended that whenever possible tail wheel shock absorber units should be so designed that the element is subjected to axial loads only, irrespective of the direction of the resultant external load on the wheel.

Energy dissipation

14. The design of main and tail wheel units shall be such that the energy absorbed is dissipated as far as possible during the first cycle of the shock absorber units. The rebound ratio shall be measured in drop tests which represent airborne conditions but in which the mass is supported only by the shock absorber. In such drop tests the rebound ratio shall not exceed 1/3 or 1/4 for the main undercarriage and tail wheel units respectively.

Recoil damping

15. The recoil of the moving parts shall be so damped that the stresses in all parts of the shock absorber are low when the moving parts are coming to rest on their stops.

16. This condition shall be met when the units are fully extended during a bounce following an airborne landing in which is developed the maximum vertical reaction defined in the strength requirements.

Main undercarriage loads

17. Strength.- The complete aeroplane and undercarriage structure shall comply with the stressing cases shown in Table I. The notation is given in para.37.

18. Stressing details.- If the value of λ_m, as determined from tests, is lessthan 2.5, the value of this function to be assumed for strength calculations will be subject to agreement with The Director, R.A.E. (S.M.E.Dept.)

19. All drag loads shall be applied at the wheel hub, except in Cases 5 and 6 where braking loads are assumed, and are applied at ground level.

20. The tyre deflections used shall be those obtained under the unfactored vertical load as given in the tables.

21. All side loads shall be applied at the ground vertically below the centre of the axle.

22. Where upper and lower limits are given for drag and/or side loads in cases of Table I, the structure shall have at least the specified factor for all possible combinations of load within the specified range.

23. The attitudes of the aeroplane specified in Table I as A, B or C are defined as follows, for tail wheel type undercarriages,

Attitude A - Main tyre deflections corresponding to ground reaction $\frac{\lambda m_2 W_4}{2}$; main shock absorbers half compressed and tail wheel just clear of the ground.

Attitude B - Main tyre deflections corresponding to ground reaction $\frac{\lambda m_2 W_4}{2}$; main shock absorbers half compressed, tail up (i.e. thrust line horizontal).

Attitude C - Static position corresponding to the case under consideration.

24. In Cases 1 to 4, for both Attitudes A and B the loads applied to the undercarriage will be balanced by inertia forces and moments. The only air forces which need to be considered occur in the airborne landing conditions when a lift on the wings equal to the weight of the aeroplane shall be assumed. In Case 6, Attitude C, the tail or nose wheel is on the ground and for balancing purposes a vertical load at the tail or nose wheel equal to (aeroplane weight minus W_3) together with appropriate inertia forces and moments should be assumed. This case is intended mainly as a design criterion for the main undercarriage units.

25. Usually it will only be necessary to consider the undercarriage geometry appropriate to the most extended condition of the shock absorber unit for the appropriate stressing case. In some designs, however, the change in geometry as the shock absorber closes may materially alter the loading of the structure. Thus the maximum applied loads do not necessarily produce maximum stresses in all the members. This should be considered when applying the cases and account taken of other conditions when necessary.

C

26. Where the main wheel unit is mounted on a fairly flexible structure the usual rigid body stressing assumption may give more severe loads on the structure than actually occur. If the effects of flexibility of the structure to which the undercarriage is attached, are appreciable, allowance should be made for them and reference should be made to The Director, R.A.E., (S.M.E.Dept.) for agreement on stressing assumptions.

Tail wheel unit loads

27. Strength.- The complete aeroplane structure shall comply with the stressing cases shown in Table II, although these will usually only be critical for the tail wheel unit, its attachments, and the rear fuselage structure. The notation is given in para.37.

28. Stressing details.- If the value of λ_t as determined from tests, is less than 2.5, the value of this function to be assumed for strength calculations will be subject to agreement with The Director, R.A.E.(S.M.E.Dept.)

29. All drag loads shall be applied at the hub.

30. All side loads shall be applied at the ground vertically beneath the centre of the axle.

31. The tyre deflections used shall be those obtained under the unfactored static vertical load as given in the tables.

32. The side loads, S_1 and S_2 respectively, shall not be less than the loads required to rotate the unit about the swivel axis, allowance being made for,-

(i) self centring devices,
(ii) anti-shimmy devices,
(iii) increase of bearing friction due to weathering, and
(iv) the possibility of incorrect adjustment.

33. As overriding minimum values for the side loads:-

(i) Where castoring motion of the unit is limited by a hydraulic damper not fitted with a torque limiting device:-

(a) S_1 shall be taken as $0.4\lambda_t R_1$

(b) S_2 shall be taken as $0.9 R_2$

(ii) For other types of unit:-

(a) S_1 shall be taken as $0.2\lambda_t R_1$

(b) S_2 shall be taken as $0.45 R_2$

34. When a lock is fitted to hold the wheel in the central position, this case should be considered, assuming the overriding minima of para.33(i).

Tests

35. Shock absorption tests.- Each new design of shock absorber unit shall be subjected to dynamic drop tests to determine the shock absorption characteristics, and to static compression tests to determine the friction existing under load. If, however, the design and loading are sufficiently similar to those of a unit already tested, the tests may be waived by the D.T.D.

36. Details of the tests will be specified by The Director, R.A.E., (S.M.E.Dept).

Notation

37. W_1 = Landing weight (para.2)

W_2 = Take-off weight (para.2)

W_3 = Maximum total reaction at main wheels when tail or nose wheel is on ground, with most adverse C.G. position and weight up to W_2.

W_4 = Overload take-off weight for reinforcing flights.

R_1 = Static load on tail wheel unit appropriate to W_1 (para.3)

R_2 = Static load on tail wheel unit appropriate to W_2 (para.3)

R_4 = Static load on tail wheel unit appropriate to W_4 (para.3)

S_1 = Tail wheel unit side load on landing (para.32)

S_2 = Tail wheel unit side load at take-off (para.32)

r = Main wheel rolling radius corresponding to appropriate tyre deflection

T = Maximum brake torque per main undercarriage unit

$$\lambda_m = 2\left\{\frac{\text{Maximum vertical reaction per main undercarriage unit developed in drop test.}}{W_1}\right\}$$

D

$$\lambda_t = \frac{\left(\text{Maximum vertical reaction on tail wheel unit developed in drop test}\right)}{R_1}$$

V_{S_F} = Stalling speed, flaps in landing position

K = A coefficient (see Table 1, Case 2) which varies as shown below.

Values of "K"

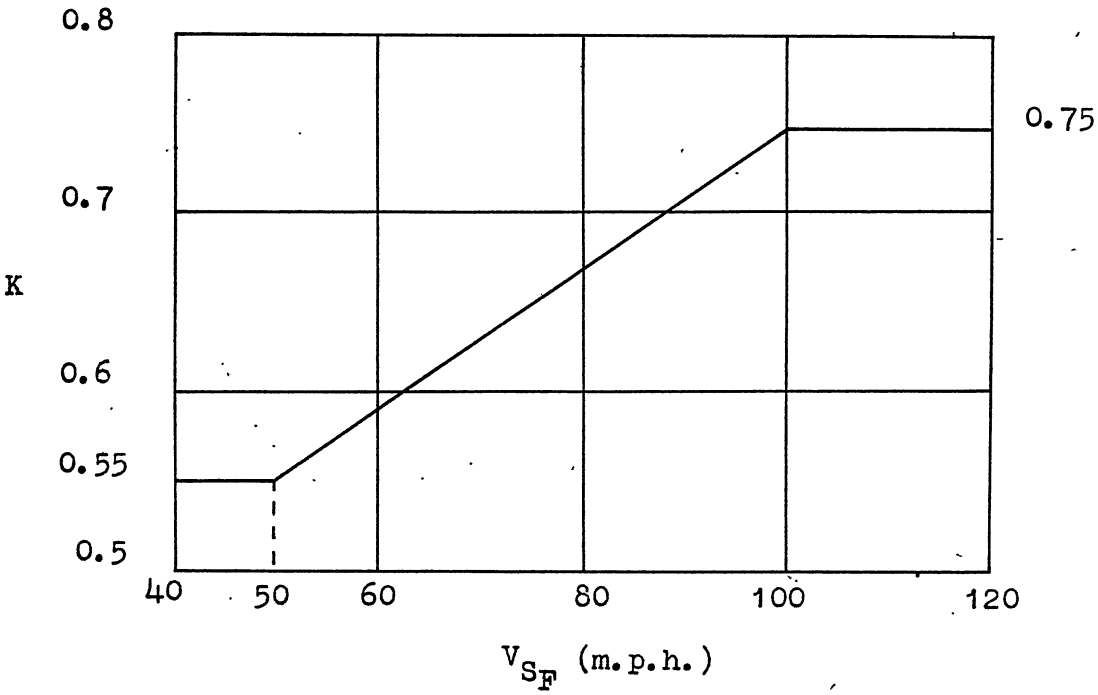

TABLE I

Strength under main wheel loads

Case No.	Condition	Attitude	Factor	Unfactored loads per wheel			Shock absorber closure
				Vertical	Drag	Side+	
1	Landing (airborne)	A and B	1.33	$\lambda_m W_1/2$	0 to $(\lambda_m W_1/2)\tan 22^\circ$	0 to $0.3\lambda_m W_1/2$	That at which maximum vertical reaction first developed.≠
2	Landing with high drag (airborne)	A and B	1.33	$k\lambda_m W_1/2$	$(k\lambda_m W_1/2)\tan 40^\circ$	0	Nil, unless system specially designed to operate under high drag, when more appropriate closure may be taken.
3	One wheel landing (airborne)	A and B	1.33	0 and $2/3\lambda_m W_1/2$	0	0	That at which maximum vertical reaction first developed.≠
4	Take-off (non-airborne)	A and B	2.0	$1.75\ W_2/2$	0 to $(1.75\ W_2/2)\tan 17^\circ$	0 to $0.4\ W_2/2$	Static load $W_2/2$
5	Braked condition (non-airborne) (tail-wheel undercarriage)	C	2.0	$1.75\ W_2/2$	$1.33T/r$	0	Static load $W_3/2$
	Braked condition (non-airborne) (nose-wheel undercarriage)	C	2.0	$1.75\ V/2$#	$1.35T/r$	0	Static load $V/2$
6	Rolling backwards (non-airborne)	C	1.5	$W_3/2$	$-0.7W_3/2$ø	0	Static load $W_3/2$
7	Re-inforcing take-off (non-airborne)	A and B	1.5	$1.75\ W_4/2$	0 to $(1.75\ W_4/2)\tan 17^\circ$	0 to $0.4\ W_4/2$	Static load $W_4/2$

+ To act inboard on one side of the aeroplane and outboard on the other.
ø $1.33T/r$ to be applied at the point of tyre contact and the remainder at the hub; if $1.33T/r$ exceeds $0.7W_3/2$ the latter load is to be applied at the point of tyre contact.
≠ Not more than half closure to be assumed.

$$\#_V = \frac{W_2\left(\ell_n - \frac{HD_B}{2\ W_2}\right)}{\ell_m + \ell_n}$$

where the terms are as defined in Chapter 305.

TABLE II

Strength under tail wheel loads

Case No.	Condition	Position of tail wheel	Factor	Unfactored load on tail wheel				Shock absorber closure
				Vertical	Drag		Side	
					Tail wheel > 24" dia.	Tail wheel ≯ 24" dia.		
A	Landing	Central	1.33	$\lambda_t R_1$	0 to $\lambda_t R_1 \tan 22^\circ$	0 to $\lambda_t R_1 \tan 26^\circ$	0	That at which maximum vertical reaction first developed.+
B	Landing with side load	Central	1.33	$0.8\lambda_t R_1$	0 to $0.8\lambda_t R_1 \tan 22^\circ$	0 to $0.8\lambda_t R_1 \tan 26^\circ$	0 to S_1 ø	That at which maximum vertical reaction first developed.+
C	Landing with high drag	Central	1.33	$0.6\lambda_t R_1$	0 to $0.6\lambda_t R_1 \tan 40^\circ$	0 to $0.6\lambda_t R_1 \tan 40^\circ$	0	Nil, unless system specially designed to operate under high drag, when more appropriate closure may be taken.
D	Take-off	Central	2.0	$1.75R_2$	0 to $1.75R_2 \tan 22^\circ$	0 to $1.75R_2 \tan 26^\circ$	0	Static load R_2
E	Manoeuvring	Any castored position	1.5	$1.75R_2$	0 to $1.75R_2 \tan 22^\circ$	0 to $1.75R_2 \tan 26^\circ$	0 to S_2 ø	Static load R_2
F	Reinforcing take-off	Central	1.5	$1.75R_4$	0 to $1.75R_4 \tan 22^\circ$	0 to $1.75R_4 \tan 26^\circ$	0	Static load R_4

+ Not more than half closure to be assumed.
ø See para. 32 et seq.

RELEVANT M.O.S. PUBLICATIONS

Airworthiness Technical Notes

No.134 - Maintenance of landing gear

R.A.E. Reports

No. S.M.E.3298 - Prediction of undercarriage reactions
No. S.M.E.3309 - Dynamic loads in aeroplanes under given impulsive loads

R.A.E. Technical Notes

No. S.M.E. 20 - The effective rolling radius of elastic tyred wheels
No. S.M.E. 85 - The energy absorption of articulated shock absorbers under conditions of drag loading
No. S.M.E.183 - A method of shock absorber performance prediction with a note on its application to tricycle aeroplanes

CHAPTER 305

ALIGHTING AND TAKE-OFF

NOSE WHEEL TYPE UNDERCARRIAGE

Note.- The subject matter of this chapter was amended following J.A.C.Paper No.235

A

Amended by A.L.No.32

CHAPTER 305

ALIGHTING AND TAKE-OFF

NOSE WHEEL TYPE UNDERCARRIAGE

Introduction

1. The following requirements apply to aeroplanes with tricycle landing gear comprising two non-castoring main undercarriage units and a single castoring nose wheel unit. Requirements for tricycle landing gears outside the above category are not stated but such designs shall be discussed with The Director, R.A.E. (S.M.E. Dept.)

General

2. An airborne "three point" landing has been chosen as the worst landing case which need be considered for the nose-wheel units, and the energy absorption requirements shall be met at the same vertical velocity as that for which the main undercarriage is designed. (i.e. 12 ft/sec. unless otherwise specified.)

3. The characteristics of the main undercarriage and nose wheel units shall be arranged so that the aeroplane does not change its attitude in pitch during an airborne "three point" landing in which the forces at the hubs of all wheels are inclined 22° backwards from the vertical.

4. For the main undercarriage units the worst condition is associated with a nose-up landing (i.e. when the nose wheel is off the ground) and these units can thus be considered in the same way as undercarriages for tail wheel types.

5. The requirements of Chapter 304 applicable to main undercarriage units shall apply to the main undercarriage units of tricycle landing gears, except where otherwise specified, and except that the aeroplane attitudes shall be interpreted as follows:-

Attitude A - Main tyre deflections corresponding to ground reactions $\frac{\lambda_m W_1}{2}$; main shock absorbers half compressed and tail fuselage just clear of the ground. If the incidence at this attitude exceeds the stalling incidence, (engine off and with flaps in the landing position) then the attitude corresponding to stalling incidence shall be used.

Attitude B - Main tyre deflections corresponding to ground reactions $\frac{\lambda_m W_1}{2}$; main shock absorbers half compressed and nose wheel just clear of the ground.

Attitude C - Static position corresponding to the case under consideration.

Attitude D - All wheels touching ground and all shock absorbers fully extended.

where λ_m and W_1 are as defined in Chapter 304.

These definitions apply to the attitude of the aeroplane only, and are applicable also throughout this chapter. The shock absorber closures and tyre deflections for the stressing cases are given in the appropriate tables of this chapter and of Chapter 304.

C.G. Positions

6. In those cases where the position of the C.G. influences design load, the most forward position of the C.G. appropriate to the specified weight shall be assumed for the nose wheel unit cases. Similarly the rearmost C.G. position appropriate to the specified weight shall be assumed for the main undercarriage unit cases.

Nose-wheel unit performance

7. When the requirements of para.3 are met, the energy which shall be absorbed by the nose wheel is,

$$\frac{W_1 V^2}{2g} \cdot \left(\frac{l_2 + 0.404h}{l_1 + l_2}\right)$$

where W_1 ... maximum design landing weight of aeroplane

V ... vertical velocity of descent

l_1 ... horizontal distance of C.G. from nose wheel

l_2 ... horizontal distance of C.G. from main wheels

h ... height of C.G. above main wheel hub

and all dimensions are taken with the aeroplane in Attitude D.

8. Drop tests shall be made at the specified vertical velocity on a nose wheel unit in Attitude D, to verify that

(i) the energy absorption requirements are met,

(ii) the requirements of para. 2.5. of Chapter 301 are met,

(iii) the maximum reaction R_1 defined in para.20 is not exceeded.

Main wheel unit performance

9. When the requirements of para.3 are met the energy

which shall be absorbed by a main undercarriage unit is,

$$\frac{W_1}{2}\frac{V^2}{2g}\left(\frac{l_1 - 0.404h}{l_1 + l_2}\right)$$

where the terms are as defined in para.7.

10. Drop tests shall be made on a main undercarriage unit in Attitude D at the specified vertical velocity, to verify that when this energy is absorbed the total travel - shock absorber plus tyre - is nearly equal to that of the nose wheel unit as found by the tests of para.8. These drop tests are additional to those required on the main undercarriage unit in accordance with Chapter 304.

11. The tests of paras. 8 and 10 shall be made under two conditions;-

(i) when the ground reaction is vertical, and
(ii) when the ground reaction is inclined 22° backward.

For articulated or other units on which the wheel moves horizontally during its vertical motion, corrections shall be applied during the drops with inclined reactions in accordance with R.A.E. Technical Note No. S.M.E. 85.

12. When the operation of the nose wheel unit or main undercarriage unit is sensitive to the variation of drag load, a tricycle prediction calculation should be made for an airborne "three point" landing in which the forces at the hubs of all wheels are inclined 22° backward from the vertical. The calculation should be made by an acceptable method, such as that described in R.A.E. Technical Note No. S.M.E. 183. When this course is followed the basic conditions for the drop tests of paras. 8 and 10 and the reaction of para.20 shall be taken from the tricycle prediction.

Energy dissipation

13. The design of the nose wheel unit shall be such that the energy absorbed is dissipated, as far as possible, during the first cycle of the shock absorber unit. The rebound ratio shall be measured in drop tests which represent airborne conditions but in which the mass is supported only by the shock absorber. In such drop tests the rebound ratio shall not exceed 1/3.

Recoil damping

14. The recoil of the moving parts shall be so damped that the stresses in all parts of the shock absorber are low when the moving parts are coming to rest on their stops.

15. This condition shall be met when the units are fully extended during a bounce following a landing in which is developed the maximum vertical reaction defined in the strength requirements.

Strength

16. General.- Where upper and lower limits are given for drag and/or side loads the structure shall have at least the specified factor for all possible combinations of load within the specified range.

17. Side loads shall be assumed to act at the ground vertically beneath the centre of the axle and parallel to it. Drag loads shall be applied in the plane of the wheel at the hub except where braking loads are assumed and are applied at the ground.

18. Usually it will only be necessary to consider the undercarriage geometry appropriate to the most extended position of the shock absorber unit for the appropriate stressing case. In some designs, however, the change in geometry as the shock absorber closes may materially alter the loading of the structure. Thus the maximum applied loads do not necessarily produce maximum stresses in all the members. This should be considered when applying the stressing cases and account taken of other conditions when necessary.

19. Landing and take-off.- The nose wheel unit, its attachments and the front portion of the fuselage shall comply with the strength cases shown in Table I.

20. When the requirements of paras. 3, 8 and 10 are met, the maximum nose wheel reaction (R_1) shall be taken as,

$$R_1 = \lambda_m W_1 \times \frac{\ell_2 + 0.404h}{\sqrt{(\ell_1 + \ell_2)(\ell_1 - 0.404h)}}$$

where the terms are as defined in para.7 and λ_m is as defined in Chapter 304.

21. For the braked conditions of Case 4 the unfactored load on the nose wheel (R_2) shall be taken as,

$$R_2 = W_2 \frac{(\ell_m + 3H\frac{D_B}{W_2})}{\ell_n + \ell_m}$$

where W_2 ... maximum take-off weight of aeroplane

ℓ_n ... horizontal distance of C.G. from nose wheel

ℓ_m ... horizontal distance of C.G. from main wheel

H ... height of C.G. above ground

D_B ... $\frac{1}{3}$ (horizontal force at the ground corresponding to the maximum braking effort on the aeroplane).

C

22. The static Attitude C shall be used but it shall correspond to the static application of D_B.

23. Manoeuvring and rolling backwards.- For the manoeuvring condition of Case 5 the unfactored load on the nose wheel (R_3) shall be taken as,

$$R_3 = 1.75\ W_2 \cdot \frac{\ell_m + \frac{HD_B}{2W_2}}{\ell_n + \ell_m}$$

where the terms are as defined in para.21.

viz. the static load on the nose wheel unit corresponding to the application of $1\frac{1}{3}$ times the maximum braking effort on one main undercarriage unit. Attitude C shall be used but it shall correspond to the static application of D_B.

24. For the rolling backwards condition of Case 6 the unfactored load on the nose wheel unit (R_4) shall be taken as

$$R_4 = W_2 \frac{\ell_m}{\ell_n + \ell_m}$$

where the terms are as defined in para.21.

The Attitude C shall correspond to the normal static attitude of the aeroplane with the brakes off. This case is, however, intended to cover the case of an aeroplane moving backwards over a bumpy aerodrome surface.

Stressing details

25. The side load S in Cases 2 and 5 of Table I shall be not less than the load required to rotate the unit about the castoring axis, an allowance being made for;-

(i) self-centring devices,
(ii) the limiting torque due to the anti-shimmy device,
(iii) increases in bearing friction due to weathering, and
(iv) the possibility of incorrect adjustment.

As an overriding minimum the value of S shall be not less than one quarter of the unfactored vertical load on the nose wheel.

26. Reference should be made to The Director, R.A.E., (S.M.E.Dept.) where castoring motion of the nose wheel unit is controlled by a hydraulic damper not fitted with a torque limiting device.

27. The tyre deflections used shall be those obtained under the unfactored static vertical load as given in the tables.

Strength under nose-wheel loads

Case No.	Condition	Position of nosewheel	Attitude	Factor	Unfactored load on nosewheel			Shock absorber closure
					Vertical	Drag	Side	
1	Three point landing (airborne)	Central	D	1.33	R_1	0 to R_1 tan 22°	0	That at which maximum vertical reaction first developed.+
2	Three point landing with side load (airborne)	Central	D	1.33	$0.8R_1$	0 to $0.8R_1$ tan 22°	0 to S∅	That at which maximum vertical reaction first developed.+
3	Three point landing (airborne - high drag)	Central	D	1.33	KR_1≠	0 to KR_1 tan 40°	0	Nil, unless system specially designed to operate under high drag, when more appropriate closure may be taken.
4	Braked taxying (non-airborne)	Central	C	2.0	R_2	0 to R_2 tan 22°#	0	That at which R_2 is first developed - not more than that due to the static application of D_B (see para.21)
5	Manoeuvring on ground (non airborne)	All castored positions	C	1.5	R_3	0 to R_3 tan 35°#	0 to S∅	That at which R_3 is first developed
6	Rolling backwards (non-airborne)	Central	C	1.5	R_4	(anti-drag) $-R_4$ tan 35°	0	Static load R_4

+ Not more than half closure shall be assumed
∅ See para 25.
≠ For values of K, see Chapter 304.

If a nose wheel brake is fitted 1.33 T/r is applied at the point of tyre contact and remainder at the hub.
(T ... maximum nose wheel braking torque,
r ... rolling radius of nose wheel corresponding to the appropriate tyre deflection.)

D

RELEVANT M.A.P. PUBLICATIONS

Airworthiness Technical Notes

No. 134 - Maintenance of landing gear

R.A.E. Reports

No. S.M.E. 3298 - Prediction of undercarriage reactions

R.A.E. Technical Notes

No. S.M.E. 20 - The effective rolling radius of elastic tyred wheels
No. S.M.E. 85 - The energy absorption of articulated shock absorbers under conditions of drag loading
No. S.M.E.144 - Tricycle aeroplanes. The taxying performance of nose wheels
No. S.M.E.183 - A method of shock absorber performance prediction with a note on its application to tricycle aeroplanes
No. S.M.E.262 - Tricycle landing gear - The loads and performance of nose wheels

CHAPTER 306

ALIGHTING AND TAKE-OFF - SEAPLANES

Note.- The subject matter of this chapter was previously contained in Chapter 3.

CONTENTS

	Para.
Introduction	1
Landing tail up	3
Two-wave landing -	8
Boat seaplanes	9
Float seaplanes	11
Drift landing	13
Side load on wing tip floats	14

Fig 1 - Landing tail up: Boat seaplanes
Fig 2 - Landing tail up: Float seaplanes
Fig 3 - Two-wave landing: Boat seaplanes
Fig 4 - Two-wave landing: Float seaplanes
Fig 5 - Method of construction wave profile (trochoidal)

CHAPTER 306

ALIGHTING AND TAKE-OFF - SEAPLANES

Introduction

1. The requirements of this Chapter are in general, applicable to seaplanes with a planing bottom keel angle of from 115° to 140° at the point of application of the water reaction. Evidence at present available is not sufficient to establish a satisfactory variation of specified factor with the planing bottom keel angle. Individual consideration will be given to hulls and floats of which the planing bottom and keel angles differ considerably from the figures given above.

2. Insufficient evidence is available to formulate generally applicable requirements on planing bottom and frame strength. Requirements of limited applicability depending on aeroplane size and detail construction are given in A.D.M.337. For other seaplanes not coming in these categories, reference should be made to S.M.E. Department, R.A.E.

Landing tail up

3. The seaplane is assumed to be gliding into the water, the flight path being such that the wings are at stalling incidence with the chord horizontal. The hull or float(s) and the remainder of the structure are to have an ultimate factor of at least 1.0 under the following conditions of loading:-

(i) Water reaction $R = N_1W$ acting as shown in Figs.1 and 2 where N_1 is to be taken as 3.5 unless otherwise specified.

(ii) Lift 1.0W at the wings and tail.

(iii) 1.0W acting vertically downwards through the C.G. (i.e. normal to the chord of the wing).

(iv) Inertia forces which balance the reaction R and couple G (= Ra) turning the seaplane about its C.G.

4. The stresses in the structure are to be calculated corresponding to the instant of application of the force R. The seaplane will have linear and angular accelerations but no angular velocity and hence no centrifugal forces will be called into play.

FS/53

5. The above system of loads will give rise to the following forces on any component mass weight, w -

(i) A force, due to the linear acceleration of magnitude $N_1 w$ acting through the C.G. of the mass, opposite and parallel to the direction of R.

(ii) A force, due to the angular acceleration, of magnitude

$$\frac{w\, r\, \ddot{\theta}}{g}$$

where r is the distance in ft. in side elevation between the C.G. of the mass and the C.G. of the seaplane.

$\ddot{\theta}$ is the angular acceleration = $\frac{G\, g}{B}$

B is the pitching moment of inertia in lb.ft.^{2} of the whole seaplane.

(iii) Gravity force, w.

6. This case is intended to check the strength in bending and shear of the forward portion of the hull or float particularly in the neighbourhood of the forward point of attachment of hull or float to the wing structure. Hence, the water reaction has been converted into a uniform pressure distribution as shown in figs. 1 and 2. The value of the pressure distribution, p, is given by the formulae -

$$p \cdot \ell = N_1 W \quad \text{for boat seaplanes}$$

$$p \cdot \frac{2}{3} \ell = N_1 W \quad \text{for float seaplanes}$$

where ℓ is the distance from the main step to the point where the chine line meets the bow.

7. For the strength of the float undercarriage it will usually be sufficiently accurate to consider only the forces of para.5 (i) and (iii). For the float structure the full water reaction ($R = N_1 W$) must be used, but for the supporting structure of the undercarriage it may be assumed that $R = N_1 (W - f)$ where f is the weight of the floats.

Two-wave landing

8. The hull or float(s) and the remainder of the structure are to have an ultimate factor of at least 1.0 under the loading shown in figs. 3 and 4 where, unless otherwise specified -

Two-wave landing (cont'd)

N_2 = 3.5 for boat seaplanes

N_2 = 5.0 for float seaplanes

9. Boat seaplanes.- The reaction R_1 acts at the rearmost step or, where only one step is fitted, at the point where the full load waterline, at rest, cuts the rear portion of the hull in profile. The point of application of R_2 is determined by drawing in a standard wave (see para.10) with one crest at the point of application of R_1, and rotating the hull about this latter point until the fore part of the hull touches the surface of the water. It is immaterial how the reactions R_1 and R_2 are distributed over the bottom surface of the hull.

10. The standard wave is trochoidal in form (for method of constructing trochoidal wave see fig.5) with a length from crest to crest equal to the length of the hull on the still water line, at maximum load, and with a depth from crest to trough of 1/15th of the length.

11. Float seaplanes.- The attitude of the seaplane is that which it would take up when floating fully loaded at rest in still water. The water reactions R_1 and R_2 are to be taken at L/6 from the bow and stern respectively where L is the overall length of the float.

12. For the float structure the full water reaction ($R = N_2W$) is to be used, but for the undercarriage structure the weight of the floats may be deducted and the reaction taken as $N_2 (W - f)$.

Drift landing

13. This case is applicable to float seaplanes only. A factor of at least 1.0 is required under a side load only of $\frac{W - f}{n}$ acting at the centre of area in side elevation on each of the n main floats. The loads are assumed to act simultaneously and in the same direction. This requirement does not apply to the structure of the main float or floats.

Side load on wing tip floats

14. The attachment of the wing tip floats and the adjacent structure of the seaplane is to be capable of withstanding without failure a side load on the float of at least 150 lb./sq.ft.

C

of projected area of side elevation. The load acts at the centre of area of the side elevation in a direction parallel to the wing and both towards and away from the centre line of the seaplane.

15. If a spring is incorporated in the mounting of the float so that the float can move relatively to the wing under a side load, the value of the side load may be reduced to 100 lb/sq.ft.

16. The above requirement does not apply to the structure of the wing tip float.

Water handling

17. Flying boats shall be capable of taxying satisfactorily in any direction in winds of speeds up to 0.4 of the stalling speed with flaps down, with a minimum of 20 knots and a maximum of 35 knots. For float seaplanes the corresponding wind speeds are 0.3 of the stalling speed, 15 knots and 30 knots.

18. The alighting gear design shall be such that the take-off and landing requirements of Chapter 601 can be met.

FIG. 1.

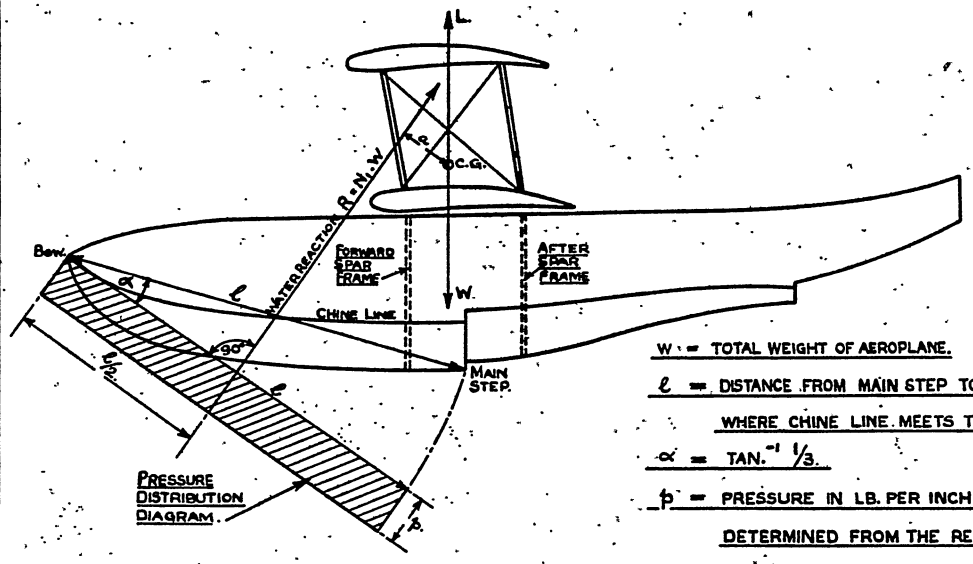

W = TOTAL WEIGHT OF AEROPLANE.

ℓ = DISTANCE FROM MAIN STEP TO POINT WHERE CHINE LINE MEETS THE BOW.

α = TAN.$^{-1}$ 1/3.

p = PRESSURE IN LB. PER INCH OF FOOT RUN DETERMINED FROM THE RELATION

$p\ell = N_1W.$

LANDING TAIL-UP—BOAT SEAPLANE

FIG. 2.

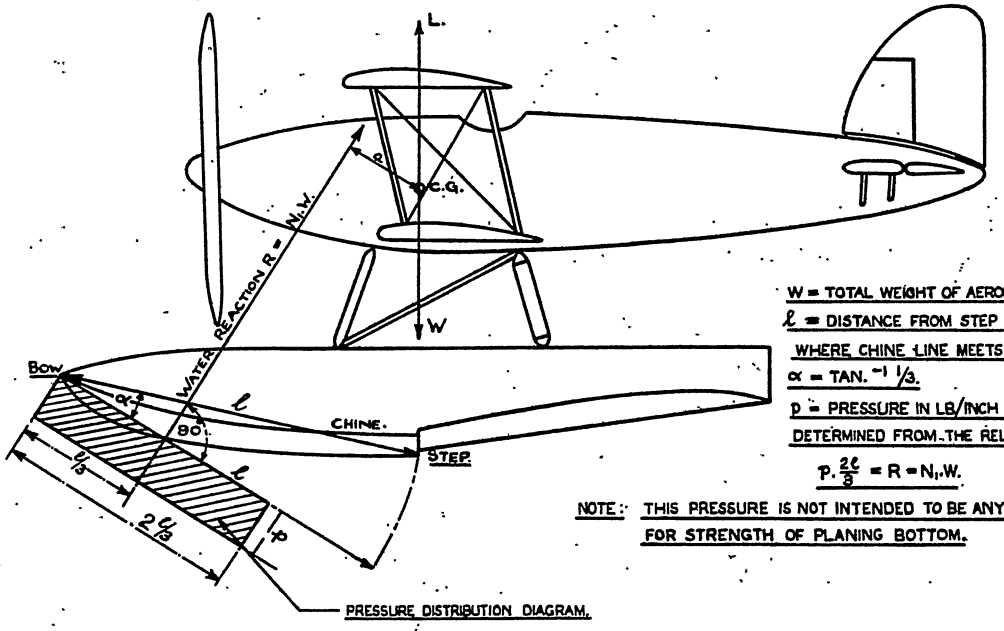

W = TOTAL WEIGHT OF AEROPLANE.

ℓ = DISTANCE FROM STEP TO POINT WHERE CHINE LINE MEETS THE BOW.

α = TAN.$^{-1}$ 1/3.

p = PRESSURE IN LB/INCH RUN DETERMINED FROM THE RELATION

$p.\frac{2\ell}{3} = R = N_1W.$

NOTE: THIS PRESSURE IS NOT INTENDED TO BE ANY CRITERION FOR STRENGTH OF PLANING BOTTOM.

LANDING TAIL-UP—FLOAT SEAPLANE

FS/55

FIG. 3.

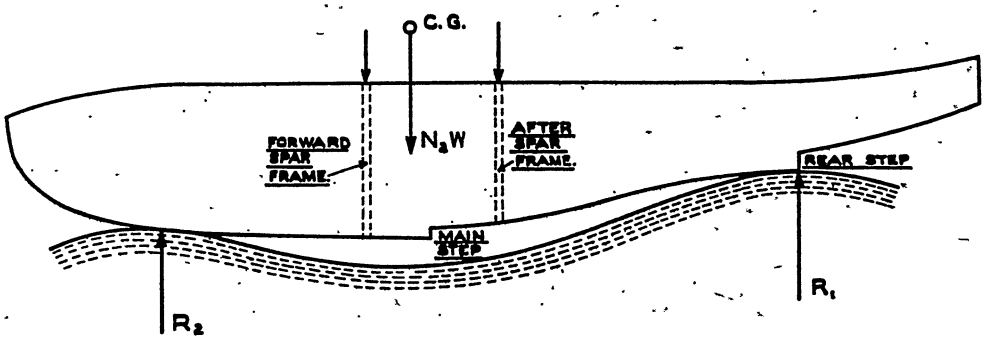

$R_1 + R_2 = N_2 W$

TWO-WAVE LANDING — BOAT SEAPLANE

FIG. 4.

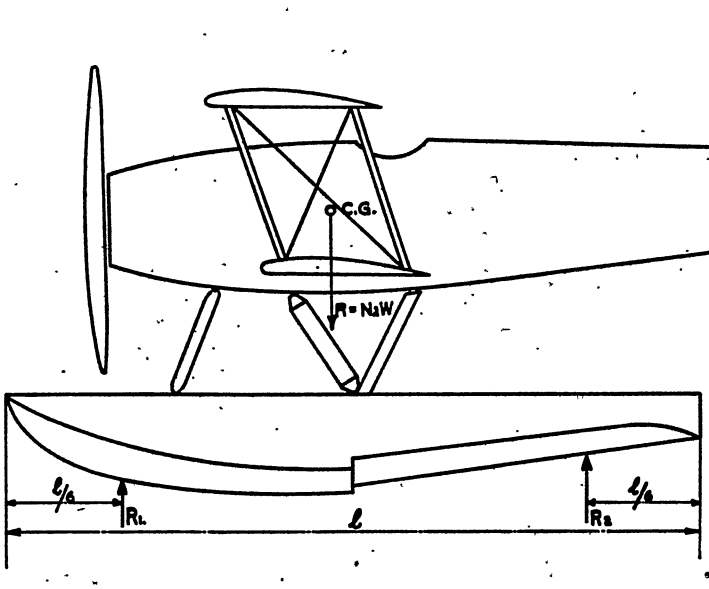

W = TOTAL WEIGHT OF AEROPLANE.

ℓ = OVERALL LENGTH OF FLOAT.

$R_1 + R_2 = N_2.W.$

TWO-WAVE LANDING — FLOAT SEAPLANE

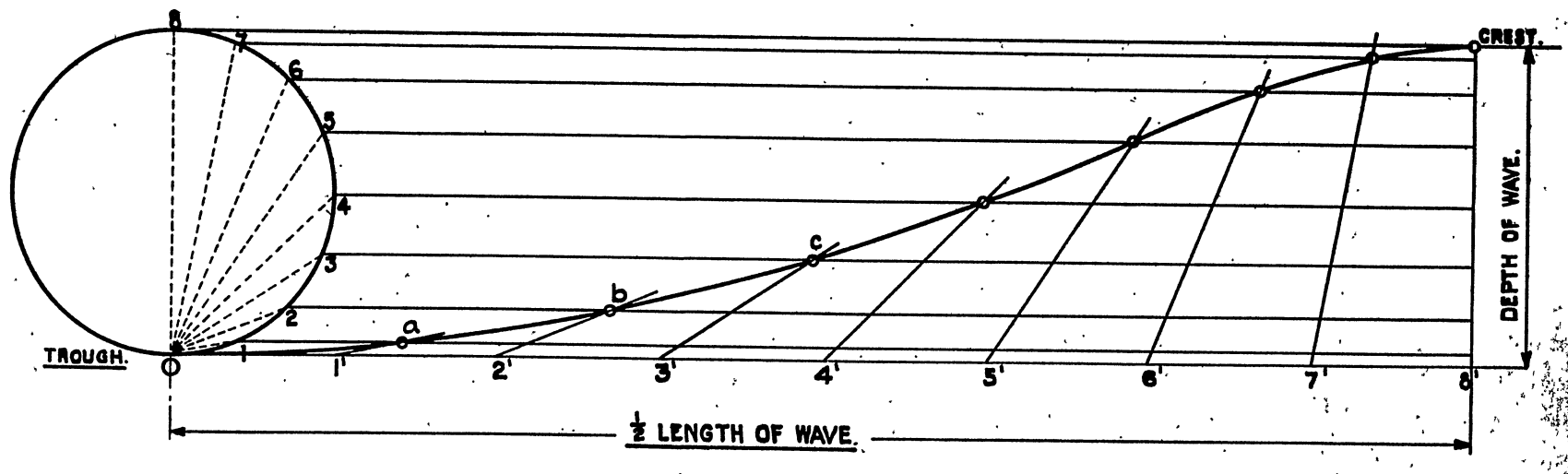

FIG. 5.

METHOD:- DIVIDE HALF CIRCLE INTO ANY NUMBER OF EQUAL PARTS AT POINTS 0, 1, 2, 3.------
JOIN 01, 02, 03----------
DIVIDE HALF LENGTH INTO SAME NUMBER OF EQUAL PARTS AT POINTS 0, 1', 2', 3'------
THRO' POINTS 1', 2', 3'-----DRAW LINES 1'a, 2'b, 3'c-----PARALLEL TO 01, 02, 03---TO CUT
HORIZONTALS THRO' 1, 2, 3------IN POINTS a, b, c--------
THEN a, b, c------ARE POINTS ON THE WAVE PROFILE.

METHOD OF CONSTRUCTING WAVE PROFILE. (TROCHOIDAL)

AP 970 Design Requirements for Aeroplanes AL25-37-19460801 OCR.pdf

RELEVANT M.A.P. PUBLICATIONS

Aircraft Design Memoranda

No.337 - Strength of bottome of hulls and floats.

CHAPTER 307

CATAPULTING, ACCELERATING, AND ROCKET ASSISTED TAKE-OFF

FS/24

Amended by A.L.No.25

CHAPTER 307

CATAPULTING, ACCELERATING, AND ROCKET ASSISTED TAKE-OFF

Introduction

+ 1. The appropriate requirements of this chapter shall be complied with when either catapulting or the use of rocket assisted take-off gear is specified for the particular aeroplane type. The requirements for accelerating apply in full only when the now obsolescent 4-point method is specified but the general conditions of wind speed and acceleration are appropriate also to the tail-down method for which full requirements are in course of preparation.

Spools

2. Two pairs of spools are required in accordance with S.I.S.Nos.362 and 363, as appropriate for the forms of take-off specified. The front and rear spools shall be positioned so that the attitude of the aeroplane will result in a gross lift of approximately one-third of the maximum all-up weight when the incident air speed is 56 knots and the flaps are in the position for best climb at sea level.

Catapulting

3. Spools shall be suitable for use with the specified types of catapult trolley. Full details of catapult trolleys are obtainable from the D.T.D.(R.D.N.2).

4. The ultimate factor throughout the structure shall not be less than 2.0 at any time during a launch under any combination of the following conditions,-

(i) the engine running at full throttle,

(ii) an acceleration imparted to the aeroplane, excluding that due to propeller thrust, varying from $3\frac{1}{4}g$ at or near the beginning of the launch to $2\frac{3}{4}g$ at the end of the launch,

(iii) gravity loads corresponding to a normal acceleration of 1.0g,

(iv) airspeed conditions, defined below at commencement and end of launch in terms of the notation of Fig.1,-

(a) commencement of launch,- any total air velocity represented in magnitude and direction by a vector which, drawn radially towards point A, falls within the limits of area ABCDA (in general it should be necessary to investigate the strength of the structure only for velocities represented by vectors CA and DA),

+ From J.A.C.Paper No.211.

(b) end of launch,- any total air velocity represented in magnitude and direction by a vector which, drawn radially towards point O, falls within the limits of area O A B C D O (in general it should be necessary to investigate the strength of the structure only for velocities represented by vectors CO and DO).

5. To ensure adequate strength of the structure when the aeroplane is standing at rest on the catapult, this case shall be investigated assuming a total wind of 60 knots across the catapult occurring when the engine is running at full throttle and combined with gravity loads corresponding to a normal acceleration of 1.0g. A factor of at least 2 is required throughout the structure.

Accelerating

6. Spools shall be suitable for use with the accelerator trolley as shown in S.I.S.370.

7. The ultimate factor throughout the structure shall not be less than 2.0 under a combination of the following conditions,-

(i) the engine running at full throttle,

(ii) an acceleration imparted to the aeroplane, excluding that due to propeller thrust, varying from $3\frac{1}{4}g$ at or near the beginning of the launch to $2\frac{3}{4}g$ at the end of the launch,

(iii) gravity loads corresponding to a normal acceleration of 1.0g,

(iv) airspeed conditions, defined below at commencement and end of launch in terms of the notation of Fig.2,

(a) commencement of launch,- any total air velocity represented in magnitude and direction by a vector which, drawn radially towards point A, falls within the limits of area A B C D A (in general, it should be necessary to investigate the strength of the structure only for the velocities represented by vectors CA and DA),

(b) end of launch,- any total air velocity represented in magnitude and direction by a vector which, drawn radially towards point O, falls within the limits of area O A B C D O (in general, it should be necessary to investigate the strength of the structure only for the velocity represented by vector CO).

+ From J.A.C. Paper No. 176

AP 970 Design Requirements for Aeroplanes AL25-37 19460801 OCR.pdf

8. The strength of the main structure when the aeroplane is at rest on the accelerator trolley is amply covered by the launching cases of para.7 and investigation into this case is not required.

9. The strength of the structure must be adequate to withstand the loads applied at the rear spools during loading-on, when the main wheels are against chocks and the tail is being raised by manipulation of the rear supports. Loading-on should be considered both in zero relative wind and in a head-on wind relative to the ship of 60 knots, taking a download at the centre of gravity of the aeroplane equal to the maximum all-up weight for accelerated take-off and assuming propeller thrust and drag to be zero. An ultimate factor of at least 2 is required throughout the structure for these cases.

+ R.A.T.O.G

10. Strength.- The strength of the aeroplane structure is covered by the catapulting or accelerating case ø and it is therefore only necessary to consider the strength of the local structure for rocket assisted take-off.

11. The local aeroplane structure shall have a factor of safety of 2.0 under the following combined loads,-

(i) 1.0 times the rocket thrust defined in para.24, and

(ii) loads due to normal acceleration of 1g, together with engine thrust appropriate to take-off, the aeroplane being completely airborne. For stressing purposes the speed may be taken as stalling speed with flaps up.

12. The local aeroplane structure shall have a factor of safety of 2.0 under the following combined loads occurring during take-off.

(i) 1.0 times the rocket thrust defined in para.24, and

(ii) loads due to the appropriate take-off requirements of Chapter 304.

13. The rocket carrier and its supporting structure (or the rocket supporting structure where no carrier is used) shall be designed to the cases of paras.11 and 12, but with a factor of safety of only 1.75. The ultimate factor of the carrier shall not exceed 2.0 so that the strength of the

---

+ From J.A.C.Paper No.211.

ø If neither catapulting nor accelerating is specified, the general effects of rocket assisted take-off on the aeroplane structure must be considered.

aeroplane structure shall always be greater than the strength of the carrier under the loads arising from the rocket thrust.

14. The rocket carrier and its supporting structure (or the rocket supporting structure where no carrier is used) shall be capable of withstanding the ultimate loads arising from a sideways acceleration of 1g in either direction to ensure adequate lateral rigidity.

15. The rocket carrier, its supporting structure, and the local aeroplane structure shall be capable of withstanding the ultimate loads arising from landing with spent rockets in position. The appropriate landing requirements of Chapter 304 shall be applied.

Anchorages

16. The effect of horizontal acceleration should be considered on the attachments of such items as seats, bombs, and fuel tanks. Adequate anchorage and support should be provided for the above items and for all items of equipment such as instruments, W.T. gear, camera gear, and bomb gear.

Stressing assumptions

17. Centre of gravity.- In applying the above requirements the c.g. shall be taken in the most adverse position, and with any practical condition of loading. It is particularly necessary to allow for the permissible tolerance on vertical c.g. position (see Specification No.D.T.D.1028).

18. Incident winds.- When considering the cases of paras.4, 5 and 7, it should be assumed that incident winds may have the same range of magnitude and direction from either port or starboard.

19. Catapult trolley.- It may be assumed that the catapult trolley can take reactions in any direction at the front support, but only vertically at the rear supports.

20. Accelerator.- When investigating the accelerator stressing cases, the front hooks should be assumed to be free to float upwards a distance of 2.5".

21. The front hooks can react loads in horizontal, vertical and outboard directions. The rear supports can react loads in a vertical direction only. Since the aeroplane will be supported partly by the main undercarriage, the vertical reactions at the spools will depend to some extent on the undercarriage characteristics and these together with the vertical component of the tow-ropes shall be taken into account.

22. Direct side wind loads will be reacted partly by the friction between the main undercarriage wheels and deck, and partly by the lee-side front hook. A friction coefficient between the wheels and deck of 0.25 may be assumed.

AP 970 Design Requirements for Aeroplanes AL25-37 19460801 OCR.pdf Page 253

Stressing assumptions (cont'd)

23. The front and rear supports may be inclined to the vertical in end view and loads in these supports will impose a side component on the spools. This component shall be taken into account when investigating the strength of the spools and their attachments.

+ 24. Rocket thrust.- The rocket thrust to be used in stressing is defined as the maximum thrust which will be experienced from one rocket fired at the maximum temperature at which operation is allowed, multiplied by the maximum number of rockets specified for use on the aeroplane. The value of this thrust will be provided by the R.A.E.

+ From J.A.C. Paper No.211

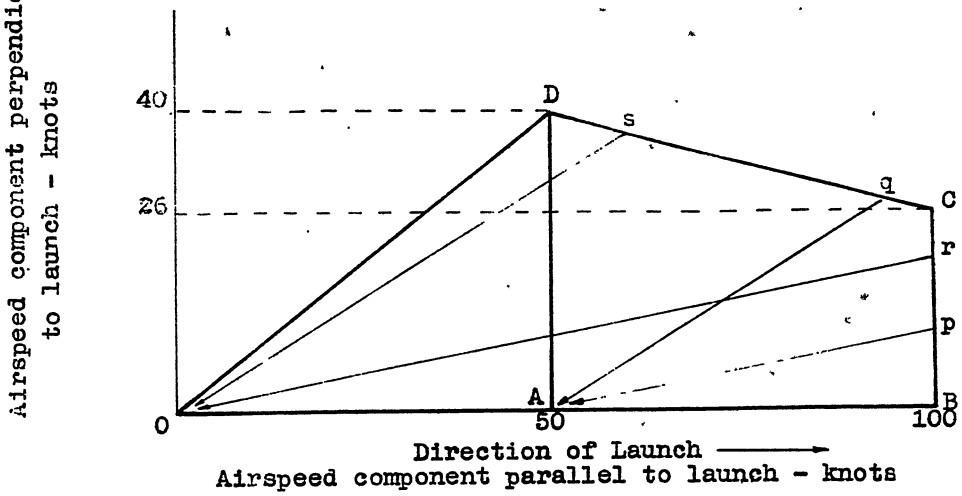

INCIDENT AIRSPEED CONDITIONS FOR CATAPULTING

Fig.1.

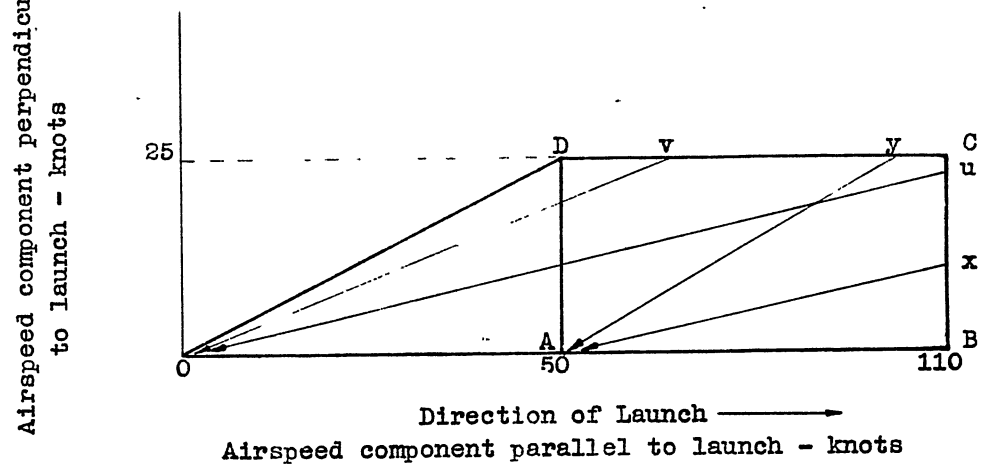

INCIDENT AIRSPEED CONDITIONS FOR ACCELERATING

Fig.2.

FS/23a

RELEVANT M.O.S. PUBLICATIONS

Airworthiness Technical Notes

No. 147 - Tail down launching for Naval aircraft

R.A.E. Technical Notes

No. Aero 1281 - Estimation of static and take-off thrust of propellers

No. Aero 1360 - Application of rockets for take-off assistance of Fleet Air Arm aircraft (secret)

No. Naval Aircraft 75 - An investigation into the initial accelerations experienced by aircraft during launching by accelerators

No. S.M.E.183 - A method of shock absorber prediction, with a note on its application to tricycle aeroplanes

No. S.M.E.280 - An approximate method of calculating the landing gear reactions which occur during two-point assisted take-off

CHAPTER 308

DECK LANDING

Note.- The subject matter of this chapter has been amended following J.A.C.Paper No.255.

A

Amended by A.L.No.32
(Re-issued with A.L.No.33)

CHAPTER 308

DECK LANDING

Introduction

+ 1. The requirements of this chapter apply to all aeroplanes intended to be used for deck landing operations, and they shall be read in conjunction with Chapter 304, the requirements of which shall be satisfied for such aeroplanes, except where overridden by this chapter.

Undercarriage (tail wheel type)

2. Attitude.- The undercarriage shall function satisfactorily with the aeroplane in all attitudes from that of "tail down" to "tail up". The design shall be such that friction and bending effects on the landing gear shock absorbers are small under all conditions. Special efforts shall be made to obtain good performance of the undercarriage when landing at an attitude midway between "tail down" and "tail up".

3. Energy absorption.- The main undercarriage units shall be designed to cater for airborne landings in which a vertical velocity of descent of 14 ft. per second is achieved. The "tail up" and "tail down" conditions shall be covered, each with all combinations of drag and side load within the ranges specified for stressing in Chapter 304, Table I, Case I.

4. The main undercarriage units shall be designed to cater for non-airborne landings in which a vertical velocity of descent of 11 ft. per second is achieved. The "tail up" condition shall be covered, with all combinations of drag and side load within the ranges specified for stressing in Chapter 304, Table I, Case I.

5. The tail wheel unit shall be designed to cater for airborne landings in which a vertical velocity of 11 ft. per second is achieved, with all drag loads within the range specified for stressing in Chapter 304. The ratios of the drag loads and the side loads to the vertical loads assumed shall be those given in Chapter 304, Table II, Case A.

6. Rebound ratio.- The rebound ratio (see Chapter 304) shall not exceed 0.25 for the main undercarriage units.

7. Wheel track.- The wheel track should be as wide as other design considerations will permit in order to reduce as much as possible the rolling due to long travel shock absorbers.

+ From J.A.C.Paper No.255.

Arrester gear installation

Paras. 8 and 9 have been deleted.

The requirements for installation of the arrester gear have been transferred to Chapter 727.

Arrester gear strength

10. Factor.- The whole aeroplane structure shall have an ultimate factor of not less than 1.5 under the conditions specified below.

11. Retardation.- The maximum value of the retardation produced by engagement of the arrester wire shall be taken as 2.67g unless otherwise specified for the particular type.

12. Weight.- The required factor shall be achieved at the appropriate design landing weight as agreed between the Contractor and M.A.P. (D.T.D).

13. Sideways and vertical loads.- Together with the force required to produce the specified retardation, sideways and vertical forces shall be considered to act as follows,-

(i) Sideways - any value from zero to $\frac{1}{8}$ of the backward force, acting normal to and on either side of the plane of symmetry,

(ii) Vertical - any value from zero to $\frac{1}{12}$ of the backward force, acting downwards.

14. Aeroplane attitude.- The range of attitudes in pitch reasonably likely to occur with a retarding force of the specified magnitude and direction shall be considered and catered for. This range should be at least from the "standing at rest" attitude to the "fuselage datum horizontal" attitude. A reasonable range of attitude in yaw, and distances off centre, are implicit in the angles at (i) of para. 13 and further allowance for yaw need not be made.

15. Position of hook arm.- When the above loads are applied the hook arm may be assumed engaged in the snap gear if such gear is provided. Otherwise the hook arm should be assumed in whatever position it would take up under the applied loads.

Stiffness of hook arm

16. If a snap gear is provided the total relative deflection of the hook arm and snap gear under three eighths of the unfactored loads of paragraphs 11 and 13(i), shall not be so high as to prevent the proper entry and engagement of the hook in the snap gear. This should be checked by test if practicable.

B

RELEVANT M.O.S. PUBLICATIONS

R.A.E. Technical Notes

No. Naval Aircraft 64 - A survey of requirements for arrested deck landings of naval aircraft

CHAPTER 309

CRASH LANDING

Note.- The subject matter of this chapter was amended following J.A.C.Paper No.252.

A

Amended by A.L.No.32

CHAPTER 309

CRASH LANDING

General

1. The fuselage or hull structure in the vicinity of the crew shall be designed to afford the crew as much protection as possible in the event of heavy or crash landing, or ditching. This structure shall be appreciably stronger than the adjacent parts, so that the latter will absorb some shock by deformation before the former yields.

+ 2. To cater for crash landing and ditching, all items covered by paras. 3 and 4 shall have an ultimate factor of at least 1.0 under forward inertia loads corresponding to the specified acceleration and under lateral inertia loads corresponding to an acceleration of 4g, acting both together and separately.

3. Items for which the acceleration specified shall be taken as 25g, (crew at crash stations).-

(i) Pilots' seats and harnesses and the seats and harnesses at all forward facing stations which have "Q" type harness, together with all attachments the failure of which might result in the user not being safely restrained against this specified acceleration.

(ii) The anchorages of, and structure adjacent to, all items which, if they came adrift during a crash landing or ditching, might cause injury to the crew at their crash stations or prevent the use of emergency exits or emergency equipment, together with those items which would be required for use by the crew during or after a crash landing.

(iii) Those parts of the structure, the failure of which would prevent the use of emergency exits.

(iv) The structure forming the main support at a crash station.

4. Items for which the acceleration specified shall be taken as 10g (crew at normal stations).-

(i) All crew seats and harnesses other than those included in para.3 above, together with all attachments the failure of which might result in the user not being safely restrained against this specified acceleration.

(ii) The anchorages of, and structure adjacent to, all items which, if they came adrift during a crash landing or ditching, might cause injury to the crew at their normal stations (unless already covered by the considerations of para.3.).

+ From J.A.C.Paper No.252.

5. Where possible the location of the above items in the aeroplane should be chosen so that full advantage is taken of existing structural members in supporting the items against crash loads.

6. Attention should be paid in the early stages of the design to eliminating risk of overturning due to harsh application of the brakes.

Overturning (landplanes only)

7. The following requirements for overturning are applicable only when called for in the Aeroplane Specification.

8. The structure shall be so designed that in the event of the aeroplane turning over on its back the cockpit and surrounding structure will not collapse and imprison or severely injure the crew. A crash pylon structure shall be provided for this purpose in the absence of any alternative protection for the crew.

9. The crash pylon or alternative protective framework and the surrounding structure shall have an ultimate factor of at least 2.0 under the following combination of loads when the aeroplane is at rest in the completely overturned position. The position most critical for the safety of the crew shall be taken. The following loads shall be considered,

2.0W vertically,
0 to 0.8W horizontally towards the nose, and
0 to 0.6W sideways in either direction,

where W is the maximum weight for landing.

10. Unbalanced moments shall be assumed resisted by inertia couples. Adequate fixing should be provided at the bottom end of the pylon to prevent the pylon folding over. Particular attention shall be paid to the effect of the loads on the doors and emergency exits in the vicinity of the cockpit.

RELEVANT M.O.S. PUBLICATIONS

Aircraft Design Memoranda

No.606 - Crash landing

Airworthiness Technical Notes

No.160 - Installation of Type "Z" pilot's safety harness

CHAPTER 310

GROUND HANDLING

FS/47

Amended by A.L.No.27

CHAPTER 310

GROUND HANDLING

Introduction

1. The requirements of this Chapter should be read in conjunction with the detail requirements for transport, handling and storage given in Chapter 802.

Slinging

2. The complete structure shall have an ultimate factor of at least 4.0 when hanging freely on the slinging gear at the weight defined for this case in the Aeroplane Specification. The sling shall also have an ultimate factor not less than 4.0.

Jacking

3. At the maximum all up weight quoted in the Aeroplane Specification, the aeroplane shall have an ultimate factor of at least 3.0 when it is supported on jacks or trestles.

Wings folding

4. When folding wings are incorporated the aeroplane shall have an ultimate factor of at least 3.0 - at the maximum all up weight quoted in the Aeroplane Specification - when it is at rest on the ground with the wings folded.

Beaching chassis

5. The main beaching chassis and tail trolley of a boat seaplane shall have an ultimate factor of at least 3.0 with the boat seaplane at the weight+ defined for this case in the Aeroplane Specification under the following conditions,-

(i) when standing on a level concrete apron,
(ii) when the main wheels of the chassis have just passed over the crest of a $7\frac{1}{2}^{o}$ slipway, and
(iii) when standing on a $7\frac{1}{2}^{o}$ slipway with the main wheels chocked.

+ This weight will usually be the normal operational load except on large boats.

Ground clearance

6. Propellers.-

(i) When the aeroplane is at rest with the nose or tail wheel on the ground, the tyres inflated to normal pressure and the undercarriage and tyres compressed to an extent corresponding to $\lambda_m g^+$ the propeller ground clearance shall not be less than 9 ins.

(ii) When the aeroplane is at rest with the thrust line horizontal, the tyres inflated to normal pressure, and the undercarriage and tyres compressed to an extent corresponding to $\lambda_m g,^+$ the propeller ground clearance shall not be less than $3\frac{1}{2}$ ins.

7. Control surfaces.- When the aeroplane is at rest with the nose or tail wheel on the ground, the control surfaces (including flaps) in the most adverse position, the tyres inflated to normal pressure, and the undercarriage and tyres compressed to an extent corresponding to $\lambda_m g,^+$ the ground clearance of any of the surfaces shall not be less than 6 ins.

8. Bombs.- For ground clearance requirements for R.A.F. aeroplanes reference should be made to Chapter 713.

9. Ground clearance requirements for Naval aeroplanes are given in S.I.S.No.371.

Towing

10. The design loads given below are those appropriate to the towing methods specified in Chapter 802. The loads for the main wheel unit towing points are, however, arranged to give some cover for the use of a single tow rope on one main unit when extra force is required to move the bogged wheel. When folding wings are incorporated the wheel loads shall be considered with wings both folded and spread.

11. Attachment points.- On all aeroplanes the main towing attachments shall be placed as low as possible on the inboard legs of main undercarriage units, preferably at axle height. The fitting provided shall be suitable for use with the shackle shown on S.I.S.No.63

12. When attachment points are provided for towing from nose or tail wheel units, they shall be kept as low as possible on the wheel unit. The fittings provided shall be such that a standard tow bar can be used (see S.I.S.No.63).

+ λ_m is defined in Chapter 304.

B

Towing (cont'd)

13. Overload release.- All tow bars for use on nose wheels or tail wheels shall embody overload releases to prevent the load transmitted to the aeroplane from exceeding a fixed known value. The operating load for each overload release shall be checked by test. The range of load within which each tow bar shall operate shall be stated on the drawings and shall be determined in accordance with the following considerations:-

(i) The maximum load of the range shall not exceed that chosen by the aeroplane designer for use in the design case of Fig.3A (which need not be greater than $0.3W_2$).

(ii) The minimum load shall not be less than $0.15W_2$, to prevent the too frequent operation of the release making the tow bar useless in practice

where W_2 is the maximum weight for take-off.

14. The release mechanism shall be of a type which cannot be adjusted by ground personnel to give a higher release load than that intended by the aeroplane designer. A weak link, or shear pin, is not an acceptable method of meeting the overload release requirement since the original link, or pin, may be replaced by a stronger one.

15. Strength.- The aeroplane structure shall have an ultimate factor of not less than 2.0 for the design cases, shown in Figs.1, 2 and 3a, and of not less than 1.5, for the design case of Fig.3b.

16. Stressing assumptions.- The applied towing force would in practice be balanced by a combination of some or all of the following,-

(i) frictional forces at points of tyre contact with ground,

(ii) gravity forces due to inclined or uneven ground surface,

(iii) redistribution of vertical reactions at wheels, and

(iv) linear and angular inertia forces.

So far as possible, the need for detailed consideration of all these possibilities on every aeroplane has been eliminated by specifying detailed stressing cases which, while not represent-

Towing (cont'd)

ing accurately any one particular condition, will normally cover all reasonable conditions. In certain instances these cases may appear inapplicable, and proposals for alternative stressing assumptions using the same basic towing loads should then be submitted to The Director, R.A.E. (S.M.E. Dept.), for consideration.

17. The tyre and oleo deflections may usually be assumed the same as for the aeroplane standing on level ground with C.G. position appropriate to the maximum take-off weight. An exception arises when the geometry changes considerably under towing loads: appropriate allowance for oleo deflection, etc., should then be made.

18. The design loads quoted for main undercarriage towing points (Figs.1 and 2) will usually be critical only for the lugs themselves and their attachments, but the undercarriage and its attachments to the airframe should be checked for each of the two independent assumptions in paras. 19 and 20 below.

19. Assume zero tail-wheel reaction and towing load $0.15W_2$ at each main wheel unit balanced by a drag load $0.15W_2$ at each main wheel axle, together with appropriate reactions at the undercarriage attachments to the airframe. Include also a vertical load $0.5W_2$ at each main wheel axle and the specified ultimate factor 2.0.

20. Assume zero tail-wheel reaction and towing load $0.15W_2$ at each main wheel unit balanced entirely by linear inertia force $0.3W_2$ at aeroplane C.G. Include also a vertical load $0.5W_2$ at each main wheel axle and the specified ultimate factor 2.0. The couples due to offset of these loads may be assumed balanced by rotational inertia in pitch but this effect may be ignored so far as stressing is concerned.

21. Figs. 3A and 3B are intended for application when the tow-bar is attached to a swivelling nose or tail wheel unit so that steering is automatically accomplished. In the first case (Fig.3B) the tow-bar is intended to be assumed in the in-line position but the ranges of drag and side load are such as to cover towing on a straight or slightly curved path. Under either condition the values of drag and side load at the tail wheel (or nose wheel) may vary widely due to local ground variations, and the combination which gives the worst stressing condition will depend very much on the geometry of the tail unit (e.g. whether cantilever or articulated). Preliminary consideration of a particular design will probably show which case needs detailed examination. The single case shown in Fig.3B with tow-bar at 45° is intended to cover turning with the tow-bar at angles up to but not exceeding 90° from the normal central position.

22. It is not considered necessary to provide for pushing the aeroplane by the tow-bar. Sufficient strength in the reverse direction should, however, be provided to cover the case

C

Towing (cont'd)

of the aeroplane trying to over-run the tractor. A factor of 2 under reversed loads 20% of those shown in Fig.3A should be regarded as a minimum practicable value.

23. In addition to the above conditions the attachment of the tow-bar to the wheel unit should be considered for the loads likely to arise when the tow-bar is used to swivel the wheel unit, without motion of the aeroplane as a whole. The resisting moment due to ground friction may, if test data is not available, be taken as $0.2 R^{1.5}$ lb.ins. where R is the static load on the wheel. To this should be added the resisting moment in the unit (i.e. that due to anti-shimmy and self-centring devices), together with an allowance for bearing friction. Factors of 2.0 shall be achieved.

(Para.24 has been deleted)

FIG. 1

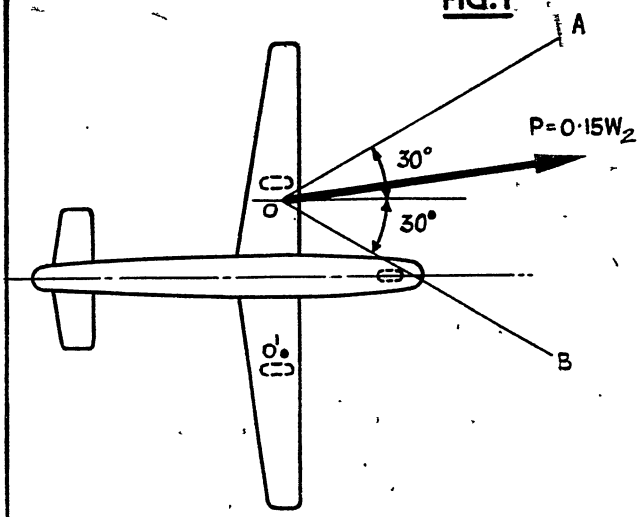

Notes
1. P acts in any direction between OA and OB.
2. OA is at 30° to ℄ or just clear of main-wheel if this gives smaller angle
3. OB is at 30° to ℄ or just clear of nose-wheel unit if this gives smaller angle

FORWARDS TOWING FROM MAIN WHEEL UNITS
(APPLICABLE TO AEROPLANES WITH EITHER NOSE OR TAIL WHEELS)

FIG. 2

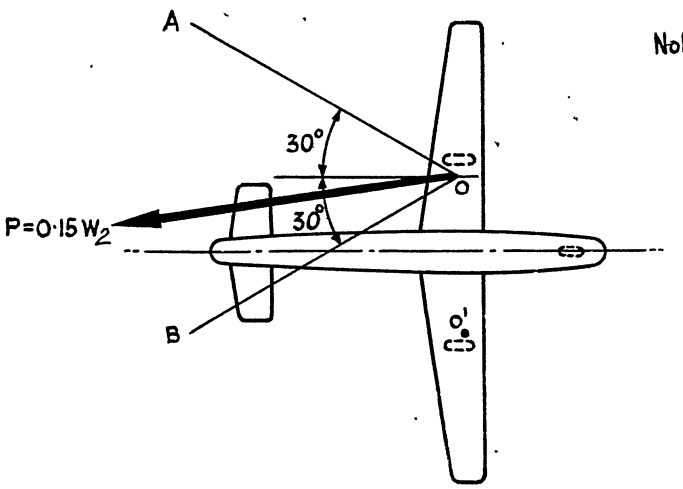

Notes
1. P acts in any direction between OA and OB
2. OA is at 30° to ℄ or just clear of main-wheel if this gives smaller angle
3. OB is at 30° to ℄ or just clear of tail-wheel unit if this gives smaller angle

BACKWARDS TOWING FROM MAIN WHEEL UNITS
(APPLICABLE TO AEROPLANES WITH EITHER NOSE OR TAIL WHEELS)

F.5/50

FIG. 3A

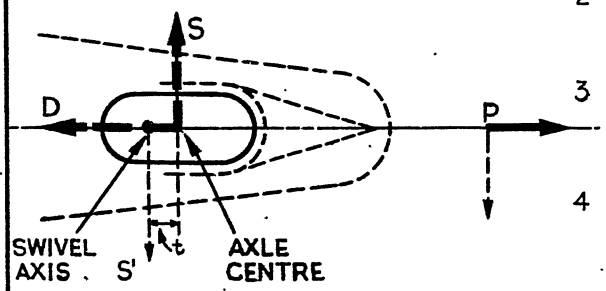

Notes: 1 Wheel and tow-bar central

2 Towing load . P = Operating load for overload release.

3 Vertical load R = max. static load

4 Loads D (at axle) and S (at ground) to be considered with values from zero to R and zero to R/2 respectively.

5 Assume S = S' (i.e. a long tow bar) and balance couple St by additional loads at tow-bar attachments

6 Assume fuselage held rigidly at wing attachments

FIG. 3B

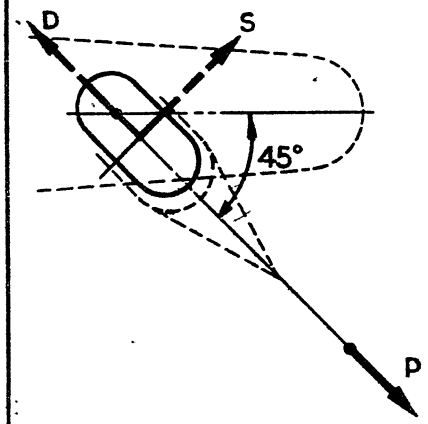

Notes. 1 Wheel and tow-bar at 45° to ℄

2 Towing load P = Operating load for overload release.

3. Vertical load R = max. static load

4 Loads D (at axle) and S (at ground) to be considered with values from O to R and O to R/2 respectively

5 Assume S = S' (i.e. along tow-bar) and balance couple St by additional loads at tow-bar attachments

6 Assume fuselage held rigidly at wing attachments.

TOWING FROM SWIVELLING WHEEL UNIT BY RIGID TOW-BAR

(APPLICABLE TO AEROPLANES WITH EITHER NOSE OR TAIL WHEELS)

CHAPTER 311

PICKETING AND MOORING

Note.- The subject matter of this chapter was previously contained in Chapters 3 and 11.

FS/66

CONTENTS

	Para.
General	1
Standard system of picketing	3
Location of picketing points -	
Undercarriage	5
Front wheel	7
Tail	9
Main plane	11
Fuselage	13
Strength of picketing points -	
Three main points	15
Secondary main plane and tail points	16
Secondary mid-fuselage point	17
Lugs or shackles -	
Main points	18
Secondary points	19
Design of controls for parking -	
General	20
Load distribution	21
Factors	22
Notation	23
Aileron	24
Elevator	26
Rudder	27
Design of controls for picketing	28

CHAPTER 311

PICKETING AND MOORING

General

1. The requirements of this chapter are to enable aeroplanes to be picketed on standard anchorages and to allow for temporary parking when holding down gear is not used.

2. Operational requirements and policy are given in Chapter 100. The following requirements are to ensure:-

(i) Correct location and adequate strength for the holding down points on the aeroplane.

(ii) Adequate strength for the control systems.

Standard system of picketing

3. The standard system of picketing provides for securing the aeroplane at three main and at two or more secondary points. Each of the three main points is in the neighbourhood of a wheel, one of them being at the tail wheel or the front wheel as appropriate. The secondary points are -

(i) For all types of aeroplanes, one on each main plane.

(ii) For large aeroplanes, one approximately midway between undercarriage and tail.

(iii) For aeroplanes with nose wheel type undercarriages, one in the neighbourhood of the tail plane.

4. ~~The lashings to points (i) and (iii) incorporate shock~~ absorbers, $\frac{1}{2}$ ton size for light types of ~~aeroplanes and 1 ton~~ size for medium and heavy ~~bombers. The object of the shock absorbers is to keep the~~ aeroplane as steady as possible and to ~~prevent "snatching" in gusty weather.~~

Location of picketing points

5. Undercarriage.- The two main undercarriage picketing points should be above the shock absorber struts, so that tension in the lashings will put the struts in compression. It is convenient to have points both on the inner and outer sides of each half of the undercarriage. If this presents difficulties

Location of picketing points (cont'd)

a single point on each half of the undercarriage is enough, provided that it is on the outer side if the wheel track is less than 20 ft. and on the inner side if more than 20 ft.

6. Rope lashings from each picketing point are not to foul any part of the aeroplane when such lashings are within the segment of a cone, whose apex is the picketing point, the segment being defined by the following angles at the apex.

(i) In plan (on the inner or outer side of the wheel as the case may be) 150°, between 10° to 160° to a line pointing directly forwards, and

(ii) In elevation 30°, between vertically downwards and 30° to the vertical.

7. Front wheel.- For aeroplanes with nose wheel type undercarriages, thefront wheel picketing point must be on the under side of the fuselage. It may be either a single point on the centre line of the fuselage or two points placed symmetrically about the centre line. The points must be above the shock absorber strut so that tension in the lashings will put the strut in compression.

8. Rope lashings from the picketing point or points are not to foul any part of the aeroplane, excepting the wheel and shock absorber, when the lashings are within a circular - sectioned cone whose apex is the picketing point whose axis is vertical and whose semi-vertical angle is 30°.

9. Tail.- The tail picketing point is to be on the under side of the fuselage. It may be either a single point placed on the centre line of the fuselage or two points placed symmetrically about the centre line. In the case of aeroplanes fitted with a tail wheel, the point is to be above the shock absorber strut so that tension in the lashings will put the strut in compression.

10. Rope lashings from the picketing point or points are not to foul any part of the aeroplane, excepting the wheel, in accordance with provisions similar to those given in para.8

11. Main plane.- There should be a picketing point on each outer main plane (the lower main plane only in the case of bi-planes) at a position approximately two-thirds the distance from the undercarriage to the plane tip and in the neighbourhood of the main spar.

Location of picketing points (cont'd)

12. Rope lashings from the point are not to foul any part of the aeroplane in accordance with provisions similar to those given in para.8.

13. Fuselage.- When the distance from the main wheels to the tail wheel (or to the tail plane point in the case of aeroplanes having nose wheel type undercarriages) exceeds 36 ft., an additional secondary picketing point is to be provided approximately mid-way between these two points. The point can be either a single point on the centre line of the fuselage or two points placed symmetrically about the centre line.

14. Rope lashings from the picketing point or points are not to foul any part of the aeroplane in accordance with provisions similar to those given in para.8.

Strength of picketing points

15. Three main points.- The three main points and the surrounding structures are to have an ultimate factor not less than 2 when the aeroplane is held in a 90 m.p.h. wind, blowing from any direction. The assumptions may be simplified in assessing the aerodynamic lift, drag and side forces, provided that a reasonable allowance is made for possible error. For any direction of the wind it is permissible to assume that the resultant aerodynamic lift acts through the centre of gravity of the aeroplane and is equal to $\left(\frac{90}{V_s}\right)^2 W$, where:-

V_s ..... stalling speed (m.p.h.) with flaps up.
W ..... all-up weight (lb.) of the aeroplane appropriate to V_s.

16. Secondary main plane and tail points.- The secondary main plane points for all aeroplanes and secondary tail point for aeroplanes with nose-wheel type undercarriages, and the adjacent structure are to have an ultimate factor of not less than 2 when the load in the lashings is one-quarter the weight of the aeroplane or 1 ton, whichever is the less.

17. Secondary mid-fuselage point.- The strength of the secondary point on the fuselage mid-way between the undercarriage and tail, as provided for in para.13, is left to the discretion of the designer.

AP 970 Design Requirements for Aeroplanes AL25-32 19460801 OCR.pdf Page 25

Chapter 311
~~Issued with A.L.No.12~~
Amended by A.L. No. 21

Lugs or shackles

18. Main points.- The three main picketing points must make provision for taking sufficient lashings of 2 inch manila rope to withstand the factored loads corresponding to the forces specified in para15, assuming the rope to have a strength of 15 cwt. The form of the lug or shackle should be such that it causes the minimum air drag when not in use during flight.

19. Secondary points.- The secondary picketing points need only make provision for a ~~spliced wire loop~~ single 2 manilla rope lashing. The form of the lug or shackle should cause the minimum air drag when not in use during flight.

Design of controls for parking

20. General.- The following requirements are intended to prevent failures in the control surfaces and systems of an aeroplane when parked tail-to-wind. The requirements are based on a wind speed of 40 m.p.h. and on wind tunnel tests which indicate that the effect of a balance portion in front of the hinge is of small importance. Locking of control systems is also required see Chapter 100.

21. Load distribution.- When estimating the strength of the control surface itself, a linear chordwise distribution of load is to be assumed varying from a maximum at the trailing edge to zero at the hinge line.

22. Factors.- The relevant control surface and circuit are to have a proof factor of at least 1.25 and an ultimate factor of at least 2.0 in each of the loading conditions given below. These factors are to be realized both when the pilot's control is locked and when it is free to move to the full extent allowed by the stops+ unless otherwise stated.

23. Notation.- The following notation is used in the requirements given below:-

H ..... applied hinge moment (lb.ft.)
c ..... mean chord (ft.) of the control surface aft of the hinge line.
S ..... area of the control surface (sq.ft.) aft of the hinge line.

+ To cover taxying tail-to-wind.

Design of controls for parking (cont'd)

24. Aileron.- A hinge moment H_a is applied to each aileron in a direction tending to depress the surface, where

$$H_a = 3c_a S_a$$

This case need only be considered for the control column locked central.

25. A hinge moment, H_a, is applied to each aileron tending to raise one aileron and to depress the other, where

$$H_a = 2c_a S_a$$

26. Elevator.- A hinge moment, H_e, is applied to the elevator in a direction tending to depress the surface, where

$$H_e = 3c_e S_e$$

27. Rudder.- A hinge moment, H_r, is applied to the rudder, where

$$H_r = 4c_r S_r$$

Design of controls for picketing

28. The strength requirements for control surfaces and systems for picketing for protracted periods are based on a wind speed of 90 m.p.h. and need only be met when called for in the aeroplane specification. The distribution of aerodynamic loads on the control surfaces is to be assumed to be the same as that specified for parking, the magnitude of the loads however, are to be increased by $\left(\frac{90}{40}\right)^2 = 5.05$.

29. To avoid this case becoming determining on the structure external locking clamps (S.I.S.58) may be assumed, but based on the above load distributions the contractor is required to state, in the Rigging and Maintenance Notes, the number and location of clamps to be used on the various control surfaces, in order that the necessary factors of para.22 are obtained.

FS/69

PART 4
DETAIL DESIGN AND STRENGTH OF MATERIALS

(8123) T14097/2692 500 1/44 M46508 C & P 752

Issued on 1st Sept. 1941
(Re-issued on 1st Feb.1946)

PART 4

Detail design and strength of materials

CONTENTS

Chapter 400	General detail design
Chapter 401	Strength of materials
Chapter 402	Components
Chapter 403	Standard parts
Chapter 404	Fittings
Chapter 405	Processes and working of materials
Chapter 406	Castings

CHAPTER 400

GENERAL DETAIL DESIGN

A

Amended by A.L.No.34

CHAPTER 400

GENERAL DETAIL DESIGN

General

1. In the detail design of the aeroplane the different materials and parts shall be kept to a minimum consistent with structural efficiency and without unduly sacrificing structure weight. The design of parts and fittings of the aeroplane shall be such as to facilitate its manufacture in quantity.

2. Components and items of equipment shall have at least the same factor as the main structure in all the appropriate stressing cases. Local loads at points of attachment to the main structure should be carefully considered to ensure that the main structure is not unduly weakened thereby.

Standard materials

3. All drawings of Class 1 and 2 items (see Appendix I) shall be annotated so as to ensure that under normal inspection procedure the materials used will be in accordance with approved specifications. The drawings shall show the specification numbers of the materials; proprietary names shall not be used. Approved specifications include only,-

(i) the aircraft series of B.S. Specifications,

(ii) D.T.D. specifications,

(iii) specifications approved in writing by D.T.D. as appropriate to the particular case.

4. If the contractor proposes to use any material for a Class 1 or Class 2 item for which there is no approved specification he shall,-

(i) give D.T.D. written notice of his intention, and

(ii) give full information regarding physical properties of the material and its source of supply and provide samples for tests so that the suitability of the material from the design and supply aspect may be considered.

5. Within the limitations of para. 3 above, materials of the simplest and most easily obtainable kinds shall be used with due regard to weight and reliability.

6. In the case of Class 3 items the drawings shall be annotated to ensure that materials to tightly drawn specifications such as those in the "D.T.D." and "B.S. aircraft" series are not called for in applications where less rigidly controlled and therefore cheaper materials would be adequate. Even so it is desirable that some recognised specification (e.g. the B.S. general series) be referred to in most cases.

7. Standard sizes of sheet and strip have been agreed for aluminium alloys and details of these standard sizes are contained in A.D.M.430, to which reference should be made. Main structural members should not be made of duralumin sheet or tube thinner than 22 S.W.G. if positioned such that they are liable to receive handling loads in service. This does not apply to the skin and stiffeners of monocoque construction.

Standard parts

8. The requirements of the Standardisation Design Memoranda Series (S.D.M.), and A.D.M.500 shall be met. Where these requirements standardise a given item, no other item shall be employed to perform functions for which this standard item is suitable.

9. When a suitable item is not covered by the Standardisation Design Memoranda, but is available in one of the following series.-

(i) A.G.S. parts,
(ii) S.B.A.C. standard parts, or
(iii) B.S.I. standard parts,

such item shall be used.

10. All standard parts incorporated in the aeroplane shall be in accordance with the latest approved issue of the relevant drawings, but the issue number of such drawings shall not appear on the aeroplane drawings.

Airframe notices

11. Airframe notices shall not be used except where there are special reasons to the contrary. The relevant instructions shall be placed in the Aeroplane Handbook. Generally, necessary airframe notices are.-

(i) notices fitted in accordance with specific M.A.P. instructions,

(ii) instructions to which a pilot or crew may have a definite need to refer in the air,

(iii) emergency or warning notices, neglect of which is likely to cause damage to the aeroplane or injury to personnel, and

(iv) minor notices, which are not likely to need alteration, where identification of particular components or their method of operation would be difficult without such notices.

12. Emergency notices should be confined to operations relating to a real emergency. Where the instruction is adequately covered by periodical drill the notice should be considered redundant. Emergency notices should be direct and concise and all preamble should be avoided. Instructions to ground and maintenance staff should be placed in the manual where possible. Where such notices come under para.11(iii) they should be abbreviated by direct reference to the publication e.g. "Warning; before jacking here refer to A.P. ....."

B

13. Notices may have to be altered as an integral part of a modification or for other reasons and such alterations should be easy to effect without damage to the part or the surrounding structure. Such operational notices to pilot or crew should be arranged so that a ready substitute can be made, e.g. a card in frame or in some cases a stencil which can be painted out.

14. A notice should not be attached to any interchangeable part when it is not specially related to that part and would be equally effective on a more permanent part of the airframe, e.g. the type of fuel should not be noted on a filler cap.

15. Notices to identify a component, the nature of which is obvious, should be avoided. Blank spaces reserved for a component not actually fitted should not be marked, but covered by instructions in the manual.

16. Costly and ornamental plates shall be avoided. This applies particularly to proprietary articles and components made by sub-contractors. Essential notices shall be brief and to the point.

17. When brass identification labels are to be soldered on to steel tubes suitable for soldering (see Chapter 405) a non-corrosive flux complying with Specification No.D.T.D.599 shall be used, and the solder shall be continuous around the whole of the label. A note to this effect shall be included on all the relevant drawings. Alternatively, plastic labels or other methods of permanent identification, using non-metallic materials, may be employed.

Locking of nuts

18. The importance of nuts in aeroplanes is governed by the "Classification of Aeroplane Parts" given in Appendix I. Failure shall be interpreted as meaning the loosening of the nut sufficiently to remove all tension from the bolt.

19. Nuts used in Class I applications (see Appendix I) shall be locked to Standard A. Nuts used in Class 2 applications shall be locked to Standard A if the nut or its bolt is in contact with parts having relative motion such as would tend to loosen the nut; other nuts shall be locked to Standard A or to Standard B at the designer's discretion.

20. The following are acceptable methods of locking nuts to Standard A, (usually called "positive locking"),-

(i) split pins of nickel alloy to Specification No. D.T.D.268 in castellated nuts,

(ii) approved locking wire (nickel alloy to Specification No. D.T.D.268 or tinned copper or cadmium plated soft iron) through the nut or nut and bolt,

(iii) peening of the bolt end over the nut.

21. The following are acceptable methods of locking nuts to Standard B,-

(i) the use of "Stiffnuts" complying with the full test requirements of Specification No.A.D.114 (see also S.D.M.36),
(ii) double nuts, locked together,
(iii) grub screw(s) through the nut and bearing on the bolt,
(iv) spring locking washers,
(v) tab washers, or
(vi) any other device approved by R.A.E. as giving satisfactory locking properties.

22. The type of locking (whether A or B) shall be chosen with due regard to the frequency with which the nut will need to be removed during service. Peening-over of the bolt shall not be used in cases where removal of the nut is necessary during routine maintenance operations.

Locking of turnbuckles

23. Loss of tension in turnbuckles of Class 1 importance shall be prevented by the use of approved locking wire.

C

RELEVANT M.O.S. PUBLICATIONS

Aircraft Design Memoranda

No.472 - Approval procedure for parts and accessories
No.473 - Approval procedure for items made by approved firms and conforming to approved specifications
No.548 - Positive locking for A.G.S.and similar pipe couplings

Standardisation Design Memoranda

Introductory sheet and index

No.7 - Screw threads
No.36 - Stiffnuts

CHAPTER 401

STRENGTH OF MATERIALS

A

Amended by A.L.No.28

CHAPTER 401

STRENGTH OF MATERIALS

General

1. The data given in this Chapter are derived from tests aimed at determining representative values of proof and ultimate stress for materials in common use in aeroplane structures. The aim is to present in this Chapter an up-to-date summary of those values which are considered to be satisfactory as a basis for design, together with the minimum explanation necessary to ensure their proper application. Throughout the tables presenting these values the basic material specification number only is given and shall be taken as implying the latest issue of the specification. Exceptionsto this rule occur where a new issue of specification has introduced changes in the strength properties of the material. In such cases the issue numbers or letters of the specifications are given.

2. The tables give values which may be expected from a material just complying with its minimum ultimate stress as stated in the material specification. To achieve this, all test values have been adjusted on the basis of control tensile tests and then averaged; the test reports explain in detail how this principle has been applied. It should be noted that unless otherwise stated, the values given in the tables correspond to loading of a test piece under laboratory conditions approximating to the ideal as regards uniformity of stress distribution and absence of eccentricity or secondary stress. Proper allowance must therefore be made for such departures from these ideal conditions as inevitably occur in practical structures, and the designer may do this by the use of either suitably refined stressing methods or allowable design stresses lower than those given in the tables. The basic requirement of para.3 is necessary because the numerical values of the factors specified for the aeroplane as a whole are based on the assumption that the strength of the materials used will not be below the specified minimum values.

Basic requirement

3. The values of allowable design stress used for the purpose of quoting reserve factors shall, in the absence of direct evidence, not be higher than those given in the tables of this Chapter.

Tension

4. The ultimate factor should be based on the ultimate tensile stress. The proof factor should be based on the 0.1% proof stress.

(Paras.5 to 9 inclusive, reserved)+

+ Throughout this Chapter blocks of paragraphs have been reserved to enable additions to be made under relevant sub-headings.

Compression

10. The ultimate factor for struts should be estimated from strut formulae based primarily upon the 0.2% proof stress. It can generally be assumed that compliance with the ultimate factor requirements will automatically ensure compliance with the proof factor requirement. For other members in compression application of the same rule will generally give safe results.

(Paras.11 to 19 inclusive, reserved)

Bending

20. For members of circular cross section it will usually be acceptable to calculate the ultimate strength in pure bending on a stress equal to the 0.1% proof stress, increased by half the difference between 0.1% proof stress and the ultimate stress. Compliance with the proof factor condition will then follow automatically. This will not be applicable to tubes of diameter/thickness greater than 80 and for such tubes an ad hoc test will usually be required, carried to complete failure. For robust and stable sections application of the same rule will generally give safe results.

21. The remarks in para.20 are, in general, applicable to wrought materials but not to cast materials.

(Paras.22 to 29 inclusive, reserved)

Shear

30. The strength of bolts and pins in double shear in hard plates may be calculated from the formula,-

$$f_s = f_{so} \left\{ 1 - 0.0184 \left(\frac{d}{t}\right)^2 \right\}$$

where d ... in. ... Diameter of pin
t ... in. ... Thickness of central plate

31. The above formula is derived from tests on pins in double shear. The test apparatus was arranged so that the thickness of each outside plate was never less than 0.75 t, and thus the maximum bearing stress occurred in the central plate. The tests covered values of $\frac{d}{t}$ up to 4. (See also diagram on Table 7).

32. Values for the basic shear stress f_{so} in bar materials are included in Tables 1, 2 and 3. This shear stress should be associated with the specified ultimate factor; compliance with the proof factor requirement may then be assumed so far as shear is concerned.

33. Where basic shear stresses are not given in the tables, and if test information is not available, the value of basic shear stress for wrought steels and aluminium alloys in both bar and sheet form may be obtained from the following formulae, provided the maximum tensile stress f_t is over the value given,-

Steels $f_{so} = 0.53\ f_t + 6.5$ (f_t over 25 tons/sq.in.)

Alumin. Alloys $f_{so} = 0.47\ f_t + 2.5$ (f_t over 10 tons/sq.in.)

34. Table 7 gives values in lb. of shear strength per face of a pin with a basic shear stress f_{so} of 10 tons/sq.in. For other materials, multiply by the basic shear stress f_{so} obtained from Tables 1 and 2 and divide by 10.

35. The values given in Table 7 are obtained from the formula,-

$$\text{Shear strength} = f_{so}\ A \left\{ 1 - 0.0184 \left(\frac{d}{t}\right)^2 \right\} \times 2240 \text{ lb.}$$

where A ... sq.ins. .... cross sectional area of pin

36. Where the thickness of the outer plates is less than 0.5t, the value of t should be taken as twice the thickness of the outer plates.

37. The above remarks refer only when $\frac{d}{t}$ is less than 4. Outside this range special tests will usually be necessary.

38. The values given are applicable even when the shear faces are some distance apart and the pin is unsupported between them and are also appropriate for pins in single shear provided that due allowance is made for stresses in the pin introduced by eccentricity of loading.

39. Joints involving one pin only are covered by the values given. Where more than one pin is involved allowance shall be made for the distribution of the load between the pins.

Torsion

40. The values given in the tables are based on the assumptions that, for tubes and bars of circular cross section,-

(i) The shear stress fq is calculated from the formula,

$$\text{shear stress } fq = \frac{16D}{\pi(D^4 - d^4)} \times \text{Torque}$$

where D and d are the external and internal diameters respectively in inches, and torque is in tons inches.

(ii) the shear strain is measured at the extreme fibre, so that if θ is the twist in radians per unit length of tube, the shear strain is given by $D/2 \times \theta$, and

(iii) the torsional proof stress q_1 is defined as that stress which causes a plastic deformation of 0.001 radian on a length equal to the external diameter.

41. Failure is dependent on the proportions of the tube or bar, thus,-

(i) for thick walled and solid sections the failing stress is defined as that stress beyond which increase of shear deflection takes place without any corresponding increase of torque,

(ii) for thin walled sections failure takes place through collapse by buckling of the tube wall and in such cases the proof stress quoted in the Tables may not be attainable, and

(iii) for intermediate sections failure occurs through a combination of plastic shear and elastic buckling.

42. Proof stresses in shear (q_1) are independent of the ratio D/t of the tube and the design figures are given in the Tables in tons/sq.in.

43. Ultimate shear stresses for design purposes are given in terms of D and wall thickness t by the empirical formula,-

$$f_q = a - b\left(\frac{D}{t}\right) + c\left(\frac{D}{t}\right)^2 \quad \text{tons/sq.in.}$$

44. If, for reasons indicated in para.41 q_1 is found to exceed f_q, the lower figure should be used.

45. In the above formula, q_1, a, b and c are constants for a given material over the stated range of D/t. Outside of this range the constants are not applicable and special tests will usually be necessary.

(Paras.46 to 49 inclusive, reserved)

Bearing

50. The data given here are derived from a series of tests of joints in plates and tubes of various materials, the test pieces being as shown in figs.1 and 2. The investigation covered the effects of clearances, lateral support (such as that given by bolt heads or adjacent plates of comparatively hard material), curvature of the bearing surfaces and ratio of pin diameter to plate thickness.

51. For all structural joints except those covered by paras.70 to 76 inclusive the use of the properties given in the tables, in conjunction with the provisions of paras.52 to 55, constitutes an acceptable method of checking

C

compliance with the proof factor requirement. Compliance with the ultimate factor requirement may then be assumed, so far as bearing is concerned, except for certain cases mentioned in para.53.

52. The bearing stress of a pin in a hole is defined as P/dt, where P is the load, d the pin diameter, and t the thickness of plate. This stress shall not exceed the maximum acceptable proof bearing stress defined below, appropriate to the type of joint considered, where the load P is that appropriate to proof loading conditions:-

(i) For all joints other than those mentioned in sub-paragraph (ii) below, the maximum acceptable proof bearing stress is that which will produce a permanent deformation of the hole+ equal to 1.0% of its original diameter. This stress is denoted in the tables by b_{10}.

(ii) For joints subject to vibration and/or where loads of the order of the design loads are likely to arise frequently in both directions, the maximum acceptable proof bearing stress will be some value less than b_{10}. A value varying between 0.5 and 1.0 times b_{10} may be used, the actual value being fixed at the discretion of the designer after consideration of the magnitude of any load reversal which may occur and of the degree of vibration which may be present.

53. Where the plate or tube wall providing the bearing surface is adequately supported laterally, the proof bearing stresses given in the tables may be used for all values of d/t up to 10. They may also be used for cases where there is no lateral support provided the ratio d/t does not exceed 6. For higher values of d/t special tests will be necessary and compliance with the ultimate factor requirements must also be checked. For this purpose ultimate bearing stress is defined as that stress beyond which the bearing surface ceases to take more load.

54. The values of b_{10} given in the tables are applicable to cases of pins and bolts having clearances in the hole up to 2% of the diameter.

55. Where values of b_{10} are not given in the tables, and in the absence of direct test evidence, the following values may be used for both supported and unsupported cases, under the conditions of paras.53 and 54 provided that the ratio f_t/p_1 for the material does not exceed 1.8,-

$$b_{10} = 1.5\ p_1$$

(Paras.56 to 59 inclusive, reserved)

+ The total extension of the joint will include the hole deformation of the opposing plate(s).

Riveted joints

60. The values given in the tables for the failing strengths of single riveted lap joints are based upon tests on joints of the type indicated in Figure 1. The tests were designed to establish the mean strength and scatter of strength for such joints, allowing for variations in practical conditions of manufacture.

61. The values given for 2.0% bearing strengths are based upon the results of load-deflection tests on pins in holes in sheet of the material specified in the table.

62. The use of these values in accordance with the provision of paras.63 to 65 inclusive, constitutes an acceptable method of checking compliance with the ultimate and proof factor requirements for riveted joints.

63. In the design of riveted joints, consideration must be given both to the failing strength of the joint and to the permanent bearing deformation of the plate in the neighbourhood of the hole which will occur under proof loading conditions.

64. In association with ultimate loading conditions the failing loads given in the tables are acceptable values for use in the design of all types of riveted joint provided the loads on individual rivets are correctly estimated. In cases where the number of rivets is large and the load is shared uniformly between them, and provided that the load distribution would not be materially altered by the failure of one rivet, it is satisfactory to increase the failing loads given in the tables by 10%,but not the bearing loads.

65. Under proof loading conditions the bearing stress produced by the rivet in the plate shall not exceed the relevant maximum acceptable proof bearing stress given below:-

(i) For all joints other than those mentioned in sub-paragraph (ii) below the maximum acceptable proof bearing stress is that which will produce a permanent deformation of the hole+ equal to 2.0 per cent of its original diameter.

(ii) For joints subject to vibration and/or where loads of the order of the design loads are likely to arise frequently in both directions the maximum acceptable proof bearing stress will be some value less than that causing 2.0% permanent deformation of the hole (as defined above). A value varying between 0.5 and 1.0 times this 2.0% permanent deformation stress may be used, the actual value being fixed at the discretion of the designer, after consideration of the magnitude of

+ The total extension of the joint will include the hole deformation of the opposing plate(s).

D

Riveted joints (cont'd)

any load reversal which may occur and of the degree of vibration which may be present.

The values of bearing loads given in the tables correspond to 4/3 times the proof bearing stresses as defined in (i) and may thus be compared directly with the failing loads for the same riveted joint.

66. Test work is proceeding on the effects of repeated loading on riveted joints, and it is expected that this will produce further data to supplement the proof criteria defined in para.65.

(Paras.67 to 69 inclusive, reserved)

Lugs

70. The following paragraphs and associated values in Table 20 apply to Lugs of the type shown in Figure 4 within the limitations given below (whether or not the faces of the lug are supported).

(i) Square or round ended lugs with geometry satisfying simultaneously the following three conditions:-

(a) $\frac{a}{c}$ from 0.7 to 3.7 inclusive,

(b) $\frac{a}{d}$ from 1.5 to 2.5 inclusive,

(c) $\frac{d}{t}$ from 1.0 to 8.0 inclusive.

(ii) Wrought material of elongation of not less than 7% in the appropriate standard tensile test.

For lugs not satisfying these conditions "ad hoc" tests will usually be necessary.

71. Definition of lug stresses.- The data are presented in terms of lug stresses and these are defined as follows.-

Lug tensile stress ..... tons/sq.in. ... $\frac{P}{2\,ct}$

Lug shear stress ..... tons/sq.in. ... $\frac{P}{2\,at}$

Lug bearing stress ..... tons/sq.in. ... $\frac{P}{dt}$

Lugs (cont'd)

where P is the load in tons transmitted through the pin, and the dimensions a,c,d, and t, as shown in Figure 4, are in inches.

72. 1.0% tensile and shear proof stresses are entered in Table 20 and these are defined as stresses arising from loads transmitted by the pin which produce a permanent deformation of the hole equal to 1.0% of the original diameter as measured by departure from the load/deflection line obtained in the first loading.

73. 1.0% bearing proof stresses are entered in Table 20 and are related to the deformations detailed in para.52 (with the exception that the nomenclature b_{10} is not employed).

74. Evaluation of lug stresses.- Where values are not given in Table 20, and in the absence of direct test evidence, the following formulae may be used for the evaluation of proof and failing stresses:-

	1.0% Proof Stress	Failing Stress
Tensile	$0.9p_1$	$0.9f_t$
Shear	$0.43p_1$	$0.46f_t$
Bearing	$1.45\overset{+}{p}_1$	$1.85f_t$

75. Ultimate stress criterion.- The lug tensile, shear, and bearing stresses based on the ultimate load shall not exceed the acceptable maximum tensile and shear stresses entered in Table 20, or obtained from the formulae of para.74 unless direct test evidence establishing the higher values has been produced.

76. Proof stress criterion.-

(i) For lugs other than those mentioned in sub-paragraph (ii) below, the maximum lug tensile, shear, and bearing stresses based on the proof load shall not exceed the acceptable 1.0% proof stresses entered in Table 20 or obtained from the formulae of para.74 unless direct test evidence establishing the higher values has been produced.

(ii) For lugs subject to vibration and/or where loads of the order of the design loads are likely to arise

+This value differs from that quoted in para.55 because it is applicable only to lugs in the range of $\frac{a}{d}$ from 1.5 to 2.5 whereas the value given in para.55 is for cases where bearing alone is high, the $\frac{a}{d}$ ratio being of the order of 9.0.

E

Lugs (cont'd)

frequently in both directions the maximum lug tensile, shear, and bearing stresses based on the proof load will be some value less than the acceptable 1.0% proof stresses of sub-paragraph (i) above.

A value ranging 0.5 and 1.0 times these acceptable proof stresses may be used, the actual values being fixed at the discretion of the designer.

(Paras.77 to 79 inclusive, reserved)

Notes

80. It is intended to include all the important properties of the materials listed in the tables. Where blanks are shown at present the properties are under review and values will be issued later.

81. Castings and welded materials.- No values are given in the tables for castings or for materials in the welded state. These are under review and figures will be issued later.

82. Forgings.- Strength data for forgings are quoted from test bar results.

83. Light alloys.- Strength data for light alloys are given in relation to longitudinal and not transverse loadings, unless specifically stated.

84. Timber.- All stresses quoted for timber in Table 4 are in lb/sq.in. Tension and compression are for end grain and shear is along the grain unless otherwise stated.

Notation

85.

b_{10}	.... tons/sq.in.	....	1.0% proof bearing stress.
E	....10^6 lb/sq.in.	...	Young's modulus.
e	.... per cent	....	Elongation
f_b	.... tons/sq.in.	....	Ultimate bearing stress.
f_c	.... tons/sq.in.	....	Compressive stress.
f_q	.... tons/sq.in.	....	Ultimate torsional shear stress.
f_s	.... tons/sq.in.	....	Ultimate shear stress.
f_{so}	.... tons/sq.in.	....	Basic shear stress.

Notation (cont'd)

f_t	....	tons/sq.in.	Ultimate tensile stress.
G	....	10^6 lb/sq.in. ..	Modulus of rigidity.
p_1	....	tons/sq.in.	0.1 per cent tensile proof stress.
p_2	....	tons/sq.in.	0.2 per cent tensile proof stress.
p_5	....	tons/sq.in	0.5 per cent tensile proof stress.
q_1	....	tons/sq.in.	0.1 per cent proof torsional shear stress.

F

TESTS ON RIVETED JOINTS

Details of single riveted lap joint test piece

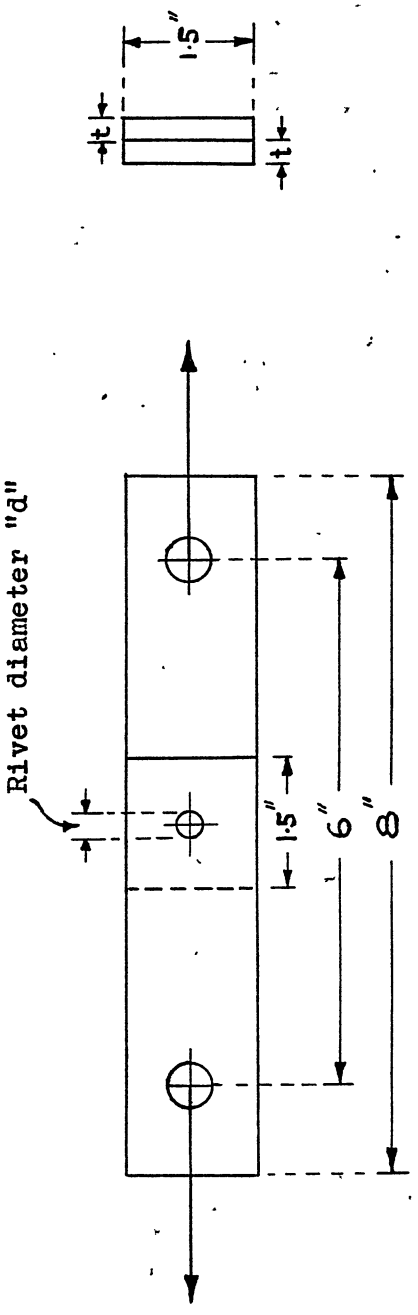

Fig.1.

F.S/54

LUG TYPE TESTS FOR SHEET MATERIALS

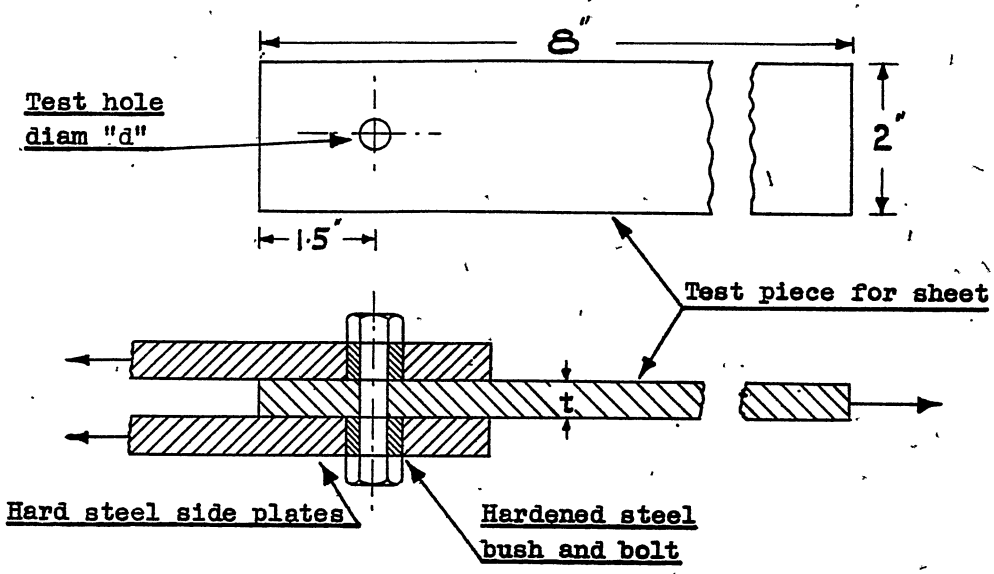

Note - d/t in tests fell between 3.3 and 4.5

Fig. 2.

PLUG TYPE TESTS FOR BAR AND TUBE MATERIAL

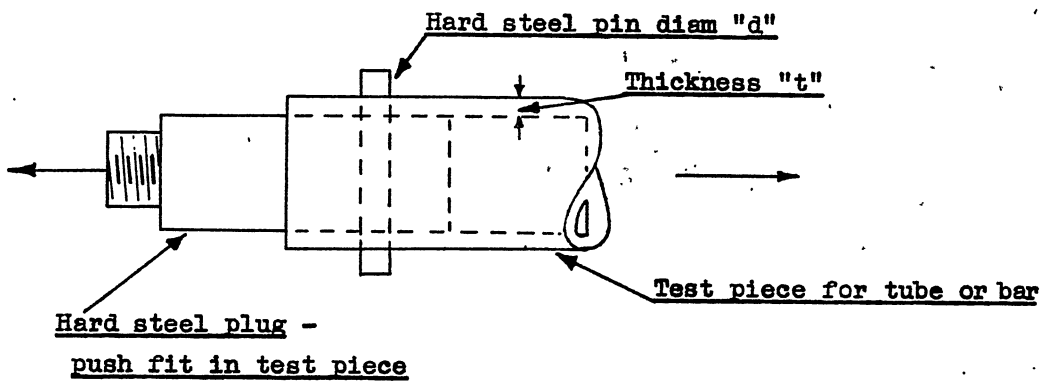

Note - d/t in tests was approximately constant at 5.0

Fig. 3.

BEARING STRESS - TEST PIECES.

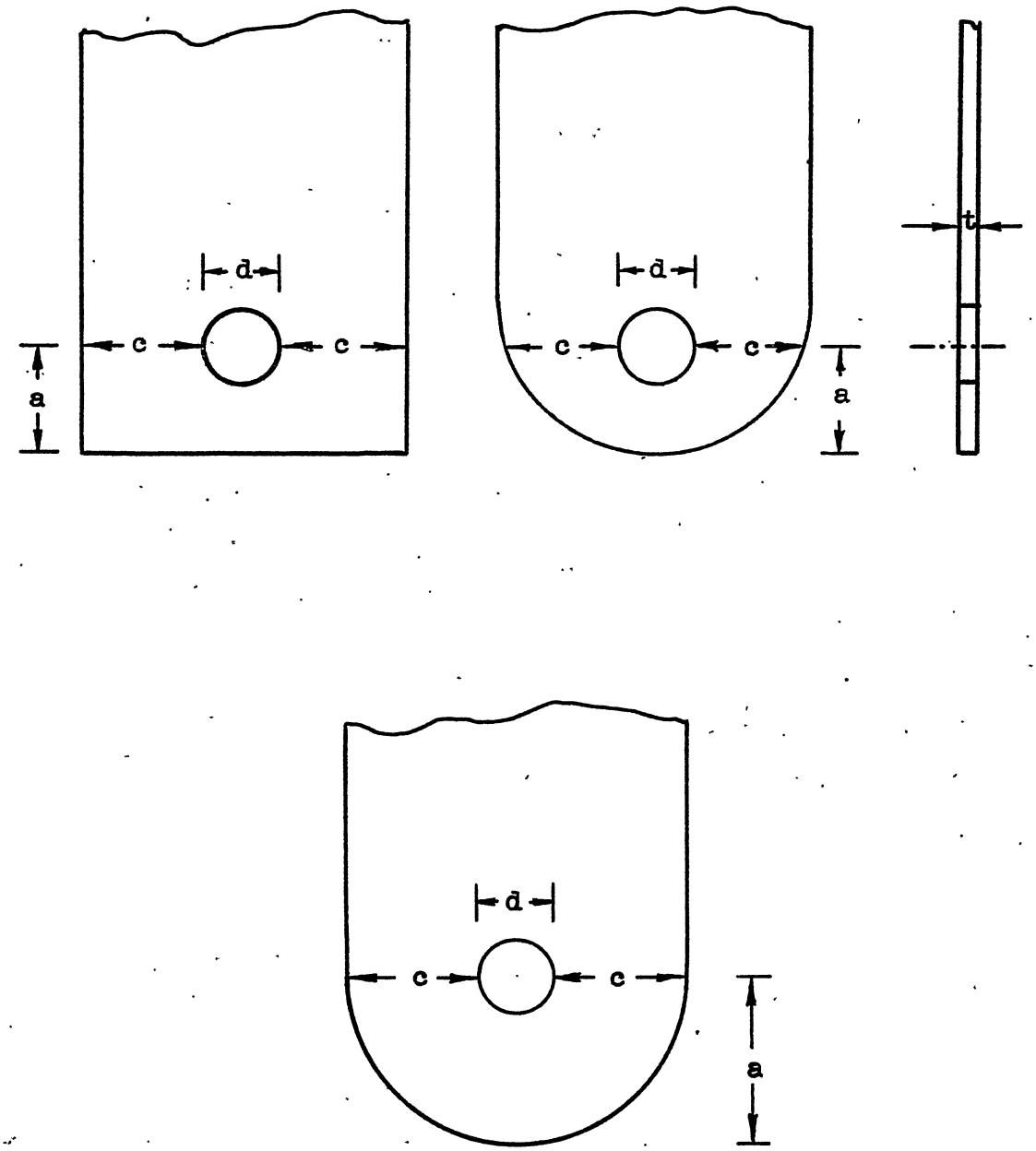

Fig.4

LUG STRESSES
TYPES AND PROPORTIONS COVERED

H

AP 970 Design Requirements for Aeroplanes AL25-37 19460801 OCR.pdf

TABLE I - STEELS

Specn.	Tension					Comp	Shear	Torsion							Bearing	Remarks
								Range d/t			f_q					
	f_t	p_1	p_2	p_5	E	f_c	f_{so}	From	To	q_1	a	b	c	G	b_{10}	
SHEET AND STRIP																
S.3	28	16	16.5	17	30										29	Before welding
S84	20	12	12	12.5	30										19	
DTD.60	55	40	43	45	29										74	
DTD.124	45	40	40.5	40.5	28										62	Hardened and tempered.
	30															Softened.
DTD.137	57	50	50	50.5	28.5										86	Hardened and tempered.
	37															Softened.
DTD.138	70	65	66	67	28										108	Hardened and tempered.
	35	23.5	24	24	30											Annealed
DTD.158		35														
DTD.166	52	40	42	45	28.5											
DTD.171	35	15	16.5	18.5	28										36	
DTD.195		55														Hardened and tempered.
TUBES																
T.1	35	30	30	30	28.5			10	65	17.2	27.3	.333	.0026	12.1		
T.2	85	73	78	83	29			15	65	36.0	61.0	.575	0	10.8	97	
T.26	20	10.8	11.0	11.2	29											Softened.
	28	24	24	24	28			8	67	13.9	19.3	.081	0	12.0		Half-hard.

Chapter 401
Amended by A.L.No.34

TABLE I - STEELS (CONT'D)

Specn.	Tension					Comp	Shear	Torsion							Bearing	Remarks
								Range d/t			f_q					
	f_t	P_1	P_2	P_5	E	f_c	f_{so}	From	To	q_1	a	b	c	G	b_{10}	
TUBES (CONT'D)																
T.35	35	30	30	30	28.5											Before welding.
T.45	45	40	40	40	28.5			10	65	23.7	34.1	.312	.0024	12.1	55	Before welding.
T.50	50	44.5	45	45.5	28			10	67	26.0	33.1	.154	0	11.7	60	
DTD.41	30	26.5	27	27.5	28			10	67	15.0	20.5	.072	0	11.9		Before welding.
	24	14						15	70	7.9	16.6	.269	.0019	11.2		Annealed.
DTD.102	35	28	29	30.5	29			12	67	14.9	23.1	.125	0	12.1		
DTD.178	45	40	40	40	28.5			10	65	23.7	34.1	.312	.0024	12.1	55	Before welding.
DTD.199	50	40	45	46.5	30.5			10	60	21.0	40.9	.763	.0072	11.4		
DTD.207	35	14	15	17	27			12	30	7.7	42.1	2.07	.0333	11.0		
								30	65	7.7	12.6	.086	0	11.0		
DTD.211	50	37	45	46	25.5			10	65	19.1	37.7	.268	0	10.9		
DTD.254	75	65	68	70	28.5			12	55	35.0	50.0	.270	0	11.1		
DTD.305	30	18	18	19	29.5			10	65	10.3	21.4	0.260	.0020	12.0		
DTD.347	50	45	45	47	30.5			15	65	26.3	30.2	0.076	0	12.1	62	Before welding 14G and thinner
DTD.359	45	40	40	42	30			8	20	23.8	29.7	.140	0	12.4		Before welding. Thicker than 14G.
DTD.408	75	67	68	71	29.5			10	60	37.6	49	.400	0	12.1		Before welding. Hardened and tempered.
DTD.432	28	24	24	24	28			8	67	13.9	19.3	.081	0	12.0	30	Half-hard

AP 970 Design Requirements for Aeroplanes AL25-37 19460801 OCR.pdf

AP 970 Design Requirements for Aeroplanes AL25-37 19460801.OCR.pdf Page 285

TABLE I - STEELS (CONT'D)

Specn.	Tension f_t	p_1	p_2	p_5	E	Comp f_c	Shear f_{so}	Torsion Range d/t From	Torsion Range d/t To	q_1	f_q a	f_q b	f_q c	G	Bearing b_{10}	Remarks
TUBES (CONT'D)																
DTD.501	35	30	30	30	28.5			10	65	17.2	27.3	.333	.0026	12.1	43	Not to be welded unless subsequently heat treated.
DTD.503	18 25 28															3/16" o/d. 1/4", 5/16", 7/16" o/d. 3/8", 1/2" o/d.
DTD.507+	35	14	15	17	27			12 30	30 65	7.7 7.7	42.1 12.6	2.07 .086	.0333 0	11.0 11.0		Before welding.
DTD.535	35	30	30	30	28.5			15	50	17.0	26.0	.250	0	12.0	47	Before welding.
DTD.545	45	40	40	40	28.5			10	65	23.7	34.1	.312	.0024	12.1		Before welding.
DTD.563	35	30	30	30	30.5										41	
BARS, FORGINGS AND RODS																
S.1	35 35 35	27 21 17													. . 24	≯ 3/4 in. dia. ≮ 3/4 in. dia. ≯ 1 1/8 in. dia. ≮ 1 1/8 in. dia.
S.2	55	43	44	45	28.5		37.0	2	25	21.4	57.3	2.455	.0535	12	68	
S.6	35	20	20.5	20.5	28.5		24.5	2	25	13.2	37.8	1.17	.0194	12	36	
S.11	55	43	44	45	28.5		36.8								68	
S.14	32	15														
S.15	45	23														

+ Proof values are sensitive to rate of loading.

TABLE I - STEELS (CONT'D)

Specn.	Tension f_t	p_1	p_2	p_5	E	Comp f_c	Shear f_{sc}	Torsion Range d/t From	To	q_1	f_q a	b	c	G	Bearing b_{10}	Remarks
BARS, FORGINGS AND RODS (CONT'D)																
S.21	25	17.5			27.5		18.3	2	25	11.1	28.5	.932	.0163	12.2		
S.28	100	68+														+Tempering at 200°/250°C. required to obtain this value.
S.61	35	20	21	22	29		24.8									
S.62	46	30	32	35	29		31.5									
S.65	65	54	54.5	55	29		39.7								81	
S.69	55	43	43.5	44	28.5		35.5	2	25	21.4	57.3	2.455	.0535	12	67	
S.76	40	25	25	25.5	29		27.9									
S.80	55	40	42	43.5	28		36.5								66	
S.81	65	54	54.5	55	29		39.7	2	25	31.5	60.7	1.80	.0362	11.5	79	
S.82	85	50	57.5	65.5	25.5		52.0									See A.D.M.552
S.90	65	39														
DTD.126	40	31	34	37	28		26.0	2	25	17.8	35.7	.732	.0123	12.5		
	30	18.5	18.5	19	30											Softened.
DTD.153	55	44	49	53	27		35.3									
DTD.161	30	14	14.5	15.5	26		23.0									
DTD.176	35	15	16	18	28		27.0									

AP 970 Design Requirements for Aeroplanes AL25-37 19460801 OCR.pdf
Page 203

TABLE I - STEELS (CONT'D)

Specn.	Tension f_t	Tension p_1	Tension p_2	Tension p_5	Tension E	Comp f_c	Shear f_{so}	Torsion Range d/t From	Torsion Range d/t To	Torsion q_1	Torsion f_q a	Torsion f_q b	Torsion f_q c	Torsion G	Bearing b_{10}	Remarks
BARS, FORGINGS AND RODS (CONT'D)																
DTD.188	55	43	43	43.5	31										68	
DTD.189	30	10.5	11	12	28		24.4									
DTD.331	80	70	74.5	79.5	29		49.5								115	
DTD.461	55	43	44	45	28.5											
DTD.470	55	43														
DTD.473	75	65	69	74	29											
DTD.480	55	43	44	45	29		35									
DTD.490	55	43	44	45	29		35									
DTD.500	80	70	74.5	79.5	29											
DTD.519	65	39														
DTD.525	45	28														
DTD.600	55	43	44	45	28.5											

AP 970 Design Requirements for Aeroplanes AL25-37 19460801-OCR.pdf

TABLE 2 - LIGHT ALLOYS

Specn.	Tension					Comp	Shear	Torsion							Bearing	Remarks
	f_t	p_1	p_2	p_5	E	f_c	f_{so}	Range d/t From	Range d/t To	q_1	fq a	fq b	fq c	G	b_{10}	
SHEET AND STRIP																
L.3	25	15+	15.5	16	10.5											+14.5 for transverse loading.
L.4	9	7.5	8	8.5	10											
L.16	7	5.8	6.2	6.5	9											
L.17	5															
L.38	24	13.5														
L.46	11	5.5	5.5	6	9.5										7.4	
L.47	25	19	19.5	20	10										33	
DTD.118	11	3.5	4.5	6.5	6.0											
DTD.182	20	7	7.5	8	10											
DTD.213	11															
DTD.390	25	15	15.5	16	10										25	
DTD.546	27	21	21.5	22	10										35	
DTD.603	26	16	16.5	17	10.5										29.5	
DTD.610	25	15	15.5	16	10										27	
DTD.646	28	23	23.5	24.5	10.5										38.5	

AP 970 Design Requirements for Aeroplanes AL25-37 19460801 OCR.pdf

TABLE 2 - LIGHT ALLOYS (CONT'D)

Specn.	Tension f_t	p_1	p_2	p_5	E	Comp f_c	Shear f_{so}	Torsion Range d/t From	To	q_1	fq a	b	c	G	Bearing b_{10}	Remarks.
TUBES																
T.4	26	18	19	20.5	10.5			12	30	9.2	32	1.38	.0224	3.9	30	Heat treated and drawn.
	25	15	16	17	10.5			30	67	9.2	12.1	.046	0	3.9		Subsequently heat-treated.
T.9	8															3" o/d and smaller.
DTD.186	26	18	19	20	10			10	60	7.3	19.1	.351	.0031	3.9		12G and thinner.
	25	17	18	19	10			12	60	7.3	19.1	.351	.0031	3.9		Thicker than 12G.
DTD.190	20	8	8.5	9.5	11			12	40	3.9	21.8	.821	.0103	3.9		
								40	60	3.9	7.0	.037	0	3.9		
DTD.273	29	22	23	24	10.5			7	45	11.8	25.1	.558	.0051	3.9	34	
DTD.310	9	4	4.5	5.0	10											3/16" and $\frac{1}{4}$" o/d.
	10	4.5	5.0	5.5	10											5/16" and $\frac{3}{8}$" o/d.
	11	5.0	5.5	6.0	10											Over $\frac{3}{8}$" o/d.
DTD.440	15	11	11.5	12	10			7	50	5.8	9.9	.073	0	3.9	16	
DTD.450	17	10	10.5	11	10			7	55	5.9	12.7	.189	.0015	4.0	15.5	
DTD.460	22	18	18.5	19	10			5	50	10.7	15.8	.124	0	4.0	27	
DTD.464	28	23	24	25	10.5			5	45	13.3	19.7	.183	0	4.1	34	
DTD.520	27	22	23	24	10.5			5	50	11.0	20.2	.364	.0032	4.0	35	

Chapter 401
Amended by A.L.No. 34

TABLE 2 - LIGHT ALLOYS (CONT'D)

Specn.	Tension					Comp	Shear	Torsion							Bearing	Remarks
	f_t	p_1	p_2	p_5	E	f_c	f_{so}	Range d/t From	Range d/t To	q_1	fq a	fq b	fq c	G	b_{10}	
BARS, FORGINGS AND RODS																
L.1B	25	15	15.5	16	10.5		15.4	2	25	6.5	18.5	.490	.0075	4.1	28	Extrusions thicker than $\frac{3}{8}$" and forgings $\not>$ 3" dia. Extrusions $\not>$ $\frac{3}{8}$" in thickness.
	24	14	14.5	15	10.5											
L.37	25	14	15	16	10.5		16.2									
L.39	22	12	12.5	13	10.5		11.2	2	25	4.7	15.7	.340	0	4.0	16.5	Bars for machining $>$ 3" and $\leqslant$ 6" dia.
	20	10.5	11	11.5	10.5										15.5	Bars for machining $>$ 6" and $\leqslant$ 8" dia.
L.40	27	21	21	21.5	10.5		15.1	2	25	10.4	22.4	.710	.0142	4.0	30	Bars and extrusions $>$ $\frac{3}{8}$" ($\not>$ 3" dia.) Extrusions $\leqslant$ $\frac{3}{8}$" $\not>$ 3" diameter.
L.44	26 11	20 6.5	6.5	7	10		7.6	2	25	4.8	12.5	.469	.0091	3.9		
L.45	25	19	19.5	20	10.5		13.9	2	25	8.7	19.2	.626	.0119	3.9	27	Bars for machining $>$ 3" and $\leqslant$ 6" dia.
	23	17														Bars for machining $>$ 6" and $\leqslant$ 8" dia.
DTD.88	15	8	8.5	9	6.4		6.6	2	25	1.4	8.5	.270	.0050	2.3		

AP 970 Design Requirements for Aeroplanes AL25-37 19460801 OCR.pdf

TABLE 2 - LIGHT ALLOYS (CONT'D)

Specn.	Tension					Comp	Shear	Torsion							Bearing	REMARKS
	f_t	p_1	p_2	p_5	E	f_c	f_{so}	Range d/t From	Range d/t To	q_1	f_q a	f_q b	f_q c	G	b_{10}	
BARS, FORGINGS AND RODS (CONT'D)																
DTD.130	27	21														Bars and extrusions $\geq \frac{3}{8}$" and forgings $\leq$ 3" diameter. Extrusions $\leq \frac{3}{8}$" dia.
	26	20														
DTD.259	17	11														
	14	9														$\leq$ 2" diameter.
DTD.297	20	8	8.5	9.	10		12.3	2	25	4.8	19.8	.513	.0044	3.9		$>$ 2" diameter.
DTD.303	16															
DTD.322	18	10					8.8	2	25	1.8	10.1	.322	.0058	2.4		
DTD.327	17															
DTD.363A	35	30	30	30	10.5											$\leq \frac{3}{8}$" diameter.
	38	33	33	33	10.5		19.5	2	25	12.7	28.5	1.015	.0191			$> \frac{3}{8}$" diameter.
DTD.364A	28	24	24.5	24.5	10.5											Extrusions $\leq \frac{3}{8}$" dia.
	30	26	26.5	26.5	10.5		17.3	2	25	10.8	22.1	.373	0		32.5	Bars and extrusions $\frac{3}{8}$" to 1" diameter.
	32	28	28.5	28.5	10.5		18.4	2	25	11.6	23.5	.397	0		35	Extrusions $>$ 1" dia.
DTD.410	25	19	20.7	22	10			2	25	10.3	19.6	.320	0	4.0	32	Bars for machining $>$ 3" and $\leq$ 6" dia.
DTD.423	22	17	17	17.5	10.5		11.6	2	25	7.2	15.7	.392	.0065	3.9	19	Extrusions $> \frac{3}{8}$" ($\leq$ 3" dia.)
DTD.443	17	10	10	10.5	10.5		8.9	2	25	4.1	12.2	.248	0	3.8	16	

Chapter 401
Amended by A.L.No. 34

TABLE 3 - BRASSES, BRONZES ETC.

Specn.	Tension f_t	p_1	p_2	p_5		Comp f_c	Shear f_{so}	Torsion Range d/t From	Torsion Range d/t To	q_1	f_q a	f_q b	f_q c	G	Bearing b_{10}	Remarks
TUBES																
DTD.268	35															
DTD.318	24															
DTD.323	27	13.5	13.5	13.5	18			10	65	7.0	18.5	.416	.0032	6.2		
BSS.885	25															
BSS.886	18															
BARS, FORGINGS AND RODS																
BSS.218	20															Bars, sections and forgings.
BSS.249	25	14+														+ for rods $\geq \frac{1}{2}$" dia. and flats, squares and hexagons of same cross-sectional area.
BSS.250	30	15														Grade A (up to 4" dia.)
	35	18														Grade B (up to $1\frac{1}{2}$" dia.)
BSS.251	26															Bars and sections $\leq \frac{3}{4}$".
	22															Bars and sections $> \frac{3}{4}$" $\geq$ 5" dia.
	22															Forgings.
BSS.369	30	23														$\leq$ 2" dia.
	25	20														$>$ 2" dia. $\leq 3\frac{1}{2}$" dia.
	20	15														$> 3\frac{1}{2}$" dia. $\leq 4\frac{1}{2}$" dia.
	17.5	5														$> 4\frac{1}{2}$" dia. $\leq 5\frac{1}{2}$" dia.
DTD.197	45	25														

AP 970 Design Requirements for Aeroplanes AL25-37 19460801 OCR.pdf

TABLE 4 - TIMBER

Spec'n.	Title	Tens'n.	Comp.	Mod. of Rupture	Shear	E	Remarks
V.3≠	Plywood for Class I parts	10,000					Direction parallel to grain of face veneers.
		6,500					Direction normal to grain of face veneers.
		20,000					Sum of tensile strength in both directions.
V.4	Ash	12,700	5,800	10,500		1.5	
V.5	Walnut (for use in airscrews)		7,000	11,500		1.5	
V.7	Mahogany (for use in airscrews)		6,250	10,000		1.5	
DTD.36	Silver spruce or approved substitutes						
	Grade A	10,000	5,000		900	1.5	Crushing across grain 600; 500 and 300 respectively.
	Grade B	8,000	4,000		800	1.2	
	Grade C∅	4,000	2,000		400	1.0	

∅ May only be used for parts whose failure would not lead to collapse of the structure or loss of control in flight.
Figures quoted refer to timber whose density is not le[illegible] than that specified for Grade B material.

K.

AP 970 Design Requirements for Aeroplanes AL25-37 19460801 OCR.pdf

TABLE 6 - WIRES

Spec'n.	Title	Size	Strength (ult) (lbs.)	Remarks
W.1	High Tensile Steel Wire	8	3,603	Size is standard wire gauge (s.w.g.)
		9	2,919	
		10	2,450	
		11	2,131	
		12	1,713	
		13	1,339	
		14	1,070	
		15	866	
		16	721	
		17	552	
		18	405	
		19	282	
		20	229	
		21	179	
		22	137	
		23	102	
		24	84	
W.3 W.8	Streamlined Wires) Tie Rods (Swaged))	4 B.A.	1,050	
		2 B.A.	1,900	
		1/4"	3,450	
		5/16"	5,700	
		3/8"	8,500	
		7/16"	11,800	
		1/2"	15,500	
		9/16"	19,300	
		5/8"	23,630	
		11/16"	29,610	
		3/4"	34,520	
		7/8"	48,190	
		1"	63,850	
		1 1/8"	81,270	
		1 1/4"	103,500	

AP 970 Design Requirements for Aeroplanes A.25-37 19460801 CGR.pdf

TABLE 7 - STRENGTH PER FACE IN LB OF PINS IN DOUBLE SHEAR IN HARD PLATES FOR MATERIAL HAVING f_{so} = 10 tons/sq.in.

Dia. of pin(d) in.	Area of pin in^2 (A)	Thickness of central plate - t													Dia. of pin(d) in.
		24G	22G	20G	18G	16G	14G	-	12G	10G	-	8G	-	-	
		0.022	0.028	0.036	0.048	0.064	0.080	0.100	0.104	0.128	0.150	0.160	0.200	0.250	
3/32	0.0069	103	120	130	140	145	150	150	150	150	150	154	154	154	3/32
1/8	0.0123			210	240	255	260	265	265	270	270	270	270	270	1/8
4 B.A	0.0158			250	285	320	330	340	340	345	345	345	350	350	4 B.A.
5/32	0.0192				345	380	400	410	410	410	420	420	420	420	5/32
2 B.A	0.0269				430	510	540	560	560	580	580	590	590	590	2 B.A
3/16	0.0276				440	520	550	570	580	590	600	600	600	610	3/16
1/4	0.0491					790	900	970	980	1020	1050	1050	1070	1080	1/4
5/16	0.0767						1240	1410	1430	1520	1580	1600	1640	1670	5/16
3/8	0.1104							1830	1880	2080	2190	2220	2310	2370	3/8
7/16	0.1502								2270	2640	2840	2900	3070	3170	7/16
1/2	0.1964									3160	3500	3600	3890	4050	1/2
5/8	0.3068										4650	4900	5600	6000	5/8
3/4	0.4418												7300	8200	3/4
7/8	0.6013													10400	7/8
1	0.7854													12400	1

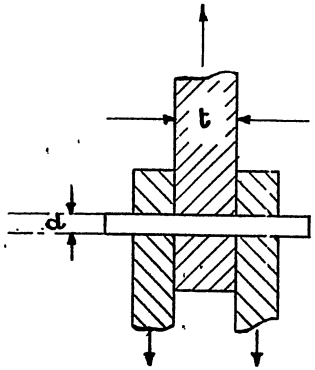

Diagram representing test conditions

AP 970 Design Requirements for Aeroplanes AL25-37 19460801.OCR.pdf

AP 970 Design Requirements for Aeroplanes AL25-37 19460801 OCR.pdf

TABLE 8

FAILING LOADS AND BEARING LOADS FOR RIVETED JOINTS COMPRISING

A.S.156 (L.37 snaphead) RIVETS IN D.T.D.390 SHEET

Rivet dia. (ins.)	Contingency	Loads (lb. per rivet) S.W.G. of Sheet											Rivet dia. (ins.)
		24	22	20	18	16	14	12	10	8	6	4	
3/32	Failure of joint	240	260	260	260	260	260	260	-	-	-	-	3/32
	2.0% bearing	185	235	-	-	-	-	-	-	-	-	-	
1/8	Failure of joint	275	360	430	450	450	450	450	-	-	-	-	1/8
	2.0% bearing	245	310	400	-	-	-	-	-	-	-	-	
5/32	Failure of joint	-	440	585	710	730	730	730	-	-	-	-	5/32
	2.0% bearing	-	390	500	670	-	-	-	-	-	-	-	
3/16	Failure of joint	-	485	655	945	990	990	990	-	-	-	-	3/16
	2.0% bearing	-	470	600	800	1070	-	-	-	-	-	-	
7/32	Failure of joint	-	-	710	1010	1360	1380	1380	-	-	-	-	7/32
	2.0% bearing	-	-	700	935	1250	-	-	-	-	-	-	
1/4	Failure of joint	-	-	775	1120	1720	1730	1730	-	-	-	-	1/4
	2.0% bearing	-	-	800	1070	1425	1780	-	-	-	-	-	
5/16	Failure of joint	-	-	-	-	-	2750	2750	2750	2750	2750	2750	5/16
	2.0% bearing	-	-	-	-	-	2230	-	-	-	-	-	
3/8	Failure of joint	-	-	-	-	-	-	3900	3900	3900	3900	3900	3/8
	2.0% bearing	-	-	-	-	-	-	3470	-	-	-	-	

NOTE:- Bearing loads given include a factor of 4/3 for direct comparison with failing loads.
0.1% bearing values have been withdrawn by A.L.No.34. It is not proposed to issue further figures to replace these.

TABLE 9

FAILING LOADS AND BEARING LOADS FOR RIVETED JOINTS COMPRISING A.S.157 (D.T.D.303 snaphead) RIVETS IN D.T.D.390 SHEET

Rivet dia. (ins.)	Contingency	Loads (lb. per rivet) S.W.G. of Sheet							Rivet dia. (ins.)
		24	22	20	18	16	14	12	
3/32	Failure of joint	185	205	205	205	205	205	205	3/32
	2.0% bearing	185	-	-	-	-	-	-	
1/8	Failure of joint	250	310	340	360	360	360	360	1/8
	2.0% bearing	245	310	-	-	-	-	-	
5/32	Failure of joint	-	425	500	520	520	520	520	5/32
	2.0% bearing	-	390	500	-	-	-	-	
3/16	Failure of joint	-	460	610	745	785	785	785	3/16
	2.0% bearing	-	470	600	800	-	-	-	
7/32	Failure of joint	-	-	740	935	1025	1045	1045	7/32
	2.0% bearing	-	-	700	935	-	-	-	
1/4	Failure of joint	-	-	685	1010	1400	1430	1430	1/4
	2.0% bearing	-	-	-	1070	1425	-	-	

NOTE:- Bearing loads given include a factor of 4/3 for direct comparison with failing loads. 0.1% bearing values have been withdrawn by A.L.No.34. It is not proposed to issue further figures to replace these.

AP 970 Design Requirements for Aeroplanes AL25-37 19460801 OCR'ed

TABLE 10

FAILING LOADS FOR RIVETED JOINTS COMPRISING

A.S.164 (L.37 120° countersunk-head) RIVETS IN D.T.D.390 SHEET

Rivet dia. (ins.)	Contingency	Loads (lb. per rivet) S.W.G. of Sheet 22	20	18	16	14	12	10	Rivet dia. (ins.)
3/32	Failure of joint	200	215	240	250	260	260	260	3/32
1/8	Failure of joint	305	375	415	450	450	450	450	1/8
5/32	Failure of joint	-	-	600	620	645	680	710	5/32
3/16	Failure of joint	-	-	685	765	850	970	990	3/16
7/32	Failure of joint	No figures yet available							7/32
1/4	Failure of joint	-	-	-	-	1620	1730	1730	1/4

NOTE:- 0.1% and 2.0% bearing values have been withdrawn by A.L.No.34. New values for the 2.0% will be introduced at a later stage.

TABLE 11

FAILING LOADS FOR RIVETED JOINTS COMPRISING

A.S.165 (D.T.D.303, 120°countersunk-head) RIVETS IN D.T.D.390 SHEET

Rivet dia. (ins.)	Contingency	Loads (lb. per rivet) S.W.G. of Sheet							Rivet dia. (ins.)
		22	20	18	16	14	12	10	
3/32	Failure of joint	155	170	195	205	205	205	205	3/32
1/8	Failure of joint	205	240	280	325	350	350	350	1/8
5/32	Failure of joint	-	-	410	485	510	520	520	5/32
3/16	Failure of joint	-	-	595	650	685	745	785	3/16
7/32	Failure of joint	-	-	-	730	825	935	990	7/32
1/4	Failure of joint	-	-	-	-	935	1120	1260	1/4

NOTE:- 0.1% and 2.0% bearing values have been withdrawn by A.L.No.34. New values for the 2.0% will be introduced at a later stage.

AP 970 Design Requirements for Aeroplanes AL25-37 19460801 OCR.pdf

TABLE 12

FAILING LOADS AND BEARING LOADS FOR RIVETED JOINTS COMPRISING

A.S.2227 (D.T.D.327 snaphead) RIVETS IN D.T.D.390 SHEET

Rivet dia. (ins.)	Loads (lb. per rivet)									Rivet dia. (ins.)
	Contingency	S.W.G. of Sheet								
		24	22	20	18	16	14	12	10	
3/32	Failure of joint 2.0% bearing	235 185	245 235	265 -	265 -	265 -	265 -	265 -	265 -	3/32
1/8	Failure of joint 2.0% bearing	295 245	380 310	405 400	425 -	425 -	425 -	425 -	425 -	1/8
5/32	Failure of joint 2.0% bearing	340 305	495 390	585 500	605 670	610 -	620 -	620 -	620 -	5/32
3/16	Failure of joint 2.0% bearing	- -	495 470	810 600	880 800	880 -	880 -	880 -	880 -	3/16
7/32	Failure of joint 2.0% bearing	- -	- -	810 700	970 940	1050 -	1110 -	1110 -	1110 -	7/32
1/4	Failure of joint 2.0% bearing	- -	- -	810 800	1270 1070	1490 1425	1570 -	1570 -	1570 -	1/4

NOTE:- Bearing loads given include a factor of 4/3 for direct comparison with failing loads.
0.1% bearing values have been withdrawn by A.L.No.34. It is not proposed to issue further figures to replace these.

AP 970-Design Requirements for Aeroplanes AL25-37-19460801 OCR.pdf

TABLE 20

LUG STRESSES

Specn.	MAXIMUM ACCEPTABLE STRESS							Remarks
	Tensile			Shear		Bearing		
	f_t	Ultimate condition	Proof condition 1.0% stress	Ultimate condition	Proof condition 1.0% stress	Ultimate condition	Proof condition 1.0% stress	
Steel Sheet and Strip								
DTD.124	45	40.5	36	21.3	17.3	not critical	59.8	Hardened and tempered.
DTD.138	70	63.0	58.5	29.8	27.8	not critical	87.7	Hardened and tempered.
Light Alloy Sheet and Strip								
DTD.390	25	21.2	15.5	11.8	7.0	not critical	22.4	
DTD.546	27	23.4	19.4	12.5	8.7		29.7	
DTD.610	25	20.9	14.1	12.0	6.8		21.8	

RELEVANT M.A.P. PUBLICATIONS

Aircraft Design Memoranda

No.585 - Analysis and testing of light alloy castings
No.602 - Testing procedure applicable to aircraft steels

Standardisation Design Memoranda

No.34 - Walkway materials
No.48 - Tubular (solid drawn) rivets and their identification
No.49 - Solid aircraft rivets and their identification
No.66 - Split tubular rivets and their identification

Airworthiness Technical Notes

No.154 - Spring design
No.158 - Compressive proof stresses of magnesium alloys

R.A.E. Reports

No. M.T.5587, No. M.T.11926 - Determination of minimum values of strength and stiffness of various metals which only just comply with the requirements of their respective specifications
No. M.T.10693 - Bearing tests of pins in tubes

Scientific and Technical Memoranda

No. 3/43 - Double shear tests on pins
No.10/43 - Wöhler rotary fatigue tests on various sand cast magnesium alloys and a sand cast aluminium alloy to Spec.No.D.T.D.133B. Before and after soaking at 140°C for 1,000 hours
No.12/43 - Timber for aeroplane construction - Strength properties of Sitka Spruce
No.13/43 - Substitute timbers for Sitka Spruce for aeroplane construction - Strength properties of Western Hemlock
No.14/43 - Report on tests carried out to determine the influence on the bending properties of wood laminae and plywood of soaking in a solution containing tanning agents
No.15/43 - Bonding of Sitka Spruce scarf joints for use in laminated bends
No.16/43 - Influence of production methods on the final shape and strength of laminated bends
No.20/43 - Limiting radii of curvature of Sitka Spruce, Western Hemlock and Douglas Fir sliced laminae
No.21/43 - Single shear tests on riveted joints F.R.L.2
No.22/43 - Single shear tests on Dural (L.37) snaphead rivets F.R.L.3
No.23/43 - Single shear tests on M.G.5 (D.T.D.303) snaphead rivets F.R.L.4
No.24/43 - Tests to determine the influence of hair checks on the strength of laminated Sitka Spruce nose rib bends
No. 1/44 - Torsional strength of tube and bar materials F.R.L.5
No. 2/44 - Single shear tests on M.G.5(D.T.D.303) 120° countersunk rivets F.R.L.6
No. 3/44 - Single shear tests on Dural (L.37) 120° countersunk rivets R.F.L.7

RELEVANT M.A.P. PUBLICATIONS (CONT'D)

Scientific and Technical Memoranda

No. 4/44 - Bearing tests on tube, bar and sheet materials F.R.L.8
No. 5/44 - Strength tests on light alloy castings F.R.L.9
No. 7/44 - Timber for aeroplane construction - Strength properties of Douglas Fir F.P.14
No.12/44 - The effect of temperature on the strength properties of wood, plywood and glued joints
No.14/44 - Mechanical properties of some high strength aluminium alloys
No.20/44 - Forming and fabrication of wrought magnesium alloys
No.C1/44 - Fatigue tests on riveted joints in 22JJ aluminium alloy sheets to B.S.S.5 L.3
No.C9/44 - Fatigue tests on joints made in D.T.D.390 using "Redux" Cement
No.C10/44 - The effect of aluminium cladding on the fatigue strength of riveted joints

OTHER PUBLICATIONS

A.R.C. Reports

No.R.&.M.1749 - The strength of lugs
No.R.&.M.1926 - Second report on the strength of lugs

CHAPTER 402

COMPONENTS

Amended by A.L.No.30

CONTENTS

	Para
Windscreens and bomb-aimers windows	1
Bracing wires -	
General	10
Main plane lift and anti-lift wires	14
Tail unit with external bracing wires	17
Fuselage bulkhead bracing wires	18
Struts -	
General	19
External bracing struts	21
Spars	22
Ribs	23
Fabric covered components	27
Ancillary equipment	33
Break-out panels	34
Seats and harness	36
Control cables	42
Control chains -	44
Guards for chains	48
Pilots hoods -	49
Mechanical tests	50
Model test	53

CHAPTER 402

COMPONENTS

Windscreens and bomb-aimer's windows

(Paras.1 to 9 inclusive have been included in Chapter 725)

Bracing wires

10. General.- To reduce the probability of breakage of streamline wires or tie rods, wires having a length/diameter ratio greater than 400 shall not be used. ("Length"is defined as the 'A' length in B.S.Specifications, irrespective of the intermediate support, such as by means of acorns, and "diameter" is the diameter of the rod used for making the streamline wire and is referred to in B.S.Specification W.3 as "size of wire" or "size"). See also Chapter 403.

11. Centre anchorage should be provided wherever possible and should be such as to prevent both torsional and flexural movement.

12. Structural arrangements in which normal deformations may impose bending loads near the ends of a streamline wire or tie rod shall be avoided. For example, ample clearance should be provided if the wire passes through a hole in a bulkhead near the end of the wire.

13. The design of the end fitting should be such that it will not give a fixation greater than that of the standard fork end.

14. Main plane lift and anti-lift wires.- All wires shall be directly duplicated, i.e. two wires of equal size shall pass between the same two points on the structure. The size of each wire shall be such that, when one wire has been removed the remaining wire has at least 75 per cent of the specified factor for any load which it may be required to withstand.

15. The anchorage of a pair of wires shall have at least the full specified factor when the load is distributed equally between the two wires and at least 75 per cent of the specified factor when either one of the wires is removed and the whole of the resulting load is taken on the other.

16. The vertical component of the strength of anti-lift wires and anchorages shall be not less than half the vertical component of the strength of the corresponding lift wires and anchorages, irrespective of the loads in the anti-lift wires.

17. Tail unit with external bracing wires.- The tail plane and fin structures shall have at least half the specified factors for all relevant loads when any one external bracing wire is removed. Duplicate wires shall be stressed in accordance with the requirements for main plane lift and anti-lift wires.

B

Bracing wires (cont'd)

18. Fuselage bulkhead bracing wires.- Fuselage bulkhead bracing shall have at least half the specified factor for the relevant load when one adjacent side panel wire, if any, is removed. The relevant load will be that which gives the greatest bulkhead load under these conditions. Duplicate wires shall be stressed in accordance with the requirements for main plane lift and anti-lift wires.

Struts

19. General.- When light alloy tubing is used in compression in the primary structure or control system, the departure from straightness shall not exceed 1/600th of the length of the tube.

20. For these members the drawing schedule shall call for material to Class A straightness. Where the tube specification does not classify straightness the limit of departure should be given as L/600 in the schedule.

21. External bracing struts.- The aerodynamic loading on external bracing struts shall be considered. Such struts shall comply with all strength requirements when carrying the most adverse probable combination of end load and aerodynamic lateral loading.

Spars

22. When the construction of main planes and tail planes is such that the failure of a single rib, by accidental damage or otherwise, increases the length of the spar without lateral support, then such main planes and tail planes shall comply with all specified strength requirements, with at least full factor, when the spars are entirely unsupported laterally over a length of two rib spacings. The unsupported length of the spar shall be taken in its most adverse position.

Ribs

23. The strength of main plane ribs shall be demonstrated by a mechanical test reproducing with reasonable accuracy the load distribution along the chord corresponding to the various flight conditions considered. If the spars to which the rib is attached are particularly flexible in the plane containing the spar minor axis, the rib test should be arranged to give an end load and/or torque along the inter-spar length of the rib representing the stabilising force exerted by the rib on the spar.

24. A mechanical test for tail plane ribs will only be necessary when these ribs differ considerably from types whose strength characteristics are known.

25. These mechanical tests shall conform to the conditions stated in the Introduction. Correction down to the standard component conditions will seldom be possible so that the 20 per cent extra factor expedient will usually have to be adopted.

(Para.26 has been deleted)

Fabric covered components

27. With any form of fabric covered main plane or tail plane the leading edge shall be covered with metal or other suitable material.

28. The strength of the fabric and its attachment to the structure shall at least be such that the factors specified for all flight conditions will be obtained. Particular attention should be paid to the rib spacing and to the attachment of the fabric in regions where high suctions may occur. The air loads should be estimated from the best available data.

29. Particular attention should also be given to the attachment of fabric in the slip-stream.

30. In general, compliance with these requirements will be obtained by adherance to S.I.S. 1 and 2 for aeroplanes for which the design diving speed does not exceed 250 m.p.h. E.A.S. and to S.I.S.10 for those of higher speed. Alternative methods of attachment may be accepted subject to satisfactory tests.

Ballast weights (see Chapter 309)

(Paras.31 and 32 have been deleted)

Ancillary equipment

33. The ultimate factor for platforms or similar parts included in the aeroplane structure for use in ground servicing only, and for any item of ancillary equipment supplied by the contractor for lifting or supporting an engine, freight, personnel, etc., shall be not less than 4.0. If the item is so constructed that its strength cannot be accurately calculated from existing data it shall be subjected to a proof load equal to twice the maximum static load which it will be required to withstand. The inscription "Safe for loads up to (here insert the maximum static load figure)" shall be painted or otherwise marked on each item at a clearly visible spot.

Break-out panels

34. The aerodynamic forces tending to open break-out panels may be very large under certain conditions of flight, particularly when the aeroplane is diving. A conservative

C

estimate of the aerodynamic force necessary to open the panel should be made from the best available data (see also Chapter 720). It should be checked that the method of fixing the panel gives ample security against this force so that the panel does not come adrift in flight.

35. Reference should be made to Chapter 714 for precaution against ice accretion.

Seats and harness

36. Seats and harness and their attachments shall have the same standard of strength as is specified for the aeroplane as a whole. They shall also meet the crash landing requirements of Chapter 309. In all cases the assumed weight of the man shall be in accordance with the upper limit given by Appendix 8, and full allowance shall be made for any items of equipment carried on the seat or by the occupant.

(Paras.37 to 41 have been deleted)

Control cables

42. Swaged end fittings may be used on control cables provided that it is possible to assemble or replace the cable without removing or dismantling pulleys, guides, or fair leads.

43. The layout of a control system should not involve the splicing of cables in position. The standard approved method of splicing cables is as shown in S.I.S.No.3. Alternative methods of splicing may be approved provided that the alternative type of splice is shown to be of equal strength. All flying control cables should be proof loaded, after all splicing operations have been completed, to 50 per cent of the nominal strength of the cable. Save in exceptional circumstances, this operation should be done before the assembling of the cable in the control system. Where a splice in situ cannot be avoided, the proof load test should still be applied if practicable.

Chain assemblies

44. All chain assemblies shall comply with S.D.M.21, and the appropriate chain assembly number from the S.D.M. shall be quoted in the aeroplane drawings. With the exception mentioned in para.45, all control chain assemblies shall have an ultimate factor of 3 on the greatest (unfactored) load in lb. as determined from Chapter 207. All chain assemblies shall be tested in accordance with Specification No.D.T.D.1090.

45. Chains will be accepted as complying with the automatic pilot requirements and tail to wind requirements

Chain assemblies (cont'd)

provided that their minimum breaking strength is such as to give the ultimate factor specified for each of those cases.

46. Spring links and half links are acceptable only for Class 2 and Class 3 applications; they are not acceptable for Class 1 application.

47. Non-magnetic chains.- As far as possible steel chains shall be situated sufficiently remote from the compass to avoid magnetic interference, but when this cannot be avoided, the chain shall be manufactured from steel to Specification No.D.T.D.166, and the drawings shall be endorsed to the effect that the chain shall be supplied in the fully de-magnetised position.

48. Guards for chains.- When chains and sprockets are used the chain shall be guided on to the sprocket and guarded so that it is impossible for it to jam or override its sprocket.

Pilots hoods

49. Prototype installations or new designs of pilots hoods which are of jettisonable type to meet the requirements of Chapter 100, shall be subjected to mechanical and model tunnel tests.

50. Mechanical tests.- Ground tests shall be carried out to check in detail the operation of the release gear under hood loads approximating to those which will be experienced in flight. For the purpose of the tests it will be sufficient to apply a few concentrated loads to represent the magnitude and distribution of the loads estimated for flight at the lowest speed considered most adverse to satisfactory release, and also at design diving speed, and it shall be shown that the release gear will operate satisfactorily.

51. Alternatively, the test may be carried out with the hood fitted in an inverted position on a dummy portion of fuselage and loaded with shot bags, in which case the stiffness of the dummy fuselage should approximate to that of the aeroplane fuselage, so that any distortions which will occur in practice are present in the test.

52. In cases of abnormal load distribution the loads to be applied should be discussed with the Director, R.A.E. (S.M.E. Dept).

53. Model test.- During the design stage, wind tunnel tests shall be made on the model of the hood throughout a range of incidences from that corresponding to the minimum speed which will ensure satisfactory release, to that of the design diving speed.

D

54. When the hood is released at any of these attitudes, it should fly clear of the fuselage and tail units. Its flight in relation to excrescences, (e.g. wireless masts) should be noted. If the tests show that the hood will fly clear of the aeroplane after release, then flight tests, as detailed in Chapter 1012, shall be made, but if the model tests indicate that a possibility of the hood fouling any part of the aeroplane, or any equipment necessary in a flight test exists, then flight tests on that design shall not be made and the matter should be discussed with the D.G.T.D.

RELEVANT M.O.S. PUBLICATIONS

Aircraft Design Memoranda

No. 500/14 - Standardisation of swaged end fittings

Standardisation Design Memoranda

No.21 - Chain and chain assemblies

Airworthiness Technical Notes

No. 113 - Stress concentrations at roots of wings and fuselages in bending

No. 129 - The detail design of cowling panels, access doors, etc.

No. 160 - Installation of Type "Z" pilot's safety harness

R.A.E. Reports

No. S.M.E.3193 - A method of insulating the pilot's seat from aircraft vibration

R.A.E. Technical Notes

No. Aero 1715 - The estimation of the aerodynamic loads on external stores

CHAPTER 403

STANDARD PARTS

Amended by A.L.No.23

CHAPTER 403

STANDARD PARTS

General

1. This Chapter contains a few long standing requirements appertaining to the use of standard parts. Many other items of equipment have been developed as standardised parts and reference should be made to A.D.M.500 for details of these.

Streamline wires and tie rods

2. Only the following sizes of streamline wires and tie rods to B.S. Specifications W.3. and W.8. shall be used:-

4 B.A., 2 B.A., 8/32, 10/32, 12/32, ... even sizes expressed as thirty-seconds of an inch.

Locknuts

3. For stainless steel streamline wires and tie rods, stainless steel standard thin lock-nuts to B.S. Specification A.1. shall be used.

Turnbuckles

4. Except where a long range of adjustment is required the A.G.S. type turnbuckle built up from a right and left handed tension rod and two standard fork ends to B.S. Specification S.P.3. each with lock-nuts of appropriate type shall be used.

5. When the longer range of adjustment given by the barrel type turnbuckle to B.S.Spec.S.P.46, is essential, this type may be used. The following sizes only shall be employed,-

5 cwt	-	Size No.5
10 cwt (long)	-	Size No.10
15/20 cwt (long)	-	Size No.20L
25/35 cwt (long)	-	Size No.35L

B.A.Screws

6. Only even sizes of B.A. screws, as listed in the relevant A.G.S. sheets shall be employed.

RELEVANT M.O.S. PUBLICATIONS

Aircraft Design Memoranda

No. 469 - Substitute for stainless steel bolts and fittings
No. 488 - Avoidance of use of long bolts and alternative methods of manufacture
No. 500 - Standardisation of aircraft equipment
No. 527 - B.A. roundhead bolts
No. 548 - Positive locking for A.G.S. and similar pipe couplings

Standardisation Design Memoranda

No. 36 - Stiffnuts
No. 48 - Tubular (solid drawn) rivets and their identification
No. 49 - Solid aircraft rivets and their identification

CHAPTER 404

FITTINGS

CHAPTER 404

FITTINGS

1. Parallel pins

1.1 Solid parallel rivets which are unsupported for the major portion of their length, such as through thin tubes, shall not be used where it is possible to use taper pins in reamed holes. Where solid parallel pins are essential, then the length/diameter of the unsupported portion should not exceed 4.0. This restriction is necessary because the strength of the joints depends upon the pin fitting tightly in the hole and it is not always possible to ensure by inspection that the riveting of parallel pins has produced the desired result.

2. Cowling fasteners

2.1 Cowling fasteners shall give clear indication whether they are in the locked or free position. As far as possible all fasteners should be arranged to lock with the slot in the direction of flight.

3. Lugs for wires and tie rods

3.1 To reduce the risk of fatigue failures of external bracing wires or attachments which are under tension during the greater proportion of the time in flight, the thickness of the wiring lug shall be such that there is a clearance between the lug and the jaws of the fork end fitting, and the hole in the lug shall provide a loose fit for the pin. Generally the requisite slight freedom of the lug in the fork will be obtained if the clearance in the jaws is not less than 2 per cent of the width between them and that for the pin in the hole is not less than 2 per cent of the pin diameter.

3.2 For external bracing wires which are slack during the greater proportion of the time in flight, serious elongation of the hole in the wiring lug may occur if too much clearance is provided for the pin. The hole, therefore, shall be no larger than that required for assembling, and excessive vibration of these wires shall be prevented by the use of spreaders or by other suitable means.

4. Leather

4.1 When leather is used for aeroplane fittings where flexibility and durability of the leather is of importance the drawings should quote one of the following "Government Dept. Specifications for General Stores",-

Spec'n No.	Title
T.G.3A	Hides and leather (other than chrome leather).
T.G.4A	Upholstery hides, binding, buttons and studs.

5. Grain in fittings

5.1 It is shown by the Izod test that materials are weakest when the grain is parallel to the direction of the blow. Care should be taken in the design of parts which have to withstand shock loading to ensure that the best disposition of the grain is obtained. This is of special importance with machined parts where generally the best disposition of grain is obtained by forging or stamping. Where these methods are not practicable the design should be such that the best disposition of grain to resist shock is obtained.

5.2 The above applies particularly to B.S.Specification No.S.80+, which shall not be used for machine fittings unless the grain is suitably disposed. The drawings of parts made of B.S. Specification No.S.80 shall show the direction of the grain.

+ Attention is drawn to note contained in B.S.Specification for aircraft steels on the use of heat-treated bars of diameters larger than $2\frac{1}{2}$ ins.

AP 970 Design Requirements for Aeroplanes AL25 37 19460801 OCR.pdf

RELEVANT M.A.P. PUBLICATIONS

Aircraft Design Memoranda

No.500/14 - Standardisation of swaged end fittings

Standardisation Design Memoranda

No.34 - Walkway materials
No.36 - Stiffnuts
No.58 - Combined screws and washers

CHAPTER 405

PROCESSES AND WORKING OF MATERIALS

A

CHAPTER 405

PROCESSES AND WORKING OF MATERIALS

1. Gluing

1.1 General

1.1.1 The requirements of para.1 refer to all glued joints in Class 1 or Class 2 parts (see Appendix 1). They are not, however, applicable to propellers, joints of surfaces of impregnated wood or metal, or to the internal gluing of plywood. Reference should be made to Chapter 804 for repair of glued joints.

1.2 Approved cement

1.2.1 Joints shall be made with synthetic resin cement to Specification No.D.T.D.484 and this specification number shall be quoted on all relevant drawings.

1.3 Use of screws

1.3.1 In joints liable to fail through the buckling or warping of plywood, it is desirable to reinforce the glue with wood screws. Screws shall not be used, however, in members whose smallest width of cross section is less than $\frac{1}{2}$". For members whose smallest width of cross section is about $\frac{1}{2}$", wood screws larger than size No.2 should not be used.

1.4 Allowance for shrinkage

1.4.1 The following precautions shall be observed to minimise the risk of joint failure due to changes in moisture content producing differential movement of wooden components.

(i) When plywood is glued to large members made of natural or laminated timber of greater depth than $\frac{1}{2}$", the edges of the plywood shall be at least $\frac{1}{8}$" short of the edge of the timber.

(ii) Plywood angles shall be used instead of solid angle corner blocks.

2. + Welding

2.1 The following materials may be welded without subsequent heat treatment.-

Sheets and strips ----- S.3, S.84, D.T.D.124.
Tubes ---------- T.26, T.35, T.45, D.T.D.41, D.T.D.178, D.T.D.305, D.T.D.347, D.T.D.359, D.T.D.408.

+ Following J.A.C.Paper No.225 existing requirements on welding have been withdrawn. The policy on welding is under review and new requirements will be issued later.

Welding (cont'd)

Bars ---------- S.21, D.T.D.126.
Non-corrodible steels --- D.T.D.171, 176, 207, 316.

2.2 Material to Specification No.D.T.D.166 may be welded but the strength of the welded material should be assumed to be no greater than that of material to Specification No.D.T.D.171. The application of this ruling will depend upon the position and extent of the welding. Doubtful cases should be referred to the R.A.E.

2.3 If the designer wishes the materials quoted in paras.2.1 and 2.2 to be heat-treated after welding, he should state this, together with details of the heat treatment, on the drawings.

2.4 The approval of the D.G.T.D. shall be obtained before aeroplane parts made from materials other than those specified in paras.2.1, 2.2 and 2.5 are welded.

2.5 Welding material

2.5.1 Heat resisting steels to Specifications No.D.T.D.491 and 493 shall be welded with wire to Specification No.D.T.D.489. The non-corrodible steels given in para.2.1 shall be welded either with wire to Specification No.D.T.D.549, or with wire of approximately the same composition as that of the steel being welded, provided that the wire complies with the pickling and bend test specified in Specification No.D.T.D.549. All other steels given in para.2.1 shall be welded with iron or mild steel wire to Specification No.D.T.D.82, or with a rod or strip of approximately the same composition as the steel being welded.

3. Bending

3.1 Tubes

3.1.1 It should be noted that metal is superior to resin for filling tubes owing to the difficulty of thoroughly removing resin. Cases have occurred of choked filters through resin left in pipes. The use of fillings with a low temperature melting point is recommended, and only sufficient heat should be applied just to cause the material to run. Suitable alloys are those which melt at temperatures below 100°C so that loading and unloading can be carried out by the aid of boiling water. When using such an alloy the inside of the tube should be lightly oiled to minimise the risk of the alloy sticking to the walls and so rendering complete removal problematical. After oiling the tube, it is convenient to close one end of it,

B

pre-heat the tube in boiling water, run in the molten alloy and then quench the whole in cold water. After bending, the tube is unloaded by re-immersion in boiling water and allowing the molten alloy to run out. Whilst the use of a naked flame for the purpose of unloading filled pipes is not prohibited, great care should be exercised to ensure that excessive local heating does not occur during the operation.

3.1.2 The use of a fusible alloy is not acceptable as a filler in the case of high tensile steel tubes to Specifications No.T.2, D.T.D.119, 211 or 254. In the case of stainless steel tubes defects may be developed during the working of the pipe due to indiscriminate heating during filling and unloading. This induces lack of uniformity in the material, and tubing which has been heated during filling and unloading should be finally tempered at a uniform temperature of 550°C.

3.1.3 In the case of aluminium alloy tubes, the material of which may be susceptible to accelerated age-hardening, the following precautions shall be taken.-

(i) the loading and bending operations shall be performed as soon as possible after normalising,

(ii) when pre-heating the tubes previous to loading them with fusible alloy, they should only be immersed in boiling water for such time as is necessary for them to attain the temperature of the water. The bending operation should take place immediately after cooling the filled tubes, and

(iii) under no circumstances shall the temperature exceed 100°C either during the pre-heating or post-heating process.

3.1.4 After unloading, the tubes shall be cleaned internally to ensure the complete removal of any loosely adhering alloy. This may be done with a suitable brush of the "pull-through" or rotary type, or alternatively, by blowing through with steam, which must not be super-heated. This cleaning process shall not be omitted as residual alloy in aluminium or aluminium alloy tubes will cause early corrosion and in steel tubes, which are subsequently heat-treated, will attack the steel and cause intergranular cracking.

3.2 Bent tubes for use as structural members

3.2.1 Bent tubes for use as structural members shall be subjected to a proof load test. The proof load shall produce 75% of the maximum design stress in the curved portion of the tube and the drawing shall specify this test and give particulars of the loading to be applied.

3.2.2 It is not intended that the above test requirements be applied to tubes which have a relatively large radius of curvature, such as rib booms and fuselage longerons of conventional design. Where any doubt exists, however, as to the effect of the bending operation on the strength of the tube these tests shall be applied.

3.3 Aluminium alloy sheets and strips

3.3.1 When bending or forming sheets or strips of material to Specifications No.B.S. L.3 and L.38 or D.T.D.390, the radii specified in Table I are the minima that can be accepted for the manufacture of aeroplane parts and fittings. The radii specified apply to the tools over which the light alloy sheets and strips are bent and not to the dimensions of the finished plating.

+ 3.4 Aluminium alloy extrusions

3.4.1 Bending and forming of materials to Specifications No.B.S. L.40; D.T.D.363, 364, and 683 shall preferably be carried out in the annealed condition. Should this prove impracticable, the bending and forming shall be carried out in the solution heat treated condition, and then as soon as possible after solution heat treatment.

3.4.2 If it is impracticable to bend the material within 12 hours of the solution heat treatment, the designer shall consult the materials manufacturer and the Inspector-in-Charge, A.I.D., before authorising bending and forming.

3.4.3 If bending and forming is not severe, manipulation in the final heat treated condition may be acceptable, subject to the approval of the material manufacturer, the Inspector-in-Charge, A.I.D., and the R.T.O.

+ From A.D.M.617

3.4.4 During bending and forming the material shall be properly supported and the bending radius shall be made as large as possible. The operation shall be performed in a smooth and controlled manner so that the required contour may be achieved without subsequent resetting.

3.4.5 If final ageing of the material is likely to be delayed for some days, adequate temporary corrosive preventive shall be applied immediately after bending and forming.

3.5 Sharp-cornered sections

3.5.1 Sharp-cornered sections produced from hot-formed sections or forgings are unsuitable for aeroplane structural parts which have to carry any appreciable bending or torsional stress. All such parts should have fillets, the inner radius of which, in general, should not be less than one-fifth of the thickness of the flange or web (whichever is the thicker) at the corner. This requirement applies whether the section is extruded, rolled, drawn or machined.

4. Flattening

4.1 Ends of tubes

4.1.1 For flattening ends of tubes for the purpose of attachment, a liner tube shall be inserted having a serrated inner end and a length of three diameters of the containing tube. The gauge of the liner shall be less than that of the original tube. The complete flattened end should be made solid by approved methods (brazing, sweating, etc.,).

5. Spinning

5.1 Season cracking due to exposure in corrosive conditions is liable to cause early failure of spinnings made of material to the following Specifications.-

B.S. Specs.	D.T.D. Specs.	
265	232	267
266	237	283
886	253	307
	263	312

5.2 Stresses left in the material after spinning are responsible for this dangerous condition and in order to relieve the stresses all spinnings shall be finally heated for 30 minutes at a temperature of 300°C.

5.3 Drawings of parts which can be produced by spinning as an alternative to pressing shall bear a note to the effect that if the part is produced by spinning the heat treatment of para.5.2 shall be applied after spinning.

6. Sweating or soldering

6.1 The sweating or soldering of high tensile steel tubes to Specification T.2, D.T.D.199, 211 or 254 is not acceptable since in the condition of high tensile stress they are susceptible to failure by inter-crystalline penetration of molten solder or other fusible alloy.

7. Finishing

7.1 High tensile steel parts

7.1.1 The edges of all holes should be given a small radius, and buffing all over is recommended as a final finish.

8. Strength after processing

8.1 Production drawings

8.1.1 Where the processes adopted for manufacture may affect the strength of a part which has been approved by strength test, sufficient information shall be given on the detailed production drawing to ensure that the part is fabricated by the processes or sequence of processes necessary to provide strength equal to that of the prototype part.

9. De-magnetising

9.1 When de-magnetisation of a part is necessary to comply with the requirements of Chapter 717 it shall be carried out to the satisfaction of the D.G.A.I. All drawings of such parts shall be marked as follows,-

"De-magnetise. Compass test at "x" inches"

where "x" equals the distance from the compass the part will be when assembled in the aeroplane.

10. Magnetic flaw detection

10.1 The designer shall consider the need for a magnetic flaw detection test on each steel Class 1 or Class 2 part (see Appendix 1). When, from the designer's knowledge of the importance of the part, and the likelihood of defects occurring, or in order to comply with the requirements of para.10.2 such test has

D

to be made, the drawing shall be endorsed accordingly. The minimum percentage of tests on parts produced to a given drawing shall be decided between the designer and the Inspector-in-Charge, A.I.D.

10.2 Tests shall be made on all parts covered by the following.-

(i) All high tensile steel tubes to Specification Nos.T.2, D.T.D.199, and 254 used as structural members which are swaged, tapered or bent. The drawings shall state that the tests are to be made when the tubes are in their final form and after any pickling or plating process required has been completed.

(ii) All electric arc welds in primary structures, except that welds made from the following steels may be exempted at the designer's discretion,-

B.S.Specifications. S.3, S.84, S.21 and T.26
DTD.Specifications. 41, 171, 176, 207 and 316

10.3 The technique to be employed shall be to the satisfaction of the D.G.A.I. The drawings shall be referenced to give a clear indication of this technique.

11. Forgings

11.1 The drawings of forgings which are Class 1 parts (see Appendix I) shall be annotated "Class 1". On the drawings of such parts the direction of grain required shall be indicated clearly in a manner which will ensure that it is brought to the notice of the person responsible for deciding the forging technique to be adopted.

TABLE I

Bending of Aluminium Alloy Sheets and Strips

Condition	Minimum radius			
	Angle of bend. 18 s.w.g. and thinner		Angle of bend. Thicker than 18 s.w.g.	
	Through 120° or less	Over 120°	Through 120° or less	Over 120°
Fully annealed	0.5T	1T	0.5T	1T
Finally heat treated and within one hour of quenching	0.5T	1.5T	1.5T	2T
Finally heat treated and aged.	2T	3T	2.5T	3T

In the above table T = thickness of sheet or strip.

(Note.- The minimum radii specified above apply to the tools over which the light alloy strips or sheets are bent, and not to the dimensions of the finished plating.)

AP 970 Design Requirements for Aeroplanes AL25-37 19460801 OCR.pdf

RELEVANT M.A.P. PUBLICATIONS

Aircraft Design Memoranda

No. 488 - Avoidance of use of long bolts and alternative method of manufacture
No. 521 - Steel tubes - condition of material supplied, limits on outside diameter, method of flattening and relaxations in testing
No. 543 - Spot welding of aluminium alloys
No. 569 - Steel tubes for welded primary structures
No. 596 - Non-corrosive flux for soft soldering (D.T.D.599)

Airworthiness Technical Notes

No. 106 - Use of sawn surfaces for glued joints
No. 123 - Design stresses for glued joints
No. 138 - Prevention of deterioration of wooden components

R.A.E. Reports

No. Mat./N/1/2001 - Adhesion of glues to plywood. Part I
No. Mat./N/2/2001 - Adhesion of glues to plywood. Part II
No. Mat./N/3/2001 - Defective glued joints
No. Mat./N/5/2051 - The immediate effects of water on glued joints

Scientific and Technical Memoranda

No. 7/43 - Manufacture and glueing of Zebwood
No.11/43 - The effects induced by cold setting urea/formaldehyde (U/F) glues on the physical properties of the wood in wood/glue composites
No.19/43 - Synthetic resin glues
No. 8/44 - Isolation effects in aircraft wings and the psychrometric durability of glues
No.12/44 - The effect of temperature on the strength properties of wood, plywood and glued joints
No.19/44 - Cyclical redrying tests on cold-setting synthetic resin adhesives F.P.17
No.C2/44 - American methods of safety glass manufacture
No. 3/45 - Causes leading to internal failure of glue layers in laminated Sitka Spruce bends set by the electrically heated strip method

CHAPTER 406

CASTINGS

Amended by A.L.No.28

CHAPTER 406

CASTINGS

Introduction

1. Castings may be used subject to compliance with the requirements of this Chapter.

Classification

2. Castings used in aeroplanes shall be classed in one of three categories; Class 1, Class 2, or Class 3, in accordance with the "Classification of aeroplane parts" given in Appendix 1. Cast wheels for beaching chassis shall be considered as Class 1.

Radiological examination

3. General.- Castings which are required to undergo radiological examination detailed below shall conform to the requirements of paras.9 to 11 inclusive. In addition, if required by the A.I.D. Inspector, occasional break-up tests shall be made to check the uniformity of the castings and/or the radiological technique.

4. Class 1.- All Class 1 castings from each source of supply shall be subjected to the radiological examination approved for that part or the alternative permitted by para.8 until the suitability of the foundry methods, patterns and alloys have been proved. Thereafter the A.I.D. Inspector may accept radiological examination on only a percentage of the castings, to be fixed at his discretion. Such relaxation will be made if the Inspector (after consulting the appropriate design authority), is satisfied that the nature and reserve strength of the castings are such that visual inspection would detect any flaw, serious enough to produce appreciable risk of failure in service.

5. Class 2.- The first castings of a given Class 2 part from each source of supply shall be subjected to the radiological examination or to the alternative referred to in para.8 to prove the suitability of the foundry methods, patterns, and alloy.

6. If this radiological examination shows all the castings to be satisfactory, therefore only such percentage (including zero per cent) of the castings as may be decided by the A.I.D. Inspector need be radiologically examined. The balance shall be subjected to individual visual examination for general conditions as laid down in the appropriate Inspection Instruction.

7. Class 3.- Class 3 castings need not be subjected to radiological inspection but individual visual examination shall be carried out.

Alternative to radiological examination

8. When the casting is such that complete radiological examination presents great difficulty, and subject to prior agreement by the D.G.A.I., the break up procedure may be adopted as an alternative to the radiological examination required for Class 1 and Class 2 castings.

Drawings

9. The drawing of each Class 1 and Class 2 casting shall be sent to the M.A.P.(C.R.I.) as early as possible and shall be marked to indicate the areas of highest stress.

10. C.R.I. will assess its radiological category and, where necessary, will allot a technique number. He will return the drawing to the A.I.D. Inspector-in-Charge at the design firm with the classification, and where necessary, technique number, within four days of its receipt at M.A.P.

11. The A.I.D. Inspector-in-Charge will pass this information to the firm's works planning and/or sub-contract order office, who will see that the classification and the technique number, if any, is put on all orders for castings of the detail part.

Strength - light alloy

12. When designing a casting to just meet requirements it is important to consult the founders about the strength of the material which can reasonably be expected in different parts of the casting as this will in general be less than that quoted for the test bar.

13. Small Class 1 castings.- For light alloy castings under 25 lb. in weight and for wheels of conventional design the designer is free to choose any one of the acceptance procedures detailed in paras.14 to 16 inclusive, but the method of para.16 should be used whenever possible in order to take advantage of the lower factor and the resulting reduction in weight. The tests shall be carried out on the finished (i.e. fully machined) castings.

14. Strength tests may be waived if a casting can be proved satisfactory by comparison with tests of a similar casting, or if it can be shown by calculation that the ultimate factor is not less than 2.2 times the ultimate factor for the aeroplane as a whole, assuming the tensile strength of the material to be that specified as a minimum for the test bar. A casting accepted on this basis is referred to as being Class 1A.

AP 970 Design Requirements for Aeroplanes AL25-37-1946080 QCR.pdf

Strength - light alloy (cont'd)

15. One casting chosen by the A.I.D. Inspector from the first 20 castings[ø] otherwise passed by him, shall be shown by test to have an ultimate factor of not less than 2.0 times the ultimate factor specified for the aeroplane as a whole. A casting accepted on this basis is referred to as of Class 1B.

16. Each of three castings, chosen as in para.15 shall be shown by test to have proof[+] and ultimate factors not less than 0.8 and 1.5 respectively times the ultimate factor specified for the aeroplane as a whole. A casting accepted on this basis is referred to as Class 1C.

17. The method of loading in any tests shall be that estimated to test in a representative manner the most highly stressed region of the casting. In the event of the required factor not being obtained the A.I.D. Inspector may require further tests.

18. When strength tests on a casting appear to present special difficulties reference should be made to S.M.E. Dept., R.A.E.

19. When there is a change in the source of supply, foundry methods, pattern or alloy, the A.I.D. Inspector may at his discretion ask for a repetition of the strength tests previously made.

20. Large class 1 castings.- For light alloy castings over 25 lbs. in weight or of unusual design, a procedure will be specified by S.M.E. Department, R.A.E. for each design of casting. It will normally be necessary to arrange for special examination of, say, the first 20 castings by radiographs and otherwise, and to select for strength tests three or more specimens, including those judged to be the best and the worst castings proposed for approval. The aim of this procedure is to determine the full range and strength variation to be expected from approved castings.

21. In all cases the proof and ultimate factors shall be determined by tests, and usually these will be required to be not less than 0.8 and 1.5 times the ultimate factor specified for the aeroplane as a whole.

22. In some cases special strength tests will be called for on specimens cut from the broken castings (i.e., after test as in paragraph 21).

ø If, owing to limited production in early stages, 20 castings are not available as a batch, one may be selected for test from some small batch at the A.I.D. Inspector's discretion. A re-test on one from a batch of 20 shall then be made as soon as possible.

+ For the purpose of these tests the proof load of a casting shall be taken as the maximum load which can be carried without producing serious deformation or permanent set, having regard to the duties of the casting.

23. A casting accepted under the above procedure will be known as Class 1D.

Strength - iron and steel

24. Static castings.- For strength requirements on castings made by a static process reference should be made to S.M.E.Dept., R.A.E.

25. Centrispun castings.- The proof and ultimate factors for Centrispun steel castings shall be those specified for the aeroplane as a whole.

Strength - brass and bronze

26. For strength requirements on castings made of materials other than those previously specified reference should be made to S.M.E.Dept., R.A.E.

PART 5
AERO-ELASTICITY

(8123) T14097/2692 500 1/44 M46506 C&P 752

PART 5

Aero-Elasticity

CONTENTS

Chapter 500	General aero-elasticity requirements
Chapter 501	Prevention of wing flutter
Chapter 502	Prevention of tail flutter
Chapter 503	Wing stiffness
Chapter 504	Tail unit and fuselage stiffness
Chapter 505	Control circuit stiffness

A

CHAPTER 500

GENERAL AERO-ELASTICITY REQUIREMENTS

Note.- This chapter has been revised to include the requirements of ADM.No.594, and to include the proposals of J.A.C. Paper No.265.

A

CHAPTER 500

GENERAL AERO-ELASTICITY REQUIREMENTS

Introduction

1. The requirements of this Part aim to restrict structural distortion in flight within limits that will not seriously impair control and stability, and to prevent flutter and allied vibrations. In general the methods specified are mass-balancing or irreversible controls, together with compliance with the relevant stiffness criteria or detailed flutter calculations. Alternative methods may be adopted, but only after approval by The Director, R.A.E.

2. The requirements of the following paragraphs are applicable to all the chapters of this Part.

Compressibility effects

3. Except where otherwise specified the requirements apply to all aeroplanes, and to all flight conditions, for which the Mach number does not exceed 0.8; for aeroplanes designed to higher Mach numbers, further stiffness requirements may be necessary. Reference should be made in such cases to The Director, R.A.E.

Methods of determination of stiffness properties

4. The calculations necessary to determine compliance with the stiffness criteria of the following chapters should usually be based on stiffness tests, conducted on the lines described in R.A.E. Report SME.3311. Calculations of stiffness will only be accepted when the component is a very simple one, or when test results on an almost identical structure are available.

5. The stiffness of fabric covered components shall be determined with the fabric removed.

Control surface c.g. positions

6.

+ (i) Two extreme positions of the centre of gravity of a control surface are used in flutter calculations. These are the most rearward and the most forward positions practicable due to variations in fabric and doping weights, trimming strips or cord, paint, fittings etc., and are referred to as the "c.g. back" and "c.g. forward" positions respectively. The limitations placed on these extremes are given in terms of a distance measured in the plane of the undisplaced control surface and perpendicular to the hinge line.

(ii) In general, from a flutter viewpoint, no limitation need be placed on the "c.g. forward" position of a

+ From J.A.C.Paper No.265

Control surface c.g. positions (cont'd)

control surface. However, if the c.g. is too far forward, undesirable effects on stability may result, or gusts may produce unwanted control surface movement. Accordingly, it is desirable that the "c.g. forward" position of the control surface shall not be a greater distance forward of the hinge line than $0.05c_a$. Where c_a = mean chord of the control surface aft of the hinge line.

(iii) If the mass balance weights are not in the plane of the control surface, the possibility of flutter involving chordwise movement of the main surface shall be investigated and guarded against.

7. Painting and doping of control surfaces.- Fabric control surfaces should be doped, not painted, but metal or wooden control surfaces may be painted. In particular, service identification marks shall not be painted on any control surface.

8. The weight of dope used on fabric covered control surfaces is variable and it is important that the maximum probable weight of the covering should be allowed for in design. A weight of at least 10 oz/sq.yd. for fabric plus dope (i.e. 20 oz/sq.yd. of control surface area) shall be assumed.

9. For control surfaces other than fabric covered, a liberal estimate of the amount of paint used for finishing should be made.

Provision for repairs to mass balanced components

10. All mass balance weights shall be made adjustable either in weight or position, to allow for c.g. compensation corresponding to any repair permitted by the relevant Air Publication for the type (see Chapter 804).

Attachment of mass balance weights

11. The stiffness and strength of the attachments of mass balance weights shall be adequate to prevent them becoming loose or developing fatigue cracks under vibration.

12. The strength and stiffness of the structure to which the mass balance weights are attached shall be adequate for the maximum weight required after repair. The design should be such as to prevent more weight being fitted than the strength and stiffness of the structure is capable of withstanding.

13. The strength of the attachment fittings will usually be acceptable if they have a reserve factor of at least 1.0 under the ultimate loads incurred when the mass

AP 970 Design Requirements for Aeroplanes AL25-37 19460801 OCR.pdf

balance weights and fittings are subjected to inertia forces corresponding to the following conditions.-

(i) With the control surface in its neutral position; a normal acceleration of $1.5n_1 g$ in either direction.

(ii) With the control surface in its neutral position; a lateral acceleration of 5g.

(iii) An angular acceleration of the control surface about its hinge line of 500 radians/second^2.

14. For each of the above cases, the parts stressed should include the balance arm and the local control surface structure to which the mass balance weight is fixed.

Control surface tabs

15. Irreversible control.- The trimming tab controls shall be irreversible, and the irreversible unit(s) in the control circuit shall be as close to the tabs as is practicable.

16. Backlash.- To minimise the danger of any high frequency oscillations of the tab causing a fracture which might leave the tab free to move through large angles,-

(i) the tab gear shall be designed to minimise wear and damage which might lead to backlash, and

(ii) the hinges and the control circuit (with particular reference to that part of the circuit between the irreversible unit(s) and the tabs) shall be robust and free from backlash.

17. Stiffness.- The tabs and local structure shall be stiff in torsion and flexure. An adequate number of hinges shall be provided to prevent any material bending of the tab between the hinges under air loads.

18. Mass balance.- When the centre of gravity of a tab in the neutral position is on, or slightly forward of, the hinge, the tab is considered to be mass balanced.

19. The following shall be mass balanced.-

(i) Tabs (including those incorporating spring devices whether pre-loaded or not) and auxiliary surfaces which can be moved independently of the control surface by the application of an external force.

(ii) Tabs of all kinds fitted to aeroplanes for which the design diving speed is greater than 350 knots E.A.S.

20. Consideration should also be given to the mass balancing of tabs on aeroplanes of lower diving speeds in addition to the other flutter preventive measures given above, when any doubt is felt as to the adequacy with which these other methods have been met.

+ 21. The contractor shall discuss with The Director, R.A.E. in the early stages of design the fitting of mass balancing systems (or other flutter preventives) covered by the following headings,-

(i) remote or geared mass-balancing systems (i.e. all systems involving masses not directly attached to the surface concerned) and balance masses on arms having appreciable flexibility,

(ii) spring tab systems,

(iii) geared or trimming tab systems where any doubt is entertained as to the rigidity of, or backlash in, the operating mechanism,

(iv) round-nosed control surfaces,

(v) mass balance for components which may suffer from compressibility effects, and

(vi) any system (e.g. involving damping or irreversible controls) alternative to mass-balance. Such a system will be considered if exceptional difficulty is experienced in meeting the requirements of paras. 19(ii) and 20, or if the performance would be seriously affected by the additional drag involved.

22. Spring tabs.- In addition to the above requirements, consideration should be given to the recommendations of Airworthiness Technical Note No.149.

Tests

23. One prototype aeroplane of any new type shall be subjected to full resonance tests before any flight tests of the type are made.

+ From A.D.M.594

C

CHAPTER 501

PREVENTION OF WING FLUTTER

Note.- This chapter has been amended following J.A.C.Paper No.265.

A

CHAPTER 501

PREVENTION OF WING FLUTTER

Introduction

1. The aim of the requirements of this chapter is to ensure that the lowest probable wing flutter speed will not be lower than the design diving speed. Reference should also be made to the general requirements of Chapter 500 and to the stiffness requirements of Chapter 503.

Mass-balancing of ailerons

2. All ailerons shall be mass-balanced. If a bob-weight is employed to effect this, it should be placed well outboard of any point of external support to the mainplane.

3. The aileron of a given wing shall be regarded as mass-balanced when the product of inertia Σ mxy of the aileron, in its c.g. back condition, is zero or negative both when the aileron is neutral, and when it is displaced $\pm 10^{\circ}$, where -

m ... lb. ... an element of aileron mass,
x ... ft. ... the perpendicular distance, measured in the plane of the wing, of mass m from the hinge line (positive when m is behind the hinge axis).
and y ... ft. ... the perpendicular distance of mass m from a longitudinal axis in the plane of the wing parallel to, and usually+ coincident with, the chord at the wing root (positive when m is outboard of the longitudinal axis),

For ailerons with little or no forward aerodynamic balance, at least 10% mass overbalance is required, i.e. the net balance for Σ mxy for the complete aileron and balance masses shall be negative, and shall not be numerically less than 0.1 of the value of Σ mxy for the part of the aileron aft of the hinge line. Ailerons with approximately semi-circular noses are included in those having no forward aerodynamic balance, provided the hinge line is on or near a vertical plane through the axis of curvature of the nose.

4. For biplanes, the weight of any inter-aileron member should, for the purpose of calculating Σ mxy, be halved and the halves treated as two isolated masses fixed to the upper and lower ailerons respectively at the points of attachment of the inter-aileron member.

+ When the inboard portion of the wing can be shown to be abnormally stiff, either inherently or by virtue of exceptionally stiff external supports, it may be acceptable to locate the longitudinal axis elsewhere than at the wing root.

Disposition of non-structural loads

5. The disposition of non-structural loads such as fuel, fuel tanks, guns, bombs, ammunition, etc., which are housed inside monoplane wings should conform to the following principles,-

(i) Each non-structural load should be placed so that its c.g. is as far forward as practicable, and, if possible, ahead of the flexural axis.

(ii) Where (i) is inadequately met, the non-structural loads should be as close to the root of the wing as possible.

(iii) When other conditions permit, the order and manner of filling and emptying the fuel tanks in wings should be so arranged that in any possible flight condition the centre of gravity of the fuel and tank loads at every section is as far forward as practicable.

6. Special attention should be given to the application of the above principles in the case of wings of light structural weight (i.e. wings of low density) since the flutter speed of such a wing is particularly sensitive to the addition of non-structural loads.

Prevention of flap oscillations

7. Precautions are to be taken in the design of flaps and their controls to prevent any danger of oscillations occurring with the flap in any position. Prevention of oscillation may be obtained by the following means,-

(i) operation through irreversible units placed as close as possible to the flap,

(ii) designing the flap control circuit, particularly between the flaps and their respective irreversible units or other locking devices to eliminate backlash, and

(iii) making each flap torsionally stiff with hinges adequate in size to prevent the development of backlash and sufficient in number to prevent undue flexural deformation of the flap.

R

CHAPTER 502

PREVENTION OF TAIL FLUTTER

Note.- The subject matter of this chapter has been amended following J.A.C. Paper No.265.

A

CHAPTER 502

PREVENTION OF TAIL FLUTTER

Introduction

1. This chapter gives particular requirements for the prevention of rudder and elevator flutter. Reference should also be made to Chapter 500 for general requirements on flutter prevention and to the tail unit stiffness requirements of Chapter 504.

Rudder

2. All rudders shall be mass-balanced. A rudder shall be regarded as mass-balanced when the product of inertia Σmxz of each complete rudder in its c.g. back condition is zero or negative, both when the rudder is neutral and when it is displaced $\pm 10^{\circ}$, where -

m ... lb ... an element of rudder mass,
x ... ft ... perpendicular distance of mass m from the rudder hinge axis (positive when m is aft of the hinge axis),
and z ... ft ... perpendicular distance of mass m from a horizontal plane containing the fuselage axis of torsion. (Positive in the case of conventional type of rudder when m is above the fuselage axis of torsion.)

For rudders having little or no forward aerodynamic balance,+ the additional condition shall be satisfied that the c.g. of each complete rudder shall always be on, or forward of, the hinge line.

3. A conventional type of rudder is defined as one, the greater part of which is above the fuselage axis of torsion. Other types of rudder will be dealt with individually and particulars of such rudders for which approval is desired should be forwarded to The Director, R.A.E.

4. On all aeroplanes having outboard rudders and on all aeroplanes whose design diving speed exceeds 260 knots the centre of gravity of each complete rudder in its c.g. back condition, both when the rudder is neutral and when it is displaced $\pm 10^{\circ}$, shall not be aft of the hinge line by more than $0.05c_r$. (See Chapter 504, para.9).

Elevator

5. On aeroplanes for which the design diving speed is greater than 220 knots the centre of gravity of the finished elevators shall, in the most adverse position, be within $0.05c_e$ of the hinge line,

---

+ For the purpose of these requirements, the definition "aerodynamic balance" is to be taken as including "horn balance".

where c_e ... ft. ... the mean chord of the elevator behind the hinge line.

For elevators having little or no forward aerodynamic balance, the c.g. shall always be on, or forward of, the hinge line.

6. Ideally every chordwise position of the elevator should have a centre of gravity position within these limits, corresponding to an approximately uniform spanwise distribution of mass balance weights, but it appears sufficient in practice to place the balance weight partly near the elevator tips and partly near the fuselage centre line.

7. The lowest flutter speed likely to occur on an aeroplane is usually that associated with differential movement of the elevators together with torsional vibrations of the fuselage. Hence all sections of the elevator shall be rigidly connected together, preferably by means of a direct torque tube. In the case of elevators with dihedral the sections should be connected by means of a robust universal joint, in which any tendency to the development of back-lash is reduced to a minimum.

8. Where the two halves of an elevator are not directly connected together, each half shall be separately mass balanced against fuselage torsion (i.e. Σmxy for each half shall be zero or negative, where -

m ... lb ... an element of elevator mass,
x ... ft ... the perpendicular distance of mass m from the elevator hinge axis (positive when aft of the hinge axis),
and y ... ft ... the perpendicular distance of mass m from a vertical plane through the fuselage axis of torsion, considered to be positive for each half).

AP 970 Design Requirements for Aeroplanes AL25-37 19460801 OCR.pdf

CHAPTER 503

WING STIFFNESS

Note.- The subject matter of this chapter has been revised with A.L.No.30 following J.A.C.Paper No.215.

A

Amended by A.L.No.30

CHAPTER 503

WING STIFFNESS

Basic requirement

1. The lateral stability of the aeroplane shall not be dangerously sensitive to the effects of possible structural distortions, and there shall be no likelihood of aero-elastic vibration at any speed up to the design diving speed.

2. Detailed calculations proving compliance with this requirement shall be submitted to The Director, R.A.E. (S.M.E.Dept) or alternatively compliance with the following stiffness requirements will be accepted. In either case the requirement of para.3 shall be met.

Prevention of reversal of aileron control

3. The torsional stiffness of the wing structure shall not be less than 30% in excess of the stiffness estimated to give reversal of the aileron control at the design diving speed. The effects of air compressibility shall be appropriately allowed for in these calculations and reference should be made to ~~R.A.E.~~ Airworthiness Technical Note No.114.

Torsional stiffness criteria

4. General.- In applying the requirements of para.4 to 7 inclusive the effects of air compressibility should be ignored. The monoplane torsional stiffness criteria given in paras. 6 and 7 are those now in general use and defined in R.&.M.1742, except when the mid-aileron section is at a distance from the wing root (face of fuselage) less than 0.67 or greater than 0.75 of the wing span from root to tip. In such cases the torsional stiffness appropriate to the wing section at the nearer limit (i.e. at 0.67 or 0.75 span) is used instead of the actual mid-aileron stiffness. The wing torsional stiffness criterion is:-

$$\frac{1}{V}\left(\frac{m_\theta}{dc^2}\right)^{\frac{1}{2}}$$

where

V	ft.sec.	maximum equivalent airspeed at which the aeroplane is required to be dived during contractor's trials.
m_θ	lb.ft/radian...	torsional stiffness, mid-aileron or equivalent tip whichever is appropriate, measured under symmetric torque.

Torsional stiffness criteria (cont'd)

d	ft.	distance from wing root to equivalent tip.+ This distance is always measured to the wing root even where engines are fitted in the wings.
c_g	ft.	geometric mean chord for complete wing.

5. The criteria given in paragraphs 6 and 7 are expressed in terms of the effective wing density σ (lb/ft³), which for the purpose of these requirements is defined thus;-

$$\sigma = \frac{W + Kw}{Sc_1}$$

where

S	sq.ft.	area of wing outboard of face of fuselage or, in the case of an aeroplane with wing engines, outboard of outer face of outermost engine nacelle.
W	lb.	weight of wing structure, including control surfaces and circuits, and any fabric covering in the area S
w	lb.	weight of greatest total load, other than wing structure weight (i.e. fuel etc.) which may be carried during contractors' diving trials by that portion of the wing to which the area S applies.
K		a factor normally to be taken as 0.5, but subject to variation by agreement, with The Director, R.A.E. (S.M.E.Dept.) in cases in which this is justified by the nature of the distribution of weight in the wing.
c_1	ft.	geometric mean chord of that part of wing defined by S.

+ The equivalent tip section is that wing section parallel to the centre line of the aeroplane which is distant from the centre line by 0.9 of the distance to the wing tip.

Torsional stiffness criteria (cont'd)

6. Values required for wings without wing engines.- The mid-aileron criterion shall be not less than 0.020 for wings of effective density up to 0.3 lb./cu.ft. and not less than 0.040 for wings of effective density above 0.8 lb./cu.ft. For a wing with an intermediate effective density, the criterion shall be not less than that given by linear interpolation between the above upper and lower limits. The equivalent tip criterion must be not less than 0.010. For wings with effective densities above 1.4 lb./cu.ft. reference shall be made to The Director, R.A.E. (S.M.E.Dept).

7. Values required for wings with wing engines.- The mid-aileron criterion shall be not less than 0.028 for wings of effective density between 0.2 and 0.8 lb./cu.ft. The equivalent tip criterion shall be not less than 0.010. For wings with effective densities outside the above limits reference shall be made to The Director, R.A.E. (S.M.E.Dept).

Torsional stiffness of ailerons

8. The torsional stiffness criterion is defined by

$$\frac{1}{V_D} \left(\frac{T_a}{b_a c_a^2}\right)^{\frac{1}{2}} \cdot (1-M^2)^{\frac{1}{4}}$$

where V_D ... ft./sec..... design diving speed.

T_a ... lb.ft./radian .. aileron torsional stiffness measured between sections 0.1 b_a from the inner and outer ends of the aileron.

b_a ..... ft. ..... overall span of the aileron measured parallel to the aileron hinge line.

c_a ..... ft. ..... geometric mean chord of that portion of the aileron which is aft of the hinge line.

M ..... The Mach number appropriate to the design diving speed at 10,000 ft.

9. The value of the above criterion shall not be less than the following;-

0.009 for ailerons with distributed mass-balance (see definition in para.11).

0.016 for all other ailerons.

10. For ailerons without distributed mass-balance special care should be taken to avoid material changes of aileron torsional stiffness along the aileron span.

Torsional stiffness of ailerons (cont'd)

11. Distributed mass-balance.- The strict theoretical implication of "distributed mass-balance" is that each fore and aft cross-section of the aileron is mass-balanced in that same cross-section. For the purpose of this chapter, however, an aileron will be deemed to have distributed mass-balance provided that if the aileron were divided into two parts by a cut through its mid-span at right angles to the hinge line, each half would itself be separately mass-balanced when in its correct position relative to the aeroplane. This approximate rule only applies provided that mass-balance is not effected by means of a concentrated weight at the mid-span of the complete aileron, nor by two concentrated masses each at the inner end of its respective half aileron.

C

CHAPTER 504

TAIL UNIT AND FUSELAGE STIFFNESS

Note.- The subject matter of this chapter has been completely revised with A.L.No.30 following J.A.C.Paper No.243.

A

Amended by A.L.No.30

CHAPTER 504

TAIL UNIT AND FUSELAGE STIFFNESS

Basic requirement

1. The longitudinal and directional control and stability of the aeroplane shall not be dangerously sensitive to the effects of possible structural distortions, and there shall be no likelihood of aero-elastic vibration at any speed up to the design diving speed. Detailed calculations proving compliance with this requirement shall be submitted to The Director, R.A.E. (S.M.E. Dept.), or alternatively compliance with the following stiffness requirements will be accepted.

Torsional stiffness of tailplanes

2. The tailplane torsional stiffness criterion is defined by:-

$$\frac{1}{V_D}\cdot\left(\frac{T_t}{\frac{1}{2}b_t c_t^2}\right)^{\frac{1}{2}}\cdot\left(1-M^2\right)^{\frac{1}{4}}$$

where V_D ... ft/sec. E.A.S. ..... design diving speed.

T_t ... lb.ft./radian ..... tailplane torsional stiffness measured at the section 0.8 of the semi-span outboard of the centre line.

b_t ..... ft. ..... span of tailplane.

c_t ..... ft. ..... geometric mean chord of complete tailplane and elevator (gross area).

M ..... the Mach number appropriate to the design diving speed at 10,000 ft.

3. The value of the above criterion shall not be less than the following:-

0.036 for tailplanes without outboard fins and rudders.

0.045 for tailplanes with outboard fins and rudders.

Torsional stiffness of elevators

4. The elevator torsional stiffness criterion is defined by:-

$$\frac{1}{V_D}\cdot\left(\frac{T_e}{b_e c_e^2}\right)^{\frac{1}{2}}\cdot\left(1-M^2\right)^{\frac{1}{4}}$$

where T_e ... lb.ft/radian ..... elevator torsional stiffness measured between two sections at distance $0.05b_e$ from the extreme port and starboard tips.

b_e ..... ft. ..... overall span of elevator measured parallel to hinge line, from port to starboard tips.

c_e ..... ft. ..... geometric mean chord of that portion of the elevator which is aft of the hinge line.

5. The value of the above criterion shall not be less than the following:-

0.012 for plain elevators.

0.014 for horn-balanced elevators.

Flexural stiffness of elevator overhang

6. The flexural stiffness criterion for the elevator overhang, (i.e. that part of the elevator outboard of the outermost hinge) is defined by:-

$$\frac{1}{V_D} \cdot \left(\frac{F_e}{S_e d}\right)^{\frac{1}{2}} \cdot (1 - M^2)^{\frac{1}{4}}$$

where F_e ... lb.ft/radian ..... flexural stiffness of the elevator overhang.

S_e ..... sq.ft. ..... area (including that forward of hinge line) of the elevator overhang.

d ..... ft. ..... distance from outermost hinge to tip of elevator.

7. The value of the above criterion shall not be less than 0.09.

Torsional stiffness of fins

8. Fins shall have adequate torsional stiffness, which should be estimated or measured as for a tailplane. For outboard fins the portions both above and below the tailplane should be treated as separate units. The stiffness should then be expressed in the form of a criterion defined in a similar way to the tailplane criterion, and should have the same order of magnitude.

B

Torsional stiffness of rudders

9. The rudder torsional stiffness criterion is defined by:-

$$\frac{1}{V_D} \cdot \left(\frac{T_r}{b_r c_r^2}\right)^{\frac{1}{2}} \cdot (1 - M^2)^{\frac{1}{4}}$$

where T_r ... lb.ft/radian ..... rudder torsional stiffness measured between two sections at distance 0.1 b_r from the extreme upper and lower tips.

b_r ..... ft. ..... overall height of the rudder measured parallel to the hinge line.

c_r ..... ft. ..... geometric mean chord of that portion of the rudder which is aft of the hinge line.

10. The value of the above criterion shall not be less than 0.011.

Vertical stiffness of fuselages

11. The fuselage vertical stiffness criterion is defined by:-

$$\frac{1}{V_D} \cdot \left(\frac{F_{f_1}}{S_t \ell}\right)^{\frac{1}{2}} \cdot (1 - M^2)^{\frac{1}{4}}$$

where F_{f_1} ... lb.ft/radian ... fuselage vertical stiffness between the wing root quarter chord point and the elevator hinge centre line.

S_t ..... sq.ft. ..... gross area of tailplane and elevator.

ℓ ..... ft. ..... distance between the wing root quarter chord point and the elevator hinge centre line.

12. The value of the above criterion shall not be less than 0.12. For large aeroplanes it is desirable that higher stiffness than that given by this minimum value should be provided, to prevent large visible deflections of the fuselage during flight.

Lateral stiffness of fuselages

13. The fuselage lateral stiffness criterion is defined by:-

$$\frac{1}{V_D} \cdot \left(\frac{F_{f_2}}{S_{fr} \cdot \ell} \right)^{\frac{1}{2}} \cdot (1 - M^2)^{\frac{1}{4}}$$

where F_{f_2} ... lb.ft/radian ... fuselage lateral stiffness between the wing root quarter chord point and the rudder hinge centre line.

S_{fr} ..... sq.ft. ..... gross area of fin(s) and rudder(s).

ℓ ..... ft. ..... distance between the wing root quarter chord point and the rudder hinge centre line.

14. The value of the above criterion should not be less than 0.14. For large aeroplanes it is desirable that higher stiffness than that given by this minimum value should be provided, to prevent large visible deflections of the fuselage during flight.

Torsional stiffness of fuselages

15. The fuselage torsional stiffness criterion is defined by:-

$$\frac{1}{V_D} \cdot \left(\frac{T_f}{\frac{1}{2} b_t S_t} \right)^{\frac{1}{2}} \cdot (1 - M^2)^{\frac{1}{4}}$$

where T_f ... lb.ft/radian ... torsional stiffness of the fuselage between the wing, root quarter chord and the elevator hinge centre line.

S_t ..... sq.ft. ..... gross area of tailplane and elevator.

b_t ..... ft. ..... span of tailplane and elevator.

16. The value of the above criterion shall not be less than 0.036.

AP 970 Design Requirements for Aeroplanes AL25-37 19460801 OCR.pdf

CHAPTER 505

CONTROL CIRCUIT STIFFNESS

Note.- The subject matter of this chapter was previously contained in Chapter 504.

A

CHAPTER 505

CONTROL CIRCUIT STIFFNESS

Introduction

1. The following requirements apply only to conventional types of flying control circuits. If the circuit is of unconventional type, e.g. a circuit with an irreversible unit, reference should be made to The Director, R.A.E. (S.M.E.Dept.) so that the case may be dealt with on its merits.

Percentage stretch

2. The percentage stretch of a control circuit is defined by

$$100 \times \frac{a}{A}$$

where A = the total available movement of a point on either the cockpit control or the control surface when moved from the neutral position to the stops.
a = the comparable movement of the same point when the opposite terminal(s) is held in the neutral position.

3. The percentage stretch of each control circuit shall not exceed 20% when the load at the cockpit control (when representative of the pilot's force) has the following values,-

Control circuit	Load on cockpit control
Aileron	(50 lb. for stick control (80 lb. for wheel control
Elevator	50 lb.
Rudder	100 lb.

Stiffness of aileron inter-connecting circuit

4. The stiffness of the circuit connecting the ailerons shall be such that the hinge moment required to produce deflection of the aileron about its hinge axis is not less than the following:-

(i) h lb.ft. per radian for upward movement of the aileron.

(ii) h/2 lb.ft. per radian for downward movement of the aileron.

where $h = 1000 + \frac{2}{3} n_1 w S_a c_a$

and w ... lb/sq.ft. ... gross wing loading.

S_a ... sq.ft. ... aileron area aft of the hinge line.

c_a ..... ft. .... mean chord of aileron aft of the hinge line.

5. The above criteria apply only to ailerons having values of the hinge moment coefficient between 0 and - 0.02. For ailerons which may be expected to have a value outside these limits(e.g. sharp nosed Frise type ailerons) flight tests will be necessary to ensure that no large upfloat occurs and the provision of fixed tabs on the ailerons may be necessary to counter any excessive upfloat.

B

RELEVANT M.O.S. PUBLICATIONS

Airworthiness Technical Notes

No.105 - The use of models for strength and stiffness tests
No.114 - The calculation of aileron reversal speeds
No.120 - The design of control systems for efficient operation at low temperature
No.131 - Aileron design
No.135 - Tailplane stiffness (Secret)
No.146 - Tab gear design
No.148 - Flutter derivative coefficients
No.149 - The prevention of flutter on spring tabs

R.A.E. Reports

No. S.M.E. 3191 - Some notes on methods of achieving mass balance
No. S.M.E. 3192 - The effect of compressibility on the estimation of aileron reversal speed
No. S.M.E. 3210 - Flutter of control surface tabs
No. S.M.E. 3211 - An approximation simplifying wing flutter calculations
No. S.M.E. 3216 - Estimation of wing flutter speeds from the curves of R. & M.1869
No. S.M.E. 3227 - The effects of structural flexibility of tail-plane,elevator and fuselage on longitudinal control and stability
No. S.M.E. 3249 - The prevention of flutter of spring tabs
No. S.M.E. 3251 - Standards of structural stiffness for aeroplane tailplanes, elevators and fuselages
No. S.M.E. 3279 - The calculation of aileron reversal speed
No. S.M.E. 3311 - The measurement of structural stiffness of aircraft
No. S.M.E. 3346 - Mass balance for spring tab flutter prevention
No. S.M.E. 3355 - The estimation of wing divergence speeds
No. S.M.E. 3357 - An elaboration of the criterion for wing torsional stiffness
No. S.M.E. 3362 - Resonance tests of aircraft
No. Aero 2011 - An analysis of the lift slope of aerofoils of small aspect ratio, including fins,with design charts for aerofoils and control surfaces

R.A.E. Technical Notes

No. S.M.E. 218 - Note on virtual inertia and control surface flutter

Reference Page to Part 5
Re-issued with A.L.No.37

OTHER PUBLICATIONS

A.R.C. Reports

R.& M.No.1095	-	Theoretical relations for an aerofoil with a hinged flap
R.& M.No.1155	-	The flutter of aeroplane wings
R.& M.No.1255	-	The flutter of monoplanes, biplanes and tail units
R.& M.No.1568	-	Calculation of critical reversal speeds of wings
R.& M.No.1595	-	Aileron instability with special reference to rolling aileron motion, and the influence of Frise type hinge moment curves
R.& M.No.1782	-	Calculated flexural - torsional flutter characteristics of some typical cantilever wings
R.& M.No.1869	-	The influence of wing taper on the flutter of cantilever wings
R.& M.No.2046	-	The technique of wing resonance tests

PART 6

AERODYNAMICS AND FLYING QUALITIES

(8123) T14097/2692 500 1/44 M46506 C&P 752

CHAPTER 601

FLYING QUALITIES

Note.- The subject matter of this chapter, as issued with A.L.No.37, incorporates material from J.A.C.Papers Nos.297 and 311.

A

CHAPTER 601

FLYING QUALITIES

1. General

1.1 This chapter contains the requirements for the flying qualities of an aeroplane.

1.2 The requirements are an amplification of the basic requirement that at all practical loadings and under all appropriate operating conditions the aeroplane shall satisfactorily fulfil its specified roles and shall be controllable and adequately stable about each axis.

1.3 This basic requirement is amplified in para.2 and subsequent paragraphs by details of the qualities required under particular conditions of flight. These detailed requirements shall be applicable to the aeroplane at all practical loadings.

1.4 In order that, during the operational life of the type, a movement of the centre of gravity outside its specified limits may be tolerated, the flying qualities of the aeroplane should not deteriorate rapidly when the centre of gravity is moved progressively beyond the design c.g. positions.

1.5 Flight tests to determine whether the aeroplane meets these requirements are contained in Part 9.

2. Take-off and initial climb

2.1 Elevator control

2.1.1 With the aeroplane trimmed for take-off, flaps in the take-off position, and alighting gear down, the elevator control force shall be less than 35 lb. for a stick control, or 50 lb. for a wheel control, throughout the take-off when,-

(i) on tail wheel type aeroplanes, the tail wheel is held on the ground at speeds up to 0.25 Vs_1+ and the tail is raised before a speed of 0.85 Vs_1 is reached; or

---

+ Throughout this chapter the following symbols have been used.-

Vs_1 ... knots ... stalling speed of the aeroplane with flaps and alighting gear down and engine(s) throttled.

Vs_2 ... knots ... stalling speed of the aeroplane with flaps and alighting gear up and engine(s) throttled.

Take-off and initial climb (cont'd)

(ii) on nose wheel type aeroplanes, the nose is raised before a speed of 0.85 Vs_1 is reached,

(iii) on seaplanes, a normal technique is adopted.

2.2 Rudder control

2.2.1 With the aeroplane trimmed for take-off, all engines developing full take-off power, and with the wind on the more adverse side and having a component at right angles to the take-off run equal to 0.2 Vs_1 or 10 knots, whichever is the greater, the rudder control force to maintain a straight path during the take-off shall be less than 100 lb. For float seaplanes having a design take-off weight of less than 15,000 lb. the wind component may be reduced to the greater of 0.15 Vs_1 or 7 knots. Differential throttle opening may be employed on multi-engined aeroplanes during the early part of the take-off run but all throttles shall be fully open (subject to any engine operational limitation) before attaining a speed of 50% of the take-off speed for landplanes or of 60% of the take-off speed for seaplanes.

2.3 Longitudinal stability on the water

2.3.1 It shall be possible without undue piloting skill for a seaplane to take-off without porpoising or bouncing.

2.4 Retraction of alighting gear and flaps

2.4.1 The changes of trim on retraction separately of the alighting gear and of the flaps shall be such that each can be controlled by the pilot with one hand. For alighting gear retraction it shall be such that, with the aeroplane trimmed for take-off, the elevator control force is less than 35 lb. for a stick control, or 50 lb. for a wheel control, when the retraction is commenced immediately the aeroplane becomes airborne.

3. Approach and landing

3.1 Elevator control

3.1.1 With the aeroplane trimmed for the approach,flaps and alighting gear down, and engine(s) throttled, the elevator control force shall be less than 35 lb. for a stick control,or 50 lb. for a wheel control, in order,-

(i) on tail wheel type aeroplanes, to effect a three-point landing,

B

Approach and landing (cont'd)

(ii) on nose wheel type aeroplanes, to hold the aeroplane off the ground at a speed of 1.05 Vs_1 and, with the main wheels on the ground, to hold the nose wheel off the ground at a speed of 0.85 Vs_1, or

(iii) on seaplanes, to effect a stalled landing.

3.2 Rudder control

3.2.1 With the aeroplane trimmed for the approach, and with the wind on the more adverse side and having a component at right angles to the landing path equal to 0.2 Vs_1 or 10 knots, whichever is the greater, the rudder control force to maintain a straight path during the landing shall be less than 100 lb. For float seaplanes having a design take-off weight less than 15,000 lb. the wind component may be reduced to the greater of 0.15 Vs_1 or 7 knots.

3.3 Lowering of alighting gear and flaps

3.3.1 The change of elevator control force due to the change of trim when either the alighting gear or the flaps are lowered in level flight at a speed of 1.5 Vs_1 shall be less than 35 lb. for a stick control or 50 lb. for a wheel control.

3.4 Changes of trim during baulked landing

3.4.1 The change of elevator control force due to either,-

(i) opening the engine(s) up to full take-off power and retracting the alighting gear at a speed of 1.2 Vs_1, or

(ii) raising the flaps to the maximum lift position at a speed of 1.2 Vs_1 when the engines are delivering full take-off power,

shall at no time exceed 35 lb. for a stick control, or 50 lb. for a wheel control. The corresponding changes of aileron control force shall be less than 10 lb. for a stick control or 15 lb. for a wheel control and of rudder control force shall be less than 100 lb.

3.5 Longitudinal stability on the water

3.5.1 It shall be possible to land a seaplane over a range of landing speeds from fly-on landings to stalled landings without undue bouncing or porpoising during the landing run.

4. Stalling

4.1 There shall be adequate control and stability down to the stall, and when the stall is approached from either straight or turning flight there shall be no violent wing dropping and no tendency to spin at the stall.

4.2 It shall be possible to restore unstalled flight after the stall has occurred without use of engine(s).

4.3 There should be some warning before the stall, such as buffeting or vibration, and, once the warning is given, it shall be possible to avert the stall.

5. Aerobatics

5.1 When aerobatic manoeuvres are specified, the aeroplane shall be capable of executing in a satisfactory manner the following,-

(i) normal loop,

(ii) slow roll in each direction,

(iii) a brief period of inverted flight,

(iv) half loop followed by slow roll (in each direction),

(v) half a slow roll (in each direction) and dive out,

(vi) stall turn, and

(vii) figures of eight with vertical banked turns.

6. Spinning

6.1 Ab-initio training aeroplanes

6.1.1 In both short (3-turn) and long (8-turn) spins the height loss (from the time of commencing recovery action to the regaining of full control in level flight) shall not exceed 1,000 ft. In short spins recovery shall be possible in one complete turn. During the recovery the elevator and rudder control forces shall be less than 80 lb. and 150 lb. respectively.

6.2 Intermediate training aeroplanes

6.2.1 Recovery should be possible on twin engined aeroplanes without recourse to differential use of engines. The height loss in recovery from long spins shall not exceed 2,000 ft. During the recovery the elevator and rudder control forces shall be less than 80 lb. and 150 lb. respectively. C

Spinning (cont'd)

6.3 Single seat fighters

6.3.1 It shall be possible to recover from short spins, though not necessarily by the standard method. The height loss in recovery shall not exceed 3,000 ft. when the spin is commenced at 15,000 ft. nor shall it exceed 5,000 ft. when the spin is commenced at 30,000 ft. During the recovery the elevator and rudder control forces shall be less than 80 lb. and 150 lb. respectively.

7. Asymmetric power

7.1 Control immediately following engine failure on initial climb

7.1.1 If any engine fails on the initial climb it shall be possible to regain control of the aeroplane by use of rudder and ailerons alone, without throttling back the live engine(s). Until control is regained the aeroplane shall be at a height not less than that at which the engine failure occurred. The aileron and rudder control forces when straight flight has been resumed, but before retrimming, shall be less than 30 lb. and 100 lb. respectively.

7.2 Control immediately following engine failure in level flight

7.2.1 If any engine fails in level flight under maximum continuous power it shall be possible to regain control by use of ailerons alone with feet off the rudder bar, and without throttling back the live engine(s). The rudder shall not lock over during this manoeuvre, and the aileron control force when straight flight has been resumed, but before retrimming, shall be less than 50 lb.

7.3 Control in steady flight under asymmetric power

7.3.1 Trim.- It shall be possible to trim out all control forces in straight flight with wings level (within 3°) at a speed+ of 1.3 $V_{i\ mp}$ with the live engine(s) under maximum emergency cruising power and all engines on one side throttled, only the outboard propeller being feathered.

7.3.2 Rudder control.- When trimmed as in para.7.3.1 and at a speed of 1.3 $V_{i\ mp}$ further application of rudder (over-correcting) shall require a continuously increasing force until full rudder is reached, the aeroplane being kept on a straight course by use of aileron.

+ $V_{i\ mp}$ is the speed for minimum drag power in level flight (see Report A.A.E.E/Res/170).

Asymmetric power (cont'd)

7.3.3 Turns.- When trimmed as in para.7.3.1, it shall be possible to make 30° banked turns in either direction at a speed of 1.3 V_{imp}.

7.4 Control during approach under asymmetric power

7.4.1 With all engines on one side dead, only the outboard propeller being feathered, the live engine(s) throttled back and the aeroplane trimmed with flaps and alighting gear down at a speed of 1.3 V_{s_1} it shall be possible to halve the rate of descent by partially opening up the live engine(s) without undue difficulties being experienced in controlling the resultant swing and roll by use of rudder and ailerons.

8. Lateral and directional trim, stability and control

8.1 Spiral stability

8.1.1 It is not a requirement that the aeroplane be spirally stable since spiral instability produces effects which are easily controlled and, moreover, provision of spiral stability may be detrimental to more important flying aspects. Any spiral instability should, however, be mild.

8.2 Oscillatory stability

8.2.1 When the aeroplane is trimmed for straight flight without sideslip, put into a steady straight sideslip of small angle and the controls abruptly released, the controls shall thereafter return to their trimmed positions. Within one cycle the oscillation of the aeroplane shall be damped to half its original amplitude.

8.3 Application of sideslip

8.3.1 When the aeroplane is trimmed for straight flight without sideslip, the aileron and rudder control forces and deflections shall increase steadily as the angle of sideslip is increased up to the maximum obtainable or the design limit, whichever is the lesser, and there shall be no tendency for the aileron or rudder to overbalance. The angle of sideslip corresponding to a rudder control force of 150 lb. or to full rudder, if this can be produced with a lesser force, shall be within the design limit, and shall be not greater than 67% of the angle of sideslip at which the fin stalls.

8.4 Rate of roll at high speed

8.4.1 At a speed of 0.85 V_D, at a height of 10,000 ft., and with an aileron control force of 50 lb. for a stick control, or 80 lb. for a wheel control, or

D

Lateral and directional trim, stability and control (cont'd)

with full aileron, if this can be produced with a lesser force, the steady rate of roll "p" (degrees per second) shall be not less than

$$\frac{86\ V_D}{S}\left(1 - \frac{0.3}{\sqrt{1 - M^2}}\right)$$

where V_D ... knots ... design diving speed (when V_D is greater than 475 knots the value 475 shall be used).
S .. sq.ft. ... gross wing area (when S is less than 250, the value 250 shall be used).
M ..... Mach No. appropriate to 0.85 V_D at 10,000 ft.

The steady rate of roll shall however be not less than 7 degrees per second.

8.5 Rate of roll at low speed

8.5.1 With flaps and alighting gear both up and down, at a speed of 1.3 times the appropriate stalling speed, and with an aileron control force of 30 lb. for either a stick or wheel control or with full aileron, if this can be produced with a lesser force, the helical angle $\frac{1}{57.3}\frac{pb}{2V}$ shall not be less than 0.07 radians at sea level.

where b ..... feet ..... wing span
V feet per second ..... true air speed

For naval aeroplanes a greater degree of lateral control is required and, with flaps and alighting gear down, the helical angle shall be not less than 0.09 radians at sea level at a speed of 1.1 times the stalling speed, with a force of 20 lb.

8.6 Rate of growth of rolling velocity

8.6.1 At any altitude the rate of growth of rolling velocity shall be such that when the aileron is applied in t seconds the rate of roll at the completion of aileron application is not less than

$$p\left[1 - \frac{1}{k}\left(1 - e^{-k}\right)\right]$$

where $k = \frac{t\ V_1\sqrt{\sigma}}{2.2w}$

Lateral and directional trim, stability and control (cont'd)

Vi ..... knots ..... equivalent airspeed
w ... lb/sq.ft. .... wing loading
e ..... base of Napérian logarithms
σ ..... relative density at appropriate altitude.

8.7 Aileron angle

8.7.1 Under each of the conditions of paras.8.4 and 8.5 the aileron angle when the specified force is applied shall lie within the design limits.

8.8 Change of trim with speed

8.8.1 When all control forces are trimmed out on a climb at the best climbing speed and the aeroplane is then dived to the design diving speed, the aileron control force to maintain zero sideslip without turning shall be less than 15 lb. for a stick control, or 20 lb. for a wheel control, and the rudder control force shall be less than 150 lb.

8.9 Aileron and rudder trimmers

8.9.1 It shall be possible to trim out the aileron and rudder control forces at any engine power over the following speed ranges.-

(i) flaps and alighting gear down, from 1.3 Vs_1 to 1.6 Vs_1, and

(ii) flaps and alighting gear up, from 1.2 Vs_2 to the design diving speed.

8.10 Change of trim with power

8.10.1 When the throttles are rapidly closed the change of aileron control force shall be less than 10 lb. for a stick control or 15 lb. for a wheel control and the change of rudder control force less than 75 lb.

9. Longitudinal trim, stability and control

9.1 Static margin

9.1.1 The aeroplane should be statically stable stick free, in all flight conditions over the practical c.g. range. In particular, it shall be statically stable under the following conditions,-

(i) flaps and alighting gear down, from 1.2 Vs_1 to 1.6 Vs_1 with the engine(s),-

(a) throttled, and

E

Longitudinal trim, stability and control (cont'd)

(b) developing power to give level flight at 1.6 Vs_1 with flaps and alighting gear down,

(ii) flaps and alighting gear up, from the best climbing speed to the design diving speed, with the engine(s),

(a) throttled, and

(b) developing maximum continuous power.

9.1.2 The static stability margin, stick fixed, may be less than the static stability margin, stick free, but such difference shall not exceed 0.05 at speeds up to the combat power level speed.

9.2 Recovery from trimmed dives

9.2.1 In recoveries from trimmed dives, the elevator control force (in lb.) to attain the design normal acceleration, $n_1 g$, shall be within the limits,-

(i) for a stick control: of $3.5\ (14-n_1)$ and $9.5(14-n_1)$, and

(ii) for a wheel control: of $5.0\ (14-n_1)$ and $14.0(14-n_1)$.

On night fighters, in order to give a greater degree of stability, the upper limits given above may be increased.

9.3 Out-of-trim flight

9.3.1 When the aeroplane is trimmed for level flight under maximum climbing power and dived steadily, the elevator control force in the dive shall increase with speed and at the design diving speed shall be positive (i.e. a push force) and less than half the appropriate maximum value defined in para.9.2.

9.3.2 When the aeroplane is dived under the conditions of 9.3.1 and the control column released the normal acceleration shall not exceed the design normal acceleration.

9.4 Turning flight

9.4.1 There shall be no tendency to tighten up in turns.

9.5 Elevator trimmer

9.5.1 It shall be possible to trim out the elevator control forces under any engine power and over

Longitudinal trim, stability and control (cont'd)

the following speed ranges,-

(i) flaps and alighting gear down, from 1.2 Vs_1, (1.1 Vs_1 on naval aeroplanes) to 1.6 Vs_1, and

(ii) flaps and alighting gear up, from 1.2 Vs_2 to the design diving speed.

9.6 Air brakes

9.6.1 The change of elevator control forces when the air brakes are extended and when they are retracted under all conditions for which they are designed to operate shall each be less than 10 lb. for a stick control or 15 lb. for a wheel control.

9.7 Change of trim with power

9.7.1 The change of elevator control force when the throttles are rapidly closed in level flight under combat power shall be less than 10 lb. for a stick control or 15 lb. for a wheel control.

9.8 Pitching moment due to sideslip

9.8.1 The change of elevator control force to counteract any pitching moment due to a straight sideslip corresponding to a rudder control force of 100 lb. or to full rudder if this can be produced with a lesser force, shall be less than 35 lb. for a stick control or 50 lb. for a wheel control.

PART 7
INSTALLATIONS

(8123) T14097/2692 500 1/44 M46506 C&P 752

PART 7

Installations

CONTENTS

Chapter 700	General installational requirements
Chapter 701	Power Plants
Chapter 702	
Chapter 703	Fuel systems
Chapter 704	Oil systems
Chapter 705	Engine liquid cooling systems
Chapter 706	
Chapter 707	Hydraulic installations
Chapter 708	
Chapter 709	Electrical installations
Chapter 710	Radio installations
Chapter 711	Bonding and screening
Chapter 712	Gun and gun turret installations
Chapter 713	Bombing equipment installations
Chapter 714	De-icing installations
Chapter 715	Fire precautions
Chapter 716	Anti-spin parachute installations
Chapter 717	Compass installation
Chapter 718	Pressure cabins
Chapter 719	Installation of instruments
Chapter 720	Emergency dinghy installations
Chapter 721	Oxygen installation
Chapter 722	Torpedo equipment installation
Chapter 723	Glider towing installation
Chapter 724	Installations for the carriage of freight
Chapter 725	Transparent panels
Chapter 726	Installation of rocket assisted take-off gear
Chapter 727	Installation of arrester gear
Chapter 728	Static and pitot pressure sources

A

CHAPTER 700

GENERAL INSTALLATIONAL REQUIREMENTS

A

Amended by A.L.No.33

CHAPTER 700

GENERAL INSTALLATIONAL REQUIREMENTS

Introduction

1. Detailed requirements for individual installations are given in the chapters of this part. The purpose of this chapter is to indicate such general requirements as are applicable to all or a number of these installations.

S.I.S.

2. Dimensional details are not given in these chapters, but will be found in the Standard Instruction Sheets and the appropriate sheets shall be consulted for each installation.

3. The individual items of equipment to be installed are those specified in the Appendix A to the Aeroplane Specification and the Appendix to the Power Plant Specification. Detail items not thus specified but called up on the relevant S.I.S. or in the Chapter concerned, shall be installed.

4. Each item shall be installed in accordance with the requirements of the relevant S.I.S.

Accessibility

5. Particular attention shall be given to making all parts readily accessible and any part which requires inspection and/or cleaning as a normal maintenance operation shall be removable with the least possible disturbance to other parts of the aeroplane.

Flexible tubing

6. Where flexible tubing is employed the minimum radius of bending shall be in accordance with Table 1 of this chapter.

Equipment

7. Standard equipment.- Reference should be made to Standardisation Design Memoranda which promulgate requirements for the incorporation of standardised equipment. (See also Chapter 400).

8. Thermometers.- When provision for the fitment of thermometers in pipe lines is called for, standard A.G.S. or other approved types of thermometer pockets shall be employed. Pockets brazed or otherwise affixed to the sides of pipes are not acceptable.

9. Filler caps.- Approved types of filler caps only shall be employed and shall be provided with a chain lanyard to prevent loss. So far as possible one type and size of filler cap only should be used for the various tanks in any aeroplane.

Instruments

10. Aeroplane instruments.- Detailed requirements for the installation of instruments and instrument panels are given in Chapter 719.

11. Test instruments.- When called for, provision shall be made for the fitting of instruments for subsequent use by Experimental Establishments. The necessary requirements for the fitting of these instruments are given in Parts 9 and 10.

12. Instrumentation.- An increasing number of test readings are being taken by an automatic observer, and from time to time additional provision will be required by Experimental Establishments to enable the fitting of instruments suitable for use in such manner. Provision shall be made to enable the automatic observer to be accommodated and the Contractor should consult the D.T.D.(R.D.Inst.2(d)) as early in the design stage as possible regarding this.

Minimum compass distances

13. Installation of any component or part must be in accordance with the requirements of Chapter 717, and the schedules of that chapter should be consulted to obtain the safe minimum distances for installational purposes.

Bonding and screening

14. Requirements for the bonding and screening of all installations are given in Chapter 711 and shall be considered in conjunction with each chapter.

Strength

15. Whenever applicable, strength clauses are introduced into the installation chapter. These have, of necessity, to vary in form, but in all cases the applicability of the general strength requirements of the aeroplane to the installation shall be considered.

Tests

16. Prototype tests.- Unless otherwise stated the tests of this part shall be considered as applying to prototype installations, and shall be conducted on all prototypes.

17. Production tests.- The requirements of Specification No.D.T.D.1000 shall be considered in conjunction with all installations.

18. Component tests.- When a component which is governed by a separate specification is employed, acceptance tests in accordance with the requirements of the appropriate specification shall have been carried out on that component prior to its installation. Where necessary, however, such components shall be included in the subsequent functioning tests of the complete installation.

AP 970 Design Requirements for Aeroplanes AL25-37 19460801 OCR.pdf Page 301

TABLE I

INSTALLATION OF FLEXIBLE TUBING

MINIMUM RADIUS OF BENDS (INCHES)

Bore of pipe (ins.)	Avioflexus+	Flexatex			Petroflex+ and Superflexit+	Skyflex, Silvoflex, and Weatherhead.	
		C2	C6	C7		Flexing	Vibrating
1/8	-					3	1½
3/16	2½	1			1⅛		
¼	3		1	2	1⅜	4	2
5/16	3¾		1¼	2⅛	1⅝		
⅜	4⅜	1½	1½	2¼	1¾	5	2½
7/16	-		1¾	2⅝			
½	5½	2	2	3	2⅛	6	3
⅝	6½	2½	2½	3¾	2½	6½	3½
¾	7	3	3	4½	3	9½	5
⅞	-	3½	3½	5¼	3½		
1	8	4	4	6	4	11	6
1¼		6¼	6¼	7½		13½	7
1½		9	9	9		15½	8
2		-	12	12		21	11

+ From A.D.M. 303.

AP 970 Design Requirements for Aeroplanes AL25-37-1945 0801 1 OCR.pdf

RELEVANT M.A.P. PUBLICATIONS

Specifications

No. D.T.D.1000 – Quantity production of aircraft
No. D.T.D.1028 – General requirements governing acceptance of aircraft type design

Aircraft Design Memoranda

No. 149 – Aircraft Appendices "A" and demands for airborne equipment
No. 477 – Flexible tubing for fuel and oil systems of airframes
No. 500/13 – Standardisation of rigid pipe couplings
No. 500/30 – Standardisation of slide fasteners

No. 581 – Information required in submission of aircraft designs for consideration by M.A.P.
No. 589 – Tube materials for hydraulic and other pressure lines
No. 604 – Locking of nuts – (Excluding pipe couplings)

Standardisation Design Memoranda

No. 43 – Non-transmitting pressure gauges
No. 46 – Rubber materials for use with aircraft fluids
No. 52 – Altimeters
No. 59 – Pressure regulating valves for aircraft pneumatic systems
No. 60 – Oil water traps for aircraft pneumatic systems

Airworthiness Technical Notes

No. 124 – Installation of flexible tanks in aircraft
No. 142 – Temperature for design and testing of instruments and equipment for aeroplanes

CHAPTER 701

POWER PLANTS

Note.- The subject matter of this chapter was previously contained in A.P.970, Chapter 701 "Engine installations", Chapter 702 "Engine accessories installation", Chapter 805, Chapter 1002, Chapter 1003; D.T.D.Specification No.2004, D.T.D.Technical Circular No.453, and contemporary Power Plant Specifications.

A

CONTENTS

	Para.
Introduction -	1
Definition	1.3
Basic requirements -	2
Interchangeability	2.4
Power Plant changing	2.5
Strength	2.6
Materials and processes	2.7
Quantity production	2.8
Attitude of operation	2.9
Engine air intakes -	3
Responsibility for design	3.6
Tests	3.7
Bonding and screening	4
Controls -	5
Operating loads	5.3
Cooling -	6
Air cooled engines	6.1
Liquid cooled engines	6.2
Accessories	6.3
Corrosion	7
Cowling	8
Drains	9
Electrical	10
Exhaust system	11
Fire prevention	12
Fuel system	13
Interchangeability	14
Maintenance	15
Oil system	16
Propeller feathering	17
Propeller fittings	18
Slinging	19
Starting	20
Tests	21
Thermometers	22
Vibration -	23
Parts attached to the engine	23.2

Issued on 1st Aug.1945
(Re-issued on 1st Aug. 1946)

CHAPTER 701

POWER PLANTS

1. Introduction

1.1 The requirements of this chapter are applicable, to the design, construction and installation of all power plants. The requirements of the remainder of this publication shall be considered in conjunction with this chapter. Specification D.T.D.(R.D.I.) 3004 "Power Plants - General Requirements" deals with the contractual responsibility of manufacturers in relation to general requirements for the production and installation of power plants.

1.2 The special requirements applicable to a particular design of a power plant will be given in the individual Power Plant Specification, of which the requirements of this chapter will form a part. In the event of any conflict between the requirements of a Power Plant Specification and those referred to in para.1, the requirements given in the Power Plant Specification take precedence. Where new requirements are contemplated for the first time between the issue of a Prototype Specification and the placing of a production contract, compliance is required only if called for in the Production Specification.

1.3 Definition

1.3.1 A power plant is defined as a self contained unit, easily and quickly detachable from the airframe, comprising the engine and those ancillary items which can be removed with it from the airframe with the smallest number of disconnections and the least disturbance of individual parts.

1.3.2 Power plants will fall into two classes, namely,-

(i) those designed and/or constructed by other than the Aircraft Contractor, (generally as standard articles for universal application and not designed against any particular type or range of aeroplane), and

(ii) those designed and/or constructed by an Aircraft Contractor, (generally for a particular type or range of aeroplane).

2. Basic requirements

2.1 All aeroplanes shall be designed to accommodate power plants to facilitate engine changing and to reduce the times of aeroplane unserviceability. B

Basic requirements (cont'd)

2.2 In providing for the power plant the Aircraft Contractor retains the responsibility for ensuring that the aeroplane will fulfil its specified function. When the power plant is designed other than by the Engine Contractor, the Aircraft Contractor shall obtain certification that, as regards the functioning of the engine itself, the design of the power plant is to the satisfaction of the Engine Contractor.

2.3 The airframe - engine - propeller combination shall be such that, throughout the airspeed range for which the aeroplane is designed, the engine speed will remain within the limits specified by the Engine Contractor.

2.4 Interchangeability

2.4.1 To effect interchangeability power plants of both types should, wherever possible, be built to non-positional standards so that a given power plant is suitable, without alteration, for fitting to any nacelle position on an aeroplane for which it is designed. Where differences are unavoidable the variations shall be controlled by a "Power Plant Assembly Scheme" approved by P.D.T.D.

2.5 Power Plant changing

2.5.1 The design shall be such as to enable the removal of a power plant and the fitment of a replacement to be effected within one hour, excluding the time taken to remove and refit a propeller.

2.6 Strength

2.6.1 The strength of the complete power plant and its installation shall be at least equal to that required for the airframe under the relevant loading conditions of this publication.

2.7 Materials and processes

2.7.1 The general detail design of the power plant and the use of materials and standardized parts shall be in accordance with the relevant requirements of Part 4.

2.8 Quantity production

2.8.1 The design, construction and constituent materials of the power plant shall be such as to facilitate its manufacture in quantity.

Basic requirements (cont'd)

2.9 Attitude of operation

2.9.1 The engine and all the equipment necessary for its control and functioning shall be installed so that satisfactory performance at all angles of inclination of the aeroplane in flight up to 35° to both the longitudinal and transverse axes of the aeroplane, is ensured.

3. Engine air intakes

3.1 The engine air intakes of all landplanes and amphibians shall be arranged to give, under the control of the pilot and without adverse effect on the functioning of the engine, alternative supplies of hot air and cleaned cold air in addition to the full ram intake of uncleaned cold air. The alternative supply of hot air need not be made in the case of engines fitted with carburettors having adequately oil heated throttles and barrels.

3.2 Engine air filters complying with Specification No.D.T.D.(R.D.I.) 3900 shall be installed in accordance with requirements of Chapter 105 and Specification No.D.T.D.(R.D.I.) 3901.

3.3 All forward facing intakes whether associated with ice immune carburettors or not, shall be protected from ice formation in accordance with Chapter 714. On all engines the sheltered air intake shall be arranged so as to open automatically should the full ram intake become obstructed.

3.4 Unless otherwise agreed by M.O.S.(R.D.I.) all other openings in the intake shall be suitably protected by wire mesh screens to prevent the entry of foreign bodies.

3.5 The design of the air intake shall be such that it will not suffer damage in the event of a back-fire. If a relief valve is incorporated to meet this requirement the valve and its installation shall be to the approval of M.O.S.(R.D.I.) and it shall discharge outside the engine cowling in such a manner that no risk of fire is introduced.

3.6 Responsibility for design

3.6.1 The engine air intake may be an airframe or a power plant part and in the latter case may be supplied as an engine part. The responsibility for the design approval of the whole air intake assembly rests with M.O.S.(R.D.I.) and should be discussed with that branch at an early stage.

C

Engine air intakes (cont'd)

3.6.2 The design responsibility for the air filter and/or ice-guard will rest with,-

(i) The airframe contractor, when the air intake together with its associated cowling is an airframe part. The air filter and/or iceguard shall then be deemed airframe parts and be called up in the Airframe D.I.S.

(ii) The power plant designer, when the air intake and cowling are power plant parts. The air filter and/or ice-guard shall then be deemed power plant parts and be called up in the Power Plant D.I.S.

(iii) The engine designer, when the air intake is entirely suspended from the engine. The air filter and/or ice-guard shall then be deemed engine parts and be called up in the Engine D.I.S.

3.7 Tests

3.7.1 The efficiency of the prototype assembly of air intakes embodying an air filter shall be demonstrated by tests in an approved sand tunnel. For this purpose a prototype assembly shall be submitted for approval before any flight tests are commenced.

4. Bonding and screening

4.1 The bonding and screening of the power plant shall comply with the requirements of Chapter 711.

5. Controls

5.1 Controls shall be arranged to operate as far as possible in the same sense as the pilots cockpit levers (see Chapter 103). The design of the controls shall be such that the settings are not affected by movement of the engine on its flexible mounting.

5.2 The cooling gill controls of air cooled engines in multi-engined aeroplanes shall be arranged so that it is possible to close the gills of a stopped engine without interfering with the setting of the gills of the remaining engine(s).

5.3 Operating loads

5.3.1 (Requirements in preparation).

6. Cooling

6.1 Air cooled engines

6.1.1 Provision shall be made on air cooled engines for satisfactory cooling under the most adverse atmospheric conditions specified for the aeroplane. The cooling shall be adjustable in flight and shall preferably be controlled by automatic operation with override by the pilot.

6.1.2 The temperature of the hottest cylinder (when corrected to the most adverse atmospheric conditions for which the aeroplane is designed, using the formula of Chapter 1003) shall not exceed the maximum permissible cylinder temperature specified in the Engine Operational Limitations for the appropriate power condition.

6.2 Liquid cooled engines

6.2.1 On liquid cooled engines an efficient cooling system shall be installed in accordance with the requirements of Chapter 705. The cooling system shall be adequate under the most adverse atmospheric conditions specified for the aeroplane.

6.3 Accessories

6.3.1 The installation of all engine accessories shall be such as to provide adequate cooling for the most adverse atmospheric conditions specified for the aeroplane and acceptance of the accessory cooling systems employed will normally be given as a result of flight trials, details of which are given in Chapter 1004.

6.3.2 The following detailed requirements shall be complied with,-

(i) R.A.E. and Arrow compressors. The R.A.E. and Arrow air compressors are lubricated by oil circulating between the oil reservoir and the compressor. An oil cooler shall be fitted in the oil supply pipe to the compressor (i.e. between oil reservoir and air compressor oil inlet) in order to give the necessary cooling. A suitable cooler is shown on S.I.S.251 and is designed for ducted cooling with at least 2" inlet and outlet pipes. An airspeed of 88 f.p.s is required through the cooler. The temperature of the air leaving the compressor shall at no time exceed 90°C when corrected for atmospheric temperature. D

(ii) Heywood and B.T.H. compressors. The temperatures of the Heywood (Type S.H.6/2) and B.T.H. (Type A.V.) compressors shall at no time exceed 110°C and 70°C respectively when corrected for atmospheric temperature.

(iii) Electrical generators. The air pipes which supply the air to an engine driven generator for cooling purposes shall be arranged to give an air flow in accordance with the quantity specified for the generator in the relevant S.I.S.

7. Corrosion

7.1 Power plants shall receive Class 1 protective treatment against corrosion (see Chapter 801).

7.2 The power plant shall be able to withstand satisfactorily the sudden changes in temperature and humidity experienced in tropical climates. All components shall be protected effectively against the entry of foreign liquids (e.g. rain, hydraulic fluid, engine coolant). Components, when necessary, shall also be provided with vents to secure adequate internal ventilation.

7.3 Parts which are to be exposed to the action of fuel or water shall preferably be made in stainless steel.

8. Cowling

8.1 (Requirements in preparation).

9. Drains

9.1 Drains for fuel, oil and other inflammable liquids shall discharge to atmosphere clear of the exhausts. The discharge shall be arranged so as to avoid the contamination of any part of the landing gear both in flight and on the ground. Where necessary, collector boxes shall be provided to meet this requirement.

10. Electrical

10.1 The electrical installation shall comply with the requirements of Chapter 709.

11. Exhaust system

11.1 When exhaust tail pipes are fitted, arrangements shall be made to relieve the exhaust manifolds or rings and their attachments from any excessive stresses which may be set up by expansion or engine flexibility. All

such arrangements shall be included in the aeroplane part of the exhaust system and not by any modification of the manifold or ring supplied as an engine part. Where the exhaust heat is utilised to provide warm air for the cabin the consequences of leakage are likely to be serious and special care shall therefore be taken to eliminate the risk of pipes cracking.

11.2 Suppression of exhaust flames and glow shall be effected when specified. The approval of M.O.S.(R.D.I.) shall be obtained to the scheme adopted for each aeroplane type (see Chapter 100 and 102).

12. Fire prevention

12.1 The fire prevention requirements of Chapter 715 shall be met.

13. Fuel system

13.1 The fuel system shall conform to the requirements of Chapter 703.

14. Interchangeability

14.1 The attachments of the power plant to the airframe shall comply both positionally and in detail with one of the standards agreed by C.S.(Air).

14.2 All power plants of a particular design shall be interchangeable on the type of aeroplane for which they are designed or on which they are used. The Aircraft Contractor may be called upon to demonstrate that this requirement is met by an actual test in the initial stage of production.

14.3 All parts and components of the power plant shall comply with requirements of Chapter 806 and strict attention shall be paid to the accurate location of all accessory attachment points (e.g. clips), which might affect interchangeability.

15. Maintenance

15.1 To facilitate maintenance the power plant design shall conform to the relevant requirements of Chapters 800, 803 and 805.

15.2 The main pick-up points for attaching the power plant to the aeroplane shall be in front of the bulkhead and the airframe fittings containing the pick-up points shall be readily replaceable in the event of damage.

15.3 Engine driven accessories shall be grouped on an auxiliary drive gear box. This shall be mounted on the

airframe and preferably with the fireproof bulkhead intervening between it and the engine.

15.4 An adequate space shall be provided between the rear of the engine and the fireproof bulkhead to facilitate the making of the joints etc., and the break points for all items of power plant structure, controls, accessories, pipes and couplings shall, as far as possible, be in one vertical plane within this space. Break points for controls and pipes shall be of approved quick release type, and the couplings of pipes carrying fluids should be of an approved self sealing type. Every effort shall be made to minimise the numbers of panels or doors which have to be removed to give access to the break points.

15.5 The design shall be such as to enable periodical examination, adjustment and top overhauls of the engine and accessories to be effected in a minimum of time and with a minimum of labour. As far as possible the design should enable this to be done without necessitating removal from the power plant, or removal of the power plant from the aeroplane.

15.6 The installation of the engine in the power plant shall be such as to enable the engine itself to be removed without having to dismantle the accessories and so that all accessories can be readily replaced and maintained. So far as possible the design should be such that the engine can be replaced without the removal of accessories being necessary.

15.7 It shall be possible to remove and replace the engine itself in not more than six hours and with the expenditure of not more than 16 man hours. On naval aeroplanes the engine itself shall be removable with the aeroplane in both the tail-up and the tail-down attitudes.

15.8 Provision shall be made for the use of engine hand turning gear+ when called for in the relevant Power Plant Specification. Such hand turning gear shall be so designed that the engine can be turned by hand in each direction and so that the hand turning gear is automatically disengaged in the event of the engine being inadvertently started up.

15.9 All ancillary equipment in the power plant shall be disposed to allow easy removal without disturbing the engine in its mounting and without undue dismantling of other parts.

+ D.E.D. Technical Memorandum No.1/43 details the requirements particularly applicable to engine design.

15.10 Parts which require frequent inspection or replacement shall be easily accessible and fully visible to a mechanic working on them. Provision shall be made for the examination, adjustment and lubrication of all parts.

16. Oil system

16.1 The oil system shall comply with the requirements of Chapter 704.

17. Propeller feathering

17.1 When fully feathering propellers are specified the following requirements shall be met,-

(i) the design shall be such that, under the operating conditions specified for the aeroplane, the complete feathering cycle can be carried out at least twice,

(ii) on each propeller, means shall be provided whereby the propeller can be feathered in the most adverse conditions of attitude and airspeed which would be likely to arise following sudden failure of the engine. It is desirable that this requirement should be met by the means provided for feathering propellers under sub para.(i). If this is not possible a separate emergency system shall be provided and shall be such as to enable the propeller to be feathered at least once under these conditions, and

(iii) the feathering system of each propeller shall be separate from, and independent of, those of the other propellers.

18. Propeller fittings

18.1 As far as possible arrangements shall be made for the fitting and operation of the necessary ancillary equipment applicable to any type of propeller which is likely to be fitted. Propeller de-icing fittings when specified shall be arranged in accordance with the requirements of Chapter 714.

19. Slinging

19.1 Means shall be provided for slinging the complete power plant both with and without the propeller, at suitable angles for attachment to,-

(i) the power plant stand,
(ii) the aeroplane in tail-down position, and
(iii) the aeroplane in tail-up position.

F

19.2 It shall be possible to vary the angle of slinging of the power plant whilst actually suspended, to facilitate removal from aeroplane to stand or vice versa. The arrangements shall be such that there is no necessity to remove any parts of the power plant other than small access doors.

20. Starting

20.1 Starting arrangements shall be in accordance with the relevant requirements of Chapter 100 and 102. Starting ignition when employed shall be effected by means of booster coils.

21. Tests

21.1 All new designs of power plant and, when specified in the relevant Power Plant Specification, new assemblies of an existing power plant together with any subsequent production power plant embodying alterations or modifications likely to affect the performance of the power plant, shall be submitted to type and acceptance tests in accordance with the requirements of C.S.(Air). Schedules of tests will be agreed for each design of power plant.

22. Thermometers

22.1 On each air cooled engine a thermo-couple thermometer shall be permanently installed to record the temperature of the hottest cylinder. The engine and aeroplane sections of the thermo-couple leads shall be connected by a plug and socket specially approved for this purpose. Such plug and socket shall be mounted on the engine side of the bulkhead.

22.2 Provision shall be made on all power plants to enable the fitting of a service type transmitting air intake thermometer in an approved position which will enable the air-intake temperature to be measured.

23. Vibration

23.1 The Aircraft Contractor shall be responsible for matching the power plant with the airframe as regards vibration.

23.2 Parts attached to the engine

23.2.1 The crankcase walls of an engine are liable to vibrate at very high frequencies (1000-2000 c.p.s.) so that rigidly attached parts having too small an inertia to change appreciably either the frequency or amplitude of these vibrations are subject to accelerations which may be as high as 50g.

23.2.2 When, therefore, parts whose function does not demand rigid mounting are attached to the engine wall they shall either,-

(i) be mounted flexibly in a manner which will insulate them effectively from the high frequency vibrations and yet prevent resonance at lower frequencies, or

(ii) be designed to withstand the accelerations involved when mounted rigidly.

23.2.3 Parts whose function demands rigid attachment shall be designed to withstand the consequent acceleration.

G

REVELANT M.O.S. PUBLICATIONS

Specifications

No. D.T.D.1000 - Quantity production of aircraft
No. D.T.D.1003 - Identification marks on aircraft and aircraft parts
No. D.T.D.1028 - General requirements governing acceptance of aircraft type design
No. D.E.D.2000 - Schedule of tests for aero engines
No. D.T.D.2001 - Design requirements and schedule of type and 'series' tests for aero engine ignition apparatus
No. D.T.D.2002 - Design requirements and schedule of tests for aero engine ignition cable
No. D.T.D.2006 - Design requirements for propellers
No. D.E.D.2008 - Specification and schedule of tests for radiators
No. D.E.D.2010 - Specification and schedule of tests for oil coolers

No. D.E.D.2024 - Interchangeability requirements for engines and accessories
No. D.T.D.(RDI) 3004 - Power plants - General requirements
No. D.T.D.(RDI) 3900 - Engine air filters (wet and dry types)
No. D.T.D.(RDI) 3901 - Installation requirements for engine air filters

Aircraft Design Memoranda

No. 149 - Appendices "A" and demands for airborne equipment
No. 257 - Repair scheme for aeroplanes
No. 540 - Ignition starting system
No. 548 - Positive locking for A.G.S. and similar pipe couplings
No. 567 - Engine throttle control linkage
No. 583 - Fire protection for aircraft - Special requirements
No. 500/25 - Standardisation of propeller C.S.U's for 2000 H.P. range of engine
No. 500/33 - Standardisation of cowling fasteners

Standardisation Design Memoranda

No. 5 - Air filters for pneumatic systems
No.18 - Charging valves air and hydraulic
No.29 - Kigass hand priming pumps for engine starting
No.32 - Air compressors for aircraft pneumatic systems
No.63 - Engine speed indicators

RELEVANT M.O.S. PUBLICATIONS (CONT'D)

Airworthiness Technical Notes

No. 129 - The detail design of cowling panels, access doors etc.
No. 139 - Engine throttle controls

R.A.E. Technical Notes

No. Eng.345 - Note on the characteristics of sands and fabrics with reference to Aircraft Engine Air cleaners

D.E.D. Technical Memorandum

No.1/43 - Hand turning or "barring" gear on engines

Technical Circulars

D.E.D. Technical Circular No. 121 - Prevention of carburettor and fuel-injector unit icing
C.R.T.O.(E) Technical Circular No.89 - Engine air intakes

CHAPTER 703

FUEL SYSTEMS

Note:- Requirements from ADM.578 and ADM.580 are incorporated, and Amendments to accord with new operational requirements made, by A.L.No.27.

FS/62

CONTENTS

	Para.
Introduction	1
Basic requirements -	
Functioning of the system	2
Pressure of supply	3
Pump requirements	6
Resistance of pipe lines	9
Position of tanks	10
Tank interconnection	11
Non-return valves	12
Isolation	13
Accessibility	14
Materials	15
Approved parts	16
Design of tanks -	
General	17
Tank shell	19
Joints	21
Tank outlet	23
Cleaning	25
Pipe fittings	26
Vent pipes	27
Strength of drop tanks	30
Protection and self-sealing	35
Installation of tanks	36
Filling and draining of tanks	41
Definition of tank capacity -	
Total capacity	47
Effective capacity	48
Pipes -	
Bore	49
Flexible	50
Stainless steel	51
Wrong connections	52
Bending	53
Fastening	54
Joints	56
Fire precautions	58
Pipes in flying boats	59
Pumps -	
Remote	60
Induction priming	63
Starting	64
Cocks -	
Control	65
Tank	67
Drain	68
Bore	69
Idle cut-off control	70
Filters -	
Location	71
Gauges -	
Fuel contents	72
"Gallons Gone" meter	78
Pressure gauges and warning lights	79
Tests -	
Tank pressure tests	81
Fuel flow test	87
Test instruments	89
Fuel jettisoning -	
Basic requirements	91
Design requirements	92
Recommendations	100
Nomenclature -	
Wing tanks	107
Wing centre tanks	108
Fuselage or hull tanks	109
Drop tanks	110
Auxiliary tanks	111
Master engine cocks	112
Cross feed cocks	113
Tank cocks	114
Selector cocks	115
Cock markings	116
Fuel contents gauges	117

Amended by A.L.No.27

CHAPTER 703

FUEL SYSTEMS

Introduction

1. The requirements of this Chapter govern the design, construction, and installation of fuel systems in all aeroplanes unless otherwise stated in the paragraph concerned. General requirements affecting the chapter are given in Chapter 700.

Basic requirements

2. Functioning of the system.- The fuel system shall be designed to ensure satisfactory functioning under all conditions of acceleration, attitude of aeroplane,+ altitude of operation, and with any quantity of fuel in the tanks. When the aeroplane specification calls for aerobatics, including inverted flying, the fuel system shall be arranged so that inversion will not have any adverse effect upon its working when the aeroplane returns to normal flight, and will not result in any appreciable loss of fuel.

3. Pressure of supply.- No part of the system shall at any time be under suction, i.e. at less than atmospheric pressure and the pressure and temperature of the fuel at the carburettor inlet shall remain within the working range of the carburettor under the conditions of para.2.

4. When a balanced pressure reducing valve or its equivalent is necessary to meet this requirement it shall be installed immediately adjacent to the carburettor and shall be arranged to keep the pressure difference between the supply pipe and the air intake within the limits for which the carburettor is designed.

5. The pressure on the delivery side of the engine driven pump shall not be less than 8 lb/sq.in. above atmospheric pressure under the most adverse conditions.

6. Pump requirements.- The number of pumps and their sources of power supply shall comply with the requirements of paras.3 to 8 inclusive with the provisos that one pump shall be directly mounted on and driven from each engine and that there must be a minimum of two power driven pumps per aeroplane.

7. In order that the requirements of para.3 shall be met remote pumps shall be provided in addition to the engine driven pumps. These shall be placed at the lowest point of every tank or group of tanks, and if any part of the fuel system lies between the tank and the remote pump, it shall be so arranged that vapour locks cannot occur at such part.

+ Attitude of aeroplane shall be interpreted as any attitude in which the engine is required to function.

Basic requirements (cont'd)

8. The pumps provided shall be capable of supplying a minimum of 1.25 x the rate of flow needed when the engines are running either at the maximum power permissible for take-off, or at the maximum power permissible in level flight at maximum power altitude, whichever is the greater. It shall be possible to maintain this rate of flow under the most adverse conditions, both as regards the distribution of the remaining fuel among the various tanks and the breakdown of certain of the pumps. The precise interpretation of this will be decided by the DTD (RDI) when the proposed layout of the fuel system is available.

9. Resistance of pipe lines.- The layout of the pipe line system supplying fuel from the tanks to the engine driven pumps shall be such that the pressure drop, between the tank supplying the fuel and the inlet to the engine-driven pump, does not exceed 1 lb/sq.in. when the remote pump is stationary and the rate of flow is as defined in para.8 above. It is recommended that all remote pumps be provided with bye-pass suction lines. The use of banjo fittings, elbows, angle cocks or T pieces should be avoided wherever possible.

10. Position of tanks.- So far as possible tanks forming part of the permanent fuel system shall be carried in the main planes.

11. Tank interconnection.- On multi-engined aeroplanes, all fuel shall be available for any engine or combination of engines, whether the other engine or engines are running or not. On single engined aeroplanes, with the fuel situated in tanks in each wing, means shall be provided so that all the fuel from each tank may be used when the remote pumps are out of action.

12. Non-return valves.- Non-return valves, (or some other fully automatic means) shall be fitted in the fuel pipe lines of systems having two or more tanks, to ensure that no fuel is lost from the remaining tank(s) if one tank is holed or otherwise damaged. The non-return valves shall be situated as close as possible to the point from which the return flow to a damaged tank could otherwise commence, in order that they may isolate the maximum possible amount of pipe line with each tank. These valves are additional to the fitment of crew operated isolating cocks.

13. Isolation.- Means shall be provided for isolating each separate part of the fuel system in flight. In general this means that each tank as well as each engine should be capable of being individually isolated, but the precise interpretation will be decided at the fuel system conference for each new types of aeroplane. A master engine cock shall be provided for each engine and shall be under the control of the pilot. Engine isolating controls shall be duplicated in training aeroplanes when they would not otherwise be accessible to both instructor and pupil. Cocks shall be provided in all

Basic requirements (cont'd)

cross feed pipes under the control of the pilot or engineer.

14. Accessibility.- All fuel gauges, warning lights, and other indicators shall be conveniently located in groups. Cocks and remote controls shall be likewise grouped so that their positions are relative to the appropriate indicators thus enabling reference to the gauges and alteration to the setting of the controls to be made with a minimum of movement. Guidance on this matter should be obtained from the DTD (RDI) at an early stage in the design.

15. Materials.- The materials used in the construction of the fuel system shall comply with the latest issues of the appropriate B.S., D.T.D. or other approved specifications.

16. Approved parts.- Approved types of components or equipment only shall be employed and wherever possible standardised parts shall be incorporated.

Design of tanks

17. General.- The design of the tanks and the layout of the pipe lines should aim at preventing water, or other foreign matter, from collecting at any point where it is likely to accelerate corrosion, or where it can freeze or otherwise become solid and so interfere with the functioning of the system. When it is impossible to avoid the collection of water, sumps of adequate capacity shall be provided, and these sumps shall be provided with means whereby they may be drained readily. It is particularly necessary that collecter boxes and other components, which are common to several tanks, shall be adequately protected in this manner. Particular attention should be given to the location of the filler caps, so that the total capacity of the tanks is as great as possible and to ensure that water will not penetrate or lodge around the filler and be allowed to enter the system when the cap is removed. The removable cap itself should completely cover and overlap the edges of the filler neck, rather than be recessed within the neck.

18. Training and communication type aeroplanes need have only one fuel tank; all other types shall have at least two tanks. These two or more tanks may be built as a single unit provided that the divisions between them are petrol tight and that each has an independent inlet and outlet.

19. Tank shell.- Sumps or other fittings, if essential in the design of a tank shell, should not be beaten out of the shell but should be a separate part to avoid thinning the material and sudden changes of section. The use of heavy metal parts for such fittings in light alloy tanks should be avoided. For aluminium or aluminium alloy tanks, anodised aluminium or aluminium alloy sumps are recommended. Alclad or anodised alclad sumps are suitable for such tanks and also for magnesium alloy tanks.

FS/64

Design of tanks (cont'd)

20. The metal sheet used in a tank shell should not be bent round a radius smaller than 1" otherwise it will be likely to crack along the bend. The bend should not coincide with a joint in the plating.

21. Joints.- Tank jointing materials shall be either proprietary preparations approved in ADM.275 or shall comply with Specification D.T.D.219 or 295. These materials may be coated with an approved liquid jointing medium before assembly to facilitate the provision of petrol tight joints, but such a liquid should be used sparingly.

22. Soldered tank joints shall be made with soft solder (grade B) to Specification B.S.219. Reference should also be made to paragraph 56.

23. Tank outlet.- A baffle or its equivalent shall be arranged near the tank outlet to the pump to prevent the tank outlet being uncovered by surging.

24. Provision shall be made to prevent the passage of matter from the tank into the pump. Reference should be made to the relevant S.I.S. covering the installation of the remote pumps.

25. Cleaning.- Provision shall be made for the easy inspection and cleaning of every tank.

26. Pipe fittings.- Tanks shall be arranged so that the torque used in screwing the piping on to the tank fitting is not taken by the tank itself but by a spanner used on the tank fitting.

27. Vent pipes.- Each tank shall be provided with a vent pipe venting externally to atmosphere. The vent pipe shall be as short as possible and shall be arranged so that it cannot be blocked by trapped fuel or water and will not preclude complience with the requirements of paragraph 2.

28. The orifice shall be of an approved design not affected by ice accretion or, alternatively, shall be fitted where it will not be subject to this. It shall be protected from being blocked by dirt and shall be positioned so that there is no risk of any vapour which is escaping, catching fire, or entering the crew's quarters. If catapulting or accelerating is called for in the Aeroplane Specification the vents shall be located so that the fuel cannot escape during launching under the accelerations given in Chapter 307.

29. The venting arrangements shall be such that it is impossible for an appreciable amount of fuel to be lost under the conditions of paragraph 2, The diameter of the pipe and its layout shall be such that it will accommodate rapid changes in the differential pressure between the pressure inside the tank and the static pressure of the outside air under the most adverse conditions of climbing or diving.

Design of tanks (cont'd)

30. Strength of drop tanks.- Drop tanks carried internally shall comply with the general strength requirements of the aeroplane as a whole.

31. Drop tanks carried externally together with their attachments to the aeroplane, shall have an ultimate factor of not less than 2 under any combination of the following,-

(i) loads due to normal accelerations from - 1.0g to + 3.0g,

(ii) loads due to sideways accelerations up to 0.5g and

(iii) aerodynamic loads corresponding to speeds up to 400 m.p.h. (EAS).

32. When these tanks are intended for use on aeroplanes for which arresting and accelerating or catapulting are requirements, they shall, together with their attachments, have an ultimate factor in addition of not less than 2.0, when subjected to a forward deceleration of 2.0g and also when subjected to a forward acceleration of 3.25g.

(Para.33 deleted)

34. The requirements of para.30 to 32 inclusive shall be satisfied for all conditions of fuel loading from tank full to tank empty.

35. Protection and self-sealing.- Details of the type of protection to be provided on tanks when installed in various positions in the aeroplane, together with the types of aeroplane affected, are given in Chapter 100. The initial design of the tanks shall be such that the required protection can be provided and also that the protection from corrosion required by Chapter 801 can be applied.

Installation of tanks

36. The tanks shall be arranged so that they can be removed and replaced easily and with the least possible disturbance to the other parts of the aeroplane. Proposals to use integral tanks should be referred to the D.T.D. at an early stage in the design.

37. Tanks shall be supported by a generous area of the aeroplane structure and shall be completely restrained from

D

moving except to the extent which mountings, if flexible, are designed to allow. The mountings of the tanks shall be designed so as to allow for any anticipated distortion of the structure to which they are attached. The tank mountings shall be so arranged that over-tightening of the straps, if used, does not cause distortion of, or other damage to, the tank shell.

38. Only approved materials shall be used as packing between a tank and the metal straps or cradle supporting it (see also Chapter 801).

39. Special attention shall be paid to the efficient draining and venting of closed compartments containing fuel tanks, both on the ground and in flight.

40. The installation of auxiliary tanks and drop tanks shall be such that there is no possibility of any interruption in the fuel supply to the engines - when changing the source of supply or when drop tanks are released.

Filling and draining of tanks

41. Provision shall be made for filling the tanks from standard 4 gallon cans. Hand or foot holds, if necessary, should be provided for the use of the mechanic whilst attending to this operation.

42. On flying boats provision shall also be made for filling the tanks from a pressure connection. The fittings provided shall be suitable for standard ground equipment, details of which can be obtained from D.T.D.(R.D.T). At least two filling points shall be provided and they shall be capable of being used simultaneously and of receiving fuel at a rate of 35 gallons per minute, delivered at a pressure of 10 pounds per square inch. The piping of the refuelling system shall be designed to withstand, without leaking, delivery pressures up to 30 pounds per square inch. The tank vents and balance pipes shall be arranged so as to prevent - until the whole system is full - any of the tanks overflowing or a pressure being built up in any of the tanks.

43. Means shall be provided for draining away any fuel spilled at the filling points. Spilled fuel shall not be able to find its way inside the wings or other components of the aeroplane and precautions shall be taken to prevent the fumes from spilled fuel or leaks entering the cabin.

44. The filler caps shall be completely petrol-tight.

45. Bonding sockets shall be provided at each filling point to ensure the electrical connection of the fuel system to the ground equipment. These sockets shall conform to the standard design shown on S.I.S.1652. Bonding sockets on light alloy tanks shall be of the same material as the tank. The electrical resistance between socket and tank shall not exceed 0.05 ohm.

46. Aeroplanes are sometimes found to be electrically charged to a high potential on landing. To prevent sparking

at the filling point when the first connection is made, some positive and automatic means shall be provided for connecting the fuel and oil tanks to the ground when the aeroplane lands.

Definition of tank capacity

47. Total capacity.- The "total capacity" is the quantity of fuel the tanks will hold when the aeroplane is in the refuelling attitude. The refuelling attitude for land-planes and ship planes is the normal attitude of rest; for seaplanes it is riding at moorings or standing on a trolley, whichever gives the smaller tank capacity.

48. Effective capacity.- The "effective capacity" is the quantity of fuel available for use by the engines when the reading of the fore and aft level is zero and the tanks are filled to "total capacity." The effective capacity shall be used in estimating range.

Pipes

49. Bore.- The bore of the carburettor drain pipe shall not be less than that of the drain union on the carburettor.

50. Flexible.- Approved types of flexible tubing shall be used between the engine and the airframe and at any other points where flexibility is required.

51. Stainless steel.- When stainless steel pipes are employed they shall be subjected, before installation, to an internal air pressure of 100 lb/sq.in. and shall show no sign of leakage when immersed in water. This test shall be carried out after the necessary working on the pipe has been completed.

52. Wrong connections.- All pipes shall be arranged so that it is mechanically impossible to connect them up to the wrong unions. Any special difficulties in complying with this requirement should be brought to the attention of D.T.D.

53. Bending.- Rigid pipes shall not be bent round a radius less than four times the internal pipe diameter. The minimum radius for flexible tubing is laid down for each type of approved tube (see Chapter 700).

54. Fastening.- Pipes shall be firmly clipped to the airframe at frequent intervals. Where there is likely to be relative movement between pipe and airframe approved packing shall be used (see Chapter 801).

55. Clips shall be such that they cannot damage, distort or constrict the pipes by overtightening.

56. Joints.- Pipe joints shall be of an approved type and natural rubber shall not be used.

AP 970 Design Requirements for Aeroplanes AL25-37 19460801 OCR.pdf

Pipes (cont'd)

57. Soft soldered joint fittings on the engine side of the fireproof bulkhead are not acceptable.

58. Fire precautions.- Pipes shall not be installed close to any component from which, in the event of pipes leaking or breaking, fire might originate.

59. Pipes in flying boats.- So far as possible no fuel pipes shall be installed in the hull of a flying boat. When this cannot be avoided all reasonable steps shall be taken to avoid fire risks and the prior concurrence of the D.T.D. with the methods proposed shall be obtained in each case.

Pumps

60. Remote.- Centrifugal type pumps are recommended as they will not pump air into the fuel system when a fuel tank runs dry. Attention is drawn to the need for ensuring that the pump and its installation will be leak-proof owing to its position at the lowest point of the fuel system.

61. The pumps should be driven electrically.

62. So far as possible, the fuel pump power transmission arrangements should be independent of those used for other accessories.

63. Induction priming.- The induction priming pump should be arranged to draw fuel direct from one of the main tanks and should be so positioned that one man may operate the starting and booster coil switches while operating the priming pump. The operator should be able to see the engine being started.

64. Starting.- In some fuel systems it may be necessary to incorporate a hand fuel pump to ensure the starting of the engine. Such a pump shall incorporate a relief valve.

Cocks

65. Control.- As far as possible the system shall be controlled by two position "ON-OFF" cocks only, but in certain cases three way cocks with a central "OFF" position may be used. In all cases the "ON" position shall be located by means of a positive stop fitted to the cock itself. All cock controls shall be provided with labels which show clearly and unambiguously the setting of the cock. These controls shall be operated by a lever, not a hand wheel.

66. Cocks may be operated by remote controls of approved types provided that the remote control is positive in action in both directions, that it has no tendency to creep when in flight (e.g. due to lack of rigidity), and that it is arranged so as to make it mechanically impossible to fit the remote control out of phase with the cock. Cocks situated where there is a risk of the crew moving them inadvertently shall be suitably protected.

Cocks (cont'd)

67. Tank.- A cock or its equivalent shall be fitted at the outlet from each tank so as to make it unnecessary to drain the tanks before disconnecting pipes. Provision shall be made for locking this cock in the open position. For the purpose of this requirement, two tanks connected by a balance pipe may be regarded as one tank.

68. Drain.- A drain cock or its equivalent shall be fitted in each tank or pipe line in such a position that the tank can be completely and rapidly drained when the aeroplane is in the fuelling attitude and additionally, in the case of catapult ship aeroplanes, when at catapulting incidence. Any type of plug that can only be removed with a special tool will not be regarded as a suitable equivalent. For Naval aeroplanes it shall be possible to drain all fuel tanks under gravity by means of one "Admiralty" hose connection within ten minutes. For aircraft carrier borne aeroplanes and catapult ship aeroplanes, the connection shall be by means of the rubber type connector as shown in S.I.S.384, Sheet 3.

69. Bore.- The equivalent area of the bore of each cock shall be not less than the internal area of the pipe line in which it is fitted.

Idle cut-off control

70. When injection type carburettors are fitted a hand operated fuel cut-off control shall be provided and shall be positioned conveniently for operation by the pilot's throttle hand. The design of the remote control shall be such that it is direct acting and positive in both directions and will ensure that the control mechanism on the carburettor will retain its setting until the cockpit control is altered.

Filters

71. Location.- An approved type of fuel filter shall be fitted in an accessible position below, and as close as possible to the inlet of the engine driven pump on each engine, provided that the filter is not in such a position that there is a risk of vapour lock due to the heat of the engine.

Gauges

72. Fuel contents.- A fuel gauge, visible to the pilot or another member of the crew shall be provided for each tank. The gauge shall be visible by night. Particular care is necessary to ensure that the gauge operating mechanism does not foul the tank structure. Minimum clearances to be observed are shown on the relevant S.I.Sheets. A graduated dip-stick shall be provided for each type of tank for checking the gauges in the refuelling attitude.

73. The dial of the gauge shall be initially calibrated when the aeroplane is in the attitude corresponding to zero

F

Gauges (cont'd)

reading on the fore and aft level. A notice shall be placed close to the dial,-

(i) stating that the dial reading is correct only when the fore and aft level is at zero,

(ii) giving the correction to be applied when the aeroplane is in the refuelling attitude, and

(iii) giving the fore and aft level reading corresponding to the refuelling attitude.

74. Alternatively, both calibrations and attitude may be given on the dial itself, the refuelling calibration being the less prominent. The dial shall quote the number of the drawing referred to in para.77.

75. Calibrations of the dial and dipstick shall be determined on each experimental aeroplane, and on the first aeroplane supplied under each contract.

76. The dial calibration test shall be made in the following way. The dial shall be divided into degrees, a temporary disc being fitted on the dial if necessary. The tank shall then be filled in stages of two gallons, the readings in degrees being noted at each stage. Check readings shall be taken when emptying the tank in the same stages. For tanks holding more than ninety gallons, larger stages may be used, each stage corresponding to five degrees on the dial.

77. A drawing shall be provided showing the dial marked in degrees and giving a table of degrees and gallons. This drawing shall quote the tank drawing number, contents gauge serial number, gearing of the contents gauge length of transmission, and other information relevant to the identification of the gauge.

78. "Gallons Gone" meter.- An approved meter capable of registering the quantity of fuel consumed, shall be installed in the fuel line on the delivery side of each engine driven fuel pump on all multi-engined landplanes.

79. Pressure gauges and warning lights.- An approved fuel pressure warning light shall be provided on all aeroplanes and shall be installed so that it operates only when the delivery pressure at the carburettor falls below that at which the carburettor will function safely. This figure may be obtained from the engine or carburettor manufacturer.

80. On individual aeroplanes as called for in the Aeroplane Specification a gauge shall be provided visible to the pilot or other member of the crew which will indicate when the pressure of the petrol supply to the carburettor, i.e.

in the pipe line between the reducing valve (if any) and the float chamber is within correct working limits.

Tests

81. Tank pressure tests.- The first of a new design of metal tank shall be subjected to a test pressure of

$$1.5 \times \left[(0.75n_1 \text{ times the static head}) \text{ plus the superimposed pressure to be used at } 25{,}000 \text{ ft.}\right]$$

where n_1 is the maximum normal acceleration coefficient. The test pressure shall be maintained for 20 minutes. Under this test there shall be,

(i) no leakage, and
(ii) no permanent distortion which would render the tank unserviceable.

82. For the purpose of the test of para.81 the remote fuel pump and its installation shall be considered as part of the tank. In the case of remote pumps fitted with a gland drain connection the rate of leakage through the drain should be negligible.

83. During the test the tank shall be at an attitude corresponding to its position in the aeroplane, when the aeroplane datum line is horizontal. The tank should be supported in a representative manner, but since the test is severe on the top of the tank some additional support for the top is acceptable. Details of the support shall be given on the tank drawings. The test shall be carried out before the self-sealing covering has been applied, but should any fittings be removed during covering the tank shall be re-tested.

84. The static head shall be considered as the vertical distance which will pertain (when the tank is installed in the aeroplane and the aeroplane datum line is horizontal) between the highest level of any fuel in intimate contact with the fuel in the tank and the lowest point of the tank.

85. No rejected tank may be altered and re-submitted without the permission of the Inspector-in-Charge, A.I.D. Approved joint sealing compounds may be used during the construction of a tank but shall not be used for stopping leaks in a complete tank.

86. The test pressure for production tanks shall be two-thirds of the test pressure for prototype tanks and the tank drawings shall quote both of these test pressures.

87. Fuel flow test.- The fuel system shall be subjected to a flow test or tests to determine whether or not the requirements concerning the sizes of pumps (para.8) and the resistance of pipe lines (para.9) have been met.

88. The required rate of flow for each system shall be quoted on the fuel system installation diagram for both prototype and production aeroplanes after agreement with the D.T.D.(R.D.I). G

Tests (cont'd)

89. Test instruments.- A type "F" socket shall be fitted in the positive supply to each remote fuel pump so that an ammeter can be plugged in for ground testing the pumps.

90. When not a standard fitment, provision shall be made for fitting to such aeroplanes as may be specified - in a position visible to pilot or crew - an approved type of flow meter to measure the fuel consumption of each engine.

Fuel jettisoning

91. Basic requirements.- The Aeroplane Specification will indicate when fuel jettisoning shall be provided. The fuel jettisoning installation shall be designed so that the bulk of the fuel can be jettisoned safely and quickly, with the following objectives in view,-

(i) to improve the chances of the aeroplane maintaining height when one or more of its engines fail or when it is partially disabled.

(ii) to reduce landing speed for a forced landing, and

(iii) to increase buoyancy for a forced descent on water.

92. Design requirements.- To ensure that fumes do not collect in the cockpit and to eliminate risk of fire, discharged fuel shall not make contact with any part of the aeroplane.

93. As fuel jettisoning is an emergency service, a mechanical or self contained hydraulic or pneumatic means of operation is preferred. Fuel jettisoning shall be under the control of one member of the crew, and tanks pertaining to a particular engine shall be capable of individual jettisoning.

94. The mock-up conference will decide which member of the crew shall be responsible for jettisoning, and controls shall be conveniently placed for that member.

95. It shall be possible to jettison at least 85% of the total fuel in the shortest possible time, and in any case in not more than 3 minutes.

96. When as much fuel as possible has been jettisoned there shall still be available for use sufficient fuel for ten minutes flight at full throttle.

97. In addition, some fuel shall remain in each tank to prevent the formation of an explosive mixture. The volume of this fuel shall not be less than 1% of the total volume of the tank.

98. Where the syphon system of jettisoning is used it shall be possible to start the jettisoning with a minimum of 25% of fuel in any tank.

Fuel jettisoning (cont'd)

99. The range of speed envisaged with flaps up is from 1.2 times the appropriate stalling speed to the cruising speed. Satisfactory operation of the jettison system shall also be possible over a speed range of 1.2 to 1.4 times the appropriate stalling speed with flaps down.

100. Recommendations.- Various aspects of design are dealt with below. The designer may be aware of other risks and these also should be given full consideration. Published information should be consulted, in particular R.A.E. Reports B.A.1500 and B.A.1586.

101. The danger of fire may arise from the following:-

(a) Electro static discharge by sparking in flight.
(b) Corona or brush discharge.
(c) Electro static discharge on landing.
(d) Flames and carbon particles from the engine exhaust.
(e) Lightning.

102. To meet the requirements of para.92 rigid jettison pipes which project below the surface of the wings, fuselage or hull shall be used. The pipes should be inclined at an angle of about 60° to the horizontal and be sufficiently long to project the fuel well clear of the aeroplane. To reduce drag, the pipes may be made retractable, e.g. by the use of hinged joints, or telescopic pipes, but when in the discharge position they shall be rigid. There shall be no leaks in the pipes themselves.

103. Differences of electrostatic potential and the consequential risk of sparking, may arise on an aeroplane from thunderstorms and hail or dust storms; and also from the electrostatic effects of the jet itself. All parts of the discharge pipe shall be electrically connected to the main earthing system of the aeroplane (see Chapter 711).

104. The charge on the aeroplane as a whole may be sufficient to cause corona or brush discharge. The main safeguard against this is the prevention of fuel touching the aeroplane or passing near projections. As a further precaution, it is advisable to avoid sharp metallic edges and points on parts of the aeroplane near to the path of the discharged fuel. On the discharge pipe itself it is essential that there shall be no sharp edges in contact with the fuel or near to it.

105. The jettison valves should be designed for rapid opening and closing. It should be possible to close the valves quickly not only when jettisoning is completed but also at any intermediate stage, since it is dangerous to land while fuel is emerging.

106. It is not always possible to prevent a local explosion in the discharge pipe on landing, but this is not

AP 970 Design Requirements for Aeroplanes AL25-37 19460801 OCR.pdf

usually serious provided suitable precautions are taken. The closing valve shall be designed to prevent the explosion spreading to the tanks, and the discharge pipe shall be able to withstand the explosion.

Nomenclature

107. Wing tanks.- Wing tanks shall be designated "port wing tanks" or "starboard wing tanks", according to their location and shall be numbered independently in each wing. Numbering shall be consecutive in each row from the inboard tank outwards, commencing with the forward row. Inboard tanks of subsequent rows shall be numbered to follow the outboard tank of the row immediately in front. The following diagram illustrates a typical example.

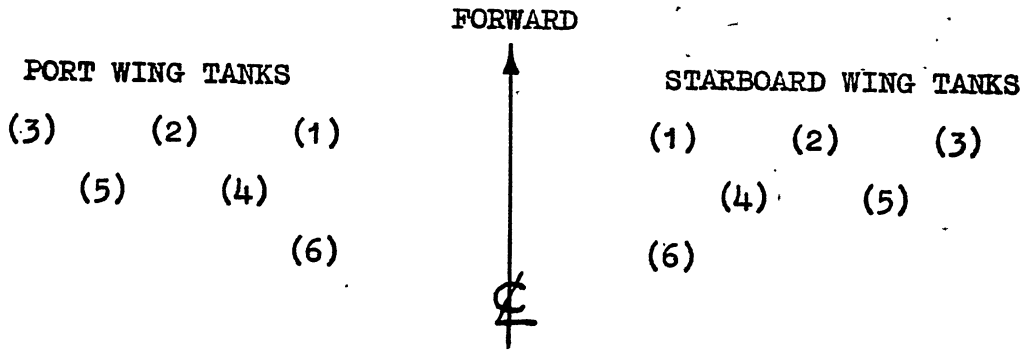

108. Wing centre tanks.- Tanks located within the centre section of the wing and having some part over the centre line of the aeroplane shall be designated "wing centre tanks" and shall be numbered consecutively from front to rear. If no part is over the centre line they shall be considered as "wing tanks" and numbered accordingly.

109. Fuselage or hull tanks.- Tanks located in the fuselage shall be designated "fuselage tanks"+ and shall be numbered consecutively from front to rear. When more than one row of tanks is fitted they shall be designated "port fuselage tanks," "centre fuselage tanks", or "starboard fuselage tanks" and each row shall be numbered consecutively from front to rear.

ϕ 110. Drop tanks.- Fuel tanks which can be dropped in flight shall be designated "drop tanks". The nomenclature and numbering of such tanks shall be in accordance with paras. 107 and 109, with the words "drop tank" substituted for "tank."

111. Auxiliary tanks.- Fuel tanks additional to those forming part of the permanent fuel system which cannot be dropped in flight shall be designated "auxiliary tanks." The nomenclature and numbering of such tanks shall be in accordance with paras.107 and 109, with the words "auxiliary tank" substituted for "tank."

+ or "hull tanks" as appropriate.

ϕ Res/Acft/6122.

Nomenclature (cont'd)

112. Master engine cocks.- Cocks which isolate each engine from the main fuel supply shall be designated "master engine cocks." (see para.13).

113. Cross feed cocks.- Cocks shall be known as "port cross feed cocks" when controlling the fuel transfer between the inner and outer engine fuel systems on the port side, and as "starboard cross feed cocks" when controlling the fuel transfer between the inner and outer engine fuel systems on the starboard side. Cocks controlling the transfer of fuel from one side of the aeroplane to the other shall be designated "centre cross feed cocks."

114. Tank cocks.- Each tank cock shall be known by the same number as that given to the tank it controls. If a tank cock controls two tanks (see para.67), its nomenclature shall include both tank numbers.

115. Selector cocks.- When selector cocks are fitted they shall have their sections numbered according to the tanks they select.

116. Cock markings.- In addition to any special markings called for above, all cocks shall be labelled clearly; "ON" and "OFF".

117. Fuel contents gauges.- Each fuel contents gauge or, when fitted, warning light, shall be known and numbered in accordance with the tank for which it indicates. When flowmeters are used for individual tanks they shall be known and numbered in similar fashion.

RELEVANT M.O.S. PUBLICATIONS

Aircraft Design Memoranda

No. 477 - Flexible tubing for fuel and oil systems of airframes

No. 500/23 - Warning lamps
No. 570 - Plywood for use in jettisonable tanks
No. 584 - Approval of designs for drop fuel tanks
No. 618 - Intregal fuel tanks

Standardisation Design Memoranda

No. 2 - Hand priming and carburettor de-icing pumps
No. 4 - Fuel contents gauges
No. 9 - Direct current motors for aircraft
No.12 - Electric switches for aircraft
No.16 - Electrical plugs and sockets
No.40 - Suction by-pass pressure control valves for aircraft fuel systems
No.62 - Cut-off valves for fuel transfer systems

Airworthiness Technical Notes

No. 115 - Vulnerability of fuel tanks
No. 124 - Installation of flexible tanks in aircraft

R.A.E. Reports

No. Aero 1846 - Note giving a survey of wind tunnel tests on drop tanks
No. B.A. 1500 - An investigation into the problem of fuel jettisoning - Part 1 Laboratory tests
No. B.A. 1586 - An investigation into the problem of fuel jettisoning - Part 2 Flight tests
No. S.M.E.3194 - The design of fuel tanks
No. S.M.E.3245 - Drop tanks
No. E.3977 - The installation of drop tanks on aircraft from the fuel system point of view
No. A.D.144 - Flow test apparatus Mk.I for aircraft fuel systems

Relevant M.O.S. PUBLICATIONS (CONT'D)

R.A.E. Technical Notes

No. Aero 1715 - The estimation of the aerodynamic loads on external stores

Scientific and Technical Memoranda

No.26/44 - Refuelling flying boats during flight
No.S.2/44 - Protection of aircraft fuel tanks against gunfire (secret)

CHAPTER 704

OIL SYSTEMS

Note.- The subject matter of this Chapter has been completely revised and the Chapter re-issued with A.L.No.23. New requirements introduced by J.A.C.Paper No.199 have been incorporated.

FS/39

CONTENTS

	Para.
Introduction	1
Basic requirements -	
Independent systems	2
Accessibility	3
Cooling	4
Capacity	5
Airspace	8
Scavenge pressure	10
Functioning of the system	11
Hydraulic resistance	13
Cold starting	14
Fittings	16
Design of tanks -	
Oil dilution	17
Propeller operation	18
Cleaning	19
Pipe fittings	20
Internal piping	21
Protection of materials	22
Installation of tanks -	
Location	23
Mounting	27
Packing materials	28
Auxiliary oil tanks	29
Filling and draining of tanks	30
Filling	31
Filler caps	32
Dipstick	33
Draining	34
Naval aeroplanes	36
Feathering pump -	
Installation	37
Pipes -	
Bore of pipes	38
Length of pipes	39
Draining of pipes	40
Propeller governor and feathering pipes	41
Flexible tubing	42
Bending pipes	43
Fastening pipes	44
Pipes in flying boats	45
Fire precautions	46
Joints	47
Wrong connections	50
Cocks -	
Shut-off cock	51
Bore of cocks	52
Cock controls	53
Strainers -	
Suction strainer	57
Vent and vent pipes -	
Vents	60
Vent pipes	61
Tank pressurising valves	62
Engine breather pipes	63
Pressure gauges -	
Engine	64
Oil cooler	65
Thermometers	66
Visibility	68
Tests -	
Rig test	69
Tank type tests	70
Stainless steel pipes	74

CHAPTER 704

OIL SYSTEMS

Introduction

1. The requirements of this chapter govern the design, construction, and installation of oil systems.

Basic requirements

2. Independent systems.- In the case of multi-engined aeroplanes, each engine shall be provided with an entirely independent oil system.

3. Accessibility.- Every part of the system shall be readily accessible, and any part which requires inspection and/or cleaning as a normal maintenance operation shall be removable with the least possible disturbance of other parts of the aeroplane.

4. Cooling.- Each system shall be designed to ensure that a satisfactory circulation of the oil is maintained and that the temperature is controlled within the limits required by the D.G.T.D. when the aeroplane is operating under the specified operational conditions for the type of engine fitted, and the most adverse climatic conditions required by Chapter 105. Oil coolers mounted on the power plant shall be flexibly mounted to reduce the risk of damage due to vibration and inertia loads.

5. Capacity.- In each independent oil system the permanent tankage capacity shall be sufficient for the maximum endurance which the fuel provided for in the initial design, will allow.

6. The total volume of the tank shall not be less than that of the nett oil capacity plus the air space when these are determined in accordance with paragraphs 7 and 8 respectively.

7. The nett oil capacity of the tank shall not be less than B gallons, when B is calculated as follows:-

(i) For an endurance not exceeding 8 hours,

$$B = C\,(E + 2) + P$$

or

$$B = C'(E' + 2) + P$$

whichever is the greater.

+ From J.A.C.Paper No.283.

AP 970 Design Requirements for Aeroplanes AL25-37 19460801 OCR.pdf

Basic requirements (cont'd)

(ii) For an endurance exceeding 8 hours

$$B = 1.25\ C.E. + P$$

or

$$B = 1.25\ C' E' + P$$

whichever is the greater.

where C ... g.p.h. ... the maximum rate of oil consumption approved by CRD.(RDE1c) when the engine is operating at maximum rpm. for economical cruising.

C'... g.p.h. ... the maximum rate of oil consumption approved by CRD (RDE1c) when the engine is operating under conditions giving greatest range.

E ... hrs. ..... Endurance at maximum power available for economical cruising at the operational height quoted in the Aeroplane Specification, the endurance being based on the maximum fuel tankage including permanent and auxiliary tanks.

E'... hrs. ..... Endurance when the aeroplane is operating under conditions giving the greatest range at any operational altitude the endurance being based on the maximum fuel tankage including permanent and auxiliary tanks.

P ... gallons .. oil required to operate the hydraulically controlled, fully feathering propeller if fitted.

8. Air space.- The air space above the oil in the tank shall be reasonably compact in shape and preferably of a minimum depth of 6". Its volume shall not be less than any of the following,-

(i) the known capacity of the engine sump plus the volume of oil which may be displaced from the propeller.

(ii) the capacity recommended by the engine manufacturer, or

(iii) the capacity indicated in the following table,-

Basic requirements (cont'd)

Nett Capacity of Tank Galls. of Oil	Air Space Gallons
Not exceeding 8	$2\frac{1}{2}$
Exceeding 8 but not exceeding 15	3
Exceeding 15 but not exceeding 30	$3\frac{1}{2}$
Exceeding 30	$12\frac{1}{2}\%$ of the nett oil capacity.

9. If, after the initial design has been completed, an increase in the permanent or auxiliary fuel tankage is made, the value of B in para.7 shall be calculated on the new values of E or E'. Accommodation for the additional oil necessary to meet this requirement should, whenever possible, be provided by increasing the capacity of the main tank but if this is not possible the additional oil may be accommodated in an auxiliary oil tank installed in accordance with para.29.

10. Scavenge pressure.- The design of the oil system shall be such that the scavenge pressure at any point in the system does not exceed the maximum safe working pressure at that point when starting the engine at -10°C with undiluted oil of the specified grade. The maximum safe working pressure shall, unless otherwise specified, be interpreted as being two thirds of the production test pressure and the latter shall be stated on the drawings.

11. Functioning of the system.- The oil system on all aeroplanes shall be designed to ensure satisfactory functioning under all conditions of acceleration, attitude of aeroplane+, and altitude of operation and also to ensure that, with the exception of the quantity trapped for propeller feathering, the entire oil content of the tank is available for use.

12. On all fighters and aerobatic trainers and on other aeroplanes when aerobatics are called for in the Aeroplane Specification, the oil system shall be so arranged that the engine receives an adequate supply of oil,-

(i) under conditions involving the application of negative "g", for a period of 15 seconds or until the fuel supply to the engine fails, whichever is the longer,

(ii) during recovery from conditions involving the application of negative "g", and

(iii) after recovery from conditions involving the application of negative "g".

+ "Attitude of aeroplane" shall be interpreted as any attitude in which the engine is required to operate.

C

Basic requirements (cont'd)

Strict compliance may not be insisted upon throughout the range 0.1 positive "g" to 0.1 negative "g". The oil tank shall either, provide effective venting under conditions of negative "g", or it shall be strong enough to withstand the pressure consequent on interference with the venting.

13. Hydraulic resistance.- The hydraulic resistance of the system shall be kept to a minimum.

+ 14. Oil dilution.- An approved system of engine oil dilution, by means of fuel injection into the main oil feed pipe to the engine, shall be provided on all fighter, training and Fleet Air Arm aeroplanes.

15. On Bomber, Transport, and Coastal Command aeroplanes this system shall be designed such that partial installation can be effected during production, and completed at will by Service units. For this purpose,-

(i) operating switches shall be installed and wired as far as the fireproof bulkhead, and

(ii) the oil and fuel systems shall be provided with such bosses and connections as will be required to complete the system, such bosses and connections being fitted with suitable blanking flanges.

Design of tanks

16. Contents gauges.- Provision shall be made on all main engine oil tanks for the fitting of an approved contents gauge in accordance with S.I.S.2466.

17. Oil dilution.- To ensure efficient functioning of the oil dilution system the following points shall receive attention.

(i) A hotpot having a total capacity of at least 1½ gallons per 1,000 h.p. shall be incorporated in the tank. For engines of 1,000 h.p. and over, the diameter of the hotpot shall not be less than 6".

(ii) The hotpot shall be designed so that the different densities of the diluted and undiluted oil will not cause an exchange between the hotpot and the main body of the tank.

(iii) Care shall be taken to separate any entrained air from the oil before it is returned to the engine, and the tank shall be designed so as to assist this separation. The hotpot shall be freely vented to the main body of the tank to permit the escape of air and petrol vapour.

(iv) Care shall be taken in the design of the hotpot to prevent the formation of a vortex and some form of flow-straightener may be required.

18. Propeller operation.- When hydraulically controlled fully feathering propellers are used, the tank

+ From A.D.M.No.614

Design of tanks (cont'd)

shall be designed so that the additional quantity of oil (P) referred to in para.7, is trapped in the tank and is available for feathering the propeller should the bulk of the oil be lost by damage to the oil system or excessive consumption by the engine (see also Chapter 701). The quantity of oil so trapped shall not be less than the quantity recommended by the propeller manufacturer, and its delivery shall be so arranged that condensed moisture or sludge from the tank cannot be fed to the propeller: a stack pipe or a sludge trap in the pipe line are recommended to meet this requirement. Means shall also be provided to prevent the formation of a vortex at the outlet from the tank. A separate tank to carry this oil is acceptable only if it can automatically be maintained full of oil at a temperature approximately equal to that existing in the main tank.

19. Cleaning.- Handholes or cover plates shall be provided to permit easy inspection, cleaning, and repair of the interior of all tanks and their pipes or fittings. When baffles are fitted within the tanks the handholes or cover plates shall be arranged so that each section of the tank is readily accessible for cleaning.

20. Pipe fittings.- Tanks shall be arranged so that the torque used in screwing the piping on to the tank fitting is not taken by the tank itself but by a spanner used on the tank fitting.

21. Internal piping.- Internal piping within the tank shall be avoided as far as possible.

22. Protection of materials.- The tanks shall be designed from the outset so that they can be protected from corrosion by the methods specified in Chapter 801, and these methods of protection shall be applied.

Installation of tanks

(Para.23 deleted)

24. Location.- The location of each tank shall be such that the risk of fire due to oil from a defective tank or pipe spreading to inflammable parts of the complete aeroplane will be at a minimum (see Chapter 715).

25. Tanks shall not be installed inside the hulls of flying boats.

26. Tanks should be positioned so that there is a positive head at the pressure oil pump on the engine for all normal attitudes of the aeroplane, but if this is not possible the suction head shall be kept as small as is practicable. If, in the re-oiling attitude, there is no positive head at the pressure pump, easy priming of the pump shall be possible.

D

Installation of tanks (cont'd)

27. Mounting.- The tank shall be supported by a generous area of the aeroplane structureand shall be completely restrained from moving except to the extent which mountings, if flexible, are designed to allow. In practice it is usually most satisfactory to strap the tank on a cradle connected to the aeroplane. The tank mounting shall be so arranged that over-tightening of the straps, if used, does not cause distortion of, or other damage, to the tank shell.

28. Packing materials.- Only approved materials shall be used as packing between a tank and the metal straps or cradle supporting it. Felt or any other absorbent material will not be acceptable (see also Chap.801).

29. Auxiliary oil tanks.- Auxiliary oil tanks, when fitted, shall supply oil by gravity feed to the main tank through a pipe not more than 3 ft. in length and preferably of an outside diameter of not less than 2". The venting of the two tanks shall be arranged so that they are both at the same internal pressure. Provision shall also be made so that, in flight, the temperature of the auxiliary oil may be raised to and maintained at 5°C above its pour point (i.e. for D.T.D.472 Grade B a minimum temperature of -7.2°C) when the aeroplane is operating under the minimum temperature conditions called for in the Aeroplane Specification. Auxiliary tanks requiring pumps or the application of pressure for the transfer of oil are not acceptable.

Filling and draining of tanks

30. It shall be possible to fill and drain each tank easily and quickly at temperatures down to the minimum operating temperature called for in the Aeroplane Specification with the aeroplane in the normal attitude of rest. Hand or foot holds,if necessary, should be provided for the use of the mechanic whilst attending to these operations.

31. Filling.- Provision shall be made to enable each tank to be filled accurately to the required level without any possibility of the air space being filled with oil. Pet cocks shall only be used for indicating levels other than the highest, and shall have a bore of not less than ¾"; any pipe connected to such a cock outside the tank, shall have an outside diameter of not less than one inch and provision shall be made so that oil does not collect in it and congeal, thus preventing adequate flow at low temperatures. To prevent overfilling, the filler cap or neck shall be designed and situated so that the required air space is automatically left when the oil reaches the lower edge of the filler orifice. To prevent under-filling during rapid re-oiling, provision shall be made for quick levelling off between sections of the tank. When pressurised tanks are installed, there shall be free access from the filler neck to the air space in the tank, above the level of the lower edge of the filling orifice, so that an air lock cannot be formed. If

Filling and draining of tanks (cont'd)

necessary, special vent pipes shall be provided for this purpose.

32. Filler caps.- Filler caps shall be situated over the main body of the oil tank and not over the hotpot. Quick release caps shall be provided for filler necks which are made in light alloy or which, owing to their length, are relatively weak; standard AGS screw caps shall be provided in other cases. All filler caps shall embody a fully shrouded joint washer secured in position and shall be arranged to prevent the entry of accumulated dirt or moisture into the tank. They shall be capable of being removed and replaced without the use of a special tool. A means of automatically indicating the presence of internal pressure before the cap is completely removed shall be provided.

33. Dipstick.- A suitably graduated dipstick shall be provided with, and fitted into, each tank.

34. Draining.- A drain plug or cock of adequate size shall be fitted so that when the aeroplane is in the refuelling attitude, the contents of the tank, including the propeller feathering reserve, can be drained rapidly and completely, and so that dirt and sludge can be swilled out. The drain plug or cock shall have an effective area not less than that of a one inch bore pipe and any pipe connected to it shall be arranged so that the oil will not collect and congeal at low temperatures, thereby preventing rapid flow. Plugs, when used, shall be removable by standard spanners

35. The drain shall be arranged so that the draining operation may be performed in the open, in a high wind, without an appreciable quantity of oil being splashed over the aeroplane structure. Where necessary a length of fixed or detachable piping shall be provided to convey the oil to a point at which it can easily be collected.

36. Naval aeroplanes.- For Naval aeroplanes, de-oiling connections shall be provided. The SBAC type of valve should be fitted and a valve lifter on a short length of hose fitted in the aeroplane adjacent to the valve. Provision shall also be made to enable the contents of the tanks to be gauged both with the aeroplane at rest on the ground and in the launching attitude when a catapulted or accelerated take-off is a specification requirement.

Feathering pump

37. Installation.- The feathering pumps for hydraulically controlled fully feathering propellers shall be installed aft of the fireproof bulkhead in a position providing a positive head of oil between the tank and the pump inlet. The length of the pipe connecting the tank to the pump shall be as short as possible and provision shall be made to prevent freezing or congealing of the oil in this pipe under the lowest temperature

conditions at which the aeroplane is required to operate.

Pipes

38. Bore of pipes.- The bore of each pipe and its end connections shall not be less than that of the corresponding union on the engine and shall be such that under the low temperature conditions of Appendix 6.-

(i) the effective head at the pressure pump inlet does not fall below that specified in the Engine Data Sheets,

(ii) the pressure pump can maintain the full oil circulation,

39. Length of pipes.- The run of all pipes shall be kept as short as possible.

40. Draining of pipes.- Provision shall be made so that the easy and rapid draining of all pipe lines at all temperatures down to the minimum operating temperature called for in the Aeroplane Specification, may be possible.

41. Propeller governor and feathering pipes.- The size and safe working pressure of all pipes and couplings used with the propeller governor feathering pump and feathering equipment shall be in accordance with the recommendations of the propeller manufacturer.

42. Flexible tubing.- Flexible tubing or flexible jointing of an approved type shall be used between the engine and the airframe and at any other points where flexibility is required. Only flexible tubing approved for use with oil at the maximum temperature which can be reached in the aeroplane oil system shall be used.

43. Bending pipes.- Care should be taken to avoid installing suction pipes in the form of an inverted "U". Rigid pipes shall not be bent round a radius of less than four times the internal pipe diameter. The minimum radius for flexible tubing is laid down for each type of approved tube - See ADM.303.

44. Fastening pipes.- Pipes should be firmly clipped to the airframe at frequent intervals. Where there is likely to be relative movement between pipe and airframe approved packing should be used (see Chapter 801). Clips shall be such that they cannot damage, distort or constrict the pipes by overtightening.

45. Pipes in flying boats.- So far as possible no oil pipes should be installed in the hull of a flying boat. When this cannot be avoided such pipes shall be enclosed in an oil-tight duct which has an external vent.

Pipes (cont'd)

46. Fire precautions.- Pipes shall not be installed close to any components from which in the event of pipes leaking or breaking, fire might originate. Flexible and non-metallic connections forward of the engine bulkhead must be made fireproof in accordance with current practice.

47. Joints.- As few pipe joints as possible shall be used. Elbow and banjo fittings shall be avoided, particularly on the suction side of the pressure pump. Rigid joints shall be made with standard couplings, fitted in accordance with S.I.S.No.28.

48. Soft soldered joint fittings are not acceptable when on the engine side of the fireproof bulkhead, nor should they be used between the scavenge pump and the oil cooler.

49. The use of fibre jointing washers should be avoided as they tend to shrink when in contact with hot oil.

50. Wrong connections.- All pipes shall be arranged so that it will be mechanically impossible to connect them to the wrong unions.

Cocks

51. Shut-off cock.- When a cock is fitted between the tank and the pressure pump, arrangements must be made so that the engine cannot be started when the cock is in the "off" position. (A notice in the cockpit or a wired open cock will not be accepted as fulfilling this requirement).

52. Bore of cocks.- The equivalent area of the bore of each cock shall be not less than the internal cross sectional area of the pipe line in which it is fitted.

53. Cock controls.- Each cock control shall be of the two-way type. All such controls shall be designed for positive operation and shall be free from excessive back-lash. Any flexible type of control which has been specifically approved may be used. (see ADM.275).

54. The range of movement of each control shall be limited by means of positive stops coinciding with the "ON" and "OFF" settings of the cock and forming an integral part of the cock itself.

55. Oil cocks and controls shall be designed so that it will be impossible to fit a control out of phase with the corresponding cock.

56. Proper arrangements shall be made to prevent stresses being induced in pipes either by the weight of any cock fitted in the pipe line or by the force applied to the cock to operate it.

FS/44

Strainers

57. Suction strainer.- Each system shall incorporate a strainer, fitted either in the tank sump (this is preferred), or in the pipeline from the tank to the pressure pump. The design and arrangement of the strainer shall be such that:-

(i) it can readily be removed without draining the tank or causing excessive loss of oil, leaving sludge behind in the oilways, or allowing the sludge to fall into the sump, and

(ii) the pressure pump remains drowned when the strainer is removed, unless suitable arrangements are made for priming.

58. Each strainer shall be designed and fitted so that it will not collapse under suction, or suffer damage when being removed or replaced.

59. The strainer on the suction side of the pump shall be made from a suitable wire gauze and shall be of a size commensurate with the oil circulation rate of the engine. The gauze shall not be finer than 20 x 20 mesh of 28 swg wire.

Vents and vent pipes

60. Vents.- A vent shall be fitted to each oil tank. In the absence of a connection on the engine to which a vent pipe may be attached, arrangements shall be made to ensure that no oil will escape from the tanks with the aeroplane in any attitude within the limits defined in paragraph 11. The venting requirements of paras.61 - 63 inclusive shall be met with the aeroplane in the normal attitude of rest and also in the level flying attitude.

61. Vent pipes.- Vent pipes shall,-

(i) be connected to the highest point of the tank with the aeroplane at rest on the ground, in level flight and when mounted on the catapult or accelerator trolley. Where necessary, a splash guard should be fitted to minimise the escape of froth from the tank,

(ii) be situated so that the outlet from the tank is over the main body of the tank and not over the hotpot unless this prevents compliance with (i) above,

(iii) be so situated in the tank that oil cannot escape through them when the aeroplane is launched from a catapult or accelerator trolley,

(iv) be self draining and free of 'U' bends or other traps in which oil or moisture can collect,

(v) have an outside diameter of at least one inch in the case of engines of 1,000 h.p. and over.

Vents and vent pipes (cont'd)

62. Tank pressurising valves.- If a pressurising valve is fitted in the tank vent pipe, it shall,-

(i) be mounted at the highest point in the pipelines,

(ii) be so situated that its temperature is prevented from falling below a figure 5°C in excess of the pour point of the specified oil (i.e. for D.T.D.472 Grade B a minimum temperature of -7.2°C) under the minimum temperature conditions called for in the Aeroplane Specification.

(iii) be mounted in such an attitude that oil and moisture will drain away from it and will not be able to collect on either side. and

(iv) be of a design such that oil and moisture cannot collect in the valve itself.

63. Engine breather pipes.- The engine breather pipe outlets shall be located in a position relative to the slipstream such that unduly high pressures will not build up in the crankcase and be transmitted to the oil tank via the vent pipes. The outlet shall be situated so that any fumes from it will not contaminate the air in the cockpit and so that the risk of any discharged oil being ignited by the exhaust is at a minimum. The breather pipe shall have a continuous slope from the engine to the atmospheric outlet, without any pockets or traps in which oil or moisture can collect, freeze and choke the pipe. The outlet shall be designed to minimise the possibility of its being blocked by ice accretion or by congealing of the oil.

Pressure gauges

64. Engine.- Each system shall incorporate a transmitting gauge of an approved type to indicate the pressure of the oil in the main pressure system of the engine. The gauge shall be fitted either in the pilot's cockpit, or, if an engineer's station is provided, at that station.

65. Oil cooler.- An inlet and an outlet pipe each having a pressure gauge connection shall be designed for each oil cooler and a sufficient quantity of these shall be provided to equip all aeroplanes undergoing flight trials as required by the Aeroplane Specification.

Thermometers

66. Each system shall include provision for an approved oil thermometer, having a suitable range, to be fitted in the pipe line between the tank outlet and the pressure pump inlet unless suitable provision has been made on the engine. Any proposed method of fitment other than in a standard A.G.S.

Thermometers (cont'd)

thermometer pocket shall have the prior concurrence of the D.T.D.(RDI).

67. Provision for additional thermometers shall be made,-

(i) in the pipe line between the engine outlet and the inlet of the cooling device, and

(ii) in the pipe between the oil cooler and the tank,

on any experimental or production aeroplane being sent to an Experimental Establishment for tests of the installation. Such provision shall consist of standard AGS or other approved types of oil thermometer pockets. Pockets brazed or otherwise affixed to the sides of pipes are not acceptable.

68. Visibility.- The scale of each thermometer shall be clearly visible to the pilot or, if specially sanctioned, to another member of the crew.

Tests

69. Rig tests.- Prior to acceptance of the prototype installation a full scale rig shall be provided for such tests as are agreed on between the Contractor and the D.T.D. (RDI) and additionally, tests shall be made to ensure that the scavenge pressure under the conditions of para.10 will not endanger the system.

70. Tank pressure tests.- The first of a new design of metal tank shall be subjected to a test pressure of

$$1.5 \times [(0.75n_1 \text{ times the static head}) \text{ plus the superimposed pressure to be used at 25,000 ft.})]$$

where n_1 is the maximum normal acceleration coefficient. The test pressure shall be maintained for 20 minutes. Under this test there shall be,-

(i) no leakage, and
(ii) no permanent distortion which would render the tank unserviceable.

71. During the test the tank shall be at an attitude corresponding to its position in the aeroplane, when the aeroplane datum line is horizontal. The tank should be supported in a representative manner, but since the test is severe on the top of the tank some additional support for the top is acceptable. Details of the support shall be given on the tank drawings. The test shall be carried out before the self-sealing covering has been applied, but should any fittings be removed during covering the tank shall be re-tested.

Tests (cont'd)

72. The static head shall be considered as the vertical distance which will pertain (when the tank is installed in the aeroplane and the aeroplane datum line is horizontal) between the highest level of any fuel in intimate contact with the fuel in the tank and the lowest point of the tank.

73. No rejected tank may be altered and re-submitted without the permission of the Inspector-in-Charge, A.I.D. Approved joint sealing compounds may be used during the construction of a tank but shall not be used for stopping leaks in a complete tank.

74. The test pressure for production tanks shall be two-thirds of the test pressure for prototype tanks and the tank drawings shall quote both of these test pressures.

75. Stainless steel pipes.- When stainless steel pipes are used they shall be tested to an internal air pressure of 100 lb. per sq.in. without sign of leakage when immersed in water.

H

RELEVANT M.O.S. PUBLICATIONS

Specifications

No. D.T.D.1081 - Felt/Canvas covering for oil tanks
No. D.E.D.2010 - Specification and schedule of tests for oil coolers

Aircraft Design Memoranda

No. 477 - Flexible tubing for fuel and oil systems of airframes

Standardisation Design Memoranda

No. 56 - Oil dilution valve filters

R.A.E. Technical Notes

No.Eng.355 - General review of oil systems for power plant units

May, 1943
Issued with A.L.No.20

CHAPTER 705

ENGINE LIQUID COOLING SYSTEMS

Note:- The subject matter of this Chapter was previously contained in A.D.M. 504, Specification D.T.D.1028 and Chapter 701. New requirements are included from J.A.C.Paper No. 186.

CHAPTER 705

ENGINE LIQUID COOLING SYSTEMS

1. General

1.1 Each engine shall be provided with a separate and independent cooling system which shall be designed and installed to provide adequate cooling under the conditions required by the Aeroplane Specification.

1.2 When aerobatic manoeuvres, including inverted flying, are specified, the coolant system shall be arranged so that inversion will not have any adverse effect upon its functioning when the aeroplane returns to normal flight, and will not result in any appreciable loss of coolant.

2. Temperature control

2.1 Means of regulating the temperature of the coolant shall be provided to prevent both excessively high and excessively low temperatures. The low temperature control shall be automatic in operation and automatic control of high temperatures is preferred. Automatic temperature controls shall be designed to return to a safe position in the event of their failure to operate.

3. Venting

3.1 The venting requirements of para.3.2 shall be met when filling the system whilst the aeroplane is in the tail down attitude and additionally, in the case of seaplanes and types for catapulting, these requirements shall be met in the tail up attitude.

3.2 Wherever possible the system should be self-venting but the use of plugs or cocks for this purpose is allowable. All points at which air can collect when the system is being filled shall be suitably vented, preferably by a permanent vent to a point in the system which will allow the air to rise to the air space in the header tank, or by the provision of a plug or cock venting to atmosphere. All venting points shall be readily accessible and plugs shall be suitable for standard spanners.

4. Draining

4.1 Drain plugs or cocks shall be fitted in each cooling system in an easily accessible position. The drains shall permit complete draining of the system to be effective in not more than 5 minutes with the aeroplane in the attitude required for venting in para.3.1.

4.2 Drain plugs shall be suitable for standard spanners and drain cocks shall not be greater than ½". Drainage points shall be so positioned that the escaping fluid will not foul the adjacent structure.

5. Header tank

5.1 The header tank shall be flexibly mounted and shall be relieved of all strains due to other accessories and connections.

6. Pressure gauge

6.1 A pressure gauge connection shall be provided to enable the pressure in the header tanks to be registered. For pressure cooled systems the pressure (at any height) of the coolant in the coolant header tank shall not exceed the maximum pressure at that height allowed by the Engine Operational Limitations.

7. Radiator

7.1 Protection

7.1.1 On single-engine aeroplanes, a device shall be incorporated to ensure that in the event of a single strike in the radiator at least sufficient coolant will be retained in circulation to enable the aeroplane to continue in straight and level flight.

7.2 Design

7.2.1 The radiator shall comply with the requirements of Specification No.D.E.D.2008.

7.3 Mounting

7.3.1 The radiators shall be flexibly mounted to reduce risk of damage due to vibration or inertia loads and the mounting shall be such that the weight of cowlings is not carried by the radiator matrix.

7.4 Shutter control

7.4.1 Unless the shutters are automatically operated a separate cockpit control shall be fitted for the shutters on each engine and, if annotated, shall be labelled "radiator". The markings on the control shall be in accordance with the requirements of Chapter 103. The controls shall be for the use of the member of the crew responsible for reading the coolant thermometers.

8. Piping

8.1 Pipes and branches for hose connections shall have their ends beaded and well rounded to prevent cutting of the hose, and shall be reinforced to prevent distortion by hose clips. All copper and copper alloy pipes shall be in the fully softened condition. Pipes shall be supported to prevent vibration and relieve hose joints of any appreciable loads. Drain pipes shall be supported to prevent distortion when operating drain flaps or cocks. Approved types of hose connections or clips shall be used for making pipe joints.

9. Thermometers

9.1 A thermometer for measuring the outlet temperature of the coolant from each engine shall be permanently installed. The thermometer bulb shall be completely immersed and shall point against the direction of the flow, when fitted in a pipe.

10. Flowmeters

10.1 Provision shall be made for the fitment of Venturi flowmeters to measure the coolant flow.

11. Filler cap

11.1 An approved filler cap in accordance with S.D.M. No.64 shall be fitted. A means of automatically indicating the presence of internal pressure before the cap is completely removed shall be provided.

12. Strength

12.1 General

12.1.1 The following requirements are applicable to all pipes, pipe couplings, and components forming part of an engine cooling pressure system (except the engine which is accepted on the basis of the type test). The requirements are defined in terms of the maximum working pressure which is the pressure at which the relief valve is set to operate in accordance with the engine manufacturer's requirements.

12.2 Proof pressure

12.2.1 The items specified in para.12.1 shall be designed to withstand, without distortion or leakage, a proof pressure of not less than 1.25 times the maximum working pressure.

13. Pressure tests

13.1 Each cooling system shall withstand on test a pressure of 10 lb. per square inch or the maximum working pressure whichever is the greater. This test shall be made on the complete system, including the engine jacket and all auxiliary radiators used for heating purposes. The removal or blanking off of any item shall only be allowable if such action is necessary to ensure satisfactory testing of the remainder of the system.

C

RELEVANT M.A.P. PUBLICATIONS

Specifications

No. D.E.D. 2008 - Specification and schedule of tests for radiators for liquid cooled engines

Aircraft Design Memoranda

No. 500/24 - Standardisation of thermostatic header tank relief valves

Standardisation Design Memoranda

No. 64 - Filler caps for coolant header tanks

CHAPTER 707

HYDRAULIC INSTALLATIONS

A

CHAPTER 707

HYDRAULIC INSTALLATIONS

Introduction

1. This chapter specifies the design requirements for hydraulic systems and in particular standardisation requirements in respect of such designs.

2. The "main" hydraulic system is defined as the system by which various services, such as movement of flaps, undercarriage and bomb doors, are operated from a common hydraulic supply. Unless otherwise stated, the requirements in this chapter apply to the "main" system only. The "auxiliary" hydraulic systems are defined as those systems, independent of the "main" hydraulic system, by which such services as gun turrets and throttle controls are operated. Both "main" and "auxiliary" hydraulic systems shall be fully suitable for use with the standard hydraulic fluid(s) listed in S.D.M.No.11.

Inflation pressures

3. All oleo shock absorbers and components of hydraulic systems which need recharging from an external supply of compressed air, shall be such that an air pressure of 1800 lb/sq.in. or less is adequate for recharging when the aeroplane is supported on its wheels at the maximum design take-off weight.

Pumps

4. Pressure.- Any pump supplying fluid to the system shall incorporate, or work in conjunction with, an automatic device so designed that the maximum pressure set up by the pump during, or on completion of, any operation is not more than 2,500 lb/sq.in. and not less than 2,000 lb/sq.in.

5. Output.- The output from the pumps at a delivery pressure of 2,000 lb/sq.in. shall be sufficient to enable all mechanisms served to satisfy their respective operating requirements and the mechanisms shall be arranged for operation at this pressure.

6. Location.- If on twin-engined aeroplanes only one engine-driven hydraulic pump is employed, it should be fitted to the engine giving the inferior single engined performance. (Usually the starboard engine when right-hand propellers are fitted and the port engine when left-hand propellers are fitted.)

Pressure limiting device

7. Provision shall be made for preventing the pressure in any pipe line or component from exceeding 3,000 lb/sq.in. The pressure regulating device referred to in para.4 may be regarded as the means of preventing the pump from causing excessive pressure, provided that its suitability is proved to

RELEVANT M.A.P. PUBLICATIONS

Standardisation Design Memoranda

No.11 - Standard hydraulic fluids
No.18 - Charging valves Air and Hydraulic
No.39 - Hydraulic auxiliary hand pumps
No.41 - Vokes type oil filters for hydraulic systems
No.54 - Non-return valves for hydraulic systems

Scientific and Technical Memoranda

No.C2/42 - Comparison between mineral and vegetable fluids for use in aircraft hydraulic systems

CHAPTER 709

ELECTRICAL INSTALLATIONS

Note:- This chapter has been completely revised following J.A.C. Paper No. 298.

A

CONTENTS

	Para.
Introduction	1
Nature of power supply	2
Metal aeroplanes	2.7
Wooden aeroplanes	2.8
Bonding and earth strips	2.9
Main supply feeders	3
Circuit protection	4
Circuits	5
Circuit diagrams	5.1
Circuit connections	5.2
Circuit control	5.3
Bomb release circuits	5.4
Additional circuits	5.5
Circuit breaks	5.6
Cables	6
Approved types	6.1
Conduits	6.2
Installations	6.3
Interference prevention	6.4
Trailing cables	6.5
Connections	6.6
Power plants	7
Fire resistance cables	7.2
Fusing of engine electrical services	7.3
Electrical equipment	8
Accessibility	8.1
Positioning	8.2
Associated equipment	8.3
Accumulators	9
Turret installation	10
Vulnerability to enemy action	11
Protection from moisture	12
Cables	12.1
Cable conduits	12.2
Wiring components	12.3
Apparatus	12.4
Fire precautions	13
Cooling of apparatus	14
Generator	14.1
Regulator	14.2
Identification of circuits	15
Insulation resistance tests	16
Low voltage system	16.1
Medium voltage system	16.2

CHAPTER 709

ELECTRICAL INSTALLATIONS

1. Introduction

1.1 This chapter states the requirements applicable to the installation of electrical wiring, apparatus and components in aeroplanes.

2. Nature of power supply

2.1 Application shall be made to D.Inst.R.D. at an early stage in the design for approval regarding the power supply system proposed.

2.2 The system shall be one of the following.-

(i) D.C.

Direct Current, generated by 30 volt D.C. generators and such that the line voltage does not exceed 29 volts. This shall be termed a Low Voltage system.

(ii) A.C.

Alternating Current generated by 208 volt 3 phase 400 cps, star connected alternators. The neutral point of the alternators shall be brought out and solidly connected to the earth system. This shall be termed a 200 volt system.

2.3 The A.C. power supply system may be of,-

(i) varying voltage and frequency,

(ii) constant voltage and frequency,

(iii) constant voltage, varying frequency.

2.4 If either 2.3(i) or 2.3(ii) are adopted the following secondary supplies shall be made available,-

(i) 115 volt 3 phase 400 cps,

(ii) 115 volt 1 phase 1600 cps,

(iii) 29 volt (max.) 1 phase 400 cps,

(iv) 26 volt (max.) D.C. (for control purposes).

B

2.5 When 2.3(iii) is employed the A.C. may be rectified to form a D.C. system, in which case the line voltage and limits shall conform to the standard D.C. requirements.

2.6 Single pole wiring shall be used on all aeroplane electrical systems having a voltage not exceeding 29 volts.

2.7 Metal aeroplanes

2.7.1 Circuits employing single pole wiring on aeroplanes of metal construction may use the airframe as the negative path for the current, in which case the airframe shall be rendered capable of carrying the full electrical load of the aeroplane between any points on its structure.

2.8 Wooden aeroplanes.

2.8.1 Circuits employing single pole wiring on aeroplanes of wooden construction shall use a suitable negative path for the current in the form of earthing strips capable of carrying the full electrical load of the connected equipment. The use of stranded cable or multi-core cable using one core as the return, is an acceptable means of connection to the earthing strips.

2.9 Bonding and earth strips.

2.9.1 Strips fitted in accordance with Chapter 711 may be used to meet the requirements of paras.2.7 and 2.8 provided they are of sufficient cross sectional area to carry the full electrical load likely to be imposed on them.

3. Main supply feeders

3.1 A radial feeder to each distribution point, or dual feeders may be used. The feeder system and its protection against overload shall have the prior concurrence of D.Inst.R.D.

3.2 No single feeder shall supply more than 16 protected circuits.

3.3 The D.G.T.D. will indicate when dual supply for vital services shall be provided.

4. Circuit protection

4.1 Requirements for the protection of circuits shall be met by the use of suitable fuses or, when approved by D.Inst.R.D., circuit breakers.

4.2 Each circuit, with the exception of the generator, starter motor, and hydromatic feathering motor circuit shall be separately protected at the source of supply. Groups of circuits of the same nature may be protected by a single device provided that a fault on one circuit will not seriously inconvenience the crew or affect the safety of the aeroplane.

4.3 The protective devices shall be disposed in the fuselage in groups and shall be located in the section of the aeroplane where either,-

(i) the current consuming device is situated, or

(ii) the controlling equipment is situated.

Protective devices shall be easily accessible and shall be installed as near the source of supply as possible.

4.4 When the installation necessitates all or the majority of the protective devices being located in one compartment of the aeroplane, they should, unless protected by armour plating, be split into at least two separate groups, with the maximum available space being provided between the groups. Groups of protective devices on each side of the fuselage are preferred, each group having its own feeder cable. In addition the circuits in each group should be arranged to give the greatest degree of safety should one become damaged.

4.5 200 volt A.C. circuits shall be protected in each phase. 115 volt 3 phase 400 cps circuits shall be protected in 2 phases only.

5. Circuits

5.1 Circuit diagrams

5.1.1 Circuit diagrams shall be generally in accordance with the relevant S.I.S. for each circuit.

5.2 Circuit connections

5.2.1 Distribution or junction boxes are acceptable as a means of grouping circuit connections and shall conform to the requirements of R.A.E. Memo. No. E.L.482.

5.3 Circuit control

5.3.1 Switches in D.C. circuits shall be connected in the positive lead except where the S.I.S. authorises otherwise.

C

5.3.2 Switching for A.C. circuits shall be as follows,-

(i)	200 volt 3 phase	-	3 pole (normally)
(ii)	200 volt 1 phase) 115 volt 3 phase)	-	2 pole
(iii)	29 volt 1 phase	-	1 pole

5.4 Bomb release circuits

5.4.1 When the aeroplane is designed for the carriage of S.C.I. or S.B.C. the jettisoning circuits for the containers shall be separate from the firing circuits.

5.5 Additional circuits

5.5.1 Provision shall be made for sufficient spare protected circuits to allow an addition of 20% when the production stage is reached (see also para. 6.2.3). Ample spare terminals shall be provided at distribution or junction points.

5.6 Circuit breaks

5.6.1 Approved plugs and sockets of single ended or double ended type as appropriate (except as otherwise provided in para. 5.6.2) shall be provided to permit easy and certain making and breaking of electrical circuits to be effected at the following points,-

(i) wing breaks,

(ii) removable panels (including the pilot's dashboard) carrying electrical equipment,

(iii) walls of pressure cabins,

(iv) power plant bulkheads, and

(v) transport breaks provided to meet the requirements of Chapter 802.

Heavy duty cables, above 64 amps. capacity, may employ an approved connector at the above locations in lieu of plugs and sockets.

5.6.2 Quick release connectors of approved type may be used in lieu of plugs and sockets at the breaks enumerated in para.5.6.1 (other than power plant bulkheads). The decision to use such method of connection is subject to the concurrence of D.G.T.D. and the deciding factors will be the number of cable

cores passing through the breaks, the position of the associated quick release connectors, and the space available.

6. Cables

6.1 Approved types

6.1.1 Approved cables for use in electrical installations are given in S.D.M.15 and the type of cable used for any circuit shall comply with the requirements of the relevant S.I.S.

6.2 Conduits

6.2.1 Protection of cables from damage may be provided by running them in tubes or ducts of approved material, and covers, when fitted, shall be detachable and/or hinged.

6.2.2 All tubes and ducts carrying electrical cables shall be adequately flared or bushed with insulating material at the points of exit of the cable. Precautions shall be taken to avoid the risk of damage to the cables when being drawn into the tubes.

6.2.3 Sufficient capacity shall be provided in tubes or ducts to allow any cable to be withdrawn and to allow reasonable additions to the number of cables accommodated.

6.3 Installation

6.3.1 For D.C. systems when multicore cables having colour identification on the dielectric of the cores are used, the red core should, in so far as possible, be employed for the positive lead.

6.3.2 For A.C. systems colour identification of the cable cores shall be in accordance with B.S.S.No.7 and also to the additional instructions of D.Inst.R.D.

6.3.3 When two or more cables connect to an item of equipment which has no adjacent earth, e.g. control switches, the cables shall be kept as close to each other as possible.

6.3.4 All sections of cable shall be readily removable for repair or replacement.

6.3.5 Separate cables, ducts, or conduits shall be used for the following services,-

(i) radio,

(ii) speech inter-communication,

D

(iii) ignition, (L.T. supply to booster coil excepted)

and, so far as possible,

(iv) general (lighting, heating and power), and

(v) bomb releasing and bomb fuzing.

When distribution or junction boxes are employed, separate boxes shall, whenever possible, be used for each of the above services.

6.3.6 Cables in the fuselage shall be installed so as to avoid the risk of damage or maltreatment by the crew in the ordinary course of their duties. Cables shall be capable of easy separation for maintenance purposes. When a length of cable connecting to equipment cannot be completely protected from damage, an intermediate break shall be provided to avoid the necessity for disturbing the connections in a main junction box when replacement is necessary.

6.3.7 Cables in covered aerofoil components shall be carried in tubes to protect them from damage. The tubes when installed shall permit easy replacement of defective cables, without opening up the component.

6.3.8 On aeroplanes with folding wings, the cables shall be suitably protected from damage where they pass over the hinged joints. The wings shall be able to fold without the disconnection of the cables being necessary.

6.4 Interference prevention

6.4.1 Any general service wiring or unscreened wiring shall be installed not less than a distance of 18" from the wireless aerial lead in.

6.4.2 When plain H.T. cable is used between engine starter magnetos or booster coils, and the isolating spark gap, it should be installed not less than 3" from metal braided cables, pipe lines, or similar metal parts to avoid "corona" effects and high electric stress in the cable during engine starting.

6.5 Trailing cables

6.5.1 Adequate cable lengths shall be provided to allow full movement of all moving electrical apparatus and the cable shall be suitably run and supported to prevent damage.

6.6 Connections

6.6.1 All connections shall be made by the use of approved terminal blocks, plugs and sockets, or connectors located in a position easily accessible for maintenance purposes.

6.6.2 Terminals, reached through an inspection door, shall face outwards to provide ease of manipulation. Plug and socket connections reached through access doors shall be positioned to allow easy disconnection. Sufficient length of cables shall be provided to allow the loose member to reach the door opening.

6.6.3 On metal aeroplanes when copper or brass earthing connections are made to the airframe, easily replaceable aluminium washers shall be interposed between the cable lug and airframe. The terminal assembly shall then be treated with blue paint to Specification No.D.T.D.62 to exclude moisture.

6.6.4 The lengths of cables attached to terminal blocks shall be approximately 2" greater than necessary, to allow re-making of connections. The excess lengths shall be secured to prevent vibration.

6.6.5 Solderless connections of an approved type are preferred. When soldering lugs are used the cable shall be supported near the joint to prevent vibration.

6.6.6 Approved resin fluxes only shall be used for soldering cables.

7. Power plants

7.1 Plugs and sockets not exceeding 12 ways and of a specially approved type incorporating weatherproofed steel shells and solderless "crimped" connections, shall be used at all fireproof bulkheads or secondary frame breaks and such plugs shall also be used on all apparatus requiring plug and socket connections in the power plant, on the fireproof bulkhead, or within 4" of the airframe side of the fireproof bulkhead.

7.2 Fire resistant cables

7.2.1 (i) Forward of the bulkhead
Electrical cables on the power plant side of the fireproof bulkhead which affect essential services (see Chapter 715) shall be chosen from the following approved fire resistant types.

E

Duflamet 4 - Stores Ref. 5E/2510
Duflamet 7 - Stores Ref. 5E/2547
Uniflamet 7 - Stores Ref. 5E/2548
Uniflamet 12 - Stores Ref. 5E/2549

(ii) Aft of the bulkhead
Essential services leaving the airframe side of the fireproof bulkhead shall be wired with either "Flamet" cable or other approved cable covered with glass silk sleeving and run in conduits. Where approved cable other than "Flamet" type is used, each core shall be protected with glass silk sleeving applied over the rubber dielectric for a minimum distance of 4" clear of the fireproof bulkhead. The glass silk must abut the end of the plug or socket pin and must be secured by an insulating sleeve embracing both the glass silk and the plug or socket pin.

7.2.2 All cables to the fireproof bulkhead shall be moisture proofed by the application of an approved protective treatment.

7.2.3 Current consuming devices forward of the fireproof bulkhead shall be earthed aft of the bulkhead.

7.2.4 Heavy duty leads may pass through the bulkhead by means of a split fairlead provided that the requirements of Chapter 715 are met.

7.3 Fusing of engine electrical services

7.3.1 The fusing of the electrical services of multi-engined aeroplanes shall be arranged in such a manner that in the event of a fire at one engine the functioning of circuits at other engines will not be jeopardised (see R.A.E. Memo No.E.L.1063).

8. Electrical equipment

8.1 Accessibility

8.1.1 All items of electrical equipment shall be installed in a manner affording easy accessibility for the inspection, renewal and maintenance of the equipment and of the cable runs and connections.

8.2 Positioning

8.2.1 All items of electrical wiring, apparatus

and components shall be installed in a position which will satisfy the requirements of Chapter 717.

8.3 Associated equipment

8.3.1 Items of associated equipment shall be grouped together wherever possible.

9. Accumulators

9.1 An approved master switch shall be installed in an approved manner in the accumulator circuit and shall be accessible in flight.

9.2 All accumulators shall be fitted in such a position that their fitting to, or removal from the mounting can be performed without difficulty in a reasonably short time and they shall be provided with an acid resisting tray having a raised edge of at least ½" to collect spilt acid.

9.3 Accumulators shall not be fitted in engine nacelles.

9.4 On aeroplanes where assisted take-off may be used, the accumulators shall be mounted lengthwise in the line of flight.

9.5 A dummy stowage terminal block of an approved type shall be installed and shall be such that the accumulator cables may be safely connected to it when the accumulator is not in position.

9.6 Consideration shall be given, on high altitude aeroplanes, to the necessity for keeping accumulators up to a temperature at which they will operate satisfactorily.

9.7 Reference should be made to Chapter 801 for details of special protective treatment necessary in the vicinity of accumulators.

10. Turret installation

10.1 The installation of electrical wiring and apparatus in turrets shall conform to the requirements of the aeroplane as a whole. The current consuming devices in the turret shall be earthed outside the turret.

11. Vulnerability to enemy action

11.1 Provision must be made to render the electrical services as invulnerable as possible to enemy action.

F

11.2 The wiring form of a panel should if possible be so arranged that the cables leave the panel in at least two groups spaced apart. Where a large number of conductors are attached to a panel, they should be grouped as far as possible so that the cables take a natural and orderly course to the associated apparatus.

11.3 The wiring should if possible be arranged so that the cables,-

(i) lie flat one under another,

(ii) are in two or more groups with a reasonable space between them, or

(iii) are divided on each side of the fuselage.

12. Protection from moisture

12.1 Cables

12.1.1 Care shall be taken to avoid the risk of damage to cables by liquids such as oil, petrol or water.

12.1.2 Cables connecting to equipment should, whenever possible, be arranged to run downwards from the item of equipment, but if this is not possible the cable run shall incorporate a downward loop immediately before entering the apparatus.

12.2 Cable conduits

12.2.1 Cable conduits shall be arranged so that any condensed moisture in them, will drain away and adequate drain holes shall be provided, if necessary.

12.3 Wiring components

12.3.1 Fuseholders, terminal blocks and connectors on float seaplanes, flying boats, amphibians, and all naval aeroplanes, shall be protected or enclosed so as to exclude the entry of water.

12.4 Apparatus

12.4.1 All electrical apparatus including electrical panels, distribution boxes, junction boxes, switch gear, cable assemblies etc. shall be installed so that oil, petrol, or water cannot reach the connections.

12.4.2 When apparatus is exposed, and it is possible for water to impinge on it during any

condition of flight, a protecting shield shall be provided and the apparatus shall be suitably weather-proofed.

13. Fire precautions

13.1 Precautions shall be taken in the installation of electrical apparatus to ensure freedom from risk of fire or explosion. In particular, electrical equipment having moving contacts, and installed on the engine side of the fireproof bulkhead, or in the same enclosure as fuel tanks or fuel pumps, shall be of a type which has passed the flame-proofness tests of R.A.E. Memo No.E.L.482.

13.2 Cables shall be routed to minimise the risk of a short circuit igniting inflammable vapour. In particular cables shall not be clipped to pipes carrying inflammable liquids and if passing through the fire-proof bulkhead shall be sited as remotely as possible from such pipe lines.

14. Cooling of apparatus

14.1 Generator

14.1.1 Strict compliance with Chapter 701 for generator cooling shall be maintained.

14.2 Regulator

14.2.1 The regulator shall be mounted so that its adequate cooling is ensured.

15. Identification of circuits

15.1 To facilitate the checking of cable runs and the testing of apparatus and circuits, suitable identification of cable runs, cable connectors, and apparatus terminals shall be provided; the means employed shall be such that the identification remains easily visible.

15.2 At junction and distribution points medium voltage and low voltage sections shall be adequately separated. Sections carrying medium voltages shall be clearly marked with the voltage.

15.3 Ignition circuit cables, other than engine or power unit cables, shall be marked in accordance with the lettering given below, either by engraving on the nearest bonding clamp appropriate to the leads, or by the use of approved identification sleeves.

Magneto switch (earthing switch)	M.S.
Magneto C.B. earthing terminal	C.B.
Starting magneto switch	S.M.S.
Starting magneto C.B. earthing terminal	S.C.B.

G

Booster coil H.T. terminal (H.T. type only)	S.D.
Starting magneto H.T. terminal	S.D.
Engine magneto H.T. starting terminal	S.T.
L.T. booster coil output terminal	B.C.O.

15.4 On twin-engined aeroplanes, additional suffix letters shall be added as follows,-

"P" for port engine
"S" for starboard engine.

15.5 On four-engined aeroplanes,-

"P.O." for port outer engine
"P.I." for port inner engine
"S.O." for starboard outer engine
"S.I." for starboard inner engine.

Individual leads shall be identified by the appropriate equipment terminal number.

16. Insulation resistance tests

16.1 Low voltage system

16.1.1 Tests on 29 volt A.C. and D.C. installations shall be conducted in accordance with R.A.E. Memo No.E.L.1027.

16.2 Medium voltage system

16.2.1 Tests on medium voltage installations shall be made at 500 volts D.C. unless otherwise specified for particular circuits or apparatus. Wiring shall be tested with all apparatus disconnected. Switches shall be tested with the wiring, but rectifiers shall be disconnected. The following minimum figures shall be obtained,-

(i) 5 megohms between all phases and earth, and

(ii) 10 megohms between each pair of phases i.e. 3 separate tests.

RELEVANT M.O.S. PUBLICATIONS

Specifications

No. D.T.D. 1080 - Electric remote throttle controls for aircraft engines
No. D.T.D. 1085 - Climatic testing of airborne instruments and equipment
No. D.T.D. 2001 - Design requirements and schedule of type and 'series' tests for aero engine ignition apparatus
No. D.T.D. 2002 - Design requirements and schedule of tests for aero engine ignition cable
No. E.L.895 - Weather resistance of electrical equipment for aeroplanes

Aircraft Design Memoranda

No. 500/6 - Standardisation of electrical measuring instruments

No. 500/20 - Standardisation of accumulators
No. 500/23 - Standardisation of warning lamps
No. 500/26 - Standardisation of rotary transformers
No. 500/31 - Standardisation of electrical A.G.S. parts
No. 540 - Ignition starting systems

Standardisation Design Memoranda

No. 9 - Direct current motors for aircraft
No.12 - Electric switches for aircraft
No.15 - Electric cables
No.16 - Electrical plugs and sockets
No.17 - Warning horns
No.19 - Dry cells - Dry batteries
No.38 - Filament lamps (including electrical discharge lamps)
No.47 - Undercarriage position indicators for aircraft (excluding amphibians)
No.50 - Suppressors - Radio interference
No.51 - Relays
No.65 - Electric hand lamps, hand torches and special battery lamps

RELEVANT M.O.S. PUBLICATIONS (CONT'D)

R.A.E. Reports

No. Memo. E.L.482	-	Design and construction of electrical equipment
No. Memo. E.L.858	-	Negative earth return systems
No. Memo. E.L.1027	-	Testing of earth return aircraft wiring systems
No. E.L.1206	-	Compass interference from electrical components
No. E.L.1289	-	Compass interference on American aircraft

Loop aerials (cont'd)

directional settings of the loop, both in the most adverse iced-up condition likely to occur and in the ice-free condition.-

(i) A factor of not less than 2.0 at the maximum equivalent airspeed in level flight.

(ii) A factor of not less than 1.5 at the design diving speed.

18. For loop aerials in streamline fairings (see fig.3), the complete unit, whilst in the most adverse iced-up condition likely to occur as well as in the ice-free condition, should conform to the following requirements.-

(i) A factor of not less than 2.0 at the maximum equivalent airspeed in level flight with the aeroplane yawed at an angle of 15°.

(ii) A factor of not less than 1.5 at the design diving speed with the aeroplane yawed at an angle of 5°.

19. As an additional requirement, the main stressing requirements for the aeroplane as a whole are also applicable to both open and faired loop aerials, but only when in the ice-free condition.

20. It is recommended that, unless there is reliable evidence to indicate that they are unreasonably severe, the loading cases given in the following paragraphs should be taken as the minimum requirements. The cases are based on the conditions at maximum equivalent airspeed in level flight, but are also intended to cover diving conditions as envisaged in the requirements given in paras.17 and 18.

21. For open ring loop aerials, the structure shall have a factor of at least 2.0 for all angular positions of the loop aerial, under a force R acting parallel to the directional axis of the loop aerial (see fig.4). To ensure adequate torsional strength of the supporting mast, the applied force shall be assumed to act at a point on the horizontal diameter situated half the outside radius from the centre. The value of R is given by the equation.-

$$R = 2.4 \times \tfrac{1}{2}\rho_o V^2 S'$$

Where

ρ_o... slugs/cu.ft. ... = air density at ground level (0.002378)

V ..... ft/sec. ..... = maximum equivalent airspeed in level flight.

C

S^1..... sq.ft. ..... = net area of the loop aerial in the plane at right angles to the directional axis.

22. For loop aerials in streamline fairings, the structure is to have a factor of at least 2.0 under a backward force P acting along the longitudinal axis of the fairing and a lateral force Q acting perpendicularly to this axis. Two extreme positions of the force Q are to be covered, one 0.5 times the length of the fairing in front of the nose and the other the same distance behind the nose (see fig.5). The values of P and Q are given by the equation.-

$$P = Q = 0{\cdot}70 \times \tfrac{1}{2}\rho_o V^2 S''$$

Where

S''..... sq./ft. ..... = maximum cross sectional area of the fairing in a plane perpendicular to its longitudinal axis.

23. The dimensions given in paras.21 and 22 refer to the installation with no ice accretion, but the loads are intended to cover the effects of ice accretion. When de-icing equipment is fitted, the effect of this on design loads should be ignored.

24. The loads given in paras.21 and 22 do not include the drag of the supporting mast which should be treated as an aerial mast. The effect of any appendages, external wires etc., should also be taken into account. It should be noted that lack of stiffness may lead to structural failure and a high degree of torsional stiffness of the supporting mast is recommended.

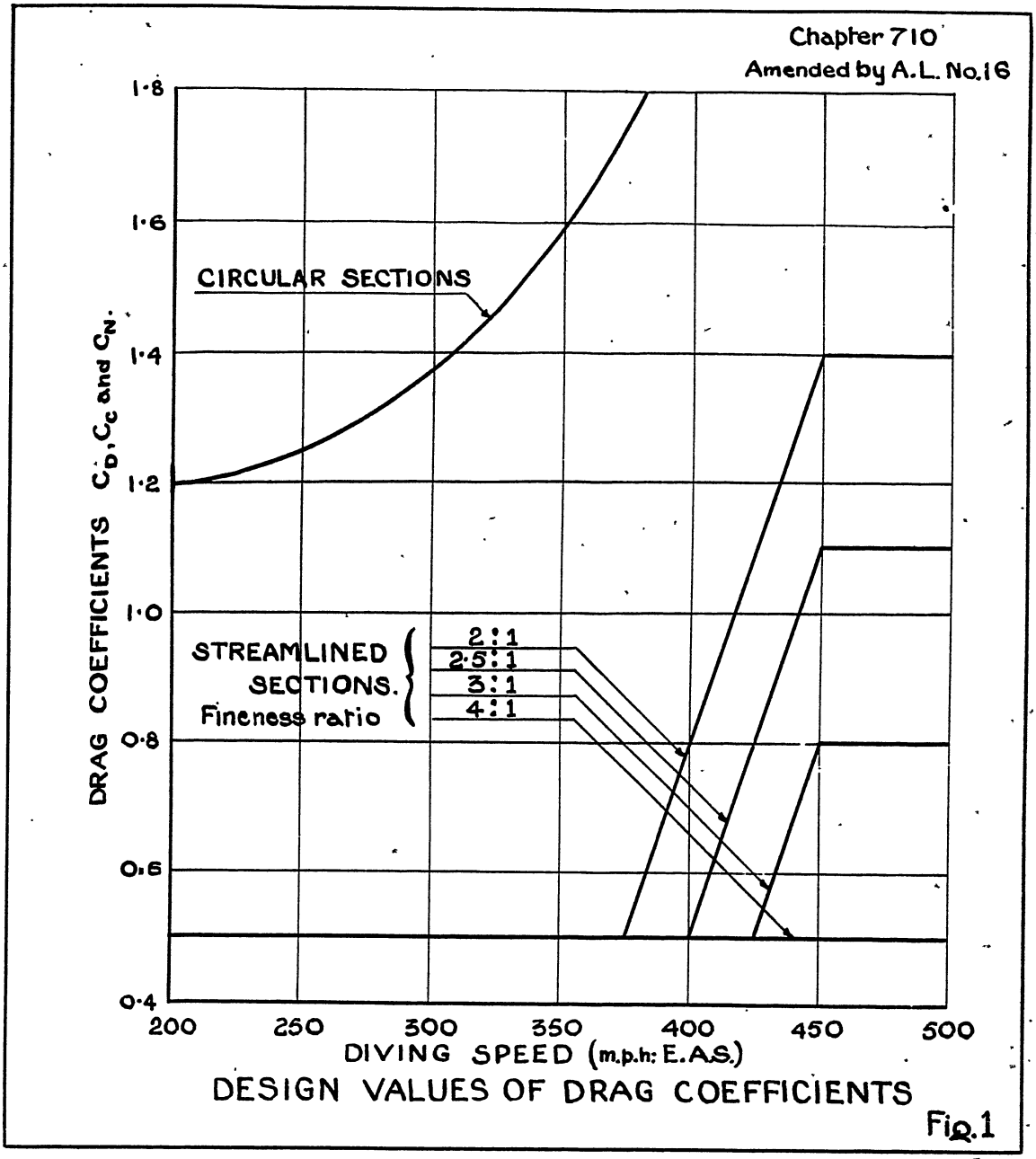

DESIGN VALUES OF DRAG COEFFICIENTS

Fig.1

TABLE 1

Type of aerial	Coefficient	Specified load coefficient	
		Case 1	Case 2
i	C_L	1·0	1·0
ii	C_S	0·5	0·25
iii	C_D	1·0	See Fig.1
iv	C_C	1·5	» » »
v	C_N	1·5	» » »

D

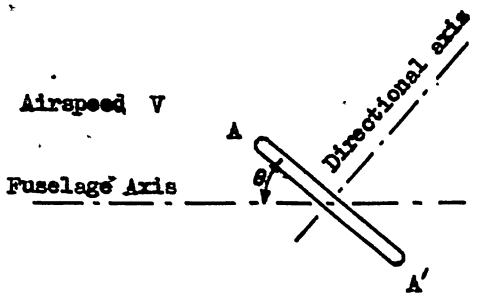

AA' is the plane of the loop

V	θ	Factor
Maximum level speed	0°-360°	2.0
Design diving speed	0°-360°	1.5

OPEN LOOP AERIAL
PLAN VIEW

Fig.2

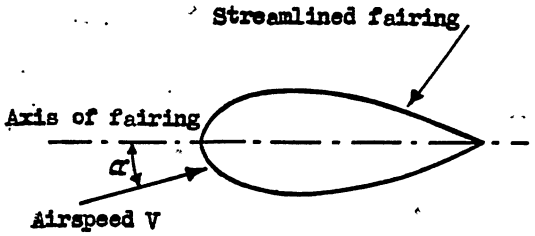

V	α	Factor
Maximum level speed	15°	2.0
Design diving speed	5°	1.5

FAIRED LOOP AERIAL
PLAN VIEW

Fig.3

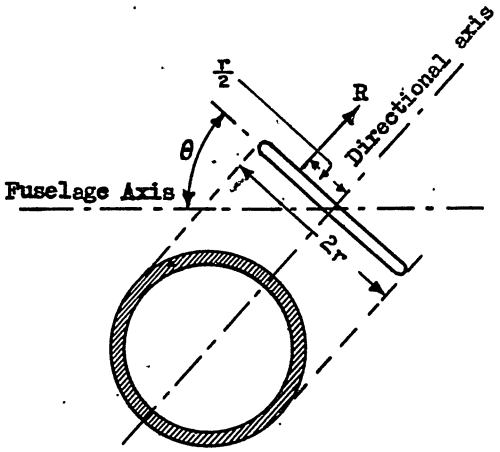

Area S' shaded

θ	Factor
0°-360°	2.0

OPEN LOOP AERIAL
PLAN VIEW

Fig.4

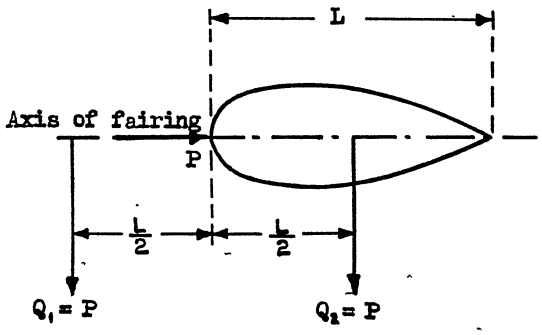

Q_1 and Q_2 show the extreme positions of Q. Q may act at any intermediate position.

Factor 2.0

FAIRED LOOP AERIAL
PLAN VIEW

Fig.5

Bonding (cont'd)

extremity and at intermediate points.

22. For methods of bonding or insulating, as necessary, small isolated fittings situated at least 2" from other bonded metal work and interposed between the fixed aerial and a main earth strip, application should be made to D.T.D. The bonding of such fittings may detract from the aerial performance.

23. Main components.- For components of all metal construction special bonding is not, in general, required provided the electrical resistance between any metal to metal joint in the component does not exceed 0.05 ohms.

24. Except where the contact resistance is less than 0.05 ohms, a terminal shall be provided on each component, (hull or fuselage, main plane, tail plane, tanks etc.) so that it may be connected to its adjacent component, which shall have a similar terminal, by an easily removable external coupling. The terminals so provided shall be of an approved type having a reliable locking device and shall be either 2BA or such larger size as is necessary to meet the requirements of Chapter 709. Elevators, ailerons, rudders, inter plane struts, under-carriages and floats do not require such terminals.

25. For components of wooden or composite construction special bonding shall be provided to ensure that all metal fittings are electrically connected together, and that the electrical resistance between any metal to metal joint in these units or between any two metal fittings does not exceed 0.05 ohms. Tinned copper or brass wire 16 - 18 s.w.g. may be used.

26. Engine installation.- Where the engine is not in direct electrical contact with the engine mounting, it shall be electrically connected to the main earth structure of the aeroplane by two removable bonds, one on each side of the engine.

27. On aeroplanes of composite construction the engine mountings shall be brought into direct contact with the main earth strips; by direct attachment in the case of single engined aeroplanes, and by branch strips of similar material to the main earth strip in the case of multi-engined aeroplanes.

28. Metal braided cables+.- All metal braided cables, both H.T. and L.T. shall be bonded to the main earth system of the aeroplane.

+ Excluding flexible harness forming part of a radio installation which shall be bonded as shown in the relevant S.I.S.

AP 970 Design Requirements for Aeroplanes AL25-37 19460801 OCR.pdf

Bonding (cont'd)

29. The cables shall be bonded at their extremities and at points in the run of the leads of not more than 18" apart for H.T. cables or 36" apart for L.T. cables. Approved bonding clamps shall be used. If difficulty is experienced in complying with this requirement, the bonding employed shall have received the prior concurrence of the D.T.D.

30. On aeroplanes of composite construction the cables to wing engines shall be bonded to the main earth strip branch in the main plane (see para.27).

31. For bonding purposes cables shall not be bunched together and secured by means of clamps or clips which make contact with a part only of the circumference of the cable.
Permanent, sound electrical contact of invariable resistance cannot be maintained by this method. Cables may, however, be whipped together with a serving of tinned stranded copper wire or other approved means, at points intermediate between two bonding clamps where it is necessary to steady the cables to avoid intermittent contact, or to improve the general layout of the wiring.

32. Bonding leads shall on no account be soldered direct to the metal braiding of cables.

33. All metal braided cables shall be securely gripped by the bonding clamps, and shall not be tightly stretched between successive clamps. Where braided cables pass through a bulkhead they shall be properly bonded or insulated at that point.

34. Pipes.- All metallic pipes and flexible pipes comprising a metallic construction, excepting the flexible tubing used for oxygen equipment to connect the economisers to the mask, must be bonded at their extremities and at intermediate points not greater than 5 ft. apart, as indicated on S.I.S.1637. On other clips used for supporting only, non-metallic packing shall be of approved material and leather shall not be used. In the case of fuel pipes of non-metallic construction which have metallic unions, each union shall be bonded separately to the airframe.

35. The electrical resistance between bonding points of each pipe, prior to installation, shall not exceed 0.025 ohms per ft., or 0.05 ohms overall, whichever is the greater, The test shall be made by a low reading ohmeter of a type approved by the D.G.A.I.

36. Magneto switches.- All magneto switches should be bolted direct to bonded metal work, but where this is not possible, a short flexible bonding lead should be run from the switch to the nearest earth point.

RELEVANT M.A.P. PUBLICATIONS

Standardisation Design Memoranda

No. 50 - Suppressors - Radio interference

Gun adjustment (cont'd)

+ 4. Fixed guns in or adjacent to the fuselage.- For normal gun installations for use in air to air combat the datum for gun mountings when viewed in elevation shall lie parallel to the line of flight of the fully loaded aeroplane in steady horizontal flight at normal top speed. A tolerance of $\pm \frac{1}{4}^{\circ}$ is permitted for the position of this datum line. Adjustment in addition to manufacturing tolerances shall be provided for each gun to allow movement of.-

(a) 1° in all directions, i.e. an included cone of 2°, around the datum for guns with calibres up to and including .5", and

(b) $\frac{1}{2}^{\circ}$ in all directions, i.e. an included cone of 1°, around the datum for guns with calibres of 20 m.m. and over.

ø 5. Where the guns are specified for use against ground targets the datum for gun mountings when viewed in elevation shall lie at 2° depression, and when viewed in plan shall lie parallel to the line of flight of the fully loaded aeroplane when in steady horizontal flight at 250 m.p.h., E.A.S. A tolerance of $\frac{+0^{\circ}}{-\frac{1}{4}^{\circ}}$ is permitted for the position of this datum. Adjustments in addition to manufacturing tolerances shall be provided for each gun to allow movement of $\frac{1}{2}^{\circ}$ in all directions, i.e. an included cone of 1°, around the datum line.

+ 6. Turret guns.- In turrets equipped with two guns the gun mountings must be adjustable in both horizontal and vertical planes, so that the gun barrel centre lines can be diverged either horizontally or vertically at any angle from the parallel position up to an included angle of at least 2°.

7. In turrets equipped with four guns the gun mounting must be adjustable so that the gun barrel centre lines can be diverged from the "all parallel" position up to the corners of a square pattern with the included angle between any two adjacent guns of at least 2°. The horizontal and vertical adjustments shall be obtained independently.

8. The actual range of adjustment provided must exceed the above range by the amount necessary to cover manufacturing tolerances in the positions of the mountings. If preferred, this excess may be provided by some form of semi-permanent adjustment (e.g. shims) whereby the guns can be aligned parallel, while the normal working adjustments remain set at their appropriate inner limits.

+ Previously D.T.D.Technical Circular No. 185
ø Res/Pub/387

B

Gun tunnels

9. Detail design.- Where guns are mounted in tunnels or grooves, the plating should be sufficiently strong to avoid panting and joints should be avoided from a point just aft of the muzzle attachments to a point 2 feet ahead of the muzzle attachment. Tunnels and grooves of 22 s.w.g. steel to B.S.S.- S.3, have been found satisfactory.

10. The top and bottom edges should be lapped over the edges of the adjacent plating. Consideration should be given to the use of butt joints in the tunnel or groove but if lapped joints are employed they should face forward. The use of rivets should be avoided as far as possible immediately in front of the muzzle, but where rivets are essential they should be flush with the surface exposed to blast.

Turrets

11. Strength.- The turret, its attachments and the surrounding structure shall conform to all the requirements laid down for the aeroplane as a whole in the Aeroplane Specification.

12. The turret, attachments and the surrounding structure shall have an ultimate factor of at least 2.0 under the following loads.-

(i) The force of recoil+ for all possible directions of fire either separately or combined with 0.75n,

(ii) The forces, due to the maximum acceleration or retardation of the turret during operation in a fully loaded condition.

(iii) A load of 50 lb. applied to all handles in any direction possible during the operation of the gun or turret.

(iv) A force forwards or backwards equal to 0.50 times the weight of the turret fully loaded. These are over-riding loads to be considered separately.

13. An ultimate factor of at least 4.0 is required on all ancillary equipment such as lifting tackle.

14. For requirements on the gunner's harness, anchorage and adjacent structure reference should be made to the appropriate chapter.

+ The force of recoil is that laid down in the gun turret specification. Where the recoil value of the gun is known from tests this may be used instead.

RELEVANT M.O.S. PUBLICATIONS

Aircraft Design Memoranda

No. 590 - Carriage of armament stores on fighter aircraft - Operational and design requirements (secret)

Standardisation Design Memoranda

No. 37 - Electro-pneumatic gun firing valves
No. 61 - Electric gun-firing - Buttons and ring control handles

Airworthiness Technical Notes

No. 143 - Design of aircraft structures for gunblast loads
No. 141 - Summary of preliminary measurements of recoil and return loads and stresses in aircraft structures due to gun firing

CHAPTER 713

BOMBING EQUIPMENT INSTALLATIONS

Note.- This Chapter was amended by A.L.No.32 to incorporate Arm.D.M.No.27.

A.

CONTENTS

	Para.
General	1
Materials	6
Dimensions of bombs and other stores to be carried	8
Carriers -	9
Attachment of carrier to airframe	10
Position of carriers	12
Installation	16
Accessibility	17
Manual release of bombs	19
Provision for loading bombs	20
Hoisting	22
Hoisting equipment	24
Quick release carrier attachment	26
Bomb trollies	27
Bomb cell inspection panels and illumination	28
Crew's stations -	30
Aeroplanes with a separate bomb aimer's station	32
Aeroplanes without a separate bomb aimer's station	34
Control wiring	35
Sights	37
Ground or water clearance	39
Marking of parts	40
Operation of bomb doors -	42
Maximum times for operation	44
Emergency operation	45
Tests	

CHAPTER 713

BOMBING EQUIPMENT INSTALLATIONS

General

1. The requirements of this chapter apply to all aeroplanes which are intended to be used for bomb dropping operations and they govern the design of the installation for this purpose.

2. The airframe design shall permit the use of standard equipment, and any component used in the installation shall be of an approved type. Where it is desired to depart from this requirement the proposal shall be referred to D.Arm.D. for prior approval.

3. The contractor shall supply to D.Arm.D.(R.D.Arm.XI), schematic drawings of the proposed bombing equipment layout as early as possible in the design stage. and before detail design commences.

4. The contractor shall also supply full particulars of the bomb installation in the form of general arrangement and detail drawings, and schedules. The drawings shall include details of all equipment supplied by the Contractor to meet the requirements of this chapter. The position and outline of all items of equipment supplied on embodiment loan shall be indicated.

5. The general arrangement drawings shall indicate the falling clearance angles between the armament stores and the airframe, the minimum requirements relating to which are given in paras.14 and 15 of this chapter.

Materials

6. The materials of those parts where specific properties, such as strength, resistance to wear or fatigue, etc., are required, shall comply with current B.S. or D.T.D. approved specifications. The use of special materials, (for example: high grade steels) which may be subject to supply difficulties, shall be avoided.

7. Components shall be protected against corrosion in accordance with Chapter 801 and to the special requirements of D.Arm.D. Parts which cannot be protected effectively shall be made of non-corrodible material to an approved specification.

Dimensions of bombs and other stores to be carried

8. The dimensions to be assumed for bombs and stores, in the installation design, shall be in accordance with the relevant S.I.S. Provision shall be made for the complete range of stores specified for the aircraft without the introduction of special adaptors for any individual store, or particular Mark of store, being necessary.

B

Carriers

9. Approved standard carriers are listed in Table I, and the strengths of these carriers are given in Arm.D.M.No.24 When D.Arm.R.D. has given approval to the development of a non-standard carrier such item shall comply with the requirements of Arm.D.M. No.24.

10. Attachment of carrier to airframe.- The carrier housing shall permit quick attachment and the mechanism should incorporate a suitable counter-locking arrangement.

11. The carrier shall be rigidly stabilised in relation to the housing or adjacent structure by contact with the bearing surfaces or other pick-up points provided on the carrier for this purpose. When the carrier attachment is of the quick release type provision shall be made for slackening off the forward stabilisers or the carrier attachment in order to facilitate loading operations.

12. Position of carriers.- The carriers for any of the specified combination of bombs shall be disposed symmetrically, or as nearly symmetrically as possible, to the aeroplane's plane of symmetry and to its centre of gravity when fully loaded. The longitudinal axis of each bomb shall be parallel to,-

(i) the plane of symmetry in plan view, and

(ii) the thrust line, or within 5° above and 5° below this line, in side view.

13. The position of the carriers in the bomb cell or wings shall be such that any specified combination of bombs may be carried without change or removal of any of the housings.

14. The position of each carrier shall be such that when any bomb is jettisoned it falls clear of the aeroplane, adjacent bombs and equipment. This requirement shall be met with the aeroplane at all possible attitudes within the ranges specified below, including all combinations of pitch and roll.

(i) Pitch - from 20° upwards, to the diving angle specified for the aeroplane.

(ii) Roll - from 10° port to 10° starboard.

In the event of difficulty being experienced in obtaining these falling angles, early reference should be made to R.D.Arm.XI.

15. For small bomb containers, the position of the parent carrier shall be such that the clearance angles from the bottom edge of the container are,-

(i) 30° forward,
(ii) 10° aft,
(iii) 25° sideways.

If there is no room for the bombs to spread sideways within the bomb cell, and if there is no danger of their being caught up in their fall, the side clearance angle may be reckoned from the bottom edge of the bomb cell instead of the bottom edge of the container, but the fore and aft clearance shall be maintained.

Installation

16. The layout of the complete installation shall be such that no part of the installation, loading apparatus, or equipment will foul any other part of the installation, loading apparatus, equipment, or the aeroplane structure under the normal conditions of loading, operation, or unloading. In the case of carrier borne aeroplanes these requirements shall be met under the conditions for the securing of Naval aeroplanes given in Chapter 102, with the aircraft heading in any direction.

Accessibility

17. The layout of the complete installation shall be such that it is possible to carry out, easily and quickly, all necessary operations (including the fitting and removal of loading apparatus, not carried in the aeroplane). In particular, with bombs loaded there shall be good accessibility to release unit cocking levers and test plungers, crutches, stabilizers, and fuzing units, and for connecting the 5 pin plugs to their sockets. The bomb winch cable connector shall be readily accessible for uncoupling the cable after loading the bomb. Where the connector and the winch reaction socket are detachable and capable of being withdrawn with the cable, there shall be easy access to the quick release pin attaching the connector to the carrier or bomb.

18. All parts requiring regular inspection shall be readily accessible under the conditions in which they are normally inspected.

Manual release of bombs

19. When a bomb release slip, embodying a manual release control, is used, either alone or incorporated in a carrier, the following requirements shall be satisfied. Operation shall be as direct as possible, by means of a stowable handle, and a suitable access hole provided in the floor of the fuselage. Alternatively linkage may be used, part of which may be fixed to the bomb carrier. There shall be no positive connection between the control or other part fixed to the carrier and the handle or other linkage attached to the airframe. Care should be taken in the design to avoid the possibility of accidental operation of the manual release.

C

Chapter 713
Amended by A.L.No.32

Provision for loading bombs

20. The installation and associated parts of the aeroplane structure shall be designed so that any of the specified bombs or combinations of bombs can be loaded easily and quickly.

21. The arrangement of the installation in a boat seaplane shall be such that little or no risk of damage to the aeroplane structure will be involved in loading the bombs whilst the seaplane lies at its moorings. With this in view, a water clearance greater than that specified in para.38 should be provided if possible. The arrangement shall be such that it will not interfere with the docking of the seaplane.

Hoisting

22. The location of bomb winches or hoists shall be such that the lug of the bomb which is being hoisted will enter directly into the jaws of the release slip, when the aeroplane is in its normal attitude of rest.

23. The use of intermediate pulley wheels should be avoided.

Hoisting equipment

24. Approved standard bomb hoisting equipment is listed in Table II.

25. Wherever practicable, a standard bomb winch shall be used, but where the design is such that this cannot be done, then, for bombs and stores weighing up to 2,000 lb., two standard bomb hoists shall be used in the manner indicated in the relevant S.I.S.

Quick release carrier attachment

26. When a standard bomb winch is used and the attachment of the carrier to the housing is of the quick release type, the design shall be such that the cable can be connected directly to the carrier, thus enabling the carrier to be attached to the bomb on the ground and the combination then hoisted as one unit.

Bomb trollies

27. A minimum clearance of 3 in. both vertically and horizontally is required beneath the aeroplane, or bomb cell with doors open, to enable the appropriate bomb trolley to be moved into position beneath the carrier without the necessity for accurate manoeuvring, and to allow for rough ground. Approved standard bomb trollies are listed in Table III.

Bomb cell inspection panels and illumination

28. One or more transparent panels shall be provided for inspecting the bomb cell, during flight, for the presence of bombs which may have been retained through failure of the releasing mechanisms. The position of the panels shall be such that they are easily accessible from one of the crew stations (pilot's excepted) and such as to bring each bomb station into view, allowing for the presence of bombs at other stations. For this purpose one or more lights shall be provided in the bomb cell to give adequate illumination with bomb cell doors closed. The light switch shall be placed within the fuselage, adjacent to the panel. One or more lights, with a switch accessible from the ground, shall be provided to give general illumination round the bombs for loading at night. The switches for both sets of lights shall be connected to the bomb doors so that opening or closing of the doors will extinguish the lights but will not switch them on again until operated by hand.

29. A common light or lights may be used for inspecting the bomb cell in flight and for loading at night provided that all the requirements of para.28 are met.

Crew's stations

30. Aeroplanes with a separate bomb aimer's station.- Aeroplanes provided with a separate bomb aimer's station shall be equipped in accordance with Table IV.

31. The pilot shall have control of the fixed type firing switch, container jettison switch, and remote control handle for bomb jettison. Controls shall be fitted in accordance with Chapter 103 and in a position convenient for the pilot's use.

32. Aeroplanes without a separate bomb aimer's station.- Aeroplanes not provided with a separate bomb aimer's station shall be equipped in accordance with Table V.

33. The pilot shall have control of all switches, selectors, and distributors. All controls shall be fitted in accordance with Chapter 103 and in positions convenient for operation by the pilot. They shall be arranged so that there is no risk of accidental interference with other controls in the cockpit. Indicators shall be in a well lit position and shall be visible to the pilot with a minimum of bodily movement.

Control wiring

34. The design and installation of the circuit wiring shall comply with the requirements of Chapter 709.

D

Chapter 713
Amended by A.L.No.32

Sights

35. The bomb-sight mounting shall be rigidly connected to the aeroplane structure in a well lit position.

36. The bomb-sight shall be installed so as to conform to the requirements laid down in the relevant S.I.S.

Ground or water clearance

37. In the case of a landplane or ship-plane, the ground clearance of any bomb or store shall be not less than 6" in each of the following cases;-

(i) when at rest with the thrust line horizontal, the tyres inflated to normal pressure and the undercarriage and tyres compressed to an extent corresponding to $\lambda_{n}g$, (See Chapter 304), and

(ii) when at rest with nose or tail wheel on the ground, one main undercarriage tyre deflated and the other inflated to the maximum permissible pressure.

38. In the case of a seaplane, there shall be at least 27 inches between the water level and the lowest point of any bomb or store when the seaplane is at rest in the fully loaded condition.

Marking of parts

39. The marking of cables shall be in accordance with the requirements of Chapter 709 and the identification marking of other parts in accordance with Specification No.D.T.D.1003.

Operation of bomb doors

40. A positive means, under the control of the pilot, shall be provided for opening and closing the bomb doors in flight; spring operated doors are not acceptable.

41. Care should be taken in the design stage to ensure that correct operation of the bomb doors is not prejudiced by;-

(i) deformation of the aeroplane structure by external aerodynamic load, etc.,

(ii) jamming caused by deformation of the doors or surrounding structure,

(iii) incorrect alignment of the hinges under load, or

(iv) low temperature conditions.

Operation of bomb doors (cont'd)

42. Maximum times for operation.- The operation of opening or closing the doors shall be completed within six seconds from the time of selection of the appropriate control.

43. It shall be possible to commence opening the bomb doors immediately after they have been closed and the design of the installation shall be such that the "doors open" position may be selected while the closing operation is still in progress.

44. Emergency operation.- An emergency method of opening and closing the doors shall be provided.

Tests

45. On all prototype aeroplanes (and on the first of all aeroplanes where a new installation is used, or use of special equipment has been approved), the contractor on completion of the installation, shall subject it to such tests as D.T.D. or D.Arm.D. considers necessary.

TABLE I

STANDARD CARRIERS

Type of carrier	Load capacity	Strength Class (Arm.D.M.No.24)
50 lb. EM/EF Carrier Unit Light Series Bomb Carrier Mk.IV 100/1000 lb. EM/EF Carrier Unit	Up to 50 lb. Up to 4 x 40 lb. 100 lb. to 1000 lb.	I
50 lb. EM/EF Carrier Unit Light Series Bomb Carrier Mk.IV 100/1000 lb. EM/EF Carrier Unit 250/1000 lb. Standard (Avro) Bomb Carrier Mk.II N 2000 lb. Bomb Carrier Mk.III (Lug Suspension) 2000 lb. Torpedo Carrier Mk.IV 2500 lb. Bomb/Torpedo Carrier, Unit construction Type A	Up to 50 lb. Up to 4 x 40 lb. 100 lb. to 1000 lb. 250 lb. to 1000 lb. 1000 lb. to 2000 lb. 1000 lb. to 2000 lb. 1000 lb. to 2500 lb.	II
50 lb. EM/EF Carrier Unit Light Series Bomb Carrier Mk.III or IV 100/1000 lb. EM/EF Carrier Unit 250/1000 lb. Standard (Avro) Bomb Carrier Mk.I, II, IN and IIN 2000 lb. Bomb Carrier Mks.I, IA and III 2000 lb. Torpedo Carrier Mk.IV 2500 lb. Bomb/Torpedo Carrier, Unit Construction, Type A EM Release Unit Type F Attachment Type G with EM Release Unit Type F	Up to 50 lb. Up to 4 x 40 lb. 100 lb. to 1000 lb. 250 lb. to 1000 lb. 1000 lb. to 2000 lb. 1000 lb. to 2000 lb. 1000 lb. to 2500 lb. 4000 lb. 8000 lb. to 12,000 lb.	III

TABLE II

STANDARD WINCHES AND HOISTS

Type
Standard 1000 lb. Bomb Winch
Standard 1000 lb. Bomb Hoist, Type C
Standard 2000 lb. Bomb Winch, Mk.II
Standard 4000 lb. Bomb Winch
Standard 6000 lb. Bomb Winch

TABLE III

STANDARD TROLLIES

Type of trolley	Stores carried	Maximum load
C. Mk.II	All bombs, mines and containers up to 2000 lb.	3000 lb.
C. MK.III	All bombs, mines and containers up to 4000 lb.	4000 lb.
C. Mk.IV	All bombs, mines and containers up to 2000 lb.	3000 lb.
D. Mk.III	4000 lb. bombs.	4000 lb.
E *	All bombs, mines and containers up to 12000 lb.	12000 lb.
F	All bombs, mines and containers up to 8000 lb.	8000 lb.

* The type E trolley is used only for aeroplanes which carry 12000 lb. bombs. This trolley is provided with a wooden platform for carriage of stores below 4000 lb. in weight.

F

TABLE IV

STANDARD CONTROLS FOR AEROPLANES
WITH A SEPARATE BOMB AIMER'S STATION

Component	Notes on purpose
Auto, Bomb Distributor, 16 point, Type VI Auto, Bomb Distributor, 32 point, Type VII Preselector Unit, 16 point, Type A or B Preselector Unit, 32 point, Type A or B	For controlling order of firing bombs and containers.
Selector, Switchbox, 16 point, Type E or F	Incorporates bomb jettison control
Selector, Switchbox, 16 point, Type J	Auxiliary to Types E and F
Switchbox, S.P., Type B	For selecting bomb fuses (one required for nose fuses, one for tail fuses).
Push Button, Type A	Pilot's firing switch, fixed type
Push Button, Type B	Bomb aimer's firing switch, pendant type
Push Button, Type H	Pilot's jettison control for S.B. and SCI containers
Operating handle	Pilot's remote control for bomb jettison. (Connects with Selector Switchbox, 16 point)

TABLE V

STANDARD CONTROLS FOR AEROPLANES
WITHOUT A SEPARATE BOMB AIMER'S STATION

Component	Notes on purpose
Bomb Distributor, 2-way Bomb Distributor, 3-way Auto, Bomb Distributor, 6-way Auto, Bomb Distributor, 16 point	Combines functions of distribution and selection.
Change-over switch, D.P., Type A	For armament selection (e.g. "Bombs safe - R.P.) Essential as a master switch when bombs are stowed externally.
Switchbox, S.P., Type B	For selecting bomb fuses (One required for nose fuses and one for tail fuses)
Preselector, 16 point, Type A or B	For use with Auto-Bomb Distributor, 16 point.
Selector, switchbox, 16 point Type E or F	For use with Auto-Bomb Distributor, 16 point.
Push Button, Type A	Firing switch, fixed type.
Push Button, S.P., Type B	For jettisoning bombs (not used in conjunction with Selector, switchbox, 16 point)
Jettison Switch, Type H	For S.B. and SCI containers.

RELEVANT M.O.S. PUBLICATIONS

Specifications

No.D.T.D. 1003 - Identification marks on aircraft and aircraft parts

Aircraft Design Memoranda

No. 590 - Carriage of armament stores on fighter aircraft. Operational and design requirements (secret)

Standardisation Design Memoranda

No.12 - Electric switches for aircraft

R.A.E. Technical Notes

No. Aero 1715 - The estimation of the aerodynamic loads on external stores

No. Aero 1746 - Underwing carriage of bombs on fighter-bombers

Armament Design Memoranda

No. 24 - Strength requirements for bombs and carriers and functioning tests for release mechanisms for use in aircraft

CHAPTER 714

DE-ICING INSTALLATIONS

Note.- The subject matter in this Chapter was previously contained in A.D.M.436 and Chapter 26.

FS/64

CONTENTS

	Para.
Introduction	1
Duration	3
Materials	4
Wings, tailplanes and fins	5
Control surfaces	7
Airscrews	8
Wireless aerial systems	10
Fuselage	12
Panel and doors	14
Windscreens and view panels	18
Engines	21
Miscellaneous -	
Wing slits	24
Wheels	25
Vents	26
Flying instruments	27

Amended by A.L.No.26.

CHAPTER 714

DE-ICING INSTALLATIONS

Introduction

1. The following icing safeguards shall be incorporated in all aeroplanes unless otherwise stipulated in the aeroplane specification. Reference should be made to A.M. pamphlet No.83 (2nd Edition).- "Ice Formation on Aircraft and its Prevention."

2. Knowledge of icing hazards and methods of countering them is continually increasing, and published requirements soon become out of date. The designer should collaborate closely with the Director R.A.E.(S.M.E.Dept) so as to get the benefit of the latest information available. Icing must be given consideration from the outset of design, as some of the precautions, - e.g. protection of control surfaces - affect the basic layout.

Duration

3. De-icing equipment which has to be designed in relation to the duration of its use (e.g. the de-icing fluid reservoirs for propellor, windscreen and Dunlop wing de-icing overshoe) shall provide for use during one-third of the maximum operational endurance (i.e. excluding purely reinforcing ranges). In case of the Dunlop wing overshoe cruising rate of flow, not flood flow, shall be assumed, plus half an hour at flood flow.

Materials

4. Magnesium alloys are very susceptible to corrosion by alcohol and should not, therefore, be used in contact with de-icing fluids containing alcohol. Supply tanks for all windscreen de-icing fluid shall be suitable for use with either Ethyl Alcohol (Stores Ref.33C/720) or D.T.D.406A. +

Wing, tailplanes and fins

5. The type of de-icing equipment, if any, to be fitted to wings, tailplanes and fins will be given in the specification.

6. If Goodrich equipment is called for it shall be designed and fitted in collaboration with the Director R.A.E.(S.M.E. Dept) It should cover at least 85% of the exposed leading edge, and extend as near to the tips as possible, particularly on the wings. The overshoes shall cover at least 5% of the wing chord on both upper and lower surfaces. The petrol filler caps and overflow vents should be arranged so that if petrol is spilled during fuelling, it will not flow over the rubber overshoes.

Control surfaces

7. The formation of ice on the leading edge of a control surface may seriously alter its aerodynamic properties. This

---

+ From A.D.M.563.

AP 970 Design Requirements for Aeroplanes AL25-37 19460801 OCR.pdf

may lead to loss of aerodynamic balance and consequent loss of control, or to increased aerodynamic balance and serious oscillation. There is also a risk that an accumulation of ice on the leading edge may foul adjacent parts of the fixed surface. For details of recommended design features see A.M. Pamphlet No.83, (Issue 2).

Propellers

8. All flying boats shall be fitted with glycol slinger ring de-icing using approved de-icing fluid. De-icing paste (Stores Ref.33c/654) will be used on all other types including Naval aeroplanes.

9. Details of the complete installation are given in A.M. Pamphlet No.83 (Issue 2). De-icing fluid on the basis of two pints per blade per hour shall be provided. Final approval of the slinger ring installation will depend on behaviour in actual flight. Routine testing will not be done under ice forming conditions, and the object of the tests will be to establish that fluid flows evenly over both faces of each blade close to the leading edge, and that the duration of supply is satisfactory.

Wireless aerial systems

10. All aerial systems should be designed to withstand the loads associated with ice formation. Appropriate loads are given in Chapter 710.

11. Care should be taken to ensure that the aerial system preserves its insulation in ice-forming conditions. Suitable shields should be provided to prevent ice forming over the insulators, if such guards are not incorporated in the insulators themselves. The fairlead of a trailing aerial should be protected by an ice shield.

Fuselage

12. Fuselages of multi-engined aeroplanes are liable to be damaged by ice thrown from the airscrews, and are therefore to be protected with duralumin sheet of not less than 24 gauge (0.022 In.) or other materials of equivalent resistance, over a danger area extending from 3 ft. forward to 5 ft. aft of the plane of the airscrew.

13. Windows are not to be located within the danger area unless this is essential, in which case they are to be of cellulose acetate sheet not less than 3 mm. (0.12 in.) in thickness.

Panels and doors

14. Attention should be given to the possibility of ice formation on panels and doors that may have to be opened in flight. The following are particular examples:-

(a) Emergency exits
(b) Retractable undercarriage doors
(c) Bomb doors
(d) Special doors on gun turrets etc.
(e) Dinghy stowage.

Break-out panels for pilot's "clear view" will generally require more drastic treatment than the above and are dealt with in para.17.

15. With the possible exception of large bomb doors, it should be practicable to eliminate serious risk of jamming of doors through ice formation without appreciable loss of efficiency in other directions. It is important that all doors and panels should be flush with the main surface along all edges.

16. In some cases rubber insertions are advantageous in order to prevent ingress of water. Care is to be taken to ensure that the rubber sealing strip is a good fit on the edge, and in

the groove, of the panel. A satisfactory fit will be obtained if the width of the gap between the outer edge of the panel and the inner edge of the frame, when the panel is laid centrally in the frame, is slightly less than the width of the rubber tongue which will fill the gap. This will ensure that the rubber tongue will be compressed in such a manner that it will leave no crack for the ingress of water and will take up any slackness due to shrinkage at low temperatures.

17. Where there is still a risk of ice-formation, attention might well be given to the possibility of breaking of ice. The following adhesive forces may be assumed:- for panels normal to the airstream, an adhesion of 50 lbs per inch length of periphery for panels inclined not more than 15° to the airstream, an adhesion of 15 lb per inch length of periphery. The structure should be strong enough to withstand loads applied locally by a lever or screw device sufficient to break the ice along three or four inches of the periphery.

Windscreens and view panels

+ 18. The requirements for windscreens and view panels are given in Chapter 103.

19. To avoid unnecessary complication in the spray de-icing, called for in Chapter 103 para.25, the de-icing fluid should be the same as that used for airscrew de-icing and preferably drawn from the same supply tank. De-icing fluid on the basis of 2 pints per hour is to be provided. The pump must be capable of delivering at four times this rate.

20. Other systems for de-icing windscreens are not expressly excluded but proposals for their use should be sent to the S.M.E. Department, R.A.E., for concurrence at an early stage so that there is still time to proceed with a more conventional system without delaying the completion of the design.

Engines

21. Exposed air intakes facing the main airstream shall be

+ Res/Pub/387.

fitted either with wire mesh ice guards + or with a means of heating to prevent the formation of ice or to remove it, after it has formed.

22. An alternative air intake located in a sheltered position shall also be fitted. If this position is aft of the radiator duct it shall be so arranged as to be fully effective whatever the position of the radiator shutter(s). The duct is usually arranged for best aerodynamic efficiency at cruising speed. When the shutter is open for maximum cooling, the airflow may be considerably disturbed, possibly enough for cold air eddies to reach the sheltered air intake to the carburettor. To avoid this the carburettor intake should be forward rather than aft of the radiator shutter. Wind tunnel tests may be desirable to determine a suitable location for the sheltered air intake.

23. Engines not provided with carburettors approved by the Director of Technical Development (R.D.E.) as immune from internal icing shall be fitted with an approved alcohol injection system.

Miscellaneous

24. Wing slits.- (i.e. fixed slots not at the leading edge). Slits are liable to clog with ice and there is no known practicable method of prevention. Obstruction of the slit is unlikely to affect cruising flight appreciably, but may lead to difficulties when the pilot is about to land. The increased landing speed may itself be serious, but the main source of danger probably lies in the pilot's not knowing that the slits are clogged with ice and adopting an approach and landing technique on the assumption that they are fully effective. Designers, therefore, should not use slits if these can be avoided.

25. Wheels.- Ice may form on undercarriage wheels, under conditions not necessarily associated with ice forming weather conditions, when an aeroplane is operated from snow-covered aerodromes. Snow becomes attached to wheels and adjacent parts while the aeroplane is taxying and is subsequently raised with the undercarriage. Under a suitable but not improbable sequence of temperature conditions the snow melts and then freezes again to form ice which can lock the wheels completely with serious consequences when the aeroplane lands. Attention should be given to this risk in the design stages with the object of preventing the serious trouble which may arise from this source.

+ See R.A.E. Tech. Note. Eng 124.

AP 970 Design Requirements for Aeroplanes AL25-97 19460801 OCR.pdf

Miscellaneous (cont'd)

26. Vents.- Fuel and oil tank vents are to be so installed that their obstruction by ice or snow is normally impossible. This can usually be achieved by making such vents to face aft.

27. Flying instruments.- It is to be impossible for suction operated flying instruments to be rendered inoperative by ice. When hot air from the cabin heating system is available, a satisfactory solution is to place a canvas bag round the back of the flying instrument panel so as to enclose the instruments but leave their air intakes open to the cockpit atmosphere. If this bag is supplied with warm air from the cabin heating system, the instrument will be warmer than the air operating it and condensation is not likely to occur.

28. Great care must be taken to prevent water collecting in the pipe lines from the pressure head in such a manner that it may freeze and block the pipe. S.I.S.1163 gives guidance on this.

RELEVANT M.A.P. PUBLICATIONS

Aircraft Design Memoranda

No. 563 - Windscreen de-icing tanks
No. 592 - Toxic effect of de-icing alcohol

Standardisation Design Memoranda

No. 2 - Hand priming and carburettor (alcohol) de-icing pumps

R.A. E. Technical Note

No.Eng.124 - Ice guards for aero engine air intakes

OTHER PUBLICATIONS

Air Ministry Pamphlets

No.83 - Ice formation on aircraft, and its prevention

CHAPTER 715

FIRE PRECAUTIONS

Note.- The subject matter of this chapter has been completely revised by A.L.34 to incorporate requirements from A.D.M.No.583, together with new requirements. A

Amended by A.L.No.34

CHAPTER 715

FIRE PRECAUTIONS

Introduction

1. The requirements of this chapter define a standard of fire precaution which shall be met on all aeroplanes having power plants incorporating reciprocating engines.

2. As written the requirements are applicable to aeroplanes having tractor type power plants incorporating reciprocating engines. When pusher type power plants with such engines are incorporated the requirements shall be adjusted accordingly.

3. Aeroplanes with power plants incorporating gas turbine engines are not dealt with in detail, but the principles expressed in this chapter are applicable.

Essential services

4. For the purpose of fire protection, the following shall be considered as essential services.-

(i) propeller feathering control and actuating gear,

(ii) hydraulic propeller feathering motor cut-out,

(iii) fuel cock control,

(iv) fire extinguisher control, and

(v) cooling air control and actuating gear.

Fireproof bulkheads

5. A fireproof bulkhead shall be fitted on each power plant and shall be such as to completely isolate any fire which may occur in the power plant. In addition, the fireproof bulkhead shall be designed to ensure that all fire sources within the power plant are effectively prevented from initiating fires outside the power plant.

6. Each fireproof bulkhead shall fill a complete cross section of the fuselage or nacelle, and shall be provided with any extension necessary to ensure that fire cannot extend beyond the power plant by means of ducts or structural channels. Such extensions may be omitted provided that the ducts and channels are constructed to give fire protection at least equal to that provided by approved extensions.

7. Approved type.- Fireproof bulkheads shall be of sheet steel of at least 22 S.W.G. and extensions provided to meet the requirements of para.6 shall be of sheet steel of at least 26 S.W.G.

8. Panels in bulkhead.- Panels carrying equipment may form part of a fireproof bulkhead provided that the fire resistance of the bulkhead is not thereby reduced.

9. Holes.- All holes in the fireproof bulkhead shall be properly fireproofed by a suitable bushing at least equal in fireproof qualities to that of the bulkhead.

10. Space behind bulkhead.- Sufficient space shall be left behind the fireproof bulkhead to ensure that, in the event of the bulkhead being heated to 1,000°C, the pilot will be unharmed when operating the controls, and also to ensure that no item external to the power plant will be ignited. No actuating gear for controls needed after an engine has stopped and no electrical service to other engines shall be within 4" of a fireproof bulkhead.

Wing covering

11. To prevent flames which by-pass the fireproof bulkhead from entering the aeroplane structure, a metal wing covering of other than magnesium alloy shall be fitted on all multi-engined aeroplanes. This metal covering shall be such as to effectively protect an area extending to a width of at least 18" on either side of the nacelle, and from the wing leading edge to the trailing edge.

Protection of inflammable liquids

12. Tanks containing inflammable liquids other than engine oil shall be positioned aft of the fireproof bulkhead and shall be protected from the bulkhead by the provision of heat insulation at least equivalent to that given by a clear 4" air space. Oil tanks if positioned forward of the fireproof bulkhead shall be separated from the rest of the power plant by a bulkhead giving protection at least equal to that provided by the fireproof bulkhead and heat insulation as above. All tanks shall be so positioned that in the event of damage by enemy action or crash landing, spilt liquid will not drain on to the bulkhead or into the power plant.

13. The positioning of components carrying inflammable liquids shall be such that the risk (including that from damage by enemy action or by accident) of contact between the liquid and any component having a working temperature of over 200°C is at a minimum.

14. All metal surfaces in the vicinity of tanks carrying inflammable liquids shall be treated with one of the organic protectives specified in Chapter 801, to reduce the risk of ignition of fumes by sparks caused by enemy action.

B

Protection of inflammable liquids (cont'd)

15. Ancillary mechanisms dependent upon inflammable liquids for their operation shall not be fitted forward of a fireproof bulkhead when an alternative position is possible.

16. Pilot operated fuel cocks, and propeller feathering pump motors when installed, shall be behind the fireproof bulkhead.

17. Pipes.- Every consideration shall be given to keeping the number and length of pipes carrying inflammable liquids, to a minimum.

18. Rigid pipes carrying inflammable liquids when forward of a fireproof bulkhead, shall be made from one of the following,-

Materials to Specification Nos. T.7, T.26, T.35, D.T.D.253, D.T.D.318, D.T.D.323, D.T.D.432, D.T.D.477, D.T.D.503, and D.T.D.604.

or, Bundylim.

19. Flexible pipes or joints carrying inflammable liquids when forward of the fireproof bulkhead, or within a distance of 4" behind the fireproof bulkhead shall be fire resistant. Flexible pipes used in such positions shall comply with Specification No.A.D.148. Pipes not complying with this specification shall be fitted with approved asbestos covering as detailed in S.I.S.No.68. This covering may be omitted on pipes aft of the fireproof bulkhead if the approach of the pipe is normal to the bulkhead through the last 4".

20. Pipe lines carrying inflammable liquids shall be positioned at as great a distance as possible from the oxygen installation.

21. Fuel tanks.- Reference should be made to Chapter 703 in regard to the precautions which shall be taken against fire when filling fuel tanks.

Precautions regarding intakes, drains, vents and exhaust

22. All vents and drains shall be situated so that a cone with semi-angle 15° and of infinite axial length, with its apex at the vent or drain outlet, and its axis parallel to the local airflow, does not overlap a similar cone with its apex at the exhaust outlet and having an axial length of 6 ft. (or such shorter dimension as is given by that distance at which the exhaust gas can be proved incapable of causing ignition under all possible engine conditions).

23. The accumulation of effluents on, or in, the aeroplane structure shall be prevented and the aeroplane structure behind the effluent discharge point shall be carefully sealed if necessary to meet this requirement.

24. Vents on tanks containing inflammable liquids shall discharge outside the aeroplane structure.

25. All sections of the airframe, cowlings and engine air intake systems shall be drained both in flight and on the ground. The drains shall ensure that the accumulation of inflammable fluids caused by leakage, enemy action or careless refuelling, is prevented. Wherever possible the air intake drains should be led outside of the cowlings.

26. The exhaust system shall be so situated that, no part of the aeroplane or its normal fitments is ignited or scorched.

27. All exhaust, induction, and air intake piping joints inside the cowling shall withstand an internal pressure of 20 lb/sq.in. without leakage, and 50 lb/sq.in. without damage. Joints shall be such that they will not break down due to vibration.

28. Fuel lines which will be severed when a drop tank is released shall be positioned so that their contents drain outside of the aeroplane structure.

Control of airflow

29. Fires involving fractured exhaust and induction manifolds and fires originating in spaces swept by cooling air are of great intensity. Advantage should be taken of partitions, such as shoulder cowls, to make them in steel of at least 26 S.W.G. where by doing so, the spread of fire to other parts of the engine installation can be prevented.

30. Consideration should be given to the provision of devices by means of which the flow of cooling air can be reduced or eliminated, as these greatly reduce the risk of fire spreading, and increase the effectiveness of extinguisher fluid. In the absence of such provision, it may be necessary to increase the quantity of extinguisher fluid beyond that required by the relevant S.I.S.

31. Ventilation of compartments.- All sections of the aeroplane in which an explosive mixture can be formed by leakage, shall be ventilated in such a manner that the mixture is rapidly dispersed. The ventilation provided shall be such that the airflow is away from the power plant and crew and passenger compartments.

C

Fume seals

32. Positive seals shall be provided at the fireproof bulkhead and wing roots to prevent the passage of fumes or fuel vapour.

33. Parts of the cabin heating or cabin pressurising system within the power plant, and any air intake forward of and passing through, the fireproof bulkhead, shall at least equal the fireproof bulkhead in fire resistant qualities. The design of these systems shall be such that no fumes or smoke can enter the fuselage when an engine fire occurs. The provision of suitably placed shutters in these systems, of fire resistance at least equivalent to that of the fireproof bulkhead, and operated automatically in conjunction with the fire extinguisher control, forms an acceptable means of meeting these requirements.

34. The gun bay shall be effectively sealed to prevent the infiltration of inflammable vapours.

Fire access panel

35. A hinged spring loaded panel, not less than 4" square and split horizontally or vertically, shall be provided. The panel shall be designed and positioned to allow the easy insertion of a standard ground services piercer horn, in a manner which will ensure that the extinguisher fluid will effectively reach the carburettor (or its equivalent) and the accessory bay.

Soldering

36. The use of soft solder forward of the fireproof bulkhead on essential services, Class 1 parts, and pipes carrying inflammable liquids, is not acceptable.

Insulation

37. Absorbent heat insulating materials shall not be used unless contamination by inflammable fluid is rendered impossible.

Electrical equipment

38. The flame-proofness of all electrical equipment shall comply with the requirements of Chapter 709.

Additional fire sources

39. Special consideration shall be given to the dangers incurred when combustion heaters, auxiliary power units, or thermal de-icing for wings, are fitted.

Fire resistance tests

40. The fire resistance of all of the following items forward of the bulkhead be tested in accordance with the requirements of paras.41 and 42,-

(i) Class 1 structural members,

(ii) mechanical and electrical equipment forming part of essential services,

(iii) accessories and instruments carrying inflammable liquids, and

(iv) bushes in the fireproof bulkhead.

41. The item shall be placed between 1" and 1½" from the nozzle of a blow lamp, with a 4½" flame at 1,000°C, and shall be kept there for 5 minutes. The blow pipe used shall have the following dimensions.-

Nozzle diameter ¾"
Nipple diameter 0.0135"
Distance from nozzle to nipple 4".

42. As a result of this test, the item shall not break down in such a manner as to cause a fuel leak or to otherwise jeopardise the aeroplane when under the load appropriate to un-accelerated flight.

D

RELEVANT M.O.S. PUBLICATIONS

Specifications

No. D.T.D. 1012 - Fire extinguishers for use in aircraft
No. D.T.D. 1050 - Acceptance tests for fireproof bulkheads

Airworthiness Technical Note

No. 145 - Prevention of exhaust gas contamination in aircraft cabins and cockpits

R.A.E. Reports

No. Memo. E.L.482 - Design and construction of electrical equipment

Scientific and Technical Memoranda

No.C11/44 - Reduction of fire risk in operational aircraft

CHAPTER 716

ANTI-SPIN PARACHUTE INSTALLATIONS

Note.- This chapter has been completely revised following J.A.C. Paper No. 295.

CHAPTER 716

ANTI-SPIN PARACHUTE INSTALLATIONS

1. Introduction.

1.1. The requirements of this chapter are applicable to the provisioning and installation of anti-spin parachutes in aeroplanes of conventional layout.

2. General

2.1. Basic requirements

2.1.1. An anti-spin parachute in accordance with S.I.S. 54, shall be provided on all prototype aeroplanes up to 30,000 lb. all-up-weight, undergoing stalling or spinning trials and for similar purposes on other aeroplanes at the discretion of D.G.T.D. The Director, R.A.E., shall be notified when it is proposed to fit an anti-spin parachute for flight trials so that the designer may take advantage of any recently gained experience.

2.1.2. The installation shall be designed with the object of stopping the rotation in a spin if this cannot be achieved by use of the normal controls and shall be such that after rotation has been stopped, the parachute will not become detached, except by the pilot's action, until a speed has been reached at which it is safe to jettison the parachute. The installation shall be designed to minimise shock loads.

2.1.3. A reliable jettison device shall be provided so that the parachute and cable can be jettisoned at any speed up to the maximum that the installation can withstand without failure.

2.1.4. The installation shall also include an overriding jettison device in case the normal device does not function. This device shall comply with S.I.S. 54, or shall be approved in writing by the Director, R.A.E. It shall permit the parachute and its cable to break away cleanly, without risk of fouling or damage to the aeroplane, if the speed is increased to the necessary value and without any other action by the pilot. A secondary purpose of the overriding jettison device is to ensure that, if unexpectedly high snatch loads are produced while the parachute is opening, the parachute will not burst but will break away cleanly and without damage to the structure.

2.1.5. The point of attachment of the cable to the aeroplane shall be as far aft as possible.

2.2 Provisioning

2.2.1 A spare parachute and cable assembly shall be provided.

3 Detail requirements

3.1 Parachute

3.1.1 The parachute shall be large enough to meet the requirements of para.2.1.2. The diameter shall not in any case be less than that given by the formula,-

$$D = \sqrt{\frac{.032Sb}{\ell}}$$

where D....ft.... Mouth diameter of parachute,

S....ft^2.... Gross wing area,

b....ft.... Overall wing span,

and ℓ....ft.... Distance between the c.g. of the aeroplane and the effective point of attachment of the parachute cable to the aeroplane, measured parallel to the chord line.

3.2 Cable

3.2.1 An approved cable shall be employed and its length, interpreted as the distance from the jettisoning device to the apex of the shroud lines, shall be 2ℓ where ℓ is defined in para.3.1.

3.3 Parachute container

3.3.1 A container shall be provided for the parachute and shall be so designed that there is no risk of accidental streaming of the parachute.

3.3.2 The design shall be such that upon operation of the streaming control the opening of the container and the ejection of the parachute will both be effected positively. Designs relying on aerodynamic forces for either of these operations are not acceptable.

3.3.3 The position of the container and the design of the installation shall be such that there is no risk of the parachute or cable fouling any control surface. If possible a position aft of the tailplane and fin should be chosen. The container should be designed to produce only a small or no alteration to the aerodynamic characteristics of the aeroplane.

B

3.3.4 Reasonable precautions shall be taken to ensure that the container is watertight, and will remain so during flight tests. Complete watertightness must be ensured in flying boat or seaplane designs if the container is in the region of the spray.

3.4. Jettison device

3.4.1 The jettison device shall be so arranged that it is possible to check on the ground that it is properly closed prior to take-off.

3.4.2 The design of the jettison device shall be such that, after setting, jettison can only be effected by the operation of the cockpit control lever. There shall be no risk of inadvertent operation at any time during flight.

3.5. Controls

3.5.1 A single control lever readily accessible to the pilot shall be used to operate both streaming and jettison mechanisms and as a standard method this should preferably be so arranged that the streaming operation follows when the control is pushed forward and the jettison when the control is pulled backward. Arrangements shall be made so that it is not possible to reverse the sequence of operations. Mechanical operations should be employed for both controls, but where it is impracticable the Contractor shall submit his proposed methods to the Director, R.A.E. for consideration.

3.5.2 Cockpit instructions for the operation of the streaming and jettison mechanisms should in general be confined to the words "STREAM" and "JETTISON".

4. Strength

4.1 The aeroplane structure and parachute installation shall comply with the requirements of paras.4.5. to 4.7.2. for spin and recovery and also for the dive following recovery, under the following conditions.

4.2 Spin and recovery

4.2.1 Two cases shall be considered, the flat spin and the steep spin. In the absence of more precise data, the aeroplane and parachute cable attitudes and the aeroplane rate of descent shall be assumed as follows,-

Case	Rate of descent. ft/sec.	Aeroplane attitude.	Cable attitude
Flat spin	$\sqrt{840\ w}$	Chord line 60°to vertical	120°to chord line; and 45°to vertical in end elevation
Steep spin	$\sqrt{1680\ w}$	Chord line 30°to vertical	135°to chord line; and 15°to vertical in end elevation.

In the above, w = gross wing loading in lb./sq.ft.

In both cases the cable pull acts in a direction tending to give the aeroplane a nosedown pitching moment and a yawing moment opposing the spin.

4.3 Dive following recovery

4.3.1 The aeroplane shall be assumed to be in a dive with the parachute streamed parallel to the flight path.

4.4 Parachute pull

4.4.1 The parachute shall be assumed to exert a steady pull (lbs) after opening of $0.001\ D^2V^2$,

where D....ft.... Mouth diameter of parachute, and

V..ft/sec.. Indicated airspeed relative to parachute.

The parachute pull during opening is given by the pull after opening multiplied by a shock factor. Under normal circumstances the shock factor will not exceed 1.5 and this is the minimum to be assumed in calculating the opening load.

4.5 Strength of parachute and cable

4.5.1. The parachute, shroud lines and cable shall have an ultimate factor of not less than 1.5. under the loads occurring,-

(i) during and after opening of the parachute under the conditions of para.4.2., assuming V equal to the rate of descent of the aeroplane, and

(ii) under the conditions of para.4.3. assuming a steady parachute load equal to the maximum load at which any overriding

C

jettison device complying with the drawings will release the parachute and cable.

4.6 Overriding jettison device

4.6.1 The loads at which this device releases the cable and parachute shall satisfy the following requirements,-

(i) under the conditions of para.4.2., the release load shall be as near as possible to, but not greater than, 0.9. times the failing load of the parachute or cable, and shall not be less than 1.1 times the parachute opening load assumed in para. 4.5.(i), and

(ii) under the conditions of para.4.3., the release load shall not be less than the steady parachute load appropriate to a speed of 1.3 times the maximum rate of descent assumed in either of the spinning cases.+

4.7 Strength of aeroplane structure

4.7.1 Under the conditions of para.4.2., the whole aeroplane structure shall have an ultimate factor of not less than 1.5 under the combination of,-

(i) aerodynamic and inertia loads due to the appropriate steady spin conditions, and

(ii) a parachute pull equal to 0.9 of the maximum release load of any overriding jettison device complying with the drawings, and opposing inertia loads.

4.7.2 In addition, under the conditions of para.4.3. the whole aeroplane structure shall have an ultimate factor of not less than 1.5 under the combination of, -

---

+No upper limit for this condition is laid down, but it will be determined in practice by consideration of the maximum speed which can be reached, within a reasonably short space of time, in a dive with parachute attached. As a general recommendation, the speed required to operate the overriding jettison device in the diving condition should not exceed 1.7 times the maximum rate of descent assumed in either of the spinning cases.

(i) aerodynamic loads due to a dive at a speed which will produce a steady parachute pull equal to the maximum release load of any overriding jettison device complying with the drawings, and

(ii) the parachute pull of (i).

4.7.3 The requirements of paras.4.5. to 4.7.2. represent the minimum necessary to ensure safe operation. If these requirements are found to be not critical in the design of the aeroplane structure, consideration should be given to the provision, in the installation, of strength to cater for shock factors higher than the minimum **acceptable** value of 1.5.

4.8 Ground tests

4.8.1 Before flight trials, ground tests of the installation shall be carried out to the satisfaction of the D.G.A.I.

D

RELEVANT M.O.S. PUBLICATIONS

R.A.E. Technical Notes

No. Aero 1323 - Note on recovery from spins by tail parachutes

Standard Instruction Sheets

No. 54 - Typical installation and container for installation in front of fin of Anti-Spin Parachute

CHAPTER 717

COMPASS INSTALLATION

Note.- The subject matter of this Chapter was previously contained in D.T.D. Specification 1010 and has been amended to date (Res/Pubs/1815).

FS/37

Issued with A.L.No.16
(Re-issued with A.L.No.25)

CHAPTER 717

COMPASS INSTALLATION

General

1. This Chapter defines requirements for the installation of compasses in aeroplanes, to ensure satisfactory compass operation.

D.R.Compass

2. Only certain of the requirements in this Chapter are applicable to the Distant Reading Gyro Magnetic Compass. Further installation details for this type of compass can be found in Air Publication 1275B "The D.R.Gyro Magnetic Compass."

Position of Compass

3. Each compass shall be installed so that it can easily be read by the user under all normal conditions of the aeroplane in flight. In the case of bearing compasses, due regard should be given to arcs of vision.

4. The position for any compass of the "Parallel reading" or other course-setting type shall be such that the pilot can adjust the grid ring and clamping arm without difficulty during flight.

5. Subject to paras.3 and 4 above being satisfied, a position where parallax effect is reduced to a minimum should be selected.

6. Adequate clearance shall be allowed around the compass bowl to ensure that the movement of the bowl inside the container is unrestricted.

7. In the case of compasses mounted in standards, sufficient clearance shall be allowed around the standard to permit the unrestricted operation of clamping arm and tommy bar.

8. Easy access shall be provided to one fore-and-aft and one athwartships head, by which the setting of the compass standard and disc correctors are controlled. The movement of the adjusting key must not be restricted.

9. It may be necessary to allow space for the fitting of a vertical magnet holder immediately beneath the compass. The approximate dimensions of this holder are 2 1/16" x 6 3/4".

10. In no circumstances may the position or the type of compass decided by the mock-up conference be changed without authority in writing from D.T.D.

Reduction of compass interference

11. Tested equipment.- Careful attention must be paid to the positioning and design of structure and equipment containing magnetic material when in the vicinity of the compass. To this end, a large number of equipment items have been tested for the interference effect on an aeroplane compass and their minimum distances from the compass for satisfactory

Reduction of compass interference (cont'd)

compass operation are shown in the schedules at the end of this chapter. These items must not be placed closer than the minimum distance specified. In the case of the master unit of the D.R. compass the minimum distances shown in the schedules must be doubled.

12. Other items.- The requirements of the following three paragraphs apply only to those items not shown in the schedules.

13. No magnetic material may be positioned or rotated to within 18" of the compass.

14. The tests for compass interference defined in para. 32 shall be made on,-

(a) all fixed parts containing magnetic material or which have been subjected to electro-magnetic crack detection, or items of electrical equipment, which are within 36" of the compass,

(b) all moving parts containing magnetic material or which have been subjected to electro-magnetic crack detection, and are within 48" of the compass, (this distance is extended to 84" for retractable undercarriage parts), and

(c) engine mountings which have been subjected to electro-magnetic crack detection and are within 96" of the compass.

15. Those parts or items of equipment which produce a deviation more than 1° on any heading shall be either

(a) demagnetised to the satisfaction of D.G.A.I., or

(b) otherwise modified or moved to such a distance as will ensure that their effect on the compass will not exceed 1° of deviation.

16. Armour plate.- If it is desired to fit armour plate closer to the compass than the specified minimum distance shown in the schedules (see para.11), approval should be obtained from D.T.D. by reference through the Director, Admiralty Compass Observatory.

17. Electric cables.- Sufficient clearance must be allowed between the compasses and electric cables in the aeroplane to ensure that the magnetic fields set up by the current in the cables affect the compasses to a negligible degree only. Normally single electric cables or multiple cables carrying unbalanced currents should not be used in the vicinity of a compass.

AP 970 Design Requirements for Aeroplanes AL25-07-19460801 OCR.pdf

Reduction of compass interference (cont'd)

18. Inter-compass distances.- The distances in inches, between centres of compasses shall not be less than those shown in Table I.

Alignment of compasses and correctors

19. The type of corrector or mounting used with each British service type compass is shown in Table II.

20. All compasses or their standards and all correctors shall be attached rigidly to the aircraft by means of their securing lugs so that when the aircraft is in its normal flying attitude,

(i) the locating plane of each instrument is horizontal or vertical, according to the type of instrument concerned,

(ii) the vertical plane through the fore and aft line of each instrument is parallel to the vertical plane through the fore and aft axis of the aircraft.

21. No.1 and No.3 correctors shall be mounted on the compass bracket with their fixing lugs towards the compass. The vertical centre lines of each compass and its corrector shall be coincident. The correctors should not be separated from the compass by more than $\frac{1}{8}$ inch.

Analysis of deviations

22. A preliminary swing on eight points should be made and the value of co-efficient A, B, C, D and E calculated.

23. Swings should also be made to determine the effect of:-

(a) Retraction of undercarriage.
(b) Depression of flaps and bomb doors.
(c) Change in attitude of aircraft.
(d) The effect of switches and electrical components.
(e) The effect of firing guns on at least three different headings.

Permissible limits

24. Before correction.- The deviation at the compass position caused by the aircraft's horizontal magnetism should not exceed that which can be corrected by the disc type corrector. This figure will normally be found to be in the region of 40° to 45°.

25. Deviation due to (a) (b) (d) and (e) in para.23 shall not exceed 2°.

Permissible limits (cont'd)

26. After correction.- The deviations on the direct reading compass should not normally exceed 2° after correction.

27. For the D.R.Compass the limits should not exceed half of those for the direct reading type.

Correcting action

28. Where the limitations referred to in para.24-27 above are not complied with, either repositioning of the compass or equipment (including electrical components and wiring where appropriate) or demagnetisation of components must be carried out.

29. Deviation of more than 3° due to (c) in para.23 should be corrected by vertical corrector magnets.

30. Directive force.- In new type aeroplanes when it is anticipated that owing to the presence of soft iron the directive force at the compass position is likely to be impaired, the lambda experiment should be carried out. If the loss in resultant directive force is more than 25% the question of repositioning of the compass or rearrangement of the armour must be considered.

Deviation cards

31. Card holders suitable for A.M.Form 316 shall be provided at each appropriate compass position.

Tests for compass interference

32. Tests for compass interference shall be carried out by placing a compass (e.g. a P.4) on a suitable surface well away from any magnetic material and marking a line on this surface passing due E - W through the compass pivot. This line should be scaled in inches on either side of the compass. The test piece shall be placed symmetrically over this line at the distance from the compass which it will have when assembled on the aeroplane. The test piece shall now be rotated slowly through 360° and the compass deviation noted.

+ From A.D.M.410.
FS/39

TABLE I

MINIMUM DISTANCES BETWEEN COMPASSES

Compass type	Minimum distances (inches)															
	P4	P4a	P6	P7	P8	P9	B/S "D"	02	02a or 02b	SO2 or SO2b	06 or 06a	Astro Mk. II	N1	Gyro Fluxgate	D.R. Gyro Mag. Master Unit	Pioneer Magnesyn
P4	25															
P4A	25	25														
P6	25	25	25													
P7	34	34	34	34												
P8	25	25	25	34	25											
P9	25	25	25	34	25	25										
B/S "D"	27	27	27	34	27	27	27									
02	25	25	25	34	25	25	27	25								
02a or 02b	25	25	25	34	25	25	27	25	25							
SO2 or SO2b	25	25	25	34	25	25	27	25	25	25						
06 or 06a	25	25	25	34	25	25	27	25	25	25	15					
Astro Mark II	12	12	12	12	12	12	12	12	12	12	12	-				
N1	25	25	25	34	25	25	27	25	25	25	25	12	18			
Gyro Fluxgate	25	25	25	34	25	25	27	25	25	25	25	12	18	9		
D.R. Gyro Mag. Master Unit	30	30	30	34	30	30	30	30	30	30	30	12	30	30	30	
Pioneer Magnesyn	25	25	25	34	25	25	27	25	25	25	25	12	25	25	30	24

AP 970 Design Requirements for Aeroplanes AL25-37 19460801 OCR.pdf

TABLE II

CORRECTORS OR MOUNTINGS USED WITH BRITISH SERVICE TYPE COMPASSES

Type of compass	Type of corrector or mounting
P.4.	No.1 or No.3 adjustable corrector
P.4.A.	" "
P.6.	" "
P.8.	" "
P.9.	" "
B/S."D"	No.2 adjustable corrector
0.2.	0.5. Standard (incorporating an adjustable corrector)
0.2.A.	" " "
0.2.B.	" " "
S.0.2.	" " "
S.0.2.B.	" " "
0.6.	0.6. Holder
0.6.A.	" "
Astro Mk.II	0.5.A. Standard (no corrector)
P.7.	An adjustable corrector is part of the compass
D.R.	" " "
N.1.	A corrector box is part of the compass

SCHEDULE 1 - ARMAMENT

MINIMUM DISTANCES FROM COMPASS

Stores Ref.	Item of equipment	Clearance. (Inches)	Remarks
12A/	Bomb 20 lb.	17	
12A/410	" 40 lb. G.P. Mk.III	18	
12A/	" 100 lb. A.S.	28	The clearances required with any of these items is the same for all "Marks" of the type of bomb in question
12A/	" 120 lb. G.P.	50	
12A/	" 250 lb. A.S. or S.A.P.	38	
12A/	" 250 lb. G.P.	56	
12A/	" 500 lb. G.P.	60	
12A/	" 500 lb. S.A.P.	41	
12A/	" 500 lb. M.C.	24	
12A/	" 1000 lb. G.P.	51	
12A/1653	" 1,900 lb. G.P.	66	
12A/	" 2,000 lb. A.P.	61	
12A/790	" 2,000 lb. H.C. Mk.I	108	
12A/933	" 4,000 lb. H.C. Mk.III	84	
12B/198	Bomb, practice, aircraft, Mk.I 11½ lb. filled.	11	
9/3571	Bombsight, automatic, Mk.IIA	18	
11A/559	Carrier, light series, type E.M. Mark III.	18	
11A/446	Carriers, light series, type E.M., electro magnetic unit for	18	
11A/606	Carrier, universal, Mark II	18	
11A/1108	Carrier, universal, Mark III	18	
11A/1015	Carrier, standard (Avro)	18	
11A/1198	Carrier, bomb, 2000 lb. Mark II	18	
11A/2568	Carrier, bomb, A.V.Roe steel type Mark II	36	
12A/776	Depth charge 850 lb. Mk.VIII	30	
12A/783	Depth charge 450 lb. Mk.VII	60	
9/2201	Director, type F, gyro angle power unit.	10	Energised.
9/2198	Director, type F, computor	14	Energised.
9/2202	Director, type F, contactor box	30	Energised.
5D/1065	Distributor, bomb, 32 point	12	
5D/664	Distributor, bomb, 16 point	12	
5D/1196) 5D/1197)	Distributor, bomb, 2 way	24	
12E/187	Flare, Reconnaissance, 4.5" Mk.II	24	
7H/	Gun, Browning .303"	20	
	.303" Vickers G.O. gun	48	with 100 round magazine.
	.303" Vickers G.O. gun	12	magazine on stowage peg.
107K/92	Gun, Browning .5" model M.G.53-2	28	The measurement is made with the breech of the gun nearest to the compass.
	.50" Browning gun, Type MZ	60	
	20 mm Hispano gun Mk.I	72	Magazine or belt feed.
	20 mm Hispano gun Mk.II	72	
7G/783	20 mm. Hispano No.1	108	
7G/786	20 mm. Hispano No.2	108	
7G/963	20 mm. Hispano No.3	108	
7G/971	20 mm. Hispano No.4 Mark V.	108	
7G/924	Mechanism, belt feed. Mk.V - Left hand	20	
7G/925	Mechanism, belt feed. Mk.V - Right hand	20	
7G/983	Mechanism, belt feed, Mk.V+ - Left hand	20	

E

Chapter 717
Amended on 1st Nov. 1945
(Re-issued on 1st Feb. 1946)

SCHEDULE 1 - ARMAMENT (CONT'D)

MINIMUM DISTANCES FROM COMPASS

Stores Ref.	Item of Equipment	Clearance. (Inches)	Remarks
7G/984	Mechanism, belt feed, Mk.V+ - Right hand.	20	
7B/1369	Photoflash discharger, 1½"	30	
7B/655	Pistol, signal 1½", No.3, Mk.I	12	
7B/708	Pistol, signal 1½", No.3, Mk.II	15	
7B/810	Pistol, signal 1½", No.4, Mk.I	12	
7B/871	Pistol, signal 1", No.2, Mk.V	12	
7G/988	20 mm. Pneumatic firing unit. Mk.III.	36	
105D/192, /36 & /47	20 mm. Magnavox firing solenoid	20	
105D/29 & /37	5" Magnavox firing solenoid	18	
5D/1358	5" Maxifort firing solenoid	15	
5B/1382	20 mm. Trip electric firing unit	24	
11A/1422	Release Unit E.M., type F	18	
	Sight, aircraft torpedo, travelling lamp.	15	On "B" bracket.
	Sight, aircraft torpedo, moving mirror.	6	
5D/632	Switch, 4 way Auto Selector	12	
5D/1062) 5D/1077)	Switch, firing Interlock	12	
5D/946	Switchbox, selector, type H	12	
12E/44	Torpedo Mark VIII, 18 inch	64	
150B/926	Track booster, for Gun Turret with Dunmore Motor Mark II.	24	
8B/2522	Gyro Gun Sight Mark II, Series 1	15	
8B/2608	" " " " " " 2	15	
8B/2669	" " " " " " 3	15	
12D/658	Flame floats No.3, Mk.I. (crates of nine)	50	

SCHEDULE 1 - ARMAMENT

MINIMUM DISTANCES FROM COMPASS

Stores Ref.	Item of equipment	Clearance. (Inches)	Remarks
12A/	Bomb 20 lb.	17	
12A/410	" 40 lb. G.P. Mk.III	18	
12A/	" 100 lb. A.S.	28	The clearances required with any of these items is the same for all "Marks" of the type of bomb in question
12A/	" 120 lb. G.P.	50	
12A/	" 250 lb. A.S. or S.A.P.	38	
12A/	" 250 lb. G.P.	56	
12A/	" 500 lb. G.P.	60	
12A/	" 500 lb. S.A.P.	41	
12A/	" 500 lb. M.C.	24	
12A/	" 1000 lb. G.P.	51	
12A/1653	" 1,900 lb. G.P.	66	—
12A/	" 2,000 lb. A.P.	61	
12A/790	" 2,000 lb. H.C. Mk.I	108	
12A/933	" 4,000 lb. H.C. Mk.III	84	
12B/198	Bomb, practice, aircraft, Mk.I 11½ lb. filled.	11	
9/3571	Bombsight, automatic, Mk.IIA	18	
11A/559	Carrier, light series, type E.M. Mark III.	18	
11A/446	Carriers, light series, type E.M., electro magnetic unit for	18	
11A/606	Carrier, universal, Mark II	18	
11A/1108	Carrier, universal, Mark III	18	
11A/1015	Carrier, standard (Avro)	18	
11A/1198	Carrier, bomb, 2000 lb. Mark II	18	
11A/2568	Carrier, bomb, A.V.Roe steel type Mark II	36	
12A/776	Depth charge 850 lb. Mk.VIII	30	
12A/783	Depth charge 450 lb. Mk.VII	60	
9/2201	Director, type F, gyro angle power unit.	10	Energised.
9/2198	Director, type F, computor	14	Energised.
9/2202	Director, type F, contactor box	30	Energised.
5D/1065	Distributor, bomb, 32 point	12	
5D/664	Distributor, bomb, 16 point	12	
5D/1196) 5D/1197)	Distributor, bomb, 2 way	24	
12E/187	Flare, Reconnaissance, 4.5" Mk.II	24	
7H/	Gun, Browning .303"	20	
	.303" Vickers G.O. gun	48	with 100 round magazine.
	.303" Vickers G.O. gun	12	magazine on stowage peg.
107K/92	Gun, Browning .5" model M.G.53-2	28	The measurement is made with the breech of the gun nearest to the compass.
	.50" Browning gun, Type MZ	60	
	20 mm Hispano gun Mk.I	72	Magazine or belt feed.
	20 mm Hispano gun Mk.II	72	
7G/783	20 mm. Hispano No.1	108	
7G/786	20 mm. Hispano No.2	108	
7G/963	20 mm. Hispano No.3	108	
7G/971	20 mm. Hispano No.4 Mark V.	108	
7G/924	Mechanism, belt feed. Mk.V - Left hand	20	
7G/925	Mechanism, belt feed. Mk.V - Right hand	20	
7G/983	Mechanism, belt feed, Mk.V+ - Left hand	20	

E

SCHEDULE 1 - ARMAMENT (CONT'D)

MINIMUM DISTANCES FROM COMPASS

Stores Ref.	Item of Equipment	Clearance. (Inches)	Remarks
7G/984	Mechanism, belt feed, Mk.V+ - Right hand.	20	
7B/1369	Photoflash discharger, 1½"	30	
7B/655	Pistol, signal 1½", No.3, Mk.I	12	
7B/708	Pistol, signal 1½", No.3, Mk.II	15	
7B/810	Pistol, signal 1½", No.4, Mk.I	12	
7B/871	Pistol, signal 1", No.2, Mk.V	12	
7G/988	20 mm. Pneumatic firing unit. Mk.III.	36	
105D/192, /36 & /47	20 mm. Magnavox firing solenoid	20	
105D/29 & /37	5" Magnavox firing solenoid	18	
5D/1358	5" Maxifort firing solenoid	15	
5B/1382	20 mm. Trip electric firing unit	24	
11A/1422	Release Unit E.M., type F	18	
	Sight, aircraft torpedo, travelling lamp.	15	On "B" bracket.
	Sight, aircraft torpedo, moving mirror.	6	
5D/632	Switch, 4 way Auto Selector	12	
5D/1062) 5D/1077)	Switch, firing Interlock	12	
5D/946	Switchbox, selector, type H	12	
12E/44	Torpedo Mark VIII, 18 inch	64	
150B/926	Track booster, for Gun Turret with Dunmore Motor Mark II.	24	
8B/2522	Gyro Gun Sight Mark II, Series 1	15	
8B/2608	" " " " " " 2	15	
8B/2669	" " " " " " 3	15	
12D/658	Flame floats No.3, Mk.I.	50	

SCHEDULE 2 - ARMOUR PLATE.

MINIMUM DISTANCES FROM COMPASS

Spec.	Size of plate	Thickness						Maker
		4 mm	6 mm	8 mm	9 mm	12 mm	16 mm	
I.T.60	2' x 1'				35"	37"		Beardmore
"	2' x 2'				39"	40"		"
"	3' x 2'				51"	55"		"
"	3' x 3'			42"		48"	48"	E.S.C. One face carburized
I.T.70	2' x 1'	24"	24"		30"			Beardmore
"	2' x 2'	30"	30"		36"			"
"	3' x 2'	36"	45"		54"	60"		"
"	3' x 3'	60"						"
"	4' x 3'				60"			"
"	6' x 4'				60"			"
"	2'6" x 1'6"				48"			"
"	3' x 2'				42"			Hadfields
"	2'8" x 2'2"					54"		"
"	3'2" x 1'7"	36"						"

FS/75

SCHEDULE 3 - ELECTRICAL

MINIMUM DISTANCES FROM COMPASS

Stores Ref.	Item of Equipment	Clearance. (Inches)	Remarks
5U/2731	Alternator (Met-Vick), Type W, 115 volt.	48	
5U/2960	Alternator, Type W.Z.	42	
	Ammeter, model 606, 0-60	24	
5U/1630	Ammeter, type "B", 0 - 5	24	
5U/1631	" " " 0 - 10	24	
5U/1632	" " " 0 - 50	24	
5U/1633	" " " 20 - 0 - 20	24	
5U/1634	" " " 30 - 0 - 30	24	
5U/1635	" " " 50 - 0 - 50	24	
5U/1694	" " " 10 - 0 - 10	24	
	Cables		See R.A.E. report E.& I. 1206.
5C/2853	Circuit breaker, type D	30	
	Connector box G.E.C. type AGC2	8	Compass in line with diagonal of box.
5C/584	Cut-out, accumulator, 12 volt, type A	33	
5C/721	Cut-out, accumulator, 24 volt, type B	33	
5C/1256	Cut-out, accumulator, 12 volt, type C	54	
5C/934	Cut-out, accumulator, 24 volt, type C	54	
+ 5C/1256)	When fitted with screening cover		
5C/934)	5C/2322	27+	
5C/1615	Cut-out, accumulator, 12 volt, type D	54	
5C/1616	Cut-out, accumulator, 24 volt, type D	54	
+ 5C/1615)	When fitted with screening cover	27+	
5C/1616)	5C/2323		
5C/1476	Cut-out, accumulator, 12 volt, type E	33	
5C/1477	Cut-out, accumulator, 24 volt, type E	33	
5C/1478	Cut-out, accumulator, 12 volt, type F	54	
5C/1479	Cut-out, accumulator, 24 volt, type F	54	
+ 5C/1478)	When fitted with screening cover		
5C/1479)	5C/2322	27+	
5C/1965	Cut-out, accumulator, 24 volt, type G	36	
5C/2854	Cut-out, Type J	36	
	Cut-out, Struthers Dunn, 24 volt. Type Nos. (N.A.F.1116 - Model 4. (C.X.D.1535 - Model 3.	45	
5U/520	Dynamotor Type D	24	
5U/2702	Regulator and cut-out, Type A.	34	
	Reflector for D.I. lamps, virtreous enamel	6	
5C/870	Suppressor, radio interference, type B	20	
5C/2882	Suppressor, radio interference, type F2	12	
5C/1614	Suppressor, radio interference, type W	30	
5C/3001	Suppressor, radio interference, type W2	40	
5C/2605	Suppressor, radio interference, type Y	42	
5C/2741	Suppressor, radio interference, type Y2	42	
5C/372	Switchbox identification No.2 Mk.III	Nil	
5C/649	Switch, magnetic relay, type B, 12 volt	24	
5C/723	Switch, magnetic relay, type C, 24 volt	24	
5C/846	Switch, magnetic relay, type D, 12 volt	24	
5C/862	Switch, magnetic relay, type F, 24 volt	24	

+ The screening covers should only be used when the minimum distance of 54" cannot possibly be obtained.

G

SCHEDULE 3 - ELECTRICAL (CONT'D)

MINIMUM DISTANCES FROM COMPASS

Stores Ref.	Item of equipment	Clearance. (Inches)	Remarks
105U/738	Switch, battery relay, Leece Neville type (24 V., 200 amp.)	36	
5U/2712	Voltage booster, type I	42	
5U/3033	" " type II	42	
5U/899	Voltage regulator, carbon pile type A	18	
5U/2844	Voltage regulator, carbon pile, type XXIII	39	
5U/2899	" " " "type XXXII	36	
5U/1013	Voltage regulator, type C	36	
5U/1024	Voltage regulator, type D	36	
5U/191	Voltage regulator, type F.12	36	
5U/192	Voltage regulator, type F.24	36	
5U/215	Voltage regulator, type H	36	
5U/522	Voltage regulator, type J	36	
5U/2573	Voltage regulator, type J2	36	
5U/2166	Voltage regulator, type XXII	36	18" when μ metal screen is used
5U/2844	Voltage regulator, type XXIII	42	
5U/2899	Voltage regulator, type XXXII	42	
	Voltage regulator, type XXXIII	33	
5U/2963	Voltage regulator, type XXXIV	36	
5U/3034	Voltage regulator, type XXXVII	36	
105U/359	Voltage regulator, 3GBD, 2B11	30	
105U/348	Voltage regulator, Eclipse 15 V, N.F.2	20	
5U/1636	Voltmeter, type C. 0 - 20	24	
5U/1693	Voltmeter, type C. 0 - 40	24	
5U/4130	Rotary convertor, type VIII	45	

SCHEDULE 4 - INSTRUMENT

MINIMUM DISTANCES FROM COMPASS

Stores Ref.	Item of equipment	Clearance (Inches)	Remarks
	Automatic Control Apparatus (Mk.IV)		
6H/1161	Air intake throttle	Nil	
6H/551	Cable guide follow up	Nil	
6H/571	Clutch lever	Nil	
6H/301	Control cock	Nil	
6H/683	Oil reservoir	4	
6H/719	Rudder and elevator unit	20	
6H/1030	Servo motor (rudder, aileron and elevators).	14	
6H/390	Steering control	5	
6H/331	Test cock	Nil	
6H/1350	Turn regulator (12v)	32	Solenoid continuously in operation.
	Automatic Control Apparatus		
106J/696	Auto pilot servo, Minneapolis Honeywell new type G.1020	45	
106J/643915	Directional control unit, Sperry (A.3)	12	
	Camera		
14A/	Camera F.24	18	
14A/3094	Camera, remote control, type 48.	(36 ((42	Installed in upright position. When in same horizontal plane as compass.
14A/943	Control, camera remote, electrical, type 35 No.1	26	
14A/535	Motor, camera, driving type "A"	18	
	Compass, D.R.Mk.I		
	C.S.B.S. Repeater type B	18	
6A/743	Observers repeater Mk.I	6	Automatic Telephone and Electrical Co.Ltd.
6A/742	Pilots repeater Mk.I	6	" " "
6A/1056	Variation corrector setting Mk.I	15	" " "
	Desynn units		
6A/2131 6A/2132 6A/2133 6A/2134	Transmitter, indicator, position, type A) Transmitter, indicator, position, type B) Transmitter, indicator, position, type C) Transmitter, indicator, position, type D)	8	
	Magnesyn compass		
106A/867	Indicator unit	5	
106A/1110	Air Speed Indicator Type F.I.No.A.C.42/847	5	
106A/1249	Inverter for Fluxgate Compass - Switched off	18	
	- Switched on	30	
	Miscellaneous		
10A/10985	Contactor master remote	16	Venner Time Switches Ltd. The clearance required is the same for (a) any straight length, (b) a 7-ft. length in a coil 10" in diameter.
6A/	Drive, Flexible	11	
6A/	Gauge, fuel contents, electrical, Mk.IV indicator	6	
	Gauge, fuel contents, electrical	8	Liquidometer
	Gauge, fuel contents, hydraulic	Nil	Liquidometer
	Gauge, fuel contents, free float, Mk.IIIA	15	Simmonds Accessories.

H

SCHEDULE 4 - INSTRUMENT (CONT'D)

MINIMUM DISTANCES FROM COMPASS

Stores Ref.	Item of equipment	Clearance. (Inches)	Remarks
6A/442	Indicator, engine speed, electrical Mk.IIC.	14	
6A/716	Indicator, engine speed, electrical Mk.IIF.	14	
6A/573	Indicator, engine speed, electrical Mk.IIIB.	18	
6A/776 & 7	Indicator, engine speed, electrical Mk.IVA.	12	
6A/887 & 8	Indicators, engine speed, electrical Mk.IVA.	less than 4	Kelvin Bottomley and Baird.
6A/778 & 9	Indicators, engine speed, electrical Mk.IVB.	Nil	The Record Electric Co. Ltd.
	Indicators, engine speed, electrical Western model 545	13.5	
	Indicator, flap edgewise, electrical	Nil	With magnetic shield fitted Smiths Instruments.
6A/2136	Indicator, position, type A.No.1	12	
6A/2138	Indicator, position, type B.No.1	12	
6A/2140	Indicator, position, type B.No.2	15	
6A/2144	Indicator, position, type C.No.1	15	
6A/2146	Indicator, position, type C.No.2	15	
6A/2148	Indicator, position, type C.No.3	15	
6A/2150	Indicator, position, type C.No.4	15	
6A/2200	Indicator, position, type C.No.5	15	
6A/2142	Indicator, position, type O.No.1	12	
6A/675	Indicator, turning, Mk.IA type B	Nil	
9/579	Indicator, steering, electrical Mk.I	10	
6A/2151	Link adjustable	9	
6A/155	Thermometer, transmitting, Mk.IA		Both oil thermometers and water thermometers.
	Indicator	1	
	Tube, capillary bulb straight	Nil	
	" " " coiled	4	Coil of 6" diameter
6A/	Thermometer, air, oil, and radiator, electrical, Mk.I indicator	12	
6A/620	Thermometer, cylinder temperature, Mk.I indicator.	11	Western Electric Co. Ltd.
	Navigation		
6B/249	A.M.U. Mk.I.	18	
6B/298	A.M.U. Mk.II.	18	
6B/248	A.P.I. Mk.I.	18	) If fitted with repeater
6B/278	A.P.I. Mk.IA.	18	) type B (for electrical transmission) required clearance is 20".

SCHEDULE 5 - MISCELLANEOUS

16G/	Anchor, ground, Felixstowe, Mk.XIIA	25
	Drogue, with tripping gear	7
27C/1919	Emergency pack, type 5	39
27C/1931	Emergency pack, type 7	53
6F/158	Pipe, voice, type B	7½
6D/432	Portable oxygen set	36
	Metal freight boxes for magnetos	78
6D/483	Oxygen cylinder, type C	30

SCHEDULE 6 - POWER UNIT

MINIMUM DISTANCES FROM COMPASS

Stores Ref.	Item of equipment	Clearance. (Inches)	Remarks
5U/516	Control box for de-icing pump	21	
5U/2951	Croydon motor, type A/20/S31	36	
5U/3002	De-icing pump	21	
5U/3001	Fuel pump, electrically driven, type BP.1 Mk.II (24v)	26	
5U/2609	Fuel pump, electrically driven, type BP.2 Mk.II (12v)	30	
5U/2362	Generator, Type U.O.	30	
5U/3420	Generator, engine driven, Type LXZ	30	
5C/561 & 2	Generator, engine driven, D.C. Type A	15	
5C/774 & 5	Generator, engine driven, D.C. Type C	15	
5U/736 & 7	Generator, engine driven D.C. Type E	15	
5U/975 & 6	Generator, engine driven, D.C. Type K	30	
5U/189) 5U/190)	Generator, engine driven, D.C. Type KX	33	
	Generator, engine driven, D.C. Type KZ1	33	
	Generator, engine driven, D.C. Type KZ2	33	
5U/187 & 8	Generator, engine driven, D.C. Type LX	30	
	Generator, engine driven, D.C. Type LZ	30	
5U/1184 & 5	Generator, engine driven, A.C. Type Q	55	
5U/1270 & 1	Generator, engine driven, A.C. Type R	100	
5U/1272	Generator, engine driven, A.C. Type S.	95	
5U/348 & 9	Generator, engine driven, A.C. Type U	130	
5U/2617	Generator, engine driven, A.C. Type U2 (Newton)	24	
5U/350	Generator, engine driven, A.C. Type V	130	
5U/1186 & 7	Generator, engine driven, dual purpose Type QC	55	
5U/1188 & 9	Generator, engine driven, dual purpose Type QE	55	
5U/1273 & 4	Generator, engine driven, dual purpose Type RC.	100	
5U/1277 & 8	Generator, engine driven, dual purpose Type RE	100	
5U/1279 & 80	Generator, engine driven, dual purpose Type RH	100	
5U/1546 & 7	Generator, engine driven, dual purpose Type RK	100	
5U/193 & 4	Generator, engine driven, dual purpose Type RLX	100	
5U/419 & 20	Generator, engine driven, dual purpose Type TKX	30	A.C. field must be correctly connected otherwise clearance is 48". I

SCHEDULE 6 - POWER UNIT (CONT'D)

MINIMUM DISTANCES FROM COMPASS

Stores Ref.	Item of equipment	Clearance. (Inches)	Remarks
5U/421	Generator, engine driven, dual purpose Type UKX.	36	
5U/2402	Motor alternator, Type 4	60	
5T/386	Motor generator; Type KX/K2	33	
5U/2399	Rotary converter; Type 2	54	
5T/396	Rotary converter set; Type 5	24	

SCHEDULE 7 - RADIO

MINIMUM DISTANCES FROM COMPASS

Stores Ref.	Item of equipment	Clearance. (Inches)	Remarks
10BB/867	Aerial, type 90	12	
10B/13203	Aerial, type 134	22	For T.R.1378
10B/13204	Aerial, type 135	22	For T.R.1378
110QB/2	AYD - Indicator	12	
110FB/19	- Limit switch	12	
110DB/22 or 23	- T.R. Unit ARI.5185	72	
	Choke box, type 1	48	
5C/1268) 5C/1269)	Control panel, type 3	24	
5U/199	Control panel, type 4	24	
5U/351	Control panel, type 5 (12v)	24	
5U/363	Control panel, type 5 (24v)	24	
	Control panel, type 6	36	
10L/11841	Control unit, type 6	6	For R.1124A/R.1125A
10LB/84	Control unit, type 81	8	Mark IVA
10LB/89	Control unit, type 87	8	Mark V
10LB/6004	Control unit, type 404	32	
10LB/6102	Control unit, type 477	18	
10LB/6136	Control unit, type 483	24	For Rebecca
10L/62	Control unit, type 137A	Nil	
10L/63	Control unit, type 137B	Nil	For R.1324
10L/64	Control unit, type 137C	Nil	
10L/61	Control unit, type 149	6	For T.R.1375 and T.R.1375A
10L/13010	Control unit, type 179	4	For T.R.1378
10L/22	Controller, electric, type 4	7½	
10K/13128	Electrode transformer, type 42	6	For T.R.1378
10DB/293	I.F.F. Mk.II (12v)	33	
10DB/444	I.F.F. Mk.II (24v)	33	
10DB/428	I.F.F. Mk.III (12v)	33	
10DB/429	I.F.F. Mk.III (12v)	33	
10QB/5	Indicator unit, type 6	27	Mark II
10QB/24	Indicator unit, type 6A	27	Mark II
10QB/45	Indicator unit, type 6B	20	Mark II
10QB/32	Indicator unit, type 20	20	Mark IV
10QB/57	Indicator unit, type 30	25	Mark IVa see below
10QB/58	Indicator unit, type 40	14	Mark IVA
10QB/59	Indicator unit, type 41	25	Mark V
10QB/60	Indicator unit, type 42	14	Mark V
10QB/6046	Indicator unit, type 187	60	
10QB/6058	Indicator unit, type 162B	60	
10QB/6169	Indicator unit, type 216	60	
10QB/6187	Indicator unit, type 184A	60	
10QB/6301	Indicator unit, type 216A	60	
10Q/9	Indicator unit, type 60A	36	
10Q/10	Indicator unit, type 60B	36	For R.1324
10Q/11	Indicator unit, type 60C	36	
10Q/13000	Indicator unit, type 62	44	For R.1355
	Indicator unit, ARI.5214	24	
110QB/2	Indicator unit, ARI.5185	12	
110QB/30	Indicator unit, type ID30/APS.2.D.	24	
10Q/2	Indicator visual, type 1	27	
10Q/10863	Indicator visual, type 2	6	For R.1124A/1125A
10Q/13003	Indicator visual, type 7	17	For T.R.1378
10AB/6497	Junction Box 246	24	
10AB/6499	Junction Box 247	18	
10A/13369	Meter, altitude	10	For T.R.1375 and T.R.1375A

J.

SCHEDULE 7 - RADIO (CONT'D)

MINIMUM DISTANCES FROM COMPASS

Stores Ref.	Item of equipment	Clearance. (Inches)	Remarks
10DB/249	Modulator unit, type 13	20	Mark IV)
10DB/320	Modulator unit, type 20	20	Mark IVA) see below
10DB/956	Modulator unit, type 64	60	
10DB/6311	Modulator unit, type 174	56	
10DB/6866	Modulator unit, type 187	60	
10K/11840	Power unit, type 5	48	
10K/11853	Power unit, type 12	48	
10K/36	Power unit, type 15	48	
10K/37	Power unit, type 16	48	
10K/1	Power unit, type 22)	27	To allow for variations in permeability of the steel cases, it is recommended that units be installed at a distance of not less than 36" from the compass where this is possible.
10K/2	Power unit, type 23)		
10KB/512	Power unit, type 224	48	
10KB/747	Power unit, type 280	48	
	Power unit, type 280A	48	
	Power unit, type 302	40	
10KB/6089	Power unit, type 567	40	
10KB/6178	Power unit, type 617	40	
10KB/6178	Power unit, type 617A	40	
10KB/6212	Power unit, type 634	40	
10KB/6318	Power unit, type 617B	40	
10K/17	Power unit, type 32	48	
10K/18	Power unit, type 33	48	
10K/19	Power unit, type 34	48	
10K/61	Power unit, type 34X	48	
10K/20	Power unit, type 35	78	
10K/13066	Power unit, type 35A	78	
10K/189	Power unit, type 82	48	
10K/190	Power unit, type 83	48	
10K/201	Power unit, type 87	24	
10K/238	Power unit, type 104	24	
10K/483	Power unit, type 141	34)	For R.1124A/R.1125A
10K/484	Power unit, type 142	34)	
10K/670	Power unit, type 179	30	For T.R.1375A
10K/13125	Power unit, type 222	36	For T.R.1378
10K/1543	Power unit, type 395	39	
110D/	Radio compass (Bendix) receiver, type BC.310B.	40	
110L/15	Radio compass (Bendix) remote control, type BC.311B.	10	
110A/169	Radio compass (Bendix) indicator, type 1-65-B	14	
110D/303	Radio compass (Bendix) receiver, type RA-1B	36	
110J/2	Radio compass (Bendix) remote control, MN28C	12	
110Q/1	Radio compass (Bendix) indicator, type 1N-4A	8	
110Q/12	Radio compass (Bendix MN26) indicator, type 1-81-A	6	
10DB/6060	Receiver R.3516	45	
10DB/6061	Receiver R.3515	45	
10DB/6306	Receiver R.3554	45	

SCHEDULE 7 - RADIO (CONT'D)

MINIMUM DISTANCES FROM COMPASS

Stores Ref.	Item of equipment	Clearance. (Inches)	Remarks
10DB/6322	Receiver R.3560	45	
10DB/6342	Receiver R.3553A	45	
	Receiver R.3640	45	
10QB/6130	Receiver 208	12	for Rebecca
10B/2654	Receiver, and	27	
110K/457	Dynamotor		
10DB/444	R.309	18	
10A/10380	T.1115	30	without motor generator
10D/10310	R.1116	15	without motor generator
10D/5	R.1124A	22	Beam approach
10D/6	R.1125A	24	Beam approach
10D/99	T.1154A	30	Mk.II: Aluminium case.
		32	Mk.II. Steel case. These cases will be marked "STEEL".
10D/196	T.1154B	30	Mk.II. Aluminium case.
		32	Mk.II. Steel case. These cases will be marked "STEEL".
10D/98	R.1155	20	Mk.II. Aluminium case.
		56	Mk.II. Steel case. These cases will be marked "STEEL".
10D/789	R.1324A	20	
10D/790	R.1324B	20	
10D/791	R.1324C	20	
10D/13032	R.1355	35	
10DB/56	R.3039	27	Mk.II) When mounted
10DB/110	R.3039A	27	Mk.II) with 10QB/5,
10DB/339	R.3039B	27	Mk.II) 10QB/24, or
10DB/350	R.3039C	27	Mk.II) 10QB/45 safe
10DB/351	R.3039D	27	Mk.II) distance is
10DB/405	R.3039E	27	Mk.II) 38".
10DB/57	T.3040	34	Mk.II
10DB/205	T.3040B	32	Mk.II
10DB/206	T.3040C	32	
10DB/240	T.3040D	34	
10DB/358	T.3040E	32	
10DB/250	T.3065	20	When mounted with 10DB/249, or 10DB/320, safe distance is 29".
10DB/251	R.3066	20	
10DB/347	R.3066A	20	Mk.IV.
10DB/338	T.3069	34	Mk.II.
10DB/339	R.3070B	27	Mk.II. When mounted with 10QB/5 or 10QB/24 safe distance is 38".
10DB/402	R.3074	20	
10DB/403	T.3075	20	
10DB/423	R.3080	33	Mk.IVA.
10DB/433	R.3085	33	Mk.IV.
10DB/488	R.3102	18	
10DB/484	T.3100	27	When fitted with modulator Type 29. Stores Ref.10DB/483.
10DB/716	T.3135	18	
10DB/717	R.3136	15	
10DB/1003	TR.3191	78	
10DB/4867	TR.3159	96	

K

SCHEDULE 7 - RADIO (CONT'D)

MINIMUM DISTANCES FROM COMPASS

Stores Ref.	Item of equipment	Clearance. (Inches)	Remarks
10DB/6071	TR.3519	78	
10DB/6077	TR.3523	75	
10DB/6865	TR.3594	128	
10DB/6917	TR.3555C	84	
10DB/6749	TR.3591	40	for Rebecca
10DB/6907	Time Base Unit	20	for Rebecca
10D/10470	T.R.9D	Nil	Aluminium case.
		26	Steel case. These cases will be marked "STEEL".
10D/11740	T.R.9F	Nil	Aluminium case.
		26	Steel case. These cases will be marked "STEEL".
10D/52	T.R.1143	60	
10D/12908	T.R.1375	24	
10D/13411	T.R.1375A	24	
10D/13514	T.R.1378	36	Capacity altimeter.
10FB/424	Switch Unit 92	40	
10FB/6006	Switch Unit 207	40	
10FB/6115	Switch Unit 207B	40	
10FB/6185	Switch Unit 249	40	
10FB/6285	Switch Unit 280	40	
10FB/6294	Switch Unit 282	40	
10VB/6005	Wave Form Gen. 27	42	
10VB/6056	Wave Form Gen. 34	42	
10VB/6057	Wave Form Gen. 35	42	
10VB/6215	Wave Form Gen. 52	42	
10VB/6041	Amplifier Unit A.3562	36	
	Amplifier Unit A.3586XI.	36	

SUPPLEMENTARY SCHEDULES

MINIMUM DISTANCES FROM COMPASS

Stores Ref.	Item of Equipment	Clearance (Inches)	Remarks
	Supplementary Schedule No. 1 - Armament		
	Supplementary Schedule No. 2 - Armour Plate		
	Supplementary Schedule No. 3 - Electrical		
5C/3189) 5C/3820)	Relay box - Loss of coolant indicator - Types 12v and 24v	18	
	Supplementary Schedule No. 4 - Instrument		
	Supplementary Schedule No. 5 - Miscellaneous		
	Supplementary Schedule No. 6 - Power unit		
	Supplementary Schedule No. 7 - Radio		
10QB/6078	Indicator, Type 198 A1 Mark VIII	45	
10KB/513	Power unit, Type 225 A1 Mark VIII	45	
10DB/6489	Receiver, A1 Mark VIII	30	
10DB/809	TR.3151	90	
10DB/8452	TR.3173C, Mark II Rebecca	55	
10LB/6010	Controller, Rebecca	15	
10QB/141	Indicator, Type 6E	55	
10BB/6006	ASV.XIII Transmitter	60	
10VB/6149	ASV.XIII Amplifier A.3644x1	40	
10QB/1206	ASV.XIII Indicator, Type 97	55	
10QB/8257	ASV.XIII Strobe Unit, Type 67 WW	15	
10VB/6123	ASV.XIII Oscillator, Type 231	15	
10AB/8843	ASV.XIII Smoothing Unit 26 w/w	12	
10DB/8293	ASV.XIII Function Box 300A	15	
ZA30714	Army Radio Set No.62, Mark II	39	

L

RELEVANT M.A.P. PUBLICATIONS

A.&.A.E.E. Reports

No.Res/175/1 - Lightning: Its effects upon compass deviation in aircraft

No.Res/175/3 - Changes during flight of deviation due to fuselages etc.

Air Publication

No. 1275B - "The D.R.Gyro Magnetic Compass"

R.A.E. Reports

No. E.L. 1206 - Compass interference from electrical components
(and Memo - Compass interference due to cables carrying currents)

No. E.L. 1289 - Compass interference on American aircraft

September, 1943
Issued with A.L.No.19
Re-issued with A.L.No.22
(Editorial changes only)

CHAPTER 718

PRESSURE CABINS

Note.- The subject matter of this chapter was previously contained in A.D.M.No.497.

FS/21

Issued with A.L.19

CHAPTER 718

PRESSURE CABINS

General

1. The requirements apply to all pressurised cockpits or cabins designed to maintain an internal pressure in excess of the external atmospheric pressure.

2. The differential pressure p lb/sq.in. between the pressure inside the cabin and the static pressure of the outside air forms the basis of the requirements. This value of p lb/sq.in. required at any altitude will be quoted in the Aeroplane Specification by means of a maximum value of p to be maintained above a stated height H_1, and a height H_2 below which p is assumed to be zero. Between H_1 and H_2, p shall be assumed to vary linearly.

Strength

3. The loads acting on the cabin are of three distinct types, -

(i) the pressure difference p lb/sq.in.,
(ii) the local external dynamic pressure distribution due to airflow over the outside of the cabin, and
(iii) inertia loads and loads carried to the cabin by the aeroplane structure, due to the flight loads on the aeroplane.

4. The pressure cabin and local structure shall have an ultimate factor of not less than 1.0 under the following combined loads at any height H, -

(i) a differential pressure of 1.5 p lb/sq.in. where p is the differential pressure appropriate to the height H, and
(ii) the fully factored loads arising from the external dynamic pressure, inertia loads and flight loads due to the most severe flight conditions obtainable at the height H.

5. The pressure cabin and local structure shall have an ultimate factor of not less than 2.0 under the following combined loads at any height H, - ,

(i) the differential pressure p lb/sq.in. appropriate to the height H, and
(ii) any external dynamic pressure distribution obtainable at the height H.

6. The strength of the pressure cabin and local structure shall have an ultimate factor of at least 1.5 under the conditions envisaged in para. 13.

Strength (Cont'd)

7. In calculating the external dynamic pressure and flight loads for the cases of paras. 4, 5 and 6, the following speed shall be used, -

Fighters ..... the speed obtained at the height H in a vertical dive starting from the maximum level speed at the operational ceiling, or the design diving speed, whichever is lower.

Bombers ..... as for fighters except that the angle of dive may be assumed to be 30°.

Design

8. Automatic pressure control.- The differential pressure shall be limited to the specified value of p lb/sq.in. (see para.2) by the provision of a suitable device which shall operate automatically. The flexibility of the device and its capacity shall be adequate to prevent the possibility of any sudden or gradual increase of pressure above p lb/sq.in.

9. Consideration shall be given to the case of the aeroplane ascending at its maximum rate of climb with the cabin blowers delivering air at their maximum rate appropriate to the altitude considered.

10. An automatic device shall be provided having sufficient capacity to prevent the static pressure of the air outside the cabin exceeding the pressure inside the cabin by more than ½ lb/sq.in. This device may be integral with that required by para.8.

11. The device shall incorporate a means of permitting the proof test of para.23 to be undertaken, such as by overriding the automatic operation of para.8. It shall not be possible for the aeroplane to fly while the overriding means is in operation. The arrangement shall also permit of ground testing of the pressure cabin at frequent intervals at the operating pressure of p lb/sq.in.

12. The device shall not permit the pressure to increase rapidly, either in the air or when carrying out the ground testing of para.11.

13. In deciding the most suitable capacity for the device required by para.10 consideration should be given to the condition arising when owing to enemy action or to failure of the cabin blowers, the cabin pressure drops to atmospheric pressure at the operational ceiling, following which the aeroplane dives steeply to low altitudes. In making this calculation the rate of descent may be assumed to be that defined in para. 7.

14. Two or more identical devices may be used to obtain sufficient capacity for the requirements of paras. 8 and 10.

B

15. Manual pressure control.- Where the value of p is 4 lb/sq.in. or greater, a manual control shall be provided to allow the differential pressure of the cabin to be reduced.

Contamination

16. Adequate precautions shall be taken to ensure, as far as possible, that damage by enemy action to, or breakdown in, any part of the blower equipment, hydraulic piping, cabin heating, or other services does not cause contamination of the air in the cabin by noxious or toxic fumes.

17. The intake(s) for the blower(s) must be positioned so that there is no possibility of contamination of the cabin air by exhaust gases.

Air conditions

18. Ventilation.- A system of ventilation shall be provided for use at low altitudes when the cabin is not under pressure, and shall be of adequate capacity to ensure that satisfactory ventilation ensues, under the climatic conditions called for in Chapter 105. Consideration should be given, in addition, to the fitting of a control for diverting the blower air from the cabin.

19. Heating.- The requirements of Chapter 105, in so far as they affect the heating of crew stations and equipment, shall be satisfied.

Pressure indicators

20. Altimeters.- An altimeter to indicate the equivalent cabin altitude shall be fitted in the cabin. Consideration shall be given to the use of a simple type of instrument such as the Mark XIID.

21. Audible indicators.- A warning device of the aural type shall be fitted and shall be readily audible to all occupants of the pressure cabin. It shall sound whenever the differential pressure falls by more than ½ lb/sq.in. below the value controlled by the automatic device required by para.8.

Tests

22. An external connection to the cabin with a standard 2" B.S.P. thread shall be provided as a coupling for ground testing.

23. Proof test.- Each cabin, when installed in the aeroplane and with all instruments and equipment fitted, shall be subjected, before delivery, to an internal pressure of 1.33 p lb/sq.in. above atmospheric pressure maintained for one minute and shall not suffer any permanent deformation.

24. Leakage test.- The leakage test will be defined in the Aeroplane Specification.

+ From J.A.C.Paper No.296.

RELEVANT M.O.S. PUBLICATIONS

Standardisation Design Memoranda

No. 17 - Warning horns
No. 52 - Altimeters
No. 53 - Rate of climb indicators

R.A.E. Reports

No. S.M.E. 3359 - Memorandum on the construction and operation of pressure cabin aircraft

CHAPTER 719

INSTALLATION OF INSTRUMENTS

Note:- The contents of this chapter have been re-positioned with the re-issue at A.L.35. Former paras. 15 to 21 inclusive now form the basis of Chapter 728, "Static and Pitot Pressure Sources."

A

Issued on 1st Mar. 1944
(Re-issued on 1st Feb. 1946)

CHAPTER 719

INSTALLATION OF INSTRUMENTS

1. Introduction

1.1 General requirements applicable to the installation of instruments in aeroplanes are given in this chapter.

2. Instrument panels

2.1 All aeroplane instrument dashboards or panels shall have the instruments rigidly attached, and shall be flexibly mounted to the aeroplane structure. Whenever practicable all instruments should be mounted from the back of the Instrument Board so that mounting flanges do not appear on the front.

2.2 Flexibility of the mountings

2.2.1. The flexibility of the mountings shall be such that the natural frequency of the complete panel when assembled in the aeroplane with all instruments connected up does not exceed 600 per minute in any direction, (i.e. the deflection of the mountings under the weight of the panel shall not be less than 1/10"). There shall be a clearance of $\frac{1}{4}$" all round the panel and resilient stops shall be provided.

2.3 Rigidity of panel

2.3.1. The panel itself shall be sufficiently rigid to ensure that it will not flex appreciably under the normal forces of gravity and acceleration to which it will be subjected. (On long narrow panels stiffening ribs may be employed to meet this requirement).

2.4 Standard flying instrument panels

2.4.1 The standard flying instrument panel shall be either,-

(i) flexibly mounted independently of the main instrument panel, or

(ii) incorporated in, or rigidly attached to the main instrument panel.

2.4.2 When the standard flying instrument panel is independently mounted, a clearance of $\frac{3}{8}$" shall be provided between it and the main instrument panel.

2.5 Connections to instruments

2.5.1. All connections to instruments on the panel shall be sufficiently flexible to allow compliance with para. 2.2. above, but where flexible pipes are used they shall be installed in a manner which will preclude any possibility of the pipe kinking.

2.6 Boost gauges

2.6.1 Provision shall be made for the fitting of boost gauges ($3\frac{1}{4}$" diameter) on aeroplanes sent to an Experimental Establishment.

3. Instrument lighting

3.1 Instrument dials with fluorescent markings shall be fitted in all cases except the following, -

(i) on the magnetic compass,

(ii) when the dial is installed in an isolated position where the U.V., or red flood-lighting cannot be employed or is not practicable, and

(iii) when fluorescent markings are not practicable owing to the construction of the instrument (e.g. A.P.I. counters).

3.2 Ultra-violet lighting

3.2.1 Ultra-violet lighting shall be provided for essential flying instruments at crew stations where preservation of night adaptation is required, and where the discernment of figures accurately is essential.

3.3 Red flood-lighting

3.3.1 Red flood lighting shall be provided, -

(i) for all other instruments and essential scales at the crew stations covered by para. 3.2,

(ii) for the instruments at all other crew stations, and

(iii) for the magnetic compass.

3.4 Lighting intensity

3.4.1 It shall be possible to control the

B

intensity of illumination of instrument dials, and rheostats provided for this purpose shall be capable of dimming the lights from full intensity to zero. On large installations the switching should be arranged so that it is possible, if desired, to illuminate the panel in the region of the blind flying instruments only.

3.5 Isolated instruments

3.5.1 Whenever practicable isolated instruments shall be illuminated by red flood-lighting and shall be provided with fluorescent dials. When the provision of such illumination is not practicable the instruments shall be provided with luminous dials.

3.6 Emergency lighting

3.6.1 An independent system of red flood-lighting operating on a single self-contained circuit and deriving its power from a separate accumulator shall be installed to illuminate the essential instruments in the cockpit. A master switch readily accessible to the pilot shall be installed to control the circuits. The master switch shall have a luminous marking which shall render it easily identifiable without being unduly obtrusive.

3.6.2 It is desirable that a "Wander" lamp consisting of a red flood light deriving its power from the main aeroplane supply and mounted on a spring loaded roller should be installed in the cockpit of large aeroplanes.

RELEVANT M.O.S. PUBLICATIONS

Aircraft Design Memoranda

No.500/20 - Accumulators

Standardisation Design Memoranda

No. 4 - Fuel contents gauges
No.38 - Filament lamps
No.52 - Altimeters
No.53 - Rate of climb indicators
No.63 - Engine speed indicators
No.70 - Clocks
No.73 - Direction indicators
No.74 - Air speed indicators

Airworthiness Technical Notes

No. 142 - Temperatures for design and testing of instruments and equipment for aeroplanes

Instrument Design Notes

No. 1 - General requirements

R.A.E. Technical Notes

No. Inst.804 - The insulation of aircraft instrument panels from vibration

CHAPTER 720

EMERGENCY DINGHY INSTALLATIONS

FS/55

Issued with A.L.No.24

CHAPTER 720

EMERGENCY DINGHY INSTALLATIONS

Introduction

1. The requirements of this Chapter govern the installation of multi-seater emergency dinghies in aeroplanes when such dinghies are called for in the aeroplane specification. When single seater dinghies are to be carried their installation will be associated with the lay-out of the parachute equipment and installational requirements for individual aeroplane types will be given in association with that equipment.

General

2. In order that full advantage may be taken of the accumulated knowledge gained from operational experience and contractors mock-up and installational trials, the DTD (RDS) should be consulted at an early stage in the design.

Basic requirement

3. The emergency dinghy installation shall be so designed that following the operation of either of the releases provided the dinghy and all equipment stowed with it will automatically be ejected from its compartment and that the dinghy will be launched the right way up in a position which will enable the crew to board it with the least possible risk of getting wet.

Positioning of equipment

4. The dinghy and its equipment together with the automatic inflation cylinder and Sea Rescue equipment shall be stowed in a single compartment. When the space available precludes full compliance with this requirement, and subject to the prior concurrence of the D.T.D.(R.D.S.), separate stowage may be provided for part of the Sea Rescue equipment.

5. Dinghy compartment.- The dinghy stowage should be located in the upper surfaces of the aeroplane but shall not be in an engine nacelle or in close proximity to exhaust pipes. Ejection of the dinghy from any of the under surfaces of the aeroplane is not acceptable.

6. The dinghy stowage may form part of an emergency exit in which case some positive means for removing the stowage shall be provided from both inside and outside the fuselage.

7. When arranging for the position of the dinghy compartment the following points shall receive full consideration:-

(i) Dinghies should be installed in such a position that escape of fuel or oil from the tanks occasioned by enemy action will not cause damage to the dinghy.

(ii) If possible advantage should be taken of the protection against damage by enemy action afforded by existing armour plate.

(iii) If a position in the fuselage is decided upon it should be readily accessible from the wing with the aeroplane in any attitude between that of level flight and 20° nose down.

(iv) Preference should be given to a position near a suitable emergency exit.

(v) The position should be such that damage of the stowage or controls during ditching due to an internal surge of water is minimised.

(vi) When necessary precautions shall be taken to protect the dinghy from being damaged or trapped by aerials or other projections during ejection.

Dinghy releases

8. Two independent release systems shall be provided. One of these shall be manually operated and the other electrically.

9. Electrical release.- In landplanes an approved automatically operating immersion switch shall be fitted so that when the aeroplane is ditched the requirement of para.3 will be met.

10. The immersion switch shall be positioned so that.-

(i) its inadvertent operation will not occur,

(ii) it is free from the danger of oiling up,

(iii) it is readily accessible for examination and cleaning, and

(iv) the daily continuity test of the dinghy electrical circuit can be carried out easily.

A position near the C.G. at a height just above the floor level is usually suitable.

11. In Seaplanes and Amphibians a manually operated electrical switch positioned conveniently for operation by the pilot shall be provided (but not an automatic immersion switch). A continuity test socket connected in parallel with the switch shall be installed to facilitate daily continuity tests.

12. Manual release.- Manual release of the dinghy shall be possible by application of a direct pull on a release handle connected to a cable operating mechanism.

Dinghy releases (cont'd)

13. The release handle shall be easily accessible and operable by a man inside the aeroplane, or by one in the sea, with the aeroplane in the unusual attitudes associated with ditching.

14. The position of the release handle shall be marked in accordance with the requirements of Specification No.D.T.D.1003, and easy location in darkness should be assisted by placing the handle near some easily recognisable structural feature, e.g. wireless mast.

15. The run of the cable shall be such that its functioning will not be impaired by any inrush of water during ditching.

16. Under the most adverse conditions the pull needed to operate the release shall not exceed 30 lbs.+

17. Inadvertent operation of the manual release must be guarded against and in particular the following precautions shall be taken:-

(i) The release handle shall be protected from accidental operation.

(ii) It shall be impossible for inadvertent operation of the release to be caused by movement of the equipment in the dinghy stowage due to accelerations in flight.

(iii) The possibility of release due to expansion effects in the control circuit or the equipment shall be completely guarded against.

18. External Emergency Release.- A means shall be provided to enable a member of the crew outside the aeroplane and remote from the control handle to bring about inflation and ejection of the dinghy by hand easily and without the aid of tools, after the aeroplane has been ditched.

19. Manual removal of the dinghy and inflation by the hand bellows should be possible as a last resort.

Dinghy stowage compartment

20. The compartment provided to meet the requirements of para.4 should have its width and length approximately equal and in depth should not exceed about one third of the smaller of these dimensions.

21. The total volume of the compartment shall be such that when the equipment required by para.4 is accommodated the compartment may be closed by the application of light hand pressure only. An additional allowance of 10% of the total volume is desirable to provide for subsequent changes in operational requirements.

+ A cable pull of 20 lb. is required to cut the $C.O._2$ sealing disc on the type "H" operating head.

Dinghy stowage compartment (cont'd)

22. The compartment and its cover shall be free from sharp corners or edges which might trap or damage the contents either while stowed or during inflation of the dinghy.

23. Inflation cylinder.- The inflation cylinder shall be stowed adjacent to the forward side of the compartment and shall be positioned so that the axis of the cylinder whilst nearly horizontal in level flight will slope down to the head with the aeroplane in any attitude between that of level flight and 20° nose down.

24. Positive location shall be provided for the inflation cylinder and operating head so that movement in any direction due to inertia or control loads is prevented. This shall be achieved without assistance from any of the items stowed in the compartment. The locating device shall incorporate a ready means of adjustment to compensate for irregularities in the dimensions of inflation cylinders and variation in the fabric attachments to dinghies.

25. Locating devices depending directly or indirectly on the dinghy stowage cover shall have sufficient clearances provided to ensure that preloading of the cover cannot take place.

26. Painter attachment.- An attachment point for the dinghy painter shall be provided inside the compartment. The strength of the attachment point shall be not less than 250 lb. in any direction of pull.

27. Drainage.- Drainage holes shall be provided so that the compartment will drain completely in either the level flight or standing attitudes. The holes shall be so positioned that they will not be obstructed by the dinghy envelope.

28. Electrical connection.- A plug and socket shall be fitted so that the connection to the electrical system will be severed automatically when the dinghy inflates. The plug shall be arranged so that the central electrode of the operating head can only be connected to the positive of the electrical supply.

Dinghy stowage cover

29. A cover shall be provided for the dinghy stowage and shall be adequately secured by mechanical locks to prevent its inadvertent release during any condition of flight.

30. It shall be impossible for inflation of the dinghy to commence until the locks have been completely withdrawn.+

31. It shall be possible to remove the stowage cover

+ R.A.E. Technical Note No S.M.E.145 describes an acceptable design.

C

easily for the purpose of inspection and maintenance without causing the inflation of the dinghy.

32. The stowage cover and the joint around its periphery shall be water tight and substantially air tight. The design shall also ensure that icing up of the joint between the cover and the stowage does not prevent its correct functioning.

33. A visual means of inspection shall be provided so that it is possible to ensure that the cover locks are engaged.

Sea rescue equipment

34. Standard emergency packs.- Standard emergency packs of a type or types agreed by the D.G.T.D. shall be stowed in the dinghy compartment together with the dinghy radio when required.

(Paras.35 and 36 deleted)

37. Dinghy painter.- A standard dinghy painter, Stores Ref.No.27C/2112 shall be included in the dinghy compartment.

Maintenance and inspection

38. The dinghy installation shall be readily accessible for maintenance and inspection purposes preferably without the use of wing walking mats or other ancillary equipment.

Strength

39. Stowage cover.- The stowage cover retention shall have an ultimate factor of at least 1.5 under the following combination of loading conditions,-

(i) Pre-loading+.- A pressure of 0.25 lb/sq.in. shall be used unless it is considered that the stowage will be unusually tight when the value given by the following test may be used. The preloading pressure should be measured in ten specimen packings (assembled without using great care) and the highest value obtained should be used for stressing.

+ For a full definition of this term and for information as to the method of measuring it, reference should be made to R.A.E. Technical Note No.S.M.E.192.

Strength (cont'd)

(ii) Altitude loading due to residual air in the dinghy.- A loading of L lb/sq.in. shall be used where,-

$$L = 0.5 + 1.5 \times 10^{-4} (r - 1000)$$

and r ... ft./min. ... maximum rate of climb.

This formula applies only for rate of climb of 1,000 ft/min. and over.

(iii) Inertia and external aerodynamic loading.- This shall be taken as the most adverse combination of inertia and aerodynamic loading occurring under the conditions specified by the symmetric flight envelope. Inertia loading should be assumed equal to,-

$$n \frac{W_d}{S_d} \quad \text{lb./sq.in.}$$

where ng ..... has the highest value (in the negative sense) given by either the maximum negative normal acceleration or the maximum acceleration arising from the down gust cases.
W_d ..... lb. ..... weight of stowage contents and cover.
S_d .... sq.in. ... projected cover area.

(iv) Aerodynamic pressure below cover.- In the absence of specific data this should be assumed zero; in any case the figure used should be checked by flight tests.

40. The stowage cover shall be able to withstand the same conditions as in paragraph 39 without invalidating paragraph 32., either while the loads are being applied or afterwards.

41. Stowage well.- The stowage well and its attachments shall have an ultimate factor of at least 1.5 under a combination of the loads (i) and (ii) of para.39, together with an inertia loading equal to,-

$$n_1 \frac{W_w}{S_w} \quad \text{lb/sq.in.}$$

where W_w ..... lb. ..... weight of stowage well and contents.
S_w .... sq.in. ... projected area of stowage well.

42. Accumulators.- Anchorage of accumulators shall conform to the requirements of Chapter 309 to ensure the correct functioning of the immersion switch in the event of ditching.

D

RELEVANT M.O.S. PUBLICATIONS

Specifications

No. D.T.D.1061 - Maintenance of CO_2 cylinders
No. D.T.D.1067 - Emergency pack type 4 for emergency dinghies
No. D.T.D.1068 - Emergency pack types 3, 5 and 7 for emergency dinghies

Standardisation Design Memoranda

No. 12 - Electric switches for aircraft
No. 16 - Electrical plugs and sockets

R.A.E. Reports

No. Aero 1884 - Design factors affecting the ditching behaviour of landplanes

R.A.E. Technical Notes

No. S.M.E. 145 - Positive retention of dinghy stowage covers by mechanical release mechanisms
No. S.M.E. 192 - Determination of loads arising on dinghy stowage retaining devices in flight

Scientific and Technical Memoranda

No. 8/43 - Safety of aircraft in ditching

CHAPTER 721

OXYGEN INSTALLATIONS

Amended by A.L. No.34

CHAPTER 721

OXYGEN INSTALLATIONS

General

1. The requirements of this chapter govern the design, construction, and installation of the Oxygen System.

2. The type and capacity of the Oxygen System required will be quoted in the Aeroplane Specification, and this type shall be installed in accordance with the relevant Standard Instruction Sheets.

3. A diagrammatic layout of the system shall be submitted to the D.T.D.(R.D.Q.), and if the installation is of a type for which no S.I.S. is available, the diagrammatic layout shall be submitted at an early stage in the design, and shall receive the prior concurrence of the D.T.D. before acceptance.

Charging "in situ" system

4. When three or more cylinders are specified, a charging "in situ" system shall be installed, and shall be in accordance with S.I.S.2605.

Oxygen regulators

5. Single seat.- Single-seater aeroplanes shall have an oxygen regulator Mark XIA or XIC installed.

6. Twin seats.- In 2-seater aeroplanes an oxygen regulator Mark XIB shall be installed.

7. Three or more seats.- When the crew consists of three or more, an oxygen regulator Mark XA shall be installed.

8. Installation.- Oxygen regulators shall be installed in a position as nearly vertical as possible. They shall not be more than 15° out of the vertical when the aeroplane is in the level flying attitude.

Oxygen economisers

9. Oxygen economisers Mark II or III shall be installed at each normal crew station, and shall be fitted in accordance with the requirements of S.I.S.2608.

Pipes

10. High pressure pipes.- High pressure pipes (i.e. all piping up to the regulators) shall be 3/16" o/d x 22 swg copper except for pipes connecting to valved cylinders which shall be of 3/16" o/d x 16 swg. annealed copper.

Pipes (cont'd)

11. Medium pressure pipes.- Pipes used between the oxygen regulator Mark XA and manifolds Mark IA shall be ¼" o/d x 20 swg. aluminium.

12. Low pressure pipes.- All pipes after the regulator, with the exception of those of para.11, are low pressure pipes and shall be of 5/16" o/d x 22 swg. aluminium.

13. H.P. Pipe nipples.- Nipples Marks IIIA and IVA shall be soft-soldered to high pressure pipes. Nipples Mark IIIB and IVB shall be employed when available, and these may be hard-soldered or soft-soldered as desired.

14. Marking of pipes.- In addition to the markings required by Specification No.D.T.D.1003, adhesive labels shall be used to indicate where filters and non-return valves are fitted.

Cylinders

15. Stowage.- Stowage shall be provided for the number of oxygen cylinders required by the Aeroplane Specification. The stowage shall be arranged so that the cylinders are vertical when the aeroplane is in the level flying attitude. It shall be protected by an approved wire mattress unless the mounting is capable of withstanding a load of 1,000 lb. in all directions (see also Chapter 100).

Valved cylinders

16. On naval aeroplanes valved cylinders only shall be used. On other aeroplanes, not more than two valved cylinders shall be employed.

17. Access.- Adequate access shall be provided to enable valved cylinders to be changed without removing other items of equipment.

18. Pipe connections.- Pipes connected to valved cylinders shall be arranged so as to minimise the strain on the soldered joint should the nipple not line up correctly with the valve outlet connection.

Line valve

19. The line valve in the discharge pipe between the cylinders and the regulator(s), when fitted, shall be in a position which will permit of easy operation during flight.

Protection from contamination

20. Adequate precautions shall be taken to ensure that no oil, oil vapour, hydraulic fluid, grease, etc. can reach any of the oxygen instruments or pipe joints. Guards shall be provided when necessary to meet this requirement.

B

Chapter 721
Amended by A.L.No.34

Warning indicator

21. On all R.A.F. fighter aeroplanes an approved warning indicator shall be provided and shall be such that it will warn the crew if, when at a height necessitating the use of oxygen,-

(i) the oxygen has not been turned on, and

(ii) the pressure in the system has fallen below safe limits.

An approved oxygen regulator installed so that it is readily visible to the pilot, forms an acceptable method of meeting this requirement.

CHAPTER 722

TORPEDO EQUIPMENT INSTALLATION

A

CHAPTER 722

TORPEDO EQUIPMENT INSTALLATION

General

1. The requirements of this chapter apply to all aeroplanes which are intended to be used for torpedo droppin operations and they govern the design of the installation necessary for this purpose.

2. The Contractor shall supply drawings to D.Arm.D. (Aircraft Torpedo Office) (two copies to Officer Commanding, Aircraft Torpedo Development Unit) showing the installation in complete detail, the general layout, the clearance round the torpedo and the main overall dimensions of the aeroplane The drawings shall include details of all equipment supplied by the Contractor to meet the requirements of this chapter and the position and outline of all items of equipment supplied on embodiment loan shall be indicated.

3. An approved standard 2000 lb. bomb and torpedo carrier should be used wherever the installation will accommodate it conveniently. If the torpedo carrier is not of a standard type full details shall be given, including the range of adjustment of the crutches and any other moving parts. The method of attachment of the carrier to the airframe and the winch loading arrangements (if fitted) shall be shown. All non-standard carriers shall comply with the requirements of Armament Design Memoranda No.24.

4. The Contractor shall supply curves showing the angle of the axis of the torpedo to the flight path of the aeroplane in level flight at different speeds for full operational load with,-

(i) full fuel load,
(ii) half fuel load, and
(iii) no fuel.

The angle between the axis of the torpedo and the datum line of the aeroplane shall be stated.

5. If dive brakes or flaps are fitted a second series of curves shall be supplied covering the above cases with flaps fully extended. (A convenient form for the supply of this information may be obtained on application to the Officer Commanding, Aircraft Torpedo Development Unit).

6. Any component which may be incorporated in the installation shall be of an approved type.

Materials

7. The materials of those parts where specific properties such as strength, resistance to wear, or fatigue, etc., are required, shall comply with current B.S. Specifications or with other specifications approved by the D.G.T.D. Materials shall be protected against corrosion in

accordance with Chapter 801. Parts which cannot be protected effectively shall be made of non-corrodible materials.

Dimensions of Torpedoes

8. The dimensions to be assumed shall be those shown on the relevant S.I.S. for the torpedoes specified, but the design of the installation shall be such that any mark of a particular torpedo can be used without special adaptors being necessary.

9. Account shall be taken in the initial stages of design of the equipment required for controlling the torpedo. This may include,-

(i) an air tail,
(ii) a pitch controlling mechanism in the aeroplane, and,
(iii) a gyro angling mechanism.

10. The air tail required on a particular aeroplane may be affected by the characteristics of that aeroplane and it may be found necessary to revise the installation after initial tests. D.Arm.D. should be consulted in the early design stages.

Carrier

11. The torpedo will be carried with its longitudinal axis at an angle of $2^{o} \pm \frac{1}{2}^{o}$ nose up to the line of flight of the aeroplane when flying level at a specified speed, with full operational load and half fuel load unless otherwise agreed by A.T.D.U. It may be found after trial that owing to peculiarities of the aeroplane a different angle is to be preferred and modification may be required. Hence, for the initial trials an adjustable carrier would be an advantage.

12. If the torpedo is carried in a closed bomb-cell and the angle specified in para.11 cannot be obtained, the proposed design shall be submitted to A.T.D.U. for approval before any trial installation is made.

13. The torpedo shall be carried with its longitudinal axis parallel to the plane of symmetry of the aeroplane within $\frac{1}{4}^{o}$.

14. The method of carriage shall be such that the torpedo will always take up the specified attitude at each loading within the tolerances stated above and means shall be provided for checking and re-setting the attitude at periodical airframe inspections and after any change has been made to the carrier.

Sling

15. The torpedo shall be supported by a single sling passing round it at the centre of the locating lug. One end of the sling shall be held in the standard carrier strainer and the other by the release slip. Appropriate means shall be

AP 970 Design Requirements for Aeroplanes AL25-37-19460801 OCR.pdf

provided for taking the fore and aft loads of the torpedo specified but when a lug is provided on the top centre line near the centre of gravity of the torpedo (as shown on the Torpedo S.I.S), the fore and aft loads shall be taken by a locating plate fitting over the lug.

16. If the carrier is not lowered by a winch for loading, the plate shall be free to move up and down through a range of about ½" and shall be held down by springs to facilitate the entry of the lug during loading.

Crutch pads

17. The crutch pads shall consist of padded curved plates at least 1½" wide in the fore and aft direction and 3" circumferentially. They shall be located at the same distance fore and aft of the locating lug as those on the standard 2000 lb. bomb and torpedo carrier.

Strop

18. Some device shall be fitted to retract the free end of the strop after the torpedo is released so that the strop will not foul the bomb-doors, damage the airframe, or strike the ground on landing. It shall be arranged so as not to impede the process of loading and so that it can be fitted after loading if it fouls the torpedo trolley. If the standard 2000 lb. bomb and torpedo carrier is used the strop retractor approved for use with it shall be fitted.

Jettisoning

19. The position of the carrier shall be such that when the torpedo is jettisoned it will fall clear of the aeroplane and adjacent equipment. This requirement shall be met with the aeroplane in any attitude possible from any combination of pitch and roll within the following ranges,-

(i) Pitch:- from 15° upwards (to the line of horizontal flight) to the diving angle laid down in Appendix "B" to the Aeroplane Specification.

(ii) Roll:- from 10° port to 10° starboard.

Loading

20. Winch loading of the torpedo should be provided and should be arranged so that the torpedo can be raised from the ground. Space shall be available for the torpedo fitted with air tail to be brought into position under the aeroplane on the standard torpedo trolley when the bomb-doors are open. There shall be a minimum clearance of 3" both vertically and horizontally to allow for rough ground and to avoid the necessity for accurate manoeuvring. (See also para.34).

21. If a detachable carrier is used, it is preferable that it should be lowered by the winch for attachment to the

torpedo before loading provided that the method of attaching the carrier to the airframe is such that it will take up its correct position without special adjustment.

Loading lights

22. If the torpedo is carried in a bomb cell a loading light or lights with switches accessible from the ground shall be provided to give general illumination round the torpedo for loading at night, and, in particular, to illuminate the depth index and other control points and attachments. The switch or switches shall be so connected to the bomb-doors that they extinguish the lights when the bomb-doors are closed but do not switch on again until operated by hand.

The gyro-angling unit.

23. A specified gyro angling unit shall be mounted so as to engage in the gyro angling spindle of the torpedo. The unit shall be located so that it will engage satisfactorily with the torpedo when this is in its specified position or within the specified tolerance as quoted on S.I.S.No.2835. If the gyro angling unit fouls specified alternative stores it should be arranged so that it can be moved easily without the necessity for unwiring.

Depth setting

24. Means shall be provided to enable a member of the crew to set the depth index of the torpedo during flight and also for indicating the depth setting on a dial visible to the operator. The equipment shall be designed so that the depth setting can be changed easily and rapidly and the maximum time taken to change the depth setting throughout the complete range in either direction shall be not more than 90 seconds. The depth index on the torpedo shall be visible after loading.

Pitch control mechanism

25. Equipment for controlling the pitch of the torpedo on release shall be fitted when specified.

Accessibility of controls

26. Access to a loaded torpedo from the ground shall be provided to enable the following operations to be carried out easily:-

(i) removing the charging valve,
(ii) opening the stop valve,
(iii) fitting the charging nozzle (or an adaptor) to the charging valve, and
(iv) fitting a pressure gauge to the charging valve.

Details of the special tools and equipment employed in these operations are given in the torpedo S.I.S.

FS/60

Other attachments

27. Any other attachments specified for the particular torpedo or for the air tail shall be provided. Where lanyards are provided as airframe parts they shall be arranged so that they can be attached quickly to the appropriate part of the torpedo after loading and so that then there is no possibility of them becoming detached by vibration. Loose parts should be avoided. Anchorage on the airframe shall be provided for the static cord of the depth and roll recorder used in training.

Control wiring

28. The design and installation of the control wiring shall comply with the requirements of Chapter 709.

Controls

29. The release of the torpedo shall be under the control of the pilot and the selector switches and release controls at the pilot's station shall be fitted in a position convenient for operation by the pilot.

30. When depth-setting is governed by mechanical means this shall be under the control of the observer who shall be in direct communication with the pilot. An inter-communication pick-up point shall be placed near the depth setting gear for this purpose.

31. When electrical depth setting is specified the installation shall comply with the relevant S.I. Sheets or, if these are not available, with installation drawings which will be supplied to the contractor by D.Arm.D. on request. The electrical control unit shall be situated in the cockpit for convenient operation by the pilot.

Sights

32. The torpedo-sight mounting shall be rigidly connected to the aeroplane structure in a well-lighted position and sources of magnetic disturbance shall be as remote as possible. The distances which separate these sources from the centre of the compass shall comply with the requirements of Chapter 717.

33. The torpedo-sight shall be installed so as to conform to the requirements laid down in the relevant S.I.S. The sight opening shall be properly screened to ensure the exclusion of draughts from the fuselage. In the case of F.A.A. aeroplanes it shall also be water-tight.

Ground or water clearance

34. In the case of a landplane or ship-plane, the ground clearance of the torpedo and air tail shall be not less than 6" in each of the following cases,-

(i) when at rest with the thrust line horizontal, the tyres inflated to normal pressure and the undercarriage and tyres compressed to an extent corresponding to 3g, and

(ii) when at rest with nose or tail wheel on the ground, one main undercarriage tyre deflated and the other inflated to the maximum permissible pressure.

35. In the case of a seaplane, there shall be at least 27 inches between the water level and the lowest point of the torpedo and air tail when the seaplane is at rest in the fully loaded condition. In addition the torpedo and air tail shall be safe from damage by waves during taxying and take-off.

Marking of parts

36. The marking of cables shall be in accordance with the requirements of Chapter 709 and the identification marking of other parts in accordance with specification No.D.T.D.1003.

Tests

37. In the case of an experimental aeroplane (and in other cases if so required) the contractor, on completion of the installation, shall subject it to such tests as D.T.D. or D.Arm.D. considers necessary.

AP 970 Design Requirements for Aeroplanes AL25-37 19460801 OCR.pdf

RELEVANT M.O.S. PUBLICATIONS

Standardisation Design Memoranda

No. 12 - Electric switches for aircraft
No. 38 - Filament lamps

R.A.E. Technical Notes

No. Aero 1715 - The estimation of the aerodynamic loads on external stores

Armament Design Memoranda

No. 24 - Strength requirements for bombs and carriers and functioning tests for release mechanisms for use in aircraft

CHAPTER 723

GLIDER TOWING INSTALLATION

FS/62

CHAPTER 723

GLIDER TOWING INSTALLATION

Introduction

1. The requirements of this Chapter are applicable to all aeroplanes intended for use as glider tugs. The strength clauses for the towing hook, its attachments, and the aeroplane structure are based on the same general assumptions as are made for corresponding cases on the gliders themselves.

Towing attachment

2. Towing hook.- The type of attachment considered is that of an approved hook at or near the rear end of the fuselage, and intended for use with a single towrope. Different cases will probably have to be considered if other types of attachment (e.g. wing hooks) are specified.

3. Strength.- The ultimate factor throughout the hook, its attachments and the aeroplane structure shall not be less than $1\frac{1}{3}$ when the towrope load reaches a value S - the specified breaking strength of the towrope. The load S may be reached by a snatch load being superimposed on the loads for steady towing flight at maximum towing speed.

4. The required factor shall be obtained when the load S is considered as being applied by the towrope in each of the following backward directions,-

(i) horizontally and in the plane of symmetry,
(ii) 30° downwards and in the plane of symmetry,
(iii) 30° upwards and in the plane of symmetry, and
(iv) horizontally and 15° sideways for single tug towing, or horizontally and 20° sideways for twin tug towing.

5. Stressing assumptions.- The unfactored loads should be assumed to consist of two superimposed load systems. The loads due to steady towing flight at maximum towing speed with a towrope pull equal to the drag D of the glider, form the first system. The second system comprises the loads resulting from a towrope snatch load of S-D which should be assumed to be balanced entirely by linear and rotational inertia of the aeroplane.

Release control and circuit

6. Form.- The pilot's control for releasing the towing cable shall be of simple "pull" type and shall have a knob of standardised design in accordance with requirements of Chapter 103.

7. Position.- The release control shall be positioned so that it can be comfortably reached and operated by the pilot's throttle hand. The distance between the release control and the throttle control should be small whilst

Release control and circuit (cont'd)

allowing ample clearance for the operation of one control by a gloved hand without fouling the other.

8. Operating direction and force.- The direction of pull necessary to release the towrope shall be towards the pilot, and the travel of the control shall be between 4 and 6 inches. The operating force required to release the towrope shall not exceed 30 lb. nor be less than 10 lb. whatever the load in the towrope.

9. Unintentional release.- The control circuit shall be so arranged that release of the towrope, other than by intentional release at the proper control, is impossible. Adequate precautions shall be taken to prevent fouling of the control circuit by members of the crew.

10. Circuit strength and stiffness.- The entire control circuit shall have a factor of safety of not less than $1\frac{1}{3}$ under a pull of 75 lb. applied at the release control at any angle up to 30° from the normal direction of pull. This force shall be assumed to be reacted at the hook mechanism. The control circuit shall be of robust design and be sufficiently stiff to eliminate excessive stretch and the need for frequent adjustment. 10 cwt. steel cable is the minimum acceptable size if cable or wire control is used.

11. Ground release.- It shall be possible to operate the release slip by hand from the ground in such a manner that a single operator without moving his position can check that the release is in the fully locked position, both when the tow plug is in the slip and otherwise.

Tests

12. Installational.- Tests shall be made on each complete installation to check the satisfactory functioning of the installation as a whole before flight towing tests are commenced.

13. A load of $\frac{1}{6}$ S or 1.5D, whichever is the greater+, shall be applied to the towing hook by means of a tow rope system, the layout and end fittings of which properly represent the scheme which will be used in flight, in such a manner that the tow rope, when taut, is approximately parallel to the aeroplane centre line.

14. The pilot's release control shall then be operated manually from the cockpit a sufficient number of times to confirm, to the satisfaction of the DGAI that,-

(i) the tow rope releases promptly every time,

(ii) the tow rope end is not likely to cause damage to or become entangled in any part of the aeroplane,

+ Where D is not known a load of $\frac{1}{4}$S shall be applied.

B.

Tests (cont'd)

(iii) the tow rope end fitting cannot appear to be replaced on the hook correctly yet fail to remain in place when the load is applied, and

(iv) the effort required to cause release can be applied comfortably by the pilot and does not exceed 50 lb.

15. Light load release.- A test shall be made to determine if the towrope will release when it trails with only its own weight and drag acting. A force of 20 to 50 lb. shall be applied to the towrope by pulling backwards and downwards from the hook at an angle of approximately 10° to the aeroplane centre line. It shall be demonstrated that the towrope will release with certainty under these conditions.

RELEVANT M.A.P. PUBLICATIONS

Airworthiness Technical Notes

No. 127 - Towed gliders (secret)

F.S.33.

CHAPTER 724

INSTALLATIONS FOR THE CARRIAGE OF FREIGHT

Note.- The subject matter of this Chapter is from J.A.C.Paper No.216.

CHAPTER 724

INSTALLATIONS FOR THE CARRIAGE OF FREIGHT

Introduction

1. The requirements of this chapter cover the loads arising from the carriage of freight (including wheeled vehicles) in military transport aeroplanes.

Strength

2. Loading and unloading.- The floor of the freight compartment, the aeroplane structure as a whole, and any ramp or staging which forms part of the aeroplane equipment - as opposed to ground equipment - shall have an ultimate factor of not less than 3.0 under the combined loads arising from any unit of freight in any possible position during loading and unloading, together with the loads due to the aeroplane standing on the ground.

3. Flight, take-off and landing.- The floor, the adjacent structure and the means of securing the freight shall, under any condition of flight, take-off, or landing, have ultimate factors not less than those specified for the aeroplane as a whole. This requirement shall be met under each of the following loading conditions taken separately and independently,-

(i) a uniform loading of 75 lb/sq.ft. over the whole of the floor area of the freight compartment,

(ii) a uniform load of 150 lb/sq.ft. over two defined strips, one down each side of the compartment (the width of each strip should be about one third of the width of the freight compartment, and in any case not less than 2 ft.),

(iii) a local load of 300 lb/sq.ft. uniformly spread over any one square foot of the floor, the remainder of the floor being assumed unloaded (as a criterion for the floor covering only), and

(iv) loads due to all combinations of freight items specified for the particular aeroplane type within such limitations of positioning as are agreed by D.G.T.D.

4. Resistance to indentation.- The floor shall be designed to distribute concentrated local loads (e.g. those arising from the steel shod boots of troops or loading crews) so that local failures will not occur.

5. Crash landing.- To reduce risk of injury to the crew during crash landing or ditching, the freight lashings and their attachment points shall have an ultimate factor of 1 under the forward and lateral inertia loads corresponding to a combination of 4g backwards with any sideways acceleration between 0 and 1.5g.

CHAPTER 725

TRANSPARENT PANELS

Issued on 1st Jan.1945
(Re-issued on 1st May 1946)

CHAPTER 725

TRANSPARENT PANELS

1. General requirements

1.1 Material

1.1.1 Except where otherwise specified, one of the following approved materials shall be used for transparent panelling on the exposed surfaces of aeroplanes,-

(i) Laminated glass: to Specification No.D.T.D. 218 or D.T.D.402.

(ii) Acrylic resin: to Specification No.D.T.D.339.

1.1.2 Where there is a free choice between laminated glass and acrylic resin consideration should be given to the recommendations of A.D.M.579.

1.2 Design

1.2.1 The formation of lenses or prisms shall be avoided in the design of panels. The best optical properties are obtained with relatively simple shapes and some compromise may be necessary between these and ideal aerodynamic shapes.

1.2.2 Drawings shall call for sharp corners or edges, resulting from cutting or drilling, to be removed. Bevels should not be sharper than 45° and bevelling of curved edges avoided. Notches, indentations, and holes in the panels should also be avoided.

1.3 Processing of materials

1.3.1 To give the best optical properties, curved panels of material to Specification No.D.T.D.339 should be produced by a blowing process rather than a moulding process.

1.4 Mounting

1.4.1 Wherever practicable, fixed transparent panels shall be fitted in friction mountings in order to obviate the use of rivets, bolts, or screws through the material and to enable dimensional changes of the panels to be accommodated more readily.

1.4.2 Care shall be taken to ensure that the friction grip, while efficiently securing the panel, is not so tight as to prohibit re-expansion into the mounting following contraction, since the panel will bulge and will then tend to be sucked out in flight more easily.

1.4.3 On high speed aeroplanes the friction grip method shall not be used to fix panels of material to Specification No.D.T.D.339 owing to the danger of the panels being sucked out in flight. A positive fixing method should be used.

1.4.4 Transparent panels may be mounted in channel section framing using an approved cement which while holding the sheet firmly after setting will be sufficiently elastic to permit the movement required.

1.4.5 Where it is essential to fix panels of material to Specification No.D.T.D.339 by means of rivets, bolts or screws passing through the panel, the following formula shall be used for determining the diameter of the holes in the material,-

$$D = R + \frac{7L}{1000}$$

where D = diameter of hole.
R = diameter of rivet, bolt or screw.
L = greatest distance between any two rivets (e.g. for rectangular panels L will be the distance between diagonally opposite rivets).

The rivets shall be central in the hole at normal temperature.

1.5 Fabric attachment

1.5.1 The attachment of fabric to transparent panels shall be effected by the use of Perspex Cement No.6.

2. Detail requirements

2.1 Reflector windscreens

2.1.1 Where bullet-proof reflector windscreens are specified, they shall satisfy the requirements of Specification No.D.T.D/R.D.M.12.

2.2 Dry air sandwich windscreens

2.2.1 Where dry air sandwich windscreens are specified they shall be in accordance with the requirements of Specification No.D.T.D.1082.

2.3 Sealed dry air sandwich windows

2.3.1 Where sealed dry air sandwich windows are specified they shall be in accordance with the requirements of Specification No.D.T.D.1088.

2.4 Sliding panels

2.4.1 The guides for sliding panels shall be made of metal except in cupolas and gun turrets where transparent guides may be used at the discretion of D.Arm.D.

2.5 Observation stations

2.5.1 Grade A of material to Specification No.D.T.D.339, or laminated glass shall be used at observation stations.

2.6 Cabin lighting

2.6.1 Grade B of material to Specification No.D.T.D.339 may be used for panels installed primarily for the provision of interior illumination.

3. Strength

3.1 Air loads

3.1.1 To cater for air loads all panels shall have an ultimate factor of at least 1.5 under a uniformly distributed loading of,-

$$1.0 \times \tfrac{1}{2}\rho_o V_D^2 \qquad \text{lb/sq.ft.}$$

where ρ_o ... slugs/ft^3 ... air density at sea level.

If satisfactory measurements are available showing that the maximum normal force coefficient on the windscreen or window in position on the aeroplane is less than 1.0, then this lower normal force coefficient may be taken instead of 1.0.

3.2 Ditching loads

3.2.1 To cater for ditching, the bomb-aimers' panels and local supporting structure shall be capable of withstanding an ultimate pressure of 12 lb/sq.in. The pressure shall be assumed uniformly distributed and acting inwards normal to the panel.

3.3 Strength determination

3.3.1 The strength of glass panels shall be determined either by calculation or by test, as follows,-

(i) By calculation: The maximum stress, corresponding to the factored load, shall not exceed 5 tons/sq.in. when calculated on the assumption that,-

(a) the panel is a simply supported homogeneous beam of span equal to the shorter mean distance between the supported edges, and

(b) no support is provided along the edges parallel to the span of such a beam.

(ii) By test: Two specimens of the largest section of the panel shall be tested to the factored load (without 20 per cent addition) specified in para. ~~2.6~~ 3.1., and if they carry this load successfully the panel is acceptable. The edge supports of the test specimens shall be fully representative and the load uniformly distributed (loading with shot is liable to be inaccurate because of arching effects). The lower failing load of the two test specimens shall be taken. If the lower failing load is less than 80 per cent of the higher failing load this fact should be reported to the Director R.A.E.

+ 3.3.2 The housings of panels intended for the protection of externally visible lamps shall be capable of withstanding immersion in water of $1\frac{1}{2}$ lb/sq.in. pressure without leakage.

+ From Chapter 709.

C

RELEVANT M.O.S. PUBLICATIONS

Specifications

No. D.T.D. 1082 - Dry air sandwich windscreens

Aircraft Design Memoranda

No. 579 - Materials for transparent panels

Scientific and Technical Memoranda

No. C3/43 - Damage to aircraft windscreens by impact with birds
No. C2/44 - American methods of safety glass manufacture

CHAPTER 726

INSTALLATION OF ROCKET ASSISTED TAKE-OFF GEAR

CHAPTER 726

INSTALLATION OF ROCKET ASSISTED TAKE-OFF GEAR

General

1. The requirements of this chapter are applicable in full only when the use of rocket assisted take-off gear is called for on a particular aeroplane type.

2. All Naval aeroplanes, however, are required by Chapter 102 to be suitable for accelerating by the rocket assisted method and the designer of such aeroplanes should in every case consider the requirements of this chapter in relation to the general operational requirement.

Number

3. The number of rockets to be employed will be dependent upon the individual aeroplane type and shall be decided by the designer in consultation with the Director, R.A.E. (S.M.E. Dept).

Attachment

4. The method of attachment of the rockets shall be in accordance with Aero Department drawings number 997 and 998. These drawings, which are secret, may be obtained by application in writing to the Director, R.A.E. (Aero Dept).

Location

5. The rockets shall be symmetrically disposed about the plane of symmetry of the aeroplane (normally in two groups one on each side of the aeroplane) and shall be so arranged that they do not impede the entry or exit of the crew.

6. Consideration shall be given to the effect of blast pressure from the rocket jet on the adjacent parts of the aeroplane and these should lie at least 1 ft. outside the boundary of a jet cone having a semi-angle of 13°.

Loading

7. The installation shall be such that the rockets can be placed in position on the aeroplane quickly from ground level with wings both folded and spread, without the use of special equipment being necessary.

8. Folding and spreading of the wings shall be possible with the rockets in position on the aeroplane.

Jettisoning

9. Jettison arrangements shall be provided and shall be such that after operation of the appropriate cockpit control the rockets and their attaching gear fall clear of the aeroplane and of any gear which may be carried externally.

10. The rocket pullaway plugs on the aeroplane shall be located in dished holes in a manner which will give a direct in line pull when jettisoned and they shall be covered in a manner which will ensure good weatherproof protection and clean aerodynamic lines.

Controls

11. Rocket firing and jettison controls shall be provided in the cockpit in a position convenient for the use of the pilot. They shall consist of,-

(i) a firing button located on the throttle and shrouded,
(ii) a pilot's master switch (see S.I.S.3654), and
(iii) a jettison lever.

Electrical installation

12. The wiring and electrical installation shall be in accordance with the requirements of S.I.S.Nos.3019, 3646, 3654, 3675, 3686 and 3833. When the requirements of these S.I.S. need amplification reference should be made to the Director, R.A.E. (Elect. Dept).

13. A test and distribution box is required by the S.I.S. and this shall be positioned so that it is readily accessible for testing purposes, preferably without entering the aeroplane.

14. The main fuse for the rocket firing circuits is frequently in need of replacement and shall therefore be readily accessible. A location adjacent to the test and distribution box is desirable.

Strength

15. The strength requirements for the installation are given in Chapter 307.

RELEVANT M.O.S. PUBLICATIONS

Standardisation Design Memoranda

No.12 - Electric switches for aircraft

R.A.E. Technical Notes

No. Aero 1360 - Application of rockets for take-off assistance of Fleet Air Arm aircraft (secret)

No. Aero 1715 - The estimation of the aerodynamic loads on external stores

CHAPTER 727

INSTALLATION OF ARRESTER GEAR

Note.- This Chapter was prepared to incorporate the recommendations of R.A.E. Catapult Section Note No.60.

A

Issued on 1st Aug.1945
(Re-issued on 1st May 1946)

CHAPTER 727

INSTALLATION OF ARRESTER GEAR

Introduction

1. The requirements of this chapter govern the installation of arrester gear in aeroplanes intended for deck landing operations. Strength requirements are given in Chapter 308.

Standard parts

2. The Director, RAE. (Naval Aircraft Dept.) should be consulted to ascertain which of the available standard parts (hook etc.) are appropriate to the aeroplane type and weight.

Engagement of wire

3. The design of the gear and its installation shall be such that the hook will engage an arrester wire when the aeroplane is landing in any attitude which may occur in the course of normal carrier operations (allowance being made for pitching and rolling of the carrier). This requirement shall also be met when the wire has been depressed by the passing of the wheels.

4. A device shall be provided whereby the hook returns rapidly to the arrester position, should the hook bounce after contact with the deck.

Pitching

5. The installation shall be such that pitching tendencies resulting from the application of the retarding force are reduced to a minimum.

Range of movement

6. The free lateral movement of the arrester hook shall be not less than 15° each side of the central position. This requirement need not be met if the assembly is designed as a laterally rigid structure to sustain the specified side load.

7. If the hook is free laterally and if it must be centralised before housing or retraction, then an automatic centralising device shall be provided.

Avoidance of damage.

8. Means shall be provided to prevent the arrester wire engaging or damaging parts of the aeroplane during an arrested landing, and also when releasing the wire from the hook at the end of the arresting run.

9. Provision shall be made to prevent damage to the aeroplane structure by the hook when swinging in any direction.

10. The design of the gear shall be such that in any landing attitude, contact with the deck will not damage the hook assembly or local aeroplane structure.

Maintenance

11. The arrester hook shall be designed for use with an arrester wire of $1\frac{1}{8}$" diameter and the design shall avoid appreciable wear of the arrester hook and wires.

12. It shall be possible after an arrested landing for one man to stow and secure the arrester hook in the retracted position in not more than 3 seconds.

CHAPTER 728

STATIC AND PITOT PRESSURE SOURCES

Note.- The subject matter of this Chapter was previously contained in Chapter 719, paras.15 to 21 inclusive. New requirements have been added.

A

CONTENTS

	Para.
Introduction	1
Errors in pressure registration	2
Static pressure to altimeter	2.5
Static pressure to airspeed system	2.6
Installation of static vents	3
Tests	4
Pitot and static piping	5

CHAPTER 728

STATIC AND PITOT PRESSURE SOURCES

1. Introduction

1.1 The requirements of this Chapter govern the installation of static and pitot pressure sources.

2. Errors in pressure registration

2.1 Every attempt shall be made to reduce to a minimum the errors in static and pitot pressure registration which may arise owing to the installation of the pressure sources. Under sea level conditions the pressure sources may not register the free stream pressures correctly thereby introducing an error which is defined as the position error. In addition the pressure field, both of the aeroplane and of any strut supporting a pressure, source may change with Mach number thereby introducing changes of error with altitude, the changes from sea level conditions being defined as the compressibility and the strut error respectively. Position error, compressibility error and strut error have each two components, consisting of the errors in static pressure registration and pitot pressure registration, and each component is distinguished by the word "static" or "pitot", e.g. static position error and pitot position error.

2.2 The static position error causes both the airspeed indicator and the altimeter to read incorrectly. The effect of this on the airspeed system is normally expressed in terms of knots and at a particular speed is independent of altitude. For the altimeter, however, the effect is expressed in terms of feet and at a particular speed will therefore vary with altitude.

2.3 Experience is continually being gained on methods of countering these errors and the Contractor should therefore consult the D.G.T.D. at an early stage of the design in order to gain the benefit of the latest information available.

2.4 These errors in pressure registration affect the airspeed indicator and altimeter systems and those instruments whose functions involve an appreciation of airspeed and altitude. In order that such instruments may effectively serve their purpose the requirements of paras.2.5 to 2.6 inclusive shall be considered.

2.5 Static pressure to altimeter

2.5.1 The error in the altimeter system due to the static position error should be less than 150 ft. at

B

Errors in pressure registration (cont'd)

sea level over the speed range in level and diving flight. Where there is a choice between two sources, each satisfying this requirement, preference shall be given to that source which causes the altimeter to indicate a height lower than the true height.

2.6 Static pressure to airspeed system

2.6.1 On all aeroplanes which are expected to achieve a Mach number of 0.8 or above, a leading edge mounted pitot static head shall provide the static pressure to the airspeed system. This head shall be mounted so that its nose is at least 0.6 of the semi-span from the centre line of the aeroplane and at least 0.4 of the local wing chord in front of the leading edge.

2.6.2 On all other aeroplanes the static pressure shall be derived from a suitably placed vent (or vents) and the standard fittings available shall be used.+

2.6.3 The static vent(s) should be so located that, over the speed range in level and diving flight, the position error,-

(i) is within ± 2.5 knots, and

(ii) changes by less than 2.5 knots within that band.

2.6.4 When the air position indicator is a requirement, the position error (combined pitot and static) when bomb doors are closed, should lie within the limits of para. 2.6.3 and, further at the cruising speed with full load, the error should be within ± 1 knot.

2.6.5 When the Mk.XIV bombsight is a requirement, both the position error (combined pitot and static) and the static position error should lie within the limits of para. 2.6.3 when bomb doors are open.

3. Installation of static vents

3.1 A vent shall be fitted on each side of the fuselage when the static pressure is derived from the nose of the fuselage. These vents shall be interconnected and the connection to the instruments shall be taken from the mid-point of this interconnection.

+ The dynamic pressure source shall be a suitably mounted pitot pressure head.

3.2 When the static pressure is derived from the rear of the fuselage a vent shall be fitted on each side when either,-

(i) the Mk.XIV bombsight is a requirement, or

(ii) the number of instruments with static pressure connections, in addition to these on the instrument flying panel, exceeds two.

3.3 When the two static vents are fitted in the rear position the connection of the instruments to the respective static vents shall be as follows,-

PORT STATIC VENT
- Instrument flying panel.
  - Air speed indicator
  - Altimeter
  - Rate of climb indicator.
- Air position indicator
- Any other instruments on port side.

STARBOARD STATIC VENT
- Navigator's instrument panel.
  - Air speed indicator
  - Altimeter
- 2nd Pilot's airspeed indicator.
- Bomb sight Mk.XIV
- Any other instruments on starboard side.

4. Tests

4.1 For the preliminary trials on prototype aeroplanes a pitot static head shall be fitted. When all modifications likely to affect the choice of static vent position have been made, flight tests shall be made to determine the positions of the static vents.

5. Pitot and static piping

5.1 The installation of the pipe lines for the pitot and static systems shall be such as to prevent the ingress and accumulation of water.

c

5.2 To reduce vulnerability, in cases where two static vents and/or two pressure heads are fitted the run of the pipe lines shall be as far apart as possible, preferably on opposite sides of the fuselage.

RELEVANT M.O.S. PUBLICATIONS

R.A.E. Technical Notes

No.Inst.799 - Choice of static vent position

PART 8
MAINTENANCE

(8123) T14097/2692 500 1/44 M46506 C & P 752

PART 8

Maintenance

CONTENTS

Chapter 800	General maintenance requirements
Chapter 801	Precautions against corrosion and deterioration
Chapter 802	Transport, handling and storage
Chapter 803	Routine maintenance
Chapter 804	Repairs
Chapter 805	Replacement of components
Chapter 806	Interchangeability

AP 970 Design Requirements for Aeroplanes AL25-37 19460801 OCR.pdf Page 6 of

CHAPTER 800

GENERAL MAINTENANCE REQUIREMENTS

Note.- The subject matter in this Chapter was previously contained in D.T.D. Specification 1028 and Chapter 4, with the exception of para.6 which is a new requirement (Res/Pub/388).

FS/68

6. Where fitted bolts are employed which cannot be bushed the design should be such that oversize fitted bolts may be employed subsequently.

+ Rigging and C.G. datum marks

7. All aeroplanes shall be provided with means of indicating the longitudinal and lateral rigging positions, and for specifying the position of the centre of gravity.

8. Datum points.- A "Datum point" for use as a point of origin for specifying the position of the centre of gravity shall be chosen conveniently near the C.G. position, but in any case shall be so positioned that a plumb bob may be dropped from it to the ground without fouling any part of the aeroplane.

9. The datum point shall be marked on a metal plate fastened to the primary structure of the aeroplane or by other suitable means, and the words "Datum point" permanently marked adjacent to the datum. Preferably the datum point should be positioned on the side of the fuselage or hull.

10. Longitudinal and lateral rigging positions.- The longitudinal and lateral rigging positions shall be specified either in relation to datum points or to suitable members of the aeroplane's primary structure. The datum or line joining the datum points should be horizontal when the aeroplane is in the correct rigging position.

11. C.G. position.- The axes of reference for the C.G. position from the point of origin shall be.-

(a) A horizontal fore and aft line through the datum point, when the aeroplane is in the rigging position. (The datum line)

(b) A vertical line through the datum point and normal to the datum line.

12. The co-ordinates of the centre of gravity shall be quoted (in inches) as positive, when above the horizontal axis, and when aft of the vertical axis.

13. Drawings.- The position of the datum point and the location of the surfaces or points for obtaining the longitudinal and lateral rigging positions shall be indicated on the drawings supplied as part of the "Descriptive Notes and Rigging Instructions" for experimental prototype aeroplanes and in the Volume I for production aeroplanes.

Handling

14. Detail requirements are given in Chapter 802, and the design of the aeroplane must enable the use of standard equipment wherever possible. Where standard equipment or tools cannot be employed the special items must be included with the design of the aeroplane, but the introduction of non-standard items shall be avoided where possible.

+ Previously S.I.S.36 and D.T.D.1028.

AP 970 Design Requirements for Aeroplanes AL25-37 19460801 OCR.pdf

Chapter 800
Amended by A.L.No.26

Routine maintenance and repair

15. Detail requirements for routine maintenance are given in Chapter 803 but in the general layout of the design, attention should be given to the possibility of reducing repair work, particularly that resulting from a landing with the undercarriage or tail wheel retracted, or in the event of a tail wheel failure. If the design permits, an arrangement should be effected which allows part of the weight of the aeroplane to be taken on the retracted wheels. Alternatively longitudinal members adequately supported should be incorporated in the fuselage and any other portions of the structure which would be in contact with the ground.

16. To retain the serviceability of the aeroplane as far as possible it should be easy to remove any non-essential but easily damaged parts without interfering with the serviceability of the aeroplane. The wheel fairings of a fixed undercarriage are a typical example.

17. Naval aeroplanes.- A means by which the truth of the fuselage can be checked during and after repair on board ship shall be provided on all Naval aeroplanes. Any fittings necessary for this purpose may be removable.

Replacements and interchangeability

18. The basic requirements for ease of replacements are:-

(i) Accessibility of joints
(ii) Interchangeability of components.

Detail requirements on replacements are given in Chapter 805, and on interchangeability in Chapter 806.

Documents

19. For requirements on the preparation of documents required in relation to the repair and maintenance of aeroplanes reference should be made to Aircraft Design Memoranda Nos.251, 257, 353, 358, and 483.

RELEVANT M.O.S. PUBLICATIONS

Specifications

No. D.T.D. 1003 - Identification marks on aircraft and aircraft parts

Aircraft Design Memoranda

No. 251 - Repair notes for experimental aircraft
No. 257 - Repair scheme for aeroplanes
No. 275 - Approval procedure for simple parts and accessories
No. 353 - Preparation of Vols.I of Air Publications for aeroplanes
No. 356 - Lubricants for aeroplane parts
No. 358 - Procedure for the introduction and change of the design of airframes, propellers (fixed pitch) and miscellaneous airframe components
No. 483 - Information required for maintenance, stowage, and transport of Naval aircraft components

Airworthiness Technical Notes

No. 134 - Maintenance of landing gear

CHAPTER 801

PRECAUTIONS AGAINST CORROSION AND DETERIORATION

Note.- The subject matter contained in this Chapter was previously embodied in Chapter 15.

F.S./23

CONTENTS

	Para.
General -	
Introduction	1
Classes of protective treatments	2
Identification of protective treatments on drawings	9
Application of protective treatments	14
Protection of ferrous components -	
Introduction	15
Class 1 protective treatment	16
Exceptions to Class 1 protective treatments	17
Class 1A and 2 protective treatments	18
Application of protective treatments	19
Protection of components made from aluminium and from alloys with a high aluminium content -	
Introduction	20
Class 1 protective treatment	21
Exceptions to Class 1 protective treatment	22
Class 1A and 2 protective treatments	23
Application of protective treatments	24
Protection of components made from alloys with a high magnesium content -	
Introduction	25
Class 1, 1A and 2 protective treatments - Standard treatment	26
Exceptions to the standard treatment	27
Protective cartridges for fuel tanks	28
Protection of wooden components -	
Introduction	29
External plywood surfaces	30
Internal surfaces	31
Fabric covered components	32
Accumulator stowages	34
Application of protective treatments	38
Protection of copper, brass and bronze parts -	
Class 1 protective treatment	41
Class 1A and 2 protective treatments	42
Interchangeability	43
Corrosion of bolts to B.S. Specifications S.61 and S.62 in wooden members subject to wetting in service	44
Prevention of corrosion due to electrolytic action between dissimilar metals	47
Miscellaneous items -	
Use of leather	52

AP 970 Design Requirements for Aeroplanes AL25-37 19460801 OCR.pdf Page 617

CONTENTS (cont'd)

	Para.
Use of rubber	53
Sound proofing materials	54
Hydraulic mechanisms	55
Cables	56
Design precautions -	
General	57
Exclusion of water	58
Drainage	61
Inspection holes	67
Ventilation	68
Tanks	69
Plating of assembled components	72
Construction of cowling	73
Packings between light-alloy piping and clips	76
Precautions and treatments during assembling -	
Contacts between dissimilar materials	78
Contacts between similar metals	79
Internal surfaces of dissimilar materials	80
Bolt holes in wooden members	81
Tank jointing materials	82
Tank strap packings	85
Flexible end connections on pipes	86
Pipe clips and packing material	87
Bonding of pipes	88
Spot-welded joints and non-structural components	89
Surfaces liable to touch fabric during doping operations	90
Precautions and treatments after assembling	91
Tests	
Drainage of wooden components	95

Added by A.L.No.6

CHAPTER 801

Precautions against corrosion and deterioration

General

1. Introduction.- All parts of airframes are to be protected against corrosion and deterioration in accordance with the requirements of this Chapter. These requirements are also applicable to parts and/or components designed and manufactured by sub-contracting firms. Parent firms are to ensure that sub-contractors are familiar with, and work to, these requirements.

2. Classes of protective treatments.- Reference is to be made to the aeroplane specification or contract for instructions as to the class of the treatment, namely Class 1, 1A or 2, required for the particular aeroplane, and for instructions regarding the colour of the finishing coat or exposed surfaces.

3. Class 1 treatment will be required on components of seagoing aeroplanes.

4. Class 1A treatment will be required on components of aeroplanes, other than seagoing aeroplanes, which are liable to be stationed abroad, or which are intended to operate from coastal aerodromes in the United Kingdom.

5. Class 2 treatment will be required for components of aeroplanes not defined above.

6. When the protective treatment for a material is not divided into classes, then parts made from that material are to receive the specified treatment in all cases.

7. When the aeroplane specification or contract calls for camouflage, reference is to be made to ~~A.P.M. 332~~ D.T.D. Technical Circular 360. for particulars of this treatment.

8. Parts which are interchangeable between aeroplanes requiring Class 1 treatment and those requiring Class 1A or 2 treatment, are to receive Class 1 treatment.

F.S./29

Chapter 801, Paras.9 - 16
Added by A.L.No.6

9. Identification of protective treatments on drawings.- Except where no final treatment is to be applied to an assembly or component, the protective treatment is to be specified by quoting the appropriate Process Specification number (see paras.19, 24, 26 and 40) on each detail drawing and also on each assembly and component drawing.

10. For uncamouflaged airframes and internal parts of camouflaged airframes, the drawings are to specify the colour of the finishing coats. The colour is to be selected from black, white, nivo, grey-green, aluminium or yellow as appropriate.

11. For external parts on camouflaged airframes the drawings are to specify the final treatment required by ~~A.D.M.332~~. D.T.D. Technical Circular 360.

12. Alternatively, the information required and indicated in paras.9 10 and 11 may be set out in the form of a schedule, provided that, in this form, the information can be given comprehensively enough for the use of sub-contractors, that the schedule contains full details concerning the colours of the finishing coats, and that full reference is made to the relevant Process Specifications. Such a schedule is to be included in the master tracings.

13. Where a sub-contracting firm prepares a schedule of protective treatments this is to be included in the master tracings.

14. Application of protective treatments.- Protective treatments are to be applied in accordance with the relevant Process Specifications. When reference is made to Specifications, Aircraft Design Memoranda and Standard Instruction Sheets, the latest issue of these publications is implied.

Protection of ferrous components

15. Introduction.- All ferrous components, including exhaust systems, are to be protected against corrosion in accordance with the following requirements.

16. Class 1 Protective Treatment.- In general, steel detail parts are to receive one of the following treatments.

(i) Metallizing with aluminium* in accordance with Specification D.T.D.906. No further protective treatment is then required, but parts may be coated with organic protective at the option of the contractor.

(ii) Cadmium or zinc plating or sherardizing† in accordance with Specifications D.T.D.904 (cadmium plating), D.T.D.903 (zinc plating) or D.T.D.908 (sherardising). The parts are then to be coated with one of the following organic protectives.

(a) Pigmented oil varnish and primer to Specification D.T.D.260.

(b) Stoving enamel to Specification D.T.D. 56 or 235.

(c) Cellulose enamel and primer to Specification D.T.D.63A.

(d) Matt cellulose finishes and primer to Specification D.T.D.308 or matt pigmented oil varnishes and primer to Specification D.T.D.314 (where camouflage treatment is specified, these protectives only are to be used).

17. Exceptions to Class 1 Protective Treatment.-

(i) Treatment after assembling.- If it is impracticable to apply a metal coating to the detail parts before assembling, then they are to be treated after assembling by one of the following methods.

---

* Metallizing is not suitable for light gauge parts owing to the loss of metal and rough surface produced by the preliminary abrasive blasting.

† Sherardizing is not to be used for parts made from steels whose mechanical properties would be seriously affected by the high temperature required by the process.

F.S./30

(a) Externally, by metallizing with aluminium or if this is not suitable, by coating with one of the organic protectives referred to in sub-paras. 16(ii) (a) to (d).

(b) If there are internal surfaces, these are to be coated with one of the organic protectives referred to in para.16(ii) or with temporary rust preventive to Specification D.T.D.279. This requirement does not apply to the internal surfaces of tanks or to the oleo leg components.

(c) The internal surfaces of completely sealed* parts require no protective treatment.

(ii) Non-corrodible steel parts.- Non-corrodible steel parts require no protective treatment except that the joint surfaces are to be protected as detailed in paras. 78 to 90. The parts may be painted after assembling in common with the remaining parts of the components concerned.

(iii) Tinned steel parts.- Tinned steel parts are to be treated in accordance with the following requirements.-

(a) Tinned steel tanks are to be painted externally with cellulose primer and enamel to Specification D.T.D.63A. The internal surface is to be left unpainted.

(b) Other tinned steel parts are to be painted, together with the surrounding structure, after assembling.

(c) All flux is to be removed from tinned steel tanks and parts by thoroughly washing and drying before they are painted.

---

* Complete sealing means sealing which does not rely in any degree on organic material or the perfection of a metal to metal fit.

(iv) Mild steel exhaust systems.- Mild steel exhaust systems are to be treated in accordance with the following requirements.-

(a) Manifolds and stub pipes are to be treated externally by aluminizing or nickel plating.

(b) Tail pipes and exhaust rings are to be treated externally by metallizing with aluminium or nickel plating.

(c) In an exhaust system parts of different metallic finish are not to be associated.

(d) If ordered as spare parts, mild steel exhaust system parts are to be coated internally with temporary rust preventive to Specification D.T.D.279.

(v) Surfaces within main planes, tail planes, etc.- The surfaces within main planes, tail planes and control surfaces may be finally treated with one coat of rust preventive to Specification D.T.D.279 instead of one of the organic protectives specified in sub-paras.16(ii) (a) to (d). D.T.D.279 is not to be used, however, on tanks, or in places which touch doped fabric, or where it is likely to be removed by rubbing against the clothing of personnel, etc.

(vi) Ball and roller bearings.- Ball and roller bearings and other moving parts which are normally lubricated require no protective treatment.

(vii) Bolts, pins, screws and similar assembly parts.- Bolts, pins, screws and similar assembly parts are to be given a metal coating in accordance with para.16(ii) and treated, together with the surrounding structure, after assembling.

F.S./31

(viii) Gun parts.- Gun parts, which are classed as airframe components and are subject to abrasion, e.g. deflector chutes, ammunition belt feeds and guides, etc., are to be treated with an approved chemical "browning" or "blacking" process, or by sherardizing where appropriate. When delivered as spares the parts are also to be protected with temporary rust preventive to Specification D.T.D.279.

(ix) Bullet-proof steel parts.- Bullet-proof steel parts are to be treated by the application of one of the organic protectives specified in para.16(ii) (a) to (d) or temporary rust preventive to Specification D.T.D.279.

18. Class 1A and 2 Protective Treatment.- Class 1A and 2 Protective Treatments are identical to Class 1, except that the metal coating of para.16 (i.e. metallizing with aluminium, zinc or cadmium plating or sherardizing) may be omitted for all parts, except mild steel exhaust systems, at the option of the contractor.

19. Application of Protective Treatments.- Protective treatments are to be applied in accordance with the relevant Process Specification. The Specifications referring to the processes called for in paras.16, 17 and 18 are given in the following table.

Process Specification	Description
D.T.D. 901	Processes for cleaning metal parts in preparation for protection against corrosion.
902A	Protection of metal parts against corrosion by means of organic protectives.
903	Zinc plating.
904	Cadmium plating.
905	Nickel plating.

Process Specification	Description
D.T.D.906	Metallizing.
907	Aluminizing.
908	Sherardizing.

Protection of components made from aluminium and from alloys with a high aluminium content

20. Introduction.- All components made from aluminium or from alloys with a high aluminium content, including parts or components designed by sub-contracting firms and covered by the relevant specifications, but excluding airscrews, are to be protected against corrosion in accordance with the following requirements.

21. Class 1 Protective Treatment.-

(i) Hulls and Floats.- Hulls and floats of seagoing aeroplanes, if constructed in light alloy, are, so far as sheet metal parts are concerned, to be manufactured in aluminium coated wrought aluminium alloy to Specifications L.38, L.47, D.T.D.275 or D.T.D.390.

(ii) As the final treatment, the external surfaces are to be given two coats of primer of different colours followed by one coat of cellulose enamel to Specification D.T.D.63A, pigmented with aluminium powder. The first coat is to be brushed but subsequent coats may be sprayed. If camouflage treatment is required, material to Specification D.T.D.308 is to be used in lieu of material to Specification D.T.D.63A.

(iii) Standard treatment for detail parts.- Parts, with the exception of those mentioned in para.22, are to be given the complete treatment of anodic oxidation followed by a coating of one of the organic protectives indicated in sub-paras.16(ii) (a) to (d).

F.S./32

22. Exceptions to Class 1 Protective Treatment.-

(i) Parts made of aluminium-coated wrought aluminium alloys to Specifications L.38, L.47, D.T.D.275 or D.T.D.390.- Such parts need not be anodized, but are to be painted externally with one of the approved organic protectives specified in sub-paras. 16(ii) (a) to (d). The internal surfaces of such parts need not be painted except where required for purposes other than protection against corrosion.

(ii) Tanks.- Fuel and oil tanks made of one of the above materials, and oil tanks made of aluminium need not be anodized. Other fuel and oil tanks are to be anodized internally and externally unless otherwise agreed by D.T.D. The anodizing is to be carried out before riveting or after welding. All tanks are to be coated externally with primer and cellulose enamel to Specification D.T.D. 63A, or D.T.D.308 if camouflaged.

(iii) Drinking water tanks are to be anodized internally and externally before riveting or after welding. The interior surfaces are then to be coated with clear varnish to Specification D.T.D.234. The exterior surfaces are to be painted with one of the organic protectives indicated in sub-paras. 16(ii) (a) to (d).

(iv) Castings need not be anodized.

(v) Cowlings (see para.73).- Cowlings which are not readily removable are to be anodized and given final treatment with primer and cellulose enamel to Specification D.T.D.63A, or D.T.D.308 if camouflaged, both inside and outside.

(vi) Cowlings and panels which are readily removable need not be anodized, but are to be coated with the organic protective as indicated in sub-para.(v).

(vii) Tubes.- Tubes under $\frac{3}{4}$ in. in diameter are to be anodized externally and coated both externally and internally with one of the organic protectives of para.16(ii) (a) to (d),

except that tubes used for fuel, oil, water, ethylene glycol, air (including pressure head tubes) and oxygen are not to be painted internally.

(viii) Aluminium tubes to B.S. Specification T.9 under $\frac{3}{4}$ in. in diameter, supplied in coils, need not be anodized, but are to be painted externally with one of the organic protectives of para.16(ii) (a) to (d) after being run into position on the airframe.

(ix) Tubes of $\frac{3}{4}$ in. diameter and over used for fuel, oil, water, ethylene glycol, air or oxygen are not to be painted internally.

(x) Fireproof bulkhead plating.- Fireproof bulkhead plating is to be painted on the outer faces with one of the organic protectives of para.16(ii) (a) to (d).

(xi) Bolts, pins, rivets and similar assembly items.- Bolts, pins, rivets and similar assembly items are to be anodized before assembling and painted after assembling in common with the surrounding structure.

(xii) Surfaces within main planes, tail planes etc.- Surfaces within main planes, tail planes and control surfaces may be treated with one coat of rust preventive to Specification D.T.D.279 instead of one of the organic protectives specified in sub-paras.16(ii) (a) to (d). D.T.D.279 is not to be used, however, on tanks, or in places which touch doped fabric, or where it is likely to be removed by rubbing against the clothing of personnel, etc.

23. Class 1A and 2 Protective Treatments.- The requirements for Class 1A and 2 Protective Treatments are identical with those for Class 1 Protective Treatment, with the following exceptions.-

(i) Anodizing may be omitted on.-

(a) Parts made up from sheet and strip, including fuel and oil tanks, except in the case of material to Specifications D.T.D.206, 270 or 356.

AP 970 Design Requirements for Aeroplanes AL25-37 19460801 OCR.pdf Page 627

(b) Tubes which are not of structural importance.

(ii) Anodized parts may be drilled, punched or sheared after anodizing.

24. Application of Protective Treatments.- Protective treatments are to be applied in accordance with the relevant Process Specification. The Specifications referring to the processes called for in paras.21, 22 and 23, are given in the following table.

Process Specification	Description
D.T.D. 901	Processes for cleaning metal parts in preparation for protection against corrosion.
902A	Protection of metal parts against corrosion by means of organic protectives.
909	Protection of the interior of drinking water tanks by means of a clear varnish.
910A	Anodic oxidation.

Protection of components made from alloys with a high magnesium content

25. Introduction.- All components made from alloys with a high magnesium content, including parts or components designed by sub-contracting firms and covered by the relevant Specifications, but excluding airscrews, are to be protected against corrosion in accordance with the following requirements.

26. Class 1, 1A and 2 Protective Treatments - Standard Treatment.- Components, with the exception of those mentioned in para.27, are to be treated in accordance with the requirements of

S.I.S. No.85. This treatment consists of the chromate process* followed by enamelling.

27. Exceptions to the Standard Treatment.- Fuel and oil tanks are not to be coated internally with the organic protective of clause 4 of S.I.S.85.

28. Protective cartridges for fuel tanks.- In each fuel tank an approved type of protective cartridge is to be secured in a position as low as possible and where it is accessible for renewal. Details are given in the following sub-paragraphs.

(i) Reason for use of inhibitors.- The corrosive effects of fuels, and particularly of fuels containing tetra-ethyl lead, are much increased by the presence of free water, corrosion tending to occur where the water lodges.

(ii) Design of cartridge.- Normally the cartridge is a small fabric bag filled with the corrosion inhibitor and held in a perforated metal cage which should preferably be made of the same material as the tank.

(iii) Composition of inhibitor.- The following inhibitors may be used in magnesium alloy tanks.-

(a) Zinc chromate (high purity)

(b) Calcium chromate (high purity)

(c) Sodium fluoride

(iv) Where sodium fluoride is used as inhibitor in magnesium alloy tanks, it is essential that the tanks shall be in the chromate-treated condition.

---

* Patent rights in the chromate baths now specified in clause 3 of S.I.S.85 are claimed by Major C.J.P.Ball of Messrs. Magnesium Electron Ltd., and the use of the methods is in no way authorized except in connection with work carried out for the services of the Crown.

F.S./34

(v) Amount of inhibitor.- The amount of inhibitor usedshould be 1 oz. per 100 gallons tank capacity.

(vi) Period of Service.- The cartridges should normally only require renewal about once a year.

(vii) Position of cartridges.- The cartridge containing the inhibitor is fixed so that any free water present will come into contact with it. It is important that the cartridge should be so placed that small quantities of free water will reach it as easily as large quantities. The best places are the lowest part of the tank or the lowest part of a retractable sump. Some of the perforations of the cage should be bounded on their lowest side by the tank or sump bottom, to permit unrestricted passage of fuel or other liquid over the floor of the tank and through the cartridge.

(viii) Fixing of cartridges.- The cartridge should be held in position so that it cannot become dislodged. The cage may be attached to the tank or sump by any convenient means, e.g. welding or riveting, but access for the renewal of the cartridge is to be provided.

(ix) Material of cartridge bag.- The material of the bag containing the inhibitor should be of closely woven cotton lawn, or other closely woven fabric, and both the bag and any binding material used for closing the bag should be boiled in 0.5 per cent. caustic soda solution for 30 minutes, washed in changes of boiling distilled water and dried before use.

(x) Size of cartridge container.- To hold a bag containing 1 oz. of inhibitor, a perforated cylinder measuring 2 in.dia. and $2\frac{1}{2}$ in. long would be of convenient size.

Protection of wooden components

29. Introduction.- All wooden parts of airframes are to be protected against deterioration as indicated in the following requirements.

Protection of wooden components (cont'd)

30. External plywood surfaces.- External plywood surfaces shall be protected in accordance with Specification D.T.D.912A.

31. Internal surfaces.- The internal surfaces of ply covered components and hollow members need be protected only where a colour finish is required. Protective treatment however shall not be applied to any surface which later requires to be glued (such as the final section of a ply covered component) since there will be difficulty in avoiding fouling of the glued areas. When end grains of members such as spars are within ply-wood components, such end grains shall be protected with bituminous paint to B.S. Specification X9.

32. Fabric covered components.- Wheel bays, bomb bays and the structure of fabric covered components shall be protected by one coat of primer and two coats of aluminium pigmented cellulose enamel to Specification D.T.D.63A and, where necessary, camouflage finish. All knots shall first be treated with an approved knotting solution.

33. Those surfaces making contact with fabric during doping operations shall have an additional coat of dope resisting paint to B.S. Specification X.4 or an approved substitute.

34. Accumulator stowages.- Accumulator stowages and parts in the vicinity of accumulators which may be affected by the electrolyte or spray from the electrolyte shall be given two coats of the appropriate organic protective specified below, or an approved alternative. Application may be either on the unpainted woodwork or on top of the normal protective coating.

(i) acid accumulators - acid resisting paint to B.S. Specification X.19.

(ii) alkaline accumulators - bituminous paint to B.S. Specification X.9.

35. Miscellaneous.- Floors and cat-walks shall be treated with creosote to B.S. Specification No.144 or with the finish specified under para.32 above or other approved alternative.

36. Bolt holes in wooden members are to be treated with rust preventive to Specification D.T.D.279.

FS/60

Protection of wooden components (cont'd)

37. The bilges of wooden hulls are to be protected by bituminous paint to B.S. Specification X.9.

(Paras. 38, 39 and 40 have been deleted)

Protection of copper, brass and bronze parts

41. Class 1 Protective treatment.- Brass and bronze parts on seagoing aeroplanes, other than bushes and bearings, shall be treated with one of the following organic protectives.

(i) Stoving enamel to Specification D.T.D.56 or D.T.D.235.

(ii) Cellulose enamel and primer to Specification D.T.D.63A.

(iii) Pigmented oil varnish to Specification D.T.D.260.

42. Class 1A and 2 Protective Treatments.- Brass and bronze fittings need not be protected.

43. Interchangeability.- Parts which are interchangeable between aeroplanes requiring Class 1 treatment and those requiring Class 1A or 2 treatment are to receive Class 1 treatment.

Corrosion of bolts to B.S. Specifications S.61 and S.62 in wooden members subject to wetting in service

44. It has been found in practice that bolts made of material to the above Specifications have been seriously weakened by corrosion in places where they pass through wooden members which are liable to become wet in use, as for example, the spars of the lower main planes and the tail plane spars of flying boats and seaplanes.

45. For this reason, S.61 and S.62 materials are not to be used for bolts and other parts in contact with wood on flying boats and seaplanes.

46. S.80 is a material suitable for such use. A.G.S. parts 863 - 867 inclusive (nuts) and A.G.S. parts 868 - 869 (bolts) are the current parts which are to be called for on drawings.

Prevention of corrosion due to electrolytic action between dissimilar metals

47. Serious defects due to corrosion have occurred due to electrolytic action between dissimilar metals in juxta positions in the presence of moisture.

48. The use of approved jointing compounds (i.e. pigmented varnish jointing compound to Specification D.T.D.369 or rust preventive to Specification D.T.D.279) may not always prevent electrolytic corrosion, due to the difficulty of obtaining an adequate layer of jointing material between the contact faces. For example, difficulty in obtaining satisfactory insulation is to be expected

AP 970 Design Requirements for Aeroplanes AL25-37 19460801 OCR.pdf

in the case of a stainless steel end socket which is a push fit into an aluminium alloy tube, due to the removal of the jointing compound on the insertion of the socket into the tube.

49. In such cases, it is essential that careful consideration be given to the selection of the materials in order to avoid a potential difference greater than approximately 0.25 volt.

50. The following table shows such typical values as are available of the E.M.F. between various materials and a calomel electrode immersed in sea water. The E.M.F. between any pair of materials is equal to the difference of the values given for each. The material having the higher potential value will tend to corrode in contact with the material of lower potential.

Material	Potentials (volts) against calomel electrode immersed in sea water at 25°C.
Aluminium and Aluminium alloys	
Duralumin, heat treated and aged.	0.65
RR Alloys	0.73
L.33	0.81
MG7	0.81
MG5	0.82
Aluminium	0.82
Brass, Bronze, etc.	
Monel Metal	0.20
Gunmetal, Tungum	0.21
Copper	0.22
Cupro-Nickel (70:30)	0.22
Phosphor Bronze	0.22
45% Nickel Alloy	0.23
Aluminium Brass	0.26
Aluminium Bronze	0.26
Brass	0.27

Material	Potentials (volts) against calomel electrode immersed in sea water at 25°C.
Steels	
Stainless	
Austenitic	
e.g. D.T.D.166,171,176,189,207,211.	0.20
High Chromium	
e.g.S80, D.T.D.60,146,168,185,225.	0.35
12% Chromium	
e.g.S61,S62,S85, D.T.D.161,203,	0.45
D.T.D.46A.	0.58
Non-stainless	
S88	0.62
S65	0.71
S4	0.72
D.T.D.138	0.72
S2	0.73
S6	0.76
S21	0.76
S84	0.79
Magnesium Alloys	1.59
Miscellaneous	
Cadmium (plating)	0.82
Zinc (plating)	1.13
Tin (tinned steel)	0.50
Tinman's Solder	0.51
Zinc-cadmium solder	1.10

51. Typical examples of components in juxta positions which have caused defects in the past and which are to be avoided in the future are.-

F.S./37

(i) Stainless steel end sockets, pins, rivets, screws, etc. in contact with aluminium or aluminium alloy. Stainless steel is to be cadmium plated.

(ii) Copper, brass, tungum, etc. pipe lines running along aluminium alloy spars. Contact between the pipes and the alloy is to be avoided, whether by direct contact or through trapped water.

(iii) Brass end fittings of flexible pipes mating with aluminium alloy threaded parts, and vice versa. The end fittings and threaded parts are to be made of the same materials.

(iv) Brass, monel, tungum, 45 per cent. nickel alloy, etc. rivets in aluminium and aluminium alloy structures. The rivets are to be tinned and cadmium plated.

(v) Brass wood screws passing through aluminium or aluminium alloy. The screws are to be tinned and cadmium plated, but cadmium plated steel screws are preferable.

(vi) Copper terminals in contact with aluminium or aluminium alloy for bonding purposes. Chapter 711 requires that material used for bonding is not to introduce the possibility of electrolytic action.

Miscellaneous items

52. Use of leather.- Contact between leather and metal parts is to be avoided.

53. Use of rubber.- Natural rubber is not to be used for fuel pipe joints.

54. Sound-proofing materials.- These materials are generally absorbent of water and therefore likely to form sources of corrosion. If they are treated with chemicals, e.g., to make them fireproof, then the danger of corrosion may be greater. Precautions are therefore to be taken to prevent moisture getting at sound-proofing materials, whether by condensation, by seepage through plates or by any other means.

55. Hydraulic mechanisms.- The external surfaces of hydraulic mechanisms containing fluid to Specification D.T.D.391 and neighbouring parts likely to come into contact with the fluid shall be protected finally with an approved primer and cellulose acetate finishing coat.

56. Cables.- All flexible cables, except those made of stainless steel shall be soaked in temporary rust preventive to Specification D.T.D.279 before assembling on the aeroplane. Any excess of this protective shall be removed from those portions of the cable which will come into contact with pulleys, fairleads, etc., in order to avoid subsequent contamination of these parts by dust and grit.

+ Design precautions

57. General.- The following design requirements are intended to prevent, as far as possible, the deterioration of components due to exposure to the weather.

58. Exclusion of water.- Particular care shall be taken to prevent water leaking or being driven into covered components either on the ground or in flight, especially at all joints. Simple metal cover strips over joints are not permissible as a means of meeting this requirement.

59. Where it is found impossible to prevent the entry of water due to moving control members, tail wheels, retractable parts, etc., the compartments concerned shall be isolated and effectively drained so that the water will not enter other components.

60. Windows, doors, inspection doors and emergency exits in cabins and fuselages shall be suitably sealed to prevent the ingress of water.

61. Drainage.- Ample drainage holes and passages shall be provided in all components, particularly in the vicinity of glued joints where moisture, rain or spray may collect. These holes shall be large enough not to become blocked easily by swelled glue or flaked paint. External drainage holes shall be not less than $\frac{1}{4}$ in. diameter and where practicable of at least $\frac{1}{2}$ in. diameter.

62. All holes shall be free from internal raised lips or burrs; external holes for plywood covered components should be

---

+ From J.A.C. paper No.175.

ϕ See para.95. Drainage Tests on Wooden Components.

FS/64

plain holes whenever practicable. The shape and position of external holes shall be such that water is not forced into the components during flight.

63. The position of these drainage holes shall be shown on the drawing of the component and a complete key to all drainage holes shall be given in Volume 1 of the Aircraft Handbook.

64. In deciding the positions, the aeroplane shall be considered both in the normal attitude of rest, and in the level flying attitude.

65. Items such as the lower booms of channel-section ribs, struts with open ended socket fittings at the top and closed ends at the bottom, control levers which are exposed and can trap any rain or spray which runs into them, shall have drainage holes to prevent the accumulation of water. As the drilling of such holes may be difficult after assembling, the matter shall be given due consideration early in the design stage.

66. Provision shall also be made to ensure that any water which may collect under loose floors or loose floor coverings will quickly drain away.

67. Inspection holes.- Inspection doors in the planes and control surfaces of all landplanes or Naval aeroplanes shall be located in the under surface unless access to a particular component is possible only from an upper surface. For float seaplanes and flying boats, the doors shall be in the upper surface for monoplanes and in the upper surface of bottom planes and the lower surface of top planes for biplanes. When these normal inspection doors do not permit of adequate inspection to ensure that drainage has been effective, additional inspection holes shall be provided solely for this purpose.

68. Ventilation.- Effective ventilation shall be provided for all covered components.

69. Tanks.- Tank design should aim at preventing water and other foreign matter collecting at any point where it is likely to accelerate corrosion. Corrosion failures have occurred through the sump drain plug permitting a residue of foreign matter to remain after the tank has been drained. Provision for drainage shall be arranged so that complete drainage can be carried out in the refuelling attitude of the aeroplane.

70. Particular care is necessary in the case of exposed tanks on seagoing aeroplanes. The tops of such tanks should present a flat or domed surface without a lipped-up edge, so that any spray or moisture can freely drain off.

71. In the case of light alloy tanks, necessary anodic or other treatment appropriate to the particular alloy is to be carried out externally and internally, and the design is to be such that, where necessary, cathodes can be introduced into the tank through inspection or sump holes.

72. Plating of assembled components.- Attention is drawn to the danger of the electrolyte filtering into the interstices, and to the difficulty of its subsequent removal. Internal corrosion due to the presence of this electrolyte is almost certain to arise and in such cases electrolytic plating is unsuitable.

73. Construction of cowling (see also sub-para.22(v)) - The methods of stiffening the edges of engine and other cowling panels are not to be liable to induce corrosion. The following methods are recommended.

(i) Beading the edge of the panel over light alloy wire or tube, according to the size of beading required.

(ii) Bending the material of the panel over on itself so as to form a double thickness edge.

74. Whatever method of stiffening is adopted, the surfaces in contact are to be treated according to the requirements of para.16(ii).

75. The ends of tubing used to form the beading are to be sealed.

76. Packings between light-alloy piping and clips.- The following materials only are approved for use as packings between light-alloy piping and clips.-

(i) Varnished Langite.
(ii) Langite and an approved shellac solution.
(iii) Varnished cotton braiding, e.g. Secura or Systoflex.
(iv) Red fibre to Specifications B.S. 216/1926 or D.T.D.37A.

F.S./39

77. Reference should be made to para.87 with regard to the precautions for pipes.

Precautions and treatments during assembling

78. Contacts between dissimilar materials.- All contact surfaces between dissimilar metals, i.e. those having a potential difference greater than 0.25 volts (see paras. 47 to 51), between metal and wood, and between metal and fibre are to be treated before assembling with pigmented varnish jointing compound to Specification D.T.D.369 and assembled whilst still wet. Sufficient jointing material is to be used during assembling to produce a fillet at the joint.

79. Contacts between similar metals.- All contacts between similar metals (see paras. 47 to 51) are to be treated before assembling with either a pigmented varnish jointing compound to Specification D.T.D.369, or a rust preventive to Specification D.T.D.279 or an approved undercoating and primer. "Wet" assembling is not necessary unless it is required to make a water tight joint.

80. Internal surfaces of dissimilar materials.- Where rust preventive to Specification D.T.D.279 is used on internal surfaces (see para.17(v)), it may also be used as a jointing compound.

81. ~~Bolt holes in wooden members.- All bolt holes in timber are to be treated with rust preventive to Specification D.T.D.279.~~ (see para.36)

81. Tank jointing materials.- Jointing materials used in the construction of fuel, oil and water tanks are to be proprietary articles approved in A.D.M.275 or are to comply with the requirements of Specifications D.T.D.219 or D.T.D.295.

83. Jointing material used in the seams of light alloy riveted tanks is not to be shorter than the seams. Where changes of direction occur, the jointing materials are to overlap their full width, scarfing being adopted to reduce the thickness of the overlap.

84. When used in the construction of water tanks, jointing material to Specification D.T.D.219 is to be coated with seaplane

varnish to B.S. Specification X.17 which shall be allowed to dry before assembling.

85. Tank strap packings.- Tank strap packings shall be treated with an approved protective.

86. Flexible end connections on pipes.- Where flexible end connections are used for pipes, that portion of the pipe in contact with the end connections shall be painted with one of the organic protectives given in sub-paras.16(ii) (a) to (d).

87. Pipe clips and packing material.- The clips and packing material used to secure pipes shall not be placed in position until the pipe has received its final protective treatment.

88. Bonding of pipes.- Where a protective coat has been applied to the ends of a pipe in contact with the end fittings of flexible connections, bonding by the copper strip method (Chapter 711) is not acceptable. In such cases bonding by means of clips to the unprotected pipe shall be used. The bonding clips and neighbouring pipe where the protective coating has been removed shall be given a coat of protective similar to that used originally, except that an air drying enamel may be used in place of a stoving enamel.

89. Spot-welded joints and non-structural components.- The above requirements do not apply to spot-welded joints nor to lockers, stowages, and similar non-structural components.

90. Surfaces liable to touch fabric during doping operations.- Dope resisting paint to B.S. Specification X.4, or an approved substitute, shall be applied in addition to the normal protection (unless the protective is itself dope resistant, i.e. Specification D.T.D.56 or D.T.D.235,) to those painted surfaces which may make contact with the fabric during the doping operations. This requirement does not apply to surfaces to which the fabric is secured by an adhesive, but the adhesive shall have been approved for the purpose by the D.T.D.

Precautions and treatments after assembling

91. Any damage to the organic protective coating which may occur during assembling or electrical bonding shall be rectified by local application of the protective or by applying the original protective to the complete component.

92. All bonding clips used in any part of the aeroplane shall be treated after fitting to exclude moisture, by means of the application of a similar organic protective to that used on the surrounding structure.

93. Where the initial protective is stoving enamel, air drying enamel may be used for treatment after assembling.

FS/61

94. Fuselage interiors, other than provided for in para.31, shall be painted with a primer and a grey-green matt finish to D.T.D. Specification 308 or 314.

Tests

+ 95. Drainage of wooden components.- The contractor shall provide, and test as follows, one specimen of each major wooden component. Components shall be selected from one of the first fifteen production aeroplanes.

96. The component shall be set up at the attitude it would assume with the aeroplane in the normal attitude of rest on the ground or on the water. The component shall be tested as far as possible in its final condition, complete with any attachments or fittings which might affect drainage. To permit close examination during the test part of the top or of the side skin should be removed. (So that production conditions may be simulated more nearly, it is preferable to make a test on a completed component with the skin removed. Where conditions are such that this is impracticable, the test may be made on an uncompleted component on which the top skin has never been attached).

97. The component shall then be drenched with water. The water shall drain away completely within five minutes.

98. The component shall then be kept damp for 3 to 4 hours. If casein glue has been used this will give an opportunity for the glue fillets to swell and crumble; if synthetic resin glue has been used it will give an opportunity for the glue fillets to crack away from the wood. No attempt shall be made to remove any glue fillets which may have become detached from the joints.

99. The component shall then be drenched with water for a second time, and the water shall drain away completely within five minutes.

100. If the component does not pass the tests of paragraph 97 and 99 the drainage and/or glueing arrangements shall be modified accordingly.

101. R.A.E. (Materials Department) shall be informed when drainage tests are being considered for any particular aeroplane so that a suitable test programme can be arranged and witnessed by a representative of that department.

+ From J.A.C. Paper No.191.

RELEVANT M.O.S. PUBLICATIONS

Aircraft Design Memoranda

No. 500/31 - Electrical A.G.S. Parts
No. 507 - Substitution of zinc plating for cadmium plating

Airworthiness Technical Notes

No. 123 - Design stresses for glued joints
No. 138 - Prevention of deterioration of wooden components

Scientific and Technical Memoranda

No. 1/43 - Temperature and moisture content conditions in wooden aircraft wings and their influence on the durability of glued joints
No. 5/43 - Tests on synthetic resin adhesives for plywood
No.19/43 - Synthetic resin glues

D.A.R.D. Technical Circulars

No. 8 - Camouflage and identification marking of aircraft (see also D.T.D. Technical Circular No.360)

CHAPTER 802

TRANSPORT, HANDLING AND STORAGE

Amended by A.L.No.28

CHAPTER 802

TRANSPORT, HANDLING AND STORAGE

Sizes and packing

1. The requirements of paras.2 to 5 inclusive shall be met on the following basis,-

(i) For aeroplanes up to 100,000 lb. A.U.W. the requirements shall be met in full.

(ii) For aeroplanes over 100,000 lb. and up to 150,000 lb. A.U.W. the requirements shall be considered individually in the light of the role and construction of the aeroplane.

(iii) For aeroplanes above 150,000 lb. A.U.W. the requirements may be disregarded.

2. The aeroplane shall be sub-divided into components as indicated in Table I and the individual components, including cases, shall not exceed the size and weight limitations given in Table II. The following allowances for thickness of case walls should be made:-

4" for each side and end
6" for the top
5" for the bottom

3. All components shall be such that they can be conveniently stored and handled without elaborate supporting crates, but the use of jury struts to render components self supporting is permissible.

4. Components should have no projecting portions liable to be damaged, and brackets and fittings in this category should be readily removable for packing and transport.

5. The component parts of wings and tail unit surfaces shall be packed vertically or flat in the cases and diagonal packing to comply with the limiting dimensions is not acceptable. It should be possible to store wing components with the chord vertical.

Ground handling

6. The aeroplane shall be designed with a view to the fullest possible use being made of standard R.A.F. or Naval equipment, as appropriate, for servicing and maintenance. For example:-

(i) Moving the aeroplane on the ground
(ii) Filling tanks (see Chap.703)
(iii) Re-arming (see Chap.713)
(iv) Routine overhauls of the engine(s) and airframe
(v) Removing and handling an engine
(vi) Removing and handling an auxiliary power unit, if fitted.
(vii) Jacking-up the aeroplane.

7. Typical items of ancillary equipment which the Contractor may be required to supply are as follows:-

(i) Aeroplane gantry for engine changing
(ii) Ladders for reaching the engine(s), tanks or other parts
(iii) Jacks to lift and support the aeroplane
(iv) Wing and tail trestles
(v) Tail towing and steering arms
(vi) Tackle for handling auxiliary power units, if fitted
(vii) Slings for handling engines and the larger parts of fuselage and wings.

8. Particulars of standard equipment are obtainable, on written application, from the Directorate of Technical Development (R.D.T.2c). For particulars of Naval equipment application should be made to D.A.M.R., Admiralty.

Jacking

9. The design of the aeroplane shall provide for its being jacked up or otherwise supported in a secure manner. The arrangements made for this purpose shall not entail elaborate forms of support or require that the aeroplane be slung. The strong points for jacks and/or trestles shall be easily accessible and clearly marked. The jacking points should be cup shaped to receive the ball-heads of standard jacks to enable the aeroplane to be jacked in any attitude, from at rest on the ground, up to the flying attitude.

10. On multi-engined landplanes two jacking points shall be provided on each side of the aeroplane in addition to any trestling point at the rear end of the fuselage, and the following conditions shall be complied with:-

(i) The two points on each side shall be far enough apart to give room for the feet of jacks or trestles, when both points are in use simultaneously.

(ii) The aeroplane shall be stable and its strength shall be satisfactory when supported on the two outer points, the two inner points, or one outer and one inner jacking point. The strength requirements are given in Chapter 310.

B

11. The arrangements for jacking shall provide for,-

(i) removal of the undercarriage and other parts,

(ii) checking the operation of the retractable undercarriage and nose or tail wheel (for aeroplanes with orthodox undercarriage this shall not necessitate raising the tail to the flying attitude), and

(iii) removing deflated undercarriage wheels and nose or tail wheels.

Slinging

12. Components.- For all aeroplanes slinging points shall be provided on the engine and the larger parts of wing and fuselage.

13. Engine.- For R.A.F. types a hoist for attaching to the aeroplane shall be provided, to enable a change of engine to be made. The hoist shall be primarily suitable for operation when the aeroplane is at normal ground incidence. For aeroplanes with orthodox undercarriage it should also be possible, as a secondary requirement, to hoist the engine with the aeroplane in the tail-up attitude.

14. Naval aeroplanes.- For Naval types, provision shall be made for hoisting the aeroplane, with wings either folded or spread. For floatplanes, amphibians, and ship-planes convertible to floatplanes, hoisting arrangements shall be in accordance with S.I.S.374. If a ship-plane is not convertible to a floatplane the slinging gear may be ground equipment, and the slinging ring or shackle need not necessarily be of the form and dimensions shown in the S.I.S. The wings spread attitude shown in S.I.S.374 is applicable to all aeroplanes with catapult spools. In the wings folded attitude, the lowest point of the tail wheel shall not be below the lowest point of the main undercarriage tyres. If this is impossible with the slings provided to give the specified attitude with wings spread, then additional slings are required as ground equipment. The slings for floatplanes and amphibians shall be stowed and secured in the aeroplane at the slinging position, and the arrangements shall be such that the slinging shackle can be easily engaged with, and disconnected from, the hoisting gear hook. On all types the hoisting sling shall be suitable for use with the Admiralty type of quick release coupling.

Slinging (cont'd)

15. Flying boats.- The primary requirement for the slinging gear is that it shall be suitable for lifting the boat in emergency at any port provided with suitable lifting facilities. Normally slings will not be carried in the flying boat but attachments shall be provided for them, and blue prints from which suitable slings can be made up locally in emergency will be carried in each boat.

16. All flying boats designed for the Royal Air Force shall be designed for slinging by a simple form of slinging gear with the point of support not more than a chord's length above the top of the plane. The use of spreaders in the slinging gear should, if possible, be avoided but if essential they shall be at least six feet above the top plane to reduce the risk of injury to personnel when hooking on with the boat rising and falling in the sea.

17. The slinging gear and its attachments on the aeroplane shall be such that the whole of the slinging gear can be made up in a shipyard at any port in 12 hours, and all materials called for on the drawing shall be such as can be found in any port or shipyard; thus the use of high tensile steel or anything beyond plain rolled steel sections is not acceptable. In the case of simple spreaders wood may be called for as an alternative to steel sections, and where such is the case the two alternatives should be given on the drawing. The sling attachments permanently in place on the aeroplane may be made of any high tensile material suitable for the purpose, but the remainder of the slinging gear should be called for with commercial quality material.

18. If a ring is used for the top attachment, the internal dimensions shall be not less than 6" x 3" for boats up to 10,000 lb. and not less than 6" x 4" for boats of larger sizes. Steel plate checks with distance rollers and through bolts may be easier to manufacture locally than forging a ring.

19. The design of the attachment of the slings to the aeroplane shall be suitable for quick and simple attachment or release in adverse conditions. Bolts or pins fitting into holes with little clearance, or any fittings requiring fine adjustment are not acceptable. Shock absorbing gear need not be provided.

20. Single engined aeroplanes.- On all single engined aeroplanes, strong points shall be provided suitable for the rapid attachment of lifting tackle to enable the aeroplane to be hoisted by crane or similar lifting device. Screwed sockets designed to receive suitable eyebolts form an acceptable means of meeting this requirement.

Towing

21. General.- Provision shall be made for towing all aeroplanes as follows:-

C

Towing (cont'd)

(i) Aeroplanes up to and including 20,000 lb. all-up weight shall have provision for being towed forwards on the ground, as a routine manoeuvre. Provision shall also be made for backward towing as an emergency manoeuvre only (see also para.24).

(ii) Aeroplanes greater than 20,000 lb. all-up weight shall have provision for being towed both forwards and backwards on the ground as routine manoeuvres. The provision for both forwards and backwards towing shall be in accordance with S.I.S.63.

(iii) All Naval aeroplanes, except amphibians, shall have provision for being towed both forwards and backwards on the ground or on the deck of an aircraft carrier, as routine manoeuvres.

(iv) Naval amphibian aeroplanes shall have provision for being towed forwards on the ground or on the deck of an aircraft carrier as a routine manoeuvre. Provision shall also be made for backward towing as an emergency manoeuvre only.

22. The above involves the inclusion of suitable strong points on the aeroplane to which tow ropes or rigid towing bars may be attached (see Chapter 310).

23. Methods.- The following towing schemes have been found generally satisfactory and are acceptable. Appropriate design loads are given in Chapter 310.

(i) Tail-wheel type undercarriages:-

(a) Forward towing of all aeroplanes in accordance with S.I.S.63.

(b) Backward towing of aeroplanes up to 20,000 lb. by a towbar incorporating an overload release attached to the swivelling tail wheel unit so that independent steering is not required.

(c) Backward towing of aeroplanes over 20,000 lb. by a standard tow-bar+ attached to the swivelling tail wheel unit in accordance with S.I.S.No.63.

(ii) Nose-wheel type undercarriages:-

(a) Forward towing in accordance with S.I.S.No.63 but with a steering bar from the tractor to the nose wheel. An acceptable steering bar is of telescopic construction and incorporates a shock absorber to prevent excessive loads on the nose wheel unit.

+ Information regarding standard tow-bars may be obtained from RDT2(c).

(Forward towing from the nose wheel unit by a rigid tow-bar incorporating an overload release is also acceptable.)

(b) Backward towing by a rope bridle with apex at the tractor and ends attached to strong points on the main wheel unit.

24. It is not intended to exclude the use of other towing schemes. When an alternative scheme appears advantageous, details should be submitted to D.R.M. for approval of the scheme in principle. The Director, R.A.E. (S.M.E.Dept.) can advise on suitable design loads. A scheme for backwards towing which involves the use of fixed attachment points on the main wheel units, or near the rear end of the fuselage, in conjunction with an independent tail steering arm is, however, not acceptable as a routine manoeuvre.

FS/87

TABLE I≠

Aeroplanes - Size categories

Category	Span	Transport method on ship.	Component category (see Table II)
I	Not exceeding 35'0".	All packages 'tween decks.	A and B
II	Exceeding 35'0" but not exceeding 45'0".	All packages below decks.	A, B and C
III	Exceeding 45'0" but not exceeding 60'0".	1 package deck cargo remainder below decks	1, D or E remainder A, B or C.
IV	Exceeding 60'0"	2 packages deck cargo remainder below decks	2, D or E, remainder A, B, or C.

For flying boats over 60'0" in span, only one component (i.e. the hull) may have dimensions outside those of Category F.

TABLE II≠

Packed components - Size categories

Component category	Maximum weight (including case)	Max. external dimensions of case.			Transportable by	
		Length	Height	Width	ROAD	SHIP
A	2 tons	20'-0"	6'-6"	6'-0"	Sqdn Vehicle	'Tween decks
B	3 tons	30'-0"	6'-6"	8'-6"	Long Low Loader	'Tween decks
C	5 tons	30'-0"	9"-6"	15'-0"	Carrimore	Hold
D	3 tons	35'-0"	9'-6"	8'-0"	Long Low Loader	+Hold/ Deck
E	7 tons	40'-0"	10'-0"	12'-0"	Carrimore	Deck
Fϕ	2 tons	60'-0"	5'-0" (3'-0" at ends)	10'-0"	Long Low Loader	Deck+

+ For selected ships.

ϕ Transport category F may only be used with written authority granted by the Director of Technical Development, and such permission will normally be applied to the wings of high performance aeroplanes of wooden construction only.

≠ S.B.34296.

AP 970 Design Requirements for Aeroplanes AL25-37-19460801 OCR.pdf

RELEVANT M.A.P. PUBLICATIONS

Specifications

D.T.D. 1022 - Boat seaplane cradles.

Aircraft Design Memoranda

No. 356 - Lubricants for aeroplane parts.
No. 483 - Information required for maintenance, stowage, and transport of Naval aircraft components.

FS/37

CHAPTER 803

ROUTINE MAINTENANCE

FS/43

Issued with A.L.No.11

CHAPTER 803

ROUTINE MAINTENANCE

General

1. The routine maintenance of aeroplanes as conducted by service units consists of inspection and operations necessary to keep the aeroplane in a serviceable condition, and facilities to assist such work shall be provided.

2. It should be remembered that an operation easily performed in a well lighted and heated workshop may prove difficult in the open and under adverse climatic conditions with limited equipment.

3. The design shall cater for adequate maintenance with the least expenditure of man-hours. For all items, such as the engine, which require running adjustments, supports and foot-holds to facilitate work shall be provided.

4. For Naval aeroplanes consideration shall be given to the facilitation of routine maintenance when the wings are folded.

Inspections

5. The inspection and operations involved can be conveniently determined by dividing the aeroplane into a number of groups and considering the nature and frequency of the attention needed to the components of the structure and equipment. The arrangement of the groups is as follows:-

Propeller
Power plant
Undercarriage
Cabin or cockpit
Fuselage or hull
Tail unit
Main planes.

6. The frequency of the inspections and operations is considered in relation to the flying time periods of the aeroplane and to the use and wear to which parts are subjected. The degree of access provided should be determined in relation to the frequency of inspection and operation needed on the part.

7. The inspections normally consist of tests or examinations for damage, fracture, distortion, corrosion, security, and correct functioning. The operations cover cleaning, adjustment, lubrication, draining and replenishing.

8. Parts which require frequent inspection or replacement shall be easily accessible and fully visible to a mechanic working on them. If direct access is not available then inspection panels shall be provided for such parts. These panels shall be rapidly detachable without the use of special tools.

9. To enable the inspection of parts above the water line on flying boats to be carried out without beaching the aeroplane, attachment points shall be provided for the suspension of ladders or inspection platforms. One set of engine inspection platforms will be carried in the aeroplane and any additional platforms and ladders will be regarded as ground equipment.

Lubrication

10. The examination, adjustments and lubrication of all parts of the controls in the planes and elsewhere, shall be provided for. As far as possible, provision shall be made for the lubrication of all moving surfaces in contact by a grease gun of standardised design (see S.D.M.57) and for the exclusion of dust and water from these parts.

11. Lubricating nipples shall be in accordance with the requirements of S.D.M.28 and should, as far as possible, be grouped (see A.D.M.356 regarding preparation of lubrication charts) and readily accessible.

12. An efficient anti-freeze lubricant shall be used on all control circuit bearings and control chains (see A.D.M.356).

Use of small bolts

13. The use of 4 B.A. bolts or smaller sizes is undesirable where the removal of the nuts is likely to be necessary for maintenance operations, in that they are liable to be stripped or overstrained in tightening up. Where failures would lead to serious results these small sizes shall not be used.

Collars for H.T. steel pins

14. Where high-tensile steel pins (B.S.S. S.P.4. and A.G.S.384) are used to connect actuating levers and control rods or cables the rotary movement sometimes causes excessive wear on the small diameter split pin securing the high tensile pin in position. Provision shall be made to prevent this and an approved method is to fit a small collar (A.G.S.899) with the split pin through the hole provided in the collar.

Marking of undercarriage legs

15. Shock absorber units shall be provided with marks and/or pointers to enable ground personnel to check whether the units are in a safe working condition. Such marks and/or pointers may consist of.-

(i) a mark on the fixed portion of the unit and a mark on the movable portion of the unit so arranged that the distance between the two marks may be measured; or

AP 970 Design Requirements for Aeroplanes AL25-37 19460801 OCR.pdf Page 857

(ii) a mark on one portion of the unit and a pointer fixed on the other and so arranged that the distance between the mark and pointer may be measured; or

(iii) a graduated scale on one portion of the unit and a pointer fixed to the other so arranged that the distance may be read off on the graduated scale. Such a scale shall not show any markings other than the distance measurements.

Limitation of nut sizes

16. To avoid the possibility of nuts with threads of $\frac{3}{4}$" and $\frac{7}{8}$" nominal diameter being fitted by mistake to bolts with threads of 11/16" and 13/16" nominal diameter, thread diameters above $\frac{5}{8}$" shall be limited to steps of $\frac{1}{8}$" (i.e. odd multiples of 1/16" greater than $\frac{5}{8}$" are not acceptable).

Pneumatic systems - air pressures

17. High pressure pneumatic systems shall be designed to withstand safely a working pressure equal to that at which the bottles will be maintained in service, namely 450 lb./sq.in.

RELEVANT M.A.P. PUBLICATIONS

Aircraft Design Memoranda

No. 356 - Lubricants for aeroplane parts
No. 500/35 - Standardisation of air pressure for high pressure pneumatic systems

Standardisation Design Memoranda

No. 28 - Lubricating nipples
No. 57 - Grease guns for aircraft maintenance
No. 59 - Pressure regulating valves for aircraft pneumatic systems
No. 60 - Oil water traps for aircraft pneumatic systems
No. 67 - Low pressure pneumatic air supply units

Airworthiness Technical Notes

No. 120 - The design of control systems for efficient operation at low temperatures
No. 134 - Maintenance of landing gear

CHAPTER 804

REPAIRS

Note.- The subject matter in this Chapter was previously contained in Chapter 4, with the exception of paras. 3 to 7 which are new requirements (Res/Pubs/388).

FS/80

CONTENTS

	Para.
Strength	1
Material	2
Method -	
Welding	4
Attachment -	5
Riveting	6
Glued joints	8
Repair components	9
Control surfaces	10

Amended by A.L.No.13

CHAPTER 804

REPAIRS

+ Strength

1. Repairs are to comply with all relevant design requirements for the aeroplane as a whole. The design of the repairs is, in general, to be such that the reserve factor of the repaired member is not lower than 1.2 or that of the undamaged member, whichever is the less. It is, however, undesirable to repair one member in such a manner that its strength is relatively much below that of the surrounding structure. If the application of a particular repair would considerably reduce the reserve factor of the member, care must be taken to ensure that a combination of two or more repairs could not reduce the reserve factor below the safe limit. Alternatively, a warning must be included drawing attention to, and prohibiting the application of, the dangerous combination. If compliance with these requirements is difficult to attain, the matter is to be referred to S.M.E. Department, R.A.E.

Material

2. Standard materials and methods of repair are to be employed wherever possible.

3. Repairs should be designed so that drawn or folded sections and extruded sections employed in the aeroplane structure can be utilised for repair work. The design of repairs which necessitate the use of special sections must be submitted to D.R.M. for prior approval.

Method

4. Welding.- All repairs are to be designed with a view to their being done by Service personnel and, as far as possible, without the necessity for dismantling the surrounding structure. Except for major repairs, therefore, welding as a repair method should not be employed, since this usually involves considerable dismantling of surrounding parts and also supporting of the structure, to relieve the member under repair from any load. See also Chapter 405.

Attachment

5. For the attachment of patches and sleeve to tubes and built-up members, screwed rods and nipples should be employed where possible. This method is the easiest to apply in confined spaces and needs the minimum number of tools and stock of repair materials.

+ Previously A.D.M.257.

AP 970 Design Requirements for Aeroplanes AL25-37-19460801-OCR.pdf Page 364

Attachment (cont'd)

6. Riveting.- Riveting as a repair method may be used provided that easy access is available for the operation. Except for major repairs of structurally important members, rivets of material which does not require normalising before use, should be employed as far as possible irrespective of the type of rivet used in the original construction.

7. Proprietary types of rivet which can be clenched without access to both sides of the plate, may be used for repair work where the use of solid rivets would be different or impossible. The type of rivets used should be the same as that adopted in the original construction of the aeroplane.

8. Glued joints.- Special consideration should be given to the design of glued joints authorised in repair instructions for structurally important members. Such joints will usually be made in situ where accessibility may be difficult and conditions unfavourable. These joints, therefore will usually need to be of stronger design than those in the original construction and adequate re-inforcing blocks will be required. Splices should not be adopted for the insertion of new lengths of members for repair unless it is possible to ensure adequate clamping along the complete length of the joint. See also Chapter 405.

9. Repair components.- Repair components shall be designed to act as jigs for drilling and other operations on the members to be repaired.

Control surfaces

10. In the design of control surfaces allowance shall be made for the effect of repairs on the mass-balance by providing means of adjusting the mass-balance weights. For this purpose it shall be assumed that repairs may be required up to one third of the total number of ribs and, in addition, that up to two trailing edge insertions may be made, or four patches added. Provision for more extensive repair is desirable if it can be given. It shall also be assumed that these repairs will be so placed as to have the most adverse effect on mass-balance. For fabric-covered components the extra weight due to patching the fabric shall be included.

11. For mass-balanced components the repair shall be designed so as to involve as little increase in weight as possible. After a control surface has been repaired it is only necessary to restore its centre of gravity to the original fore and aft position, irrespective of the design requirements for the mass balancing of the controls. Full particulars of the corrections to be made shall be given in the "Instructions for Repairs."

+ Previously Chapter 500.

RELEVANT M.A.P. PUBLICATIONS

Aircraft Design Memoranda

No. 251 - Repair notes for experimental aircraft.
No. 257 - Repair scheme for aeroplanes.
No. 353 - Preparation of Vols. I of Air Publications for aeroplanes.

FS/39

CHAPTER 805

REPLACEMENT OF COMPONENTS

Note.- The subject matter in this Chapter was previously contained in D.T.D. Specification 1028 and A.D.M. 459, with the exceptions of paras. 4(ii), 5 and 11 which are new requirements (Res/Pub/388).

A

CONTENTS

	Para.
Dismantling and erection	1
Interchangeability -	
Components	2
Plating	3
Transport joints	4
Engine Installation	10
Pipe lines	11
Instruments	14
Fuselage end bays	15
Control cables or rods	16

CHAPTER 805

REPLACEMENT OF COMPONENTS

Dismantling and erection

1. The construction of component parts of the aeroplane shall be such as to permit them being rapidly dismantled and erected by service units. Any equipment for this purpose other than standard service items, shall be supplied for use with the aeroplane.

Interchangeability

2. Components.- Component interchangeability is not a requirement on prototype aeroplanes but the provision of complete interchangeability must be considered in the design of such aeroplanes.

3. Plating.- For major joints in skin plating every endeavour shall be made to provide some degree of interchangeability by the incorporation of screws, dimpled recessing of plates, self locking float nuts or other devices.

Transport joints

+ 4. Transport joints are defined as those joints in the structure where the component is divided for the purpose of complying with the limiting dimensions for aeroplanes specified in Chapter 802.

5. The purpose of these requirements is to -

(i) Save time in dismantling and re-assembling for transportation.

(ii) Enable the repair of components to be dispersed to small work shops.

(iii) Maintain aeroplane serviceability by the easy interchange of components within units.

6. It is essential that all transport joints should be readily detachable and fully interchangeable in the finished state. This means that it should be possible for two mating and undamaged salvagedcomponents to be fitted together easily by

+ Previously A.D.M.509.

AP 970 Design Requirements for Aeroplanes AL25-37 19460801 CCR.pdf

the use of bolts or screws only, without any riveting, reaming or drilling being necessary. On fabric covered components, a small amount of fabricing and doping is acceptable.

7. On a monocoque fuselage, experience has indicated that the above requirement can best be implemented by the use of longitudinal bolts just inside the skin and passing through a stiff frame at the end of each section of the fuselage. This method has the advantage of being easily referenced and made.

8. The use of radial bolts in shear through lap bands in the skin is not prohibited, provided that the ends of the components are sufficiently stiff and careful attention is paid to jigging.

9. Pipelines, controls and electrical connections should have their joints grouped together where the structure is divided for the purpose of meeting the transport requirements.

Engine installation

10. The engine installation shall be in power plant form in accordance with the requirements of Chapter 701.

Pipe lines

11. Attention shall be given to the provision of easy means of replacement of pipe lines, capillaries and controls from the cockpit to the engine bay(s). This is particularly important for the replacement of defective instruments such as pressure gauges employing capillary pipe lines.

12. To facilitate replacement, all pipe lines and controls from the engine(s) to the cockpit shall, so far as possible, be grouped in one duct which is to be fitted with cover plates giving easy access to the interior. Pipe lines shall be fitted separately in a neat manner in the duct.

13. Joints in pipe lines and controls in this duct should be grouped as far as possible, and the arrangement of the items should enable access to any individual control or pipe line.

Instruments

14. Access to the back of the instrument panel shall be easy to facilitate removal and installation of the instruments.

Fuselage end bay

15. Irrespective of whether it is necessary, for the purpose of meeting limiting dimensions, to incorporate a transport joint at the fuselage end bay (i.e. immediately ahead of the tail wheel), a joint complying with the requirements of paras.4 to 9 inclusive is essential on all types of aeroplanes with tail wheel units.

Control cables or rods

16. Cables must be so arranged that they are easy to adjust and to replace. Turnbuckles, other adjustment points, fairleads and other points in a system which might cause difficulty when replacing a cable, should be placed in positions where they are readily visible and accessible, an inspection panel being fitted if necessary. Where a cable passes round a pulley, joints may be inserted in the run of the cable to facilitate replacement of that portion which travels round the pulley.

17. Assembly of a control system with reversed connections must be rendered mechanically impossible.

18. The requirement of para.17 must be complied with on,-

(i) all main flying controls, and

(ii) all secondary controls (including engine controls),

the incorrect operation of which would be liable to cause an accident.

D

CHAPTER 806

INTERCHANGEABILITY

Note.- The subject matter in this Chapter was previously contained in Specification No.D.T.D.1019.

A

CHAPTER 806

INTERCHANGEABILITY

Introduction

1. This chapter governs interchangeability requirements for production aeroplanes and their accessories. On prototype aeroplanes interchangeability is not a requirement but the provision of complete interchangeability shall receive full consideration in the design of such aeroplanes.

2. Corresponding requirements for engines and engine driven accessories are given in Specification No.D.T.D.2024.

Basic requirement

3. All parts and components of airframes, accessories and spares shall be designed and manufactured so as to ensure strict dimensional and functional interchangeability and so that any part may be replaced by a stock part without alteration to the latter being necessary unless subsequent authorised modification action has affected the part in question.

Limits

4. For convenience in the provisioning of equipment for inspection and service use the B.S.I. or Newall standards of limits should be used. When individual firm's special fits are quoted on drawings a full explanation shall accompany them.

5. Limits shall be clearly stated on the drawings for all dimensions affecting assembly or functioning of the parts.

Jigs, templates, and gauges

6. In the construction of all parts the Contractor shall provide and use such jigs, templates and gauges as are necessary to meet the interchangeability requirements, and shall maintain them so that the approved initial standard is not deviated from during their period of use. When A.I.D. jig references or component acceptance gauges are provided, facilities for their use shall be given by the Contractor when the Inspector-in-Charge, A.I.D. so requests.

Dimensioning of drawings

7. In dimensioning the drawings of parts the individual dimensions shall be given from a chosen datum point or line and rectangular co-ordinate dimensions shall be employed. It is preferable to choose the datum point or line on the actual part to assist inspection, since an external datum necessitates a special set up.

Data sheets

8. With each new type of aeroplane interchangeability data sheets shall be prepared and included in the D.I.S.

RELEVANT M.A.P. PUBLICATIONS

Specifications

D.T.D.2024 - Interchangeability requirements for engines and accessories.

F.S.36

These sheets shall show the minimum clearance for final covering, and also tolerances upon dimensions and attachment points of all components which will be held as spare parts. The minimum allowable clearances which will ensure that no part of a moveable component will foul any adjacent component, shall also be shown.

9. Where components are further sub-divided, as is the case in large aeroplanes, the above conditions shall also apply at the sub-divisions.

10. If shims and bushes are employed at rigid attachments, details shall be given on the data sheets.

Attachment of main components

11. On main components, when rigid attachments necessitating fitted joints are essential, removable parts (e.g. shims and bushes) shall be provided to ensure that no alteration to the main component is necessary to obtain the fit required.

Hinges

12. Datum.- In an arrangement of hinges one hinge shall be indicated on the drawings as a datum from the centre line of which all other hinges are dimensioned. This datum hinge may be an end hinge if centres are up to 7'6" but if centres are larger than this a hinge as nearly central as possible shall be used.

13. Minimum clearances.- Sufficient clearance shall be provided between male and female hinges (other than the datum hinge) to allow for the assembling of each pair in all positions possible, taking adverse limits into consideration.

14. The datum hinge shall have as small a clearance as possible for location purposes and where freedom of end movement is permissible the minimum clearance of para.13 need not be provided on this hinge if the limits on the locating dimension are sufficient to cover the full end movement possible under the limits governing the remaining hinges. There must be no danger of fouling other parts of the structure, or of exceeding the minimum clearances allowed between two covered components which are hinged together.

Piano hinges

15. Piano hinges shall not be separated but shall be attached to one component only, leaving one half to be attached to the mating part on assembly. The drawings shall indicate to which part the hinge shall be attached and also convenient bolt holes which shall be used as datum points for assembly.

Cowlings

16. Any suitable method which has received the prior concurrence of the Inspector-in-Charge, A.I.D. may be employed

AP 970 Design Requirements for Aeroplanes AL25-37 19460801 OCR.pdf

to obtain interchangeability of cowlings, panels etc. but consideration should be given during the early stages of design to ensure that the pick up point on the aeroplane and the pick up point on the removable part, are adequately jigged.

Cooling characteristics

17. Particular attention shall be paid to the jigging arrangements for cowling rings and air scoops or ducts which may affect the cooling characteristics of the engine.

Aerodynamic characteristics

18. Care shall be taken to minimise variations in the contour of any component when change in the aerodynamic characteristics of that component will affect the performance of the aeroplane.

19. Critical positioning.- When the position of one component relative to another is critical (e.g. aileron and shroud) the shape and the positional dimensions of the adjacent surfaces shall be closely specified and tolerances indicated. The jigging and interchangeability arrangements, and the riveting technique shall be designed to minimise both the risk of departures from the dimensions and the warping or distortion of such components in manufacture.

20. Ailerons.- The measures taken to obtain compliance with paras.18 and 19 should be such as to avoid the necessity for adjustable hinges on ailerons and on all ailerons it shall be impossible to vary the position of the hinge along the aileron chord.

PART 9

FLIGHT TESTS—HANDLING

(8123) T14097/2692 500 1/44 M46506 U & P 752

PART 9

Flight Tests - Handling

CONTENTS

Chapter 900	General handling flight test requirements
Chapter 901	Ground handling - landplanes
Chapter 902	Water handling - seaplanes
Chapter 903	Take-off and initial climb - landplanes
Chapter 904	Take-off and initial climb - seaplanes
Chapter 905	Approach and landing - landplanes
Chapter 906	Approach and landing - seaplanes
Chapter 907	Flight at and near the stall
Chapter 908	High speed flight
Chapter 909	Aerobatic manoeuvres
Chapter 910	Spinning
Chapter 911	Flight under asymmetric power
Chapter 912	Lateral and directional trim, stability and control
Chapter 913	Longitudinal trim, stability and control
Chapter 914	Qualitative handling

CHAPTER 900

GENERAL HANDLING FLIGHT TEST REQUIREMENTS

Note.- The subject matter of this chapter, as issued with A.L.No.37, incorporates material from J.A.C.Papers Nos.297 and 311. A

CHAPTER 900

GENERAL HANDLING FLIGHT TEST REQUIREMENTS

1. Introduction

1.1 This Part states those tests which shall be made to demonstrate that the aeroplane can be controlled satisfactorily and is adequately stable in the air, and on the ground or the water, or both, as appropriate.

1.2 Each chapter of this Part contains tests of the aeroplane under a specific flight condition and is arranged in accordance with a standard layout, the paragraphs being grouped under headings in the following sequence, - Object; Relevant design requirements; Applicability; Equipment; Loading; General test conditions; Tests; Notes.

2. Relevant design requirements

2.1 Each chapter of this Part repeats for the convenience of flight test personnel the design requirements associated with the flight tests of that chapter. Such requirements are repeated for information only; for design purposes the full requirements must be consulted.

3. Applicability

3.1 The types of aeroplane on which the tests shall be made are stated in each chapter.

3.2 The tests shall be made in full on the prototype. The tests of each chapter shall be repeated on the first production aeroplane, except that, when more than one loading condition for each test is stipulated, only that at which the behaviour of the prototype was least satisfactory need be used. When modifications liable to affect the aerodynamic characteristics of the aeroplane are incorporated, the first aeroplane so modified shall be considered as a first production aeroplane, but tests shall be made, in addition, to ascertain whether the modification is likely to produce more adverse effects at other loadings.

4. Equipment

4.1 Instrumentation

4.1.1 All normal flying and engine instruments shall be fitted for the tests of this Part. In addition, particular tests require special instruments, and these are detailed in the appropriate chapters. Obtaining, fitting and calibrating all instruments shall be the Contractor's responsibility.

Equipment (cont'd)

4.1.2 An automatic observer capable of making either isolated observations or a continuous record shall be fitted for certain tests. Each chapter contains details of the observations the automatic observer is required to record during the tests of that chapter. When, however, a Contractor considers that visual observation of the instruments during certain tests will be more advantageous then the matter shall be discussed with P.D.T.D.

4.2 Miscellaneous equipment

4.2.1 A leading edge type pitot-static head and a tail parachute are required in certain cases.

4.2.2 All external equipment likely to affect the aerodynamic characteristics of the aeroplane shall be either fitted or fully represented by a mock-up.

4.2.3 In the interests of safety such of the following equipment as is specified for the aeroplane type shall be fitted during tests,

(i) above the cloud layer,

(a) R/T and W/T installations
(b) navigational facilities,

(ii) above 15,000 ft.

(a) oxygen equipment
(b) cabin and crew heating equipment.

5. Loading

5.1 The required loadings are stated in each chapter and are given either in full or as one of the following standard loadings,-

W .... the light loading .... all disposable load removed, except enough fuel and oil to operate the aeroplane at sea level for half an hour at a speed of $1.3\ V_{i\ mp}$ (see para. 6.2 below).

X .... the full service loading .... the maximum weight with full operational equipment and the furthest aft c.g. position obtainable at this weight.

Y .... the forward loading .... that practical loading giving the furthest forward c.g. position and the greatest weight obtainable at this c.g. position.

B

Z .... the aft loading .... that practical loading giving the furthest aft c.g. position and the greatest weight obtainable at this c.g. position.

When more than one operational role is specified the most adverse of the above standard loadings shall be used.

5.2 Since the above loading conditions represent limiting cases it is important that each test, and each part of each test, be made at the loading condition specified. Due allowance may be made for fuel consumed while the aeroplane is climbing to the test altitude but if subsequent consumption of fuel causes a material change in c.g. position provision shall be made to enable the load carried to be redistributed to compensate for this.

5.3 The weight and c.g. position at which each test was made shall be reported. The c.g. position shall be specified by its co-ordinates relative to each of two sets of rectangular axes, defined as follows,-

(i) the datum line and a line through the datum point (the origin) normal to the datum line, and in a plane parallel to the plane of symmetry, the co-ordinates being expressed in inches, and

(ii) the standard mean chord and a line through its leading edge (the origin) and normal to the standard mean chord, and in the plane of symmetry, the co-ordinates being expressed as percentages of the length of the standard mean chord.

In each case the positive directions shall be aft of and upward from the origin.

6. General test conditions

6.1 The conditions at which the tests shall be made are specified in each chapter. For greater clarity and convenience test conditions common to a number of tests of a particular chapter have been combined under a separate heading. The test report shall contain a full description of the conditions of each test.

6.2 Throughout this Part the following symbols are used,-

Vs_1 ... knots. ... stalling speed of the aeroplane with flaps and alighting gear down and engine(s) throttled,

Vs_2 .... knots. ... stalling speed of the aeroplane with flaps and alighting gear up and engine(s) throttled, and

$V_{i\ mp}$ ... knots. ... speed for minimum drag power in level flight (see Report AAEE/Res/170).

For the purpose of the tests of this Part, estimated values of the above speeds may be used.

7. Tests

7.1 All the tests applicable shall be made to the satisfaction of the P.D.T.D. by the Contractor before the aeroplane is submitted for flight tests at an Experimental Establishment unless written instructions to the contrary are received.

7.2 Before the aeroplane is submitted for flight tests at an Experimental Establishment the Contractor shall certify that the aeroplane is safe to be flown by authorised Service pilots.

7.3 The Contractor shall, in respect of each test, supply to the R.T.O. six copies of the Test Report together with copies of any graphs obtained from recording instruments and reports of any preliminary tests. A test shall not be deemed to have been completed until such reports have been received by the R.T.O.

7.4 In addition to including the observations specifically asked for in each chapter, the Test Report shall also give details of any undesirable or noteworthy features which have been observed during the course of the tests.

7.5 In many cases it will be necessary in the interests of safety to make preliminary tests at less severe conditions than those prescribed in the following chapters. This is a matter for the discretion of the Contractor and consequently no reference to preliminary tests is made in this Part.

C

CHAPTER 901

GROUND HANDLING - LANDPLANES

Note.- The subject matter of this chapter, as issued with A.L.No.37, incorporates material from J.A.C.Paper No.297.

A

CHAPTER 901

GROUND HANDLING - LANDPLANES

1. Object

1.1 The object of the tests of this chapter is to demonstrate that the aeroplane can be satisfactorily controlled by the pilot when running up the engine(s) and when taxying in winds of various strengths.

2. Relevant design requirements

2.1 Associated design requirements are repeated here for the convenience of flight test personnel. For design purposes the full requirements must be consulted.

2.1.1 The following requirements are extracted from Chapter 301, the paragraph numbering of the original being maintained.

"2.2 The alighting gear design shall be such that, "with brakes applied and wheels unchocked, the "aeroplane does not nose over when any one engine is "run up to maximum continuous power."

"2.3 The aeroplane shall be capable of taxying "satisfactorily in any direction in winds of speeds "up to 0.4 of the stalling speed with flaps down or "20 knots whichever is the greater."

"5.1 Nose wheel units and tail wheel units shall be "capable of castoring in turns of small radius..... "

"6.1 Oscillations about the castoring axis (known "as "shimmy") shall be suppressed ..... "

3. Applicability

3.1 These tests shall be made on all landplanes, unless otherwise specified.

4. Equipment

4.1 No special equipment is required for these tests.

5. Loading

5.1 The shimmy tests of para.7.5 shall be made at that loading which produces the greatest static reaction on level ground at the tail wheel or nose wheel with,-

(i) the weight not exceeding the maximum permissible landing weight, and

(ii) the weight not exceeding the maximum permissible take-off weight.

5.2 The remaining tests shall be made at the forward loading Y for tail wheel type aeroplanes and at the aft loading Z for nose wheel type aeroplanes.

6. General test conditions

6.1 Ground surface

6.1.1 The running up tests of para.7.1 shall be made on any level surface. The remaining tests shall be made on a dry rough runway.

7. Tests

7.1 Running up against chocks

7.1.1 On tail wheel type aeroplanes only, the wheels shall be chocked and, with each engine operating in turn and with the control column held fully back, the power shall be increased until the tail begins to lift off the ground or until take-off power is reached. In the former case the power at which the tail begins to lift shall be noted.

7.2 Running up against the brakes

7.2.1 The wheels shall be unchocked and the parking brakes applied. With each engine operating in turn the power shall be increased until either the wheels slip or until maximum continuous power is reached. Any tendency of the brakes to slip, or, in the case of tail wheel type aeroplanes, of the aeroplane to nose over shall be noted.

7.3 Taxying

7.3.1 With the tail or nose wheel held on the ground, the aeroplane shall be taxied in a straight path. Tests shall be made throughout a range of wind components at right angles to the direction of motion up to 0.4 V_{S_1} or 20 knots, whichever is the greater. If a tail wheel castoring lock is provided this test may be made with the lock engaged.

7.4 Castoring

7.4.1 The aeroplane shall be taxied through 360° in a turn of small radius.+ A ground observer shall observe whether the tail wheel or nose wheel castors satisfactorily.

+ It may be found necessary, especially on nose wheel type aeroplanes, to taxy forward slightly before commencing the turn.

AP 970 Design Requirements for Aeroplanes AL25-37 19460801 OCR.pdf Page 005

Tests (cont'd)

7.5 Shimmy

7.5.1 The aeroplane shall be taxied in a straight path up to speed V to demonstrate that tail or nose wheel shimmy does not occur. These tests shall be made at the combinations of loading and speed V of paragraphs 7.5.2 or 7.5.3 as appropriate.

7.5.2 Tail wheel type aeroplanes,-

(i) at the loading of para.5.1(i) with V equal to the stalling speed in the approach condition corresponding to maximum permissible landing weight.

(ii) At the loading of para.5.1(ii) with V equal to 35 m.p.h.

If a castoring lock is provided, test (ii) only shall be made and with the castoring lock disengaged.

7.5.3 Nose wheel type aeroplanes,-

(i) at the loading of para.5.1(i) with V equal to the stalling speed in the approach condition corresponding to maximum permissible landing weight. In addition the maximum braking forces shall be applied to all braked wheels during this test.

(ii) At the loading of para.5.1(ii) with V equal to the stalling speed in the take-off condition corresponding to the maximum permissible take-off weight.

CHAPTER 902

WATER HANDLING - SEAPLANES

Note.- The subject matter of this chapter, as issued with A.L.No.37, incorporates material from J.A.C.Paper No.297. A

CHAPTER 902

WATER HANDLING - SEAPLANES

1. Object

1.1 The object of the tests of this chapter is to demonstrate that the handling characteristics of the aeroplane are satisfactory when launching, beaching and mooring and when taxying on the water.

2. Relevant design requirements

2.1 Associated design requirements are repeated here for the convenience of flight test personnel. For design purposes the full requirements must be consulted.

2.1.1 The following requirements are extracted from Chapter 306, the paragraph numbering of the original being maintained.

"17. Flying boats shall be capable of taxying "satisfactorily in any direction in winds of speeds "up to 0.4 of the stalling speed with flaps down "with a minimum of 20 knots and a maximum of 35 knots. "For float seaplanes the corresponding wind speeds "are 0.3 of the stalling speed, 15 knots and "30 knots."

3. Applicability

3.1 The tests shall be made on all seaplanes, unless otherwise specified.

4. Equipment

4.1 No special equipment is required for these tests.

5. Loading

5.1 The tests of para.7.1 shall be made at the light loading+ W and the forward loading+ Y.

5.2 The tests of para.7.2 shall be made at loading W and at the aft loading Z.

5.3 The tests of para.7.3 shall be made at the maximum permissible weight for beaching.

6. General test conditions

6.1 Sea conditions

6.1.1 The tests of paras.7.1 and 7.2 shall be made both in calm and in rough sea conditions. Rough

+ The light loading W corresponds to the minimum draught and maximum angle of heel. The forward loading Y corresponds, for float seaplanes, to the minimum immersion of water rudders.

sea conditions shall be based on a wave height having a value appropriate to the weight of the aeroplane, in a linear variation of from 3 ft. for weights of 10,000 lb. and below, to 6 ft. for weights of 120,000 lb. and above.

7. Tests

7.1 Water handling

7.1.1 Satisfactory lateral stability and directional control shall be demonstrated when taxying,-

(i) in rough sea conditions as defined in para. 6.1, and

(ii) in moderate sea conditions, in winds of 0.4 Vs_1 for flying boats with a minimum of 20 knots and a maximum of 35 knots, or 0.3 Vs_1 for float seaplanes with a minimum of 15 knots and a maximum of 30 knots. Taxying shall be done across wind and shall include turns up and down wind.

7.1.2 The following shall be reported,-

(i) the manoeuvrability,

(ii) the liability to porpoise, swing etc.,

(iii) the cleanness of running, with special reference to the amount of spray over flaps, tail, windscreen and propellers,

(iv) the adequacy of auxiliary floats, and

(v) the ability to taxy across wind and turn into and out of wind, together with the factor limiting this, e.g., effectiveness of controls, spray, or float buoyancy.

7.2 Mooring

7.2.1 Mooring tests shall be made over a range of wind conditions and the following shall be reported,-

(i) the suitability of drogues or other means of reducing forward speed, and

(ii) the ease of picking up and casting off moorings.

7.3 Launching and beaching

7.3.1 A report shall be rendered on the ease of handling when launching and beaching, with special reference to the suitability of the beaching gear. B

CHAPTER 903

TAKE-OFF AND INITIAL CLIMB - LANDPLANES

Note.- The subject matter of this chapter, as issued with A.L.No.37, incorporates material from J.A.C.Papers Nos.297 and 311.

A

CHAPTER 903

TAKE-OFF AND INITIAL CLIMB - LANDPLANES

1. Object

1.1 The object of the tests of this chapter is to demonstrate that there is adequate control during the take-off and initial climb.

2. Relevant design requirements

2.1 Associated design requirements are repeated here for the convenience of flight test personnel. For design purposes the full requirements must be consulted.

2.1.1 The following requirements are extracted from Chapter 601, the paragraph numbering of the original being maintained.

"2.1 Elevator control

" 2.1.1 With the aeroplane trimmed for take-off, "flaps in the take-off position, and alighting gear "down, the elevator control force shall be less than "35 lb. for a stick control, or 50 lb. for a wheel "control, throughout the take-off when,-

(i) on tail wheel type aeroplanes, the tail wheel is held on the ground at speeds up to 0.25 Vs_1 and the tail is raised before a speed of 0.85 Vs_1 is reached, or

(ii) on nose wheel type aeroplanes, the nose is raised before a speed of 0.85 Vs_1 is reached."

"2.2 Rudder control

" 2.2.1 With the aeroplane trimmed for take-off " all engines developing full take-off power, and with "the wind on the more adverse side and having a "component at right angles to the take-off run equal "to 0.2 Vs_1 or 10 knots, whichever is the greater, "the rudder control force to maintain a straight path "during the take-off shall be less than 100 lb..... "Differential throttle opening may be employed on "multi-engined aeroplanes during the early part of the "take-off run but all throttles shall be fully open "(subject to any engine operational limitation) before "attaining a speed equal to 50% of the take-off "speed."

"2.4 Retraction of alighting gear and flaps

" 2.4.1 The changes of trim on retraction "separately of the alighting gear and of the flaps

"shall be such that each can be controlled by the "pilot with one hand. For alighting gear retraction "it shall be such that, with the aeroplane trimmed "for take-off, the elevator control force is less than "35 lb. for a stick control or 50 lb. for a wheel "control, when the retraction is commenced immediately "the aeroplane becomes airborne."

3. Applicability

3.1 The tests shall be made on all landplanes.

4. Equipment

4.1 Visual instrument

4.1.1 The following visual instrument shall be fitted,-

(i) low reading airspeed indicator.

4.2 Automatic observer

4.2.1 An automatic observer shall be fitted capable of making a continuous record of the following,-

(i) airspeed

(ii) elevator control force, and

(iii) rudder control force.

5. Loading

5.1 The tests of paras.7.1 to 7.3 inclusive shall be made at the full service loading X, the forward loading Y, and the aft loading Z.

5.2 The test of para.7.4 shall be made at any one of the loadings of para.5.1.

6. General test conditions

6.1 Engine cooling devices

6.1.1 The tests shall be made with the engine cooling devices set at each of those two positions which the Contractor specifies as giving, throughout the take-off and initial climb, adequate engine cooling under the extremes of the atmospheric conditions specified for the aeroplane.

6.2 Flaps

6.2.1 During the tests the flaps should be in that position defined by the Contractor as the "take-off

AP 970 Design Requirements for Aeroplanes AL25-37 19460801 OCR.pdf

General test conditions (cont'd)

position". When it is advisable for the tests to be made with a flap position other than this the reasons for so doing shall be reported.

6.3 Tail wheel castoring lock

6.3.1 If a tail wheel castoring lock is fitted, this should be engaged during the tests.

7. Tests

7.1 General

7.1.1 A sufficient number of take-offs shall be made to enable a report to be rendered on the features listed below. The aeroplane shall be taken off on a straight path and the initial climb continued at take-off power until re-trimming after the alighting gear and flaps have been retracted. Take-offs should be made into winds covering a range of speeds up to 20 knots.

(i) Stability and control,

(ii) the effects on the take-off of changes of trimmer settings,

(iii) in the case of multi-engined aeroplanes, whether, at the commencement of the take-off run, the throttles can be opened up in unison, rapidly and fully, or whether differential opening is necessary,

(iv) any tendency to swing during the ground run and initial climb and the ease with which this can be corrected,

(v) the ease of attaining the required attitude for take-off,

(vi) the indicated airspeed at take-off,

(vii) any tendency for a wing to drop during the initial climb,

(viii) the changes of trim during the retraction of the flaps, and

(ix) the effects of having cockpit hoods open.

Tests (cont'd)

7.2 Elevator control

7.2.1 Trimmed for take-off+, the aeroplane shall be taken off on a straight path. The tail wheel or nose wheel shall be kept on the ground until a speed of 0.25 Vs_1 is reached, and shall be raised before a speed of 0.85 Vs_1 is reached. A continuous record of airspeed and elevator control force shall be made throughout the take-off.

7.3 Rudder control

7.3.1 Trimmed for take-off,+ the aeroplane shall be taken off on a straight path throughout a range of wind components at right angles to the take-off path, on the more adverse side,ø from zero to 0.2 Vs_1 or 10 knots, whichever is the greater. A continuous record of airspeed and rudder control force shall be made throughout these take-offs and the amount of differential throttle opening which may be required shall be noted.

7.3.2 Further tests should be made at higher cross wind components, within the limitations of structural safety, to estimate the maximum cross wind component at which the aeroplane can be satisfactorily controlled during take-off.

7.4 Retraction of alighting gear

7.4.1 Trimmed for take-off,+ the aeroplane shall be taken off and alighting gear retraction commenced immediately the aeroplane becomes airborne. A continuous record of elevator control force shall be made throughout the retraction.

+ The trimmer setting for take-off will be specified by the Contractor.

ø The wind blowing from the side to which the aeroplane tends to swing, when taking off directly into wind has the more adverse effect.

C

CHAPTER 904

TAKE-OFF AND INITIAL CLIMB - SEAPLANES

Note.- The subject matter of this chapter, as issued with A.L.No.37, incorporates material from J.A.C.Paper No.297.

A

CHAPTER 904

TAKE-OFF AND INITIAL CLIMB - SEAPLANES

1. Object

1.1 The object of the tests of this chapter is to demonstrate that there is adequate control and stability during the take-off and initial climb.

2. Relevant design requirements

2.1 Associated design requirements are repeated here for the convenience of flight test personnel. For design purposes the full requirements must be consulted.

2.1.1 The following requirements are extracted from Chapter 601, the paragraph numbering of the original being maintained.

"2.1 Elevator control

" 2.1.1 With the aeroplane trimmed for take-off, "flaps in the take-off position, and alighting gear "down, the elevator control force shall be less than "35 lb. for a stick control, or 50 lb. for a wheel "control, throughout the take-off when,-

.....

(iii) on seaplanes, a normal technique is adopted."

"2.2 Rudder control

" 2.2.1 With the aeroplane trimmed for take-off, "all engines developing full take-off power, and with "the wind on the more adverse side and having a "component at right angles to the take-off run equal "to 0.2 Vs_1 or 10 knots, whichever is the greater, the "rudder control force to maintain a straight path "during the take-off shall be less than 100 lb. For "float seaplanes having a design take-off weight of "less than 15,000 lb. the wind component may be "reduced to the greater of 0.15 Vs_1 or 7 knots. "Differential throttle opening may be employed on "multi-engined aeroplanes during the early part of the "take-off run, but all throttles shall be fully open "(subject to any engine operational limitation) before "attaining a speed of.....60% of the take-off speed."

"2.3 Longitudinal stability on the water

" 2.3.1 It shall be possible without undue "piloting skill for a seaplane to take-off without "porpoising or bouncing."

"2.4 Retraction of alighting gear and flaps

" 2.4.1 The change of trim on retraction "separately of the alighting gear and of the flaps "shall be such that each can be controlled by the "pilot with one hand. For alighting gear retraction "it shall be such that, with the aeroplane trimmed for "take-off, the elevator control force is less than "35 lb. for a stick control, or 50 lb. for a wheel "control, when the retraction is commenced immediately "the aeroplane becomes airborne."

3. Applicability

3.1 These tests shall be made on all types of seaplanes.

4. Equipment

4.1 Visual instrument

4.1.1 The following visual instrument shall be fitted,-

(i) low reading airspeed indicator.

4.2 Automatic observer

4.2.1 An automatic observer shall be fitted capable of making a continuous record of the following,-

(i) airspeed,

(ii) elevator control force, and

(iii) rudder control force.

5. Loading

5.1 The tests of paras.7.1 to 7.3 inclusive shall be made at the full service loading X, the forward loading Y and the aft loading Z.

5.2 The tests of para.7.4 shall be made at any one of the loadings of para.5.1.

6. General test conditions

6.1 Engine cooling devices

6.1.1 The tests shall be made with the engine cooling devices set at each of those two positions which the Contractor specifies as giving, throughout the take-off and initial climb, adequate engine cooling under the extremes of the atmospheric conditions specified for the aeroplane. B

General test conditions (cont'd)

6.2 Flaps

6.2.1 During the tests the flaps should be in that position defined by the Contractor as the "take-off position". When it is advisable for the tests to be made with a flap position other than this the reasons for so doing shall be reported.

7. Tests

7.1 General

7.1.1 A sufficient number of take-offs shall be made to enable a report to be made on the features listed below. The aeroplane shall be taken off on a straight path and the initial climb continued at take-off power until re-trimming after auxiliary floats and flaps have been retracted. Take-offs should be made into winds covering a range of speeds up to 20 knots.

(i) Control,

(ii) the effects on the take-off of changes of trimmer settings,

(iii) in the case of multi-engined aeroplanes, whether, at the start of the take-off run the throttles can be opened up in unison, rapidly and fully, or whether differential opening is necessary,

(iv) any tendency to porpoise during the take-off or to swing during the take-off and initial climb and the ease with which this can be corrected,

(v) the cleanness of running on the water with special reference to the amount of spray over flaps, tail, windscreen and propellers,

(vi) the ease of attaining the required attitude for take-off,

(vii) the indicated airspeed at take-off,

(viii) any tendency for a wing to drop during the initial climb,

(ix) the changes of trim during the retraction of the flaps, and

(x) the effects of having cockpit hoods open.

Tests (cont'd)

7.2 Elevator control

7.2.1 Trimmed for take-off+, the aeroplane shall be taken off on a straight path in a normal manner. A continuous record of airspeed and elevator control force shall be made throughout the take-off.

7.3 Rudder control

7.3.1 Trimmed for take-off+, the aeroplane shall be taken off on a straight path throughout a range of wind components at right angles to the take-off path, on the more adverse side∅ from zero to $0.2V_{S_1}$ or 10 knots, whichever is the greater. For float seaplanes having a design take-off weight of less than 15,000 lb. the wind component may be restricted to $0.15\ V_{S_1}$ or 7 knots, whichever is the greater. A continuous record of airspeed and rudder control force shall be made throughout these take-offs and the amount of differential throttle opening which may be required shall be noted.

7.3.2 Further tests should be made at higher cross wind components, within the limitations of structural safety, to estimate the maximum cross wind components at which the aeroplane can be satisfactorily controlled during take-off.

7.4 Retraction of auxiliary floats

7.4.1 Trimmed for take-off,+ the aeroplane shall be taken off and retraction commenced immediately the aeroplane becomes airborne. A continuous record of elevator control force shall be made throughout the retraction.

+ The trimmer setting for take-off is that specified by the Contractor.

∅ The wind blowing from the side to which the aeroplane tends to swing when taking-off directly into wind has the more adverse effect.

C

CHAPTER 905

APPROACH AND LANDING - LANDPLANES

Note.- The subject matter of this chapter, as issued with A.L.No.37, incorporates material from J.A.C.Papers Nos.297 and 311.

A

CHAPTER 905

APPROACH AND LANDING - LANDPLANES

1. Object

1.1 The object of the tests of this chapter is to demonstrate that there is adequate control during the approach and landing, and in the event of a baulked landing.

2. Relevant design requirements

2.1 Associated design requirements are repeated here for the convenience of flight test personnel. For design purposes the full requirements must be consulted.

2.1.1 The following requirements are extracted from Chapter 601, the paragraph numbering of the original being maintained.

"3.1 Elevator control

" 3.1.1 With the aeroplane trimmed for the "approach, flaps and alighting gear down, and engine(s) "throttled, the elevator control force shall be less "than 35 lb. for a stick control, or 50 lb. for a "wheel control, in order,-

(i) on tail wheel type aeroplanes, to effect a three-point landing, or

(ii) on nose wheel type aeroplanes, to hold the aeroplane off the ground at a speed of 1.05 Vs_1 and, with the main wheels on the ground, to hold the nose wheel off the ground at a speed of 0.85 Vs_1."

"3.2 Rudder control

" 3.2.1 With the aeroplane trimmed for the "approach, and with the wind on the more adverse side "and having a component at right angles to the "landing path equal to 0.2 Vs_1 or 10 knots, whichever "is the greater, the rudder control force to maintain "a straight path during the landing shall be less "than 100 lb.

"3.3 Lowering of alighting gear and flaps

" 3.3.1 The change of elevator control force due "to the change of trim when either the alighting gear "or the flaps are lowered in level flight at a speed "of 1.5 Vs_1 shall be less than 35 lb. for a stick "control or 50 lb. for a wheel control."

"3.4 Changes of trim during baulked landing

" 3.4.1 The change of elevator control force "due to either,-

(i) opening the engine(s) up to full take-off power and retracting the alighting gear at a speed of 1.2 Vs_1, or

(ii) raising the flaps to the maximum lift position at a speed of 1.2 Vs_1 when the engines are delivering full take-off power,

"shall at no time exceed 35 lb. for a stick control, or "50 lb. for a wheel control. The corresponding changes "of aileron control force shall be less than 10 lb. "for a stick control, or 15 lb. for a wheel control and "of rudder control force shall be less than 100 lb."

2.1.2 The following requirements are extracted from Chapter 205, the paragraph numbering of the original being maintained.

"10. The speed at which flaps come up must be such "that excessive sinking does not occur."

3. Applicability

3.1 The tests shall be made on all landplanes.

4. Equipment

4.1 Visual instrument

4.1.1 The following visual instrument shall be fitted,-

(i) low reading airspeed indicator.

4.2 Automatic observer

4.2.1 An automatic observer shall be fitted capable of making a continuous record of the following,-

(i) airspeed,

(ii) elevator control force,

(iii) aileron control force, and

(iv) rudder control force.

B

5. Loading+

5.1 The tests of paras.7.1 and 7.2 shall be made at the light loading ø W, the maximum permissible landing weight, the forward loading Y and the aft loading Z.

5.2 The tests of para.7.3 shall be made at loadings W and Z.

5.3 The tests of para.7.4 shall be made at any one of the loadings of para.5.1.

5.4 The tests of para.7.5 shall be made at the maximum permissible landing weight, and at loadings Y and Z.

6. General test conditions

6.1 Approach speed

6.1.1 The approach shall be made with engine(s) throttled, flaps and alighting gear down, and at a speed defined as the best approach speed or at 1.3 Vs_1, whichever is the greater.

6.2 Engine cooling devices

6.2.1 The engine cooling devices shall be set at the closed position, unless otherwise specified.

6.3 Tail wheel castoring lock

6.3.1 If a tail wheel castoring lock is fitted, this should be engaged during the tests.

7. Tests

7.1 General

7.1.1 A sufficient number of engine-on and of engine-throttled landings shall be made into winds covering a range of speeds up to 20 knots to enable a report to be rendered on the following features,-

(i) stability and control,

(ii) the effects of having the engine cooling devices / open,

---

+ If the weights at the forward and aft loadings exceed the maximum permissible landing weight, the tests shall be made at the latter weight with the c.g. as near as possible to the forward and aft positions.

ø The light load condition is of particular application to large aeroplanes in order to check any tendency to float when landing in a light condition.

Tests (cont'd)

(iii) the effects of having cockpit hoods open, or of using any permitted landing aids,

(iv) the change of trim on opening or closing the throttle(s) during the approach,

(v) whether there is sufficient trimmer range available to trim out all control forces during the approach,

(vi) whether sufficient drag is available to give a satisfactory rate of descent,

(vii) the effectiveness and sensitiveness of the brakes,

(viii) any tendency to swing during the landing run and the ease with which this can be corrected, and

(ix) any tendency for a tail wheel type aeroplane to nose over or for the tail of a nose wheel type aeroplane to touch the ground.

7.2 Elevator control

7.2.1 Trimmed for the approach, flaps and undercarriage down and engine(s) throttled,-

(i) on tail wheel type aeroplanes, a three point landing shall be made, or

(ii) on nose wheel type aeroplanes, the aeroplane shall be held off at a speed of not more than 1.05 Vs_1 and, after touch down, the nose wheel held off the ground at a speed of 0.85 Vs_1.

A continuous record of airspeed and elevator control force shall be made throughout the landing.

7.3 Rudder control

7.3.1 Trimmed for the approach, landings shall be made on a straight path throughout a range of wind components at right angles to the landing path, on the more adverse+ side from zero to 0.25 Vs_1 or 10 knots, whichever is the greater. A continuous record of airspeed and rudder control force shall be made throughout the landings.

7.3.2 Further tests should be made at higher cross wind components, within the limitations of

+ The wind blowing from the side to which the aeroplane tends to swing when landing into wind has the more adverse effect.

C

Tests (cont'd)

structural safety, to estimate the maximum cross wind component at which the aeroplane can be satisfactorily controlled during landing.

7.4 Lowering of alighting gear and flaps

7.4.1 With the aeroplane initially flying in level flight at a speed of 1.5 Vs_1 the changes of control forces on lowering the alighting gear and flaps separately shall be measured, the airspeed being maintained constant.

7.5 Baulked landing

7.5.1 On an engine-throttled approach, with flaps and alighting gear down, the speed shall be reduced to 1.2 Vs_1. The engine(s) shall then be opened up to full take-off power and the alighting gear retracted. The flaps shall subsequently be raised to the maximum lift position. A continuous record of airspeed, elevator, aileron and rudder control forces shall be made. The following shall be noted,-

(i) stability and control,

(ii) any loss of height after opening up the engine(s),

(iii) any sink on raising the flaps to the maximum lift position, and

(iv) the rate of climb away.

8. Notes

8.1 Sideslipping is permitted in the cross-wind landing tests, but not otherwise.

CHAPTER 906

APPROACH AND LANDING - SEAPLANES

Note.- The subject matter of this chapter, as issued with A.L.No.37, incorporates material from J.A.C.Papers Nos.297 and 311.

A

CHAPTER 906

APPROACH AND LANDING - SEAPLANES

1. Object

1.1 The object of the tests of this chapter is to demonstrate that there is adequate control and stability during the approach and landing, and in the event of a baulked landing.

2. Relevant design requirements

2.1 Associated design requirements are repeated here for the convenience of flight test personnel. For design purposes the full requirements must be consulted.

2.1.1 The following requirements are extracted from Chapter 601, the paragraph numbering of the original being maintained.

"3.1 Elevator control

" 3.1.1 With the aeroplane trimmed for the "approach, flaps and alighting gear down, and engine(s) "throttled, the elevator control force shall be less "than 35 lb. for a stick control, or 50 lb. for a wheel "control in order,

.....

(iii) on seaplanes, to effect a stalled landing"

"3.2 Rudder control

" 3.2.1 With the aeroplane trimmed for the "approach, and with the wind on the more adverse side "and having a component at right angles to the landing "path equal to 0.2 Vs_1 or 10 knots, whichever is the "greater, the rudder control force to maintain a "straight path during the landing shall be less than "100 lb. For float seaplanes having a design take-off "weight less than 15,000 lb. the wind component may "be reduced to the greater of 0.15 Vs_1 or 7 knots."

"3.3 Lowering of alighting gear and flaps

" 3.3.1 The change of elevator control force "due to the change of trim when either the alighting "gear or the flaps are lowered in level flight at a "speed of 1.5 Vs_1 shall be less than 35 lb. for a "stick control or 50 lb. for a wheel control."

"3.4 Changes of trim during baulked landing

" 3.4.1 The change of elevator control force "due to either,-

(i) opening the engine(s) up to full take-off power and retracting the alighting gear at a speed of 1.2 Vs_1, or

(ii) raising the flaps to the maximum lift position at a speed of 1.2 Vs_1 when the engines are delivering full take-off power,

"shall at no time exceed 35 lb. for a stick control, "or 50 lb. for a wheel control. The corresponding "changes of aileron control force shall be less than "10 lb. for a stick control, or 15 lb. for a wheel "control and of rudder control force shall be less "than 100 lb."

"3.5 Longitudinal stability on the water

" 3.5.1 It shall be possible to land a seaplane "over a range of landing speeds from fly-on landings "to stalled landings without undue bouncing or "porpoising during the landing run."

2.1.2 The following requirements are extracted from Chapter 205, the paragraph numbering of the original being maintained.

"10. The speed at which flaps come up must be such "that excessive sinking does not occur."

3. Applicability

3.1 The tests shall be made on all types of seaplanes.

4. Equipment

4.1 Visual instrument

4.1.1 The following visual instrument shall be fitted,-

(i) low reading air speed indicator.

4.2 Automatic observer

4.2.1 An automatic observer shall be fitted capable of making a continuous record of the following,-

(i) airspeed,

(ii) elevator control force,

(iii) aileron control force, and

(iv) rudder control force.

B

5. Loading+

5.1 The tests of para.7.1 and 7.2 shall be made at the light loading ø W, the maximum permissible landing weight, the forward loading Y and the aft loading Z.

5.2 The tests of para.7.3 shall be made at loadings W and Z.

5.3 The tests of para.7.4 shall be made at any one of the loadings of para.5.1.

5.4 The tests of para.7.5 shall be made at the maximum permissible landing weight, and at loadings Y and Z.

6. General test conditions

6.1 Approach speed

6.1.1 The approach shall be made with engine(s) throttled, flaps and auxiliary floats down and at a speed defined as the best approach speed or at 1.3 Vs_1, whichever is the greater.

6.2 Engine cooling devices

6.2.1 The engine cooling devices shall be set at the closed position, unless otherwise specified.

7. Tests

7.1 General

7.1.1 A sufficient number of engine-on and of engine-throttled landings (including normal, stalled and simulated night landings) shall be made over the ranges of practicable landing speeds and attitudes to enable a report to be rendered on the features listed below. Landings should be made into winds covering a range of speeds up to 20 knots.

(i) Control,

(ii) stability, with particular reference to any tendency to porpoise on the water and method of correction,

---

+ If the weights of these loadings exceed the maximum permissible landing weight, the tests shall be made at the latter weight with the c.g. as near as possible to the forward and aft position.

ø The light load condition is of particular application to large aeroplanes in order to check any tendency to float when landing in a light condition.

Tests (cont'd)

(iii) the effects of having the engine cooling devices open,

(iv) the effects of having cockpit hoods open, or of using any permitted landing aids,

(v) the change of trim on opening or closing the throttle(s) during the approach,

(vi) whether there is sufficient trimmer range available to trim out all control forces during the approach,

(vii) whether sufficient drag is available to give a satisfactory rate of descent,

(viii) any tendency to swing during the landing run and the ease with which this can be corrected, and

(ix) the cleanness of running on the water with special attention to the spray thrown over flaps, tail, windscreen and through the propeller.

7.2 Elevator control

7.2.1 Trimmed for the approach, flaps and auxiliary floats down and engine(s) throttled, a stalled landing shall be made into wind. A continuous record of airspeed and elevator control force shall be made throughout the landing.

7.3 Rudder control

7.3.1 Trimmed for the approach, landings shall be made on a straight path throughout a range of wind components at right angles to the landing path, on the more adverse side,+ from zero to 0.2 Vs_1 or 10 knots, whichever is the greater. For float planes having a design take-off weight of less than 15,000 lb. the wind component may be restricted to 0.15 Vs_1 or 7 knots, whichever is the greater. A continuous record of airspeed and rudder control force shall be made throughout the landings.

7.4 Lowering of auxiliary floats and flaps

7.4.1 With the aeroplane initially flying in level flight at a speed of 1.5 Vs_1 the changes of control forces on lowering the floats and flaps shall be measured, the airspeed being maintained constant.

+ The wind blowing from the side to which the aeroplane tends to swing when landing into wind has the more adverse effect.

C

Tests (cont'd)

7.5 Baulked landing

7.5.1 On an engine-throttled approach, with flaps and floats down, the speed shall be reduced to 1.2 V_{S_1}. The engine(s) shall then be opened up to full take-off power and the floats retracted. The flaps shall be subsequently raised to the maximum lift position. A continuous record of airspeed, elevator, aileron and rudder control forces shall be made. The following shall be noted,-

(i) stability and control,

(ii) any loss of height after opening up the engine(s),

(iii) any sink in raising the flaps to the maximum lift position, and

(iv) the rate of climb away.

8. Notes

8.1 Sideslipping is permitted in the cross-wind landing tests, but not otherwise.

CHAPTER 907

FLIGHT AT AND NEAR THE STALL.

Note.- The subject matter of this chapter, as issued with A.L.No.37, incorporates material from J.A.C.Papers Nos.297 and 311.

A

CHAPTER 907

FLIGHT AT AND NEAR THE STALL

1. Object

1.1 The object of the tests of this chapter is to determine the stalling speeds, and to demonstrate that the characteristics of the stall and the control and stability of the aeroplane near the stall are satisfactory.

2. Relevant design requirements

2.1 Associated design requirements are repeated here for the convenience of flight test personnel. For design purposes the full requirements must be consulted.

2.1.1 The following requirements are extracted from Chapter 601, the paragraph numbering of the original being maintained,-

"4.1 There shall be adequate control and stability "down to the stall, and when the stall is approached "from either straight or turning flight there shall "be no violent wing dropping and no tendency to spin "at the stall."

"4.2 It shall be possible to restore unstalled flight "after the stall has occurred without use of engine(s)."

"4.3 There should be some warning before the stall, "such as buffeting or vibration, and, once the "warning is given, it shall be possible to avert the "stall."

3. Applicability

3.1 The tests shall be made on all aeroplanes.

4. Equipment

4.1 No special equipment is required for the tests.

5. Loading

5.1 The tests shall be made at the aft loading Z and repeated at the full service loading X if this loading is appreciably different from Z.

6. General test conditions

6.1 Altitude

6.1.1 The tests shall be made at any safe altitude.

General test conditions (cont'd)

6.2 Configuration and power

6.2.1 The tests of para.7.1 shall be made at the following configurations and engine powers,-

(i) flaps and alighting gear down, engine cooling devices closed, cockpit hood(s) closed, in straight flight,

(a) with the engine(s) throttled, and

(b) over a range of engine powers+ up to that for level flight at this configuration at about 1.2 times the corresponding stalling speed,

(ii) as (i) but with the engine cooling devices ø open,

(iii) as (i), but where appropriate, with the cockpit hood(s) ø open,

(iv) flaps up, alighting gear down, engine cooling devices closed, cockpit hood(s) closed, in straight flight with engine(s) throttled,

(v) flaps and alighting gear up, engine cooling devices closed, cockpit hood(s) closed, in straight flight,

(a) with engine(s) throttled, and

(b) over a range of engine powers+ up to maximum cruising power.

6.2.2 The tests of paras.7.2 shall be made at the configurations and engine powers of paras.6.2.1(v).

6.2.3 The tests of paras.7.3 and 7.4 shall be made at the configurations and engine powers of paras.6.2.1(i) and 6.2.1(v).

7. Tests

7.1 Characteristics of the stall in straight flight and determination of the stalling speed

7.1.1 With all control forces trimmed out, the aeroplane shall be flown at a speed of about 1.4 times

---

+ In most cases the slipstream has adverse effects on the stalling characteristics.

ø The opening of engine cooling devices or cockpit hoods sometimes causes excessive buffeting on control surfaces, or other adverse effects at or near the stall.

B

Tests (cont'd)

the appropriate stalling speed with the throttle(s) set to the required position.+ The control column shall then be pulled slowly backwards so that the speed gradually decreases, the rate of decrease of speed below 1.1 times the stalling speed being less than half a mile per hour per second. Every possible effort should be made to keep the lateral attitude of the aeroplane constant whilst the speed is being reduced, until a condition is reached at which either control is lost by virtue of a wing and/or nose drop or the elevator control comes up against its stop. This shall be taken as the stall and the corresponding speed the stalling speed. The pilot shall report,-

(i) whether there is any warning of the onset of the stall, and its nature,

(ii) how far back the control column has to be pulled and the approximate force required,

(iii) the behaviour of the aeroplane at the stall, especially whether a wing drops suddenly and, if so, whether it can be raised by use of ailerons alone, or whether there is any tendency to spin, and

(iv) the method of recovery from the stall and the height lost during the recovery.

7.1.2 The stall shall be approached as in the test of para.7.1.1. On receiving the stall warning the pilot shall take action to avert the stall. He shall report such action and its effect.

7.1.3 If the above tests have shown that the behaviour of the aeroplane at the stall is not violent, the pilot shall determine the effect of pulling the control column further back after the stall is reached.

7.2 Characteristics of the stall in turning flight

7.2.1 With all control fordes trimmed out the aeroplane shall be flown, wings level, and with the throttles set to the required position+, at a speed of about 1.3 times the expected stalling speed in the turn. It shall then be put into a series of turns at increasing angles of bank up to that angle of bank which corresponds approximately to a normal accelerationϕ in a steady turn equal to 40% of the

---

+ Height may be gained or lost according to the engine condition.

ϕ It may be assumed that the normal acceleration ng in a steady turn at an angle of bank θ is given by $ng = g \sec \theta$

Tests (cont'd)

design normal acceleration. In each turn the angle of bank shall be kept constant and the speed reduced by pulling the control column backwards until the aeroplane stalls. The pilot shall report,-

(i) whether there is any warning of the stall, and its nature,

(ii) how far back the control column has to be pulled and the approximate force required,

(iii) the behaviour of the aeroplane at the stall, especially whether a wing drops suddenly and, if so, whether the angle of bank subsequently exceeds 90°, and

(iv) the method of recovery from the stall and the height lost during the recovery.

7.2.2 The stall shall be approached as in the test of para.7.2.1. On receiving the stall warning the pilot shall take action to avert the stall. He shall report such action and its effect.

7.3 Behaviour near the stall

7.3.1 With all control forces trimmed out the aeroplane shall be flown at a speed of 1.2 times the stalling speed, or as near thereto as the trimming arrangements will permit. The pilot shall report,-

(i) whether the aeroplane will fly steadily and laterally level at constant speed with hands and feet off, or, if not, what controls have to be used and to what extent, and

(ii) the approximate position of all controls and trimmers.

7.3.2 The pilot shall then reduce the speed to 1.1 times the stalling speed trimming out the control forces as far as is possible. He shall,-

(i) report whether the aeroplane will fly steadily and laterally level at constant speed, and

(ii) give an estimate of the amount of control movement and the forces involved.

7.3.3 The pilot shall disturb the aeroplane laterally and directionally from the condition of para.7.3.2, and shall report,-

C

Tests (cont'd)

(i) whether the initial condition can be regained by use of,

(a) both aileron and rudder,

(b) rudder only, the aileron being held fixed, and

(c) aileron only, the rudder being held fixed,

(ii) the amount of control movement and the forces involved in each case.

7.4 Low speed turns

7.4.1 The aeroplane shall be put into turns with 30° of bank. The pilot shall then reduce the speed until a minimum speed is reached at which a steady sustained turn with 30° of bank can be maintained. The turns shall be continued at this minimum speed through at least 180° and recovery made without increasing the speed. The turns shall be made both to the left and to the right. The pilot shall report,-

(i) the minimum speed for sustained turns and the conditions which impose the limit,

(ii) the behaviour of the aeroplane in the turn and during the recovery from the turn,

(iii) whether control remains normal, and

(iv) the approximate position of the control column during the turn.

CHAPTER 908

HIGH SPEED FLIGHT

Note.- The subject matter of this chapter, as issued with A.L.No.37, incorporates material from J.A.C.Paper No.297.

A

CHAPTER 908

HIGH SPEED FLIGHT

1. Object

1.1 The object of the tests of this chapter is to demonstrate the satisfactory behaviour of the aeroplane in high speed flight, including recoveries from dives.

2. Relevant design requirements

2.1 Associated design requirements are repeated here for the convenience of flight test personnel. For design purposes the full requirements must be consulted.

2.1.1 The following requirements are extracted from Chapter 104, the paragraph numbering of the original being maintained.

"2. ..... The design should ensure that the changes "in trim, which must be capable of correction with ease "by the flying controls, due to the following causes "are minimised,-

.....

(vii) Opening and closing of bomb doors.

.....

(ix) Operation of gun turrets.

....."

2.1.2 The following requirements are extracted from Chapter 601, the paragraph numbering of the original being maintained.

"1.2 ..... under all appropriate operating "conditions the aeroplane shall satisfactorily fulfil "its specified roles and shall be controllable and "adequately stable about each axis."

2.1.3 The following requirements are extracted from Chapter 701, the paragraph numbering of the original being maintained.

"2.3 The airframe-engine-propeller combination shall "be such that, throughout the airspeed range for which "the aeroplane is designed, the engine speed will "remain within the limits specified by the "Engine Contractor".

3. Applicability

3.1 The tests shall be made on all aeroplanes.

4. Equipment

4.1 Visual instruments

4.1.1 The following visual instruments shall be fitted,-

(i) maximum reading accelerometer, and

(ii) angle of sideslip indicator.

4.1.2 In addition, for the tests of paras.7.3 and 7.4, when Mach numbers greater than 0.6 are anticipated, there shall also be fitted,-

(iii) Machmeter, and

(iv) dive angle indicator.

4.2 Automatic observer

4.2.1 For the tests of paras.7.3 and 7.4 an automatic observer shall be fitted capable of making a continuous record of the following,-

(i) airspeed,

(ii) altitude,

(iii) normal acceleration,

(iv) elevator control force, and

(v) angle of sideslip.

4.3 Pitot-static head

4.3.1 For the tests of paras.7.3 and 7.4 when Mach numbers greater than 0.6 are anticipated, a leading edge mounted pitot-static head shall be fitted and the static pressure to the airspeed system derived therefrom.

5. Loading

5.1 The tests of paras.7.2.1 and 7.3 shall be made at the forward loading Y and the aft loading Z. They shall be repeated at the full service loading X, unless this approximates closely to loading Z.

5.2 The tests of paras.7.2.3, 7.2.4 and 7.2.5 shall be made at either loading Y or Z, whichever is the more convenient.

B

6. General test conditions

6.1 Altitude

6.1.1 The high Mach number dives of para. 7.3 shall commence at or near the service ceiling of the aeroplane; the remaining tests shall be made at any convenient altitude.

6.2 Speed range

6.2.1 The aeroplane shall be dived to a limiting speed of between 90% and 95% of the design diving speed appropriate to the particular altitude conditions.

6.3 Acceleration range

6.3.1 During recoveries from dives the limiting acceleration shall be 90% of the unfactored design value appropriate to the particular speed and altitude conditions, a tolerance of plus 0g, minus 0.5g on this acceleration being acceptable.

6.4 Air brakes

6.4.1 When air brakes are fitted, they shall be in the closed position except for the tests of paras. 7.2.7.

7. Tests

7.1 General

7.1.1 Each dive shall commence with the aeroplane flying horizontally at the required altitude and at its maximum level speed for that altitude, and with all control forces trimmed out. The throttle(s) shall then be set to the required position and the aeroplane dived steadily.

7.1.2 On high speed aeroplanes it is possible that adverse compressibility effects will occur during the limiting airspeed dives. In such cases the high Mach number dives should be made first in order to determine any Mach number limitation which it may be considered desirable to impose. Such limitation should then be used during the limiting airspeed dives.

7.1.3 If any item of alternative load or external attachment is likely to have an adverse effect on the behaviour of the aeroplane in the dive, sufficient tests shall be made to explore this.

7.1.4 The report submitted shall include details of any buffeting or hunting, changes in control forces or any other features which may arise.

Tests (cont'd)

7.2 Limiting airspeed dives

7.2.1 Dives to the limiting speed shall be made with the throttle(s) set,-

(i) one-third open, and

(ii) fully open (subject to any engine operational limitation).

7.2.2 In each dive the general behaviour of the aeroplane shall be noted together with the maximum engine speed reached during the dive. Any change of trimmer setting made in the dive shall be reported. The limiting acceleration specified in para.6.3 shall be attained during the recovery from at least one of these dives.

7.2.3 A dive shall be made with the throttle(s) set initially fully open. At, or near, the limiting speed the throttle(s) shall be rapidly closed and then re-opened as rapidly as is possible without the propeller overspeeding. The general behaviour of the aeroplane shall be noted.

7.2.4 Dives with the throttle(s) set one-third open shall be made and at, or near, the limiting speed,-

(i) all control trimmers shall be moved through small angles to prove satisfactory operation,+

(ii) a safe angle of sideslip ø shall be applied and any change of longitudinal trim noted, and

(iii) all emergency exits,≠ other than jettisonable ones, shall be tested for satisfactory functioning.

7.2.5 Where applicable, the tests of paras.7.2.1 (i) and 7.2.4(ii) shall be repeated with,-

(i) bomb doors open, bombs in position.

+ It is necessary to test the trimmers during the dive, as the aerodynamic forces on the controls have been observed on occasions to affect the mechanical linkage of the trimmer systems and make the trimmers immovable.

ø The contractor shall specify a safe amount of sideslip from design considerations.

≠ These tests should be restricted to those emergency exits the opening of which will not endanger the aeroplane or crew.

C

Tests (cont'd)

7.2.6 Where applicable, the tests of para.7.2.1(i) shall be repeated with,-

(i) turrets rotating from beam to beam as rapidly as possible, and

(ii) operation of any external movable equipment designed to function at high speed.

7.2.7 On aeroplanes fitted with air brakes, sufficient additional tests shall be made to demonstrate the satisfactory behaviour of the aeroplane when these are used in a manner appropriate to the type.

7.3 Tests at high Mach numbers

7.3.1 The automatic observer shall be operated continuously throughout the dives and recoveries of all the following tests.

7.3.2 The aeroplane shall be dived at full throttle from near its service ceiling. The dive shall be discontinued,-

(i) after diving through 15,000 feet, or

(ii) when the limiting speed is reached, or

(iii) when control or other difficulties are encountered.

This dive shall be repeated at gradually increasing angles of dive in order to determine the Mach number, if any, at which buffeting, control or other difficulties are encountered.

7.3.3 Recoveries shall be made at progressively increasing accelerations up to the limiting acceleration specified in para.6.3 at the highest Mach number attained and also at 95% and 90% of this Mach number. If the limiting acceleration is not achievable during any of these recoveries further recoveries shall be made at progressively decreasing Mach numbers until the limiting acceleration is reached.

7.3.4 When dive recovery safeguards are fitted, the recovery shall be made with such safeguards in operation. Tests shall also be made to determine the recovery characteristics when the safeguards are not in operation.

Tests (cont'd)

7.4 Tests at intermediate combinations of speed and Mach number

7.4.1 When either the limiting airspeed or the high Mach number tests gives adverse effects, sufficient additional tests at intermediate altitudes shall be made to explore these difficulties, as these may become more severe at some intermediate combination of indicated airspeed and Mach number.

D

CHAPTER 909

AEROBATIC MANOEUVRES

Note.- The subject matter of this chapter, as issued with A.L.No.37, incorporates material from J.A.C.Paper No.297.

A

CHAPTER 909

AEROBATIC MANOEUVRES

1. Object

1.1 The object of these tests is to assess the aerobatic characteristics of the aeroplane.

2. Relevant design requirements

2.1 Associated design requirements are repeated here for the convenience of flight test personnel. For design purposes the full requirements must be consulted.

2.1.1 The following requirements are extracted from Chapter 601, the paragraph numbering of the original being maintained.

"5.1 When aerobatic manoeuvres are specified, the "aeroplane shall be capable of executing in a "satisfactory manner the following,-

(i) normal loop,

(ii) slow roll in each direction,

(iii) a brief period of inverted flight,

(iv) half loop followed by slow roll (in each direction),

(v) half a slow roll (in each direction) and dive out,

(vi) stall turn, and

(vii) figures of eight with vertical banked turns."

2.1.2 The following requirements are extracted from Chapter 703, the paragraph numbering of the original being maintained.

"2. Functioning of the system.- The fuel system shall "be designed to ensure satisfactory functioning under "all conditions of acceleration, attitude of aeroplane, "altitude of operation, and with any quantity of fuel "in the tanks. When the Aeroplane Specification calls "for aerobatics, including inverted flying, the fuel "system shall be arranged so that inversion will not "have any adverse effect upon its working when the "aeroplane returns to normal flight, and will not result "in any appreciable loss of fuel."

2.1.3 The following requirements are extracted from Chapter 704, the paragraph numbering of the original being maintained.

"11. Functioning of the system.- The oil system on "all aeroplanes shall be designed to ensure satisfactory "functioning under all conditions of acceleration, "attitude of aeroplane, and altitude of operation and "also to ensure that, with the exception of the "quantity trapped for propeller feathering, the entire "oil content of the tank is available for use."

"12. On all fighters and aerobatic trainers and on "other aeroplanes when aerobatics are called for in "the Aeroplane Specification, the oil system shall be "so arranged that the engine receives an adequate "supply of oil,-

(i) under conditions involving the application of negative "g", for a period of 15 seconds or until the fuel supply to the engine fails, whichever is the longer,

(ii) during recovery from conditions involving the application of negative "g", and

(iii) after recovery from conditions involving the application of negative "g".

"Strict compliance may not be insisted upon throughout "the range 0.1 positive "g" to 0.1 negative "g". The "oil tank shall either, provide effective venting "under conditions of negative "g", or it shall be "strong enough to withstand the pressure consequent on "interference with the venting."

2.1.4 The following requirements are extracted from Chapter 705, the paragraph numbering of the original being maintained.

"1.2 When aerobatic manoeuvres, including inverted "flying, are specified, the coolant system shall be "arranged so that inversion will not have any adverse "effect upon its functioning when the aeroplane "returns to normal flight, and will not result in any "appreciable loss of coolant."

3. Applicability

3.1 The tests shall be made on all aeroplanes for which aerobatic manoeuvres are specified.

4. Equipment

4.1 Automatic observer

4.1.1 An automatic observer shall be fitted capable of making a continuous record of the following,-

AP 970 Design Requirements for Aeroplanes AL25-37 19460801 OCR.pdf Page 756

(i) airspeed,

(ii) normal acceleration, and

(iii) altitude.

5. Loading

5.1 The tests shall be made at the full service loading X appropriate to aerobatic manoeuvres.

6. General test conditions

6.1 Altitude

6.1.1 The tests shall be made at any convenient altitude.

7. Tests

7.1 The following aerobatic manoeuvres shall be made with the automatic observer in operation,-

(i) normal loop,

(ii) slow roll in each direction,

(iii) a brief period of inverted flight,

(iv) half loop followed by a slow roll (in each direction),

(v) half a slow roll (in each direction) and dive out,

(vi) stall turn, and

(vii) figures of eight with vertical banked turns.

7.1.2 It shall be noted whether in making these manoeuvres, there is any loss of fuel, oil, or coolant (where applicable) and that the engine(s) function satisfactorily after resuming a normal attitude of flight. The entry speed for each manoeuvre, the behaviour of the aeroplane and its controls, any tendency for the engine(s) to cut, and any other feature which may affect aerobatics, shall be reported.

CHAPTER 910

SPINNING

Note.- The subject matter of this chapter has been completely revised with A.L.No.37 and incorporates material A from J.A.C.Paper No.297.

CHAPTER 910

SPINNING

1. Object

1.1 The object of the tests of this chapter is to demonstrate that the spinning characteristics of the aeroplane are satisfactory, and, for certain types, to determine the best method of recovery.

2. Relevant design requirements

2.1 Associated design requirements are repeated here for the convenience of flight test personnel. For design purposes the full requirements must be consulted.

2.1.1 The following requirements are extracted from Chapter 104, the paragraph numbering of the original being maintained,-

"1. The general requirements for flight under manual control are that the aeroplane, fully loaded should

.....

(vii) preferably be unspinnable; training aeroplanes excepted (see paras.16 and 17)."

"14. Single seat fighters - single or twin engined - "shall, if spinnable, be suitable for the practising "of recovery from short spins (up to 2 turns) by "service pilots."

"16. Ab-initio training aeroplanes.- All ab-initio "trainers shall enter into a spin in response to "deliberate conventional pro-spin control movements "and shall recover easily by the standard method."

"17. Intermediate training aeroplanes.- All "intermediate training aeroplanes shall be spinnable "either in response to deliberate pro-spin control "movements or by some established method of entry "and shall recover easily by the standard method "or some other defined method."

2.1.2 The following requirements are extracted from Chapter 601, the paragraph numbering of the original being maintained,-

"6.1 Ab-initio training aeroplanes

" 6.1.1 In both short (3-turn) and long (8-turn) "spins the height loss (from the time of commencing "recovery action to the regaining of full control in "level flight) shall not exceed 1,000 ft. In short

"spins recovery shall be possible in one complete "turn. During the recovery the elevator and rudder "control forces shall be less than 80 lb. and 150 lb. "respectively."

"6.2 Intermediate training aeroplanes

" 6.2.1 Recovery should be possible on twin "engined aeroplanes without recourse to differential "use of engines. The height loss in recovery from "long spins shall not exceed 2,000 ft. During the "recovery the elevator and rudder control forces shall "be less than 80 lb. and 150 lb. respectively."

"6.3 Single seat fighters

" 6.3.1 It shall be possible to recover from "short spins, though not necessarily by the standard "method. The height loss in recovery shall not "exceed 3,000 ft. when the spin is commenced at "15,000 ft. nor shall it exceed 5,000 ft. when the "spin is commenced at 30,000 ft. During the recovery "the elevator and rudder control forces shall be less "than 80 lb. and 150 lb. respectively."

3. Applicability

3.1 The tests of para.7.1 shall be made on ab-initio training aeroplanes.

3.2 The tests of para.7.2 shall be made on intermediate training aeroplanes.

3.3 The tests of para.7.3 shall be made on single seat fighters which are spinnable.

3.4 The tests of para.7.4 may be called for on aeroplanes other than those referred to in paras.3.1 to 3.3 inclusive.

4. Equipment

4.1 Automatic observer

4.1.1 An automatic observer shall be fitted capable of making a continuous record of the following,-

(i) elevator control force, and

(ii) rudder control force.

B

Equipment (cont'd)

4.2 Tail parachute

4.2.1 A tail parachute+ shall be fitted in accordance with the requirements of Chapter 716, and before commencing a programme of spinning tests the pilot should conduct at least one ground test of its installation in order to familiarise himself with its functioning. When the aeroplane is sent to an Experimental Establishment for official tests a spare tail parachute shall be supplied.

5. Loading

5.1 The tests of paras.7.1.1, 7.2.1 and 7.3.1 shall be made at special loadings corresponding to the full service loading X, the forward loading Y and the aft loading Z, each modified by the removal of armament stores and externally carried drop tanks.

5.2 The tests of paras.7.1.2, 7.2.2, 7.3.2 and 7.4 shall be made at a special loading corresponding to loading X, modified by the removal of armament stores and externally carried drop tanks.

5.3 Where ballast is used to obtain the required loadings, the distribution of ballast shall be such as to represent the appropriate moments of inertia.

6. General test conditions

6.1 Altitude

6.1.1 Each spin shall commence,-

(i) on ab-initio training aeroplanes, at 8,000 ft.,

(ii) on intermediate training aeroplanes, at 15,000 ft.,

(iii) on spinnable single-seat fighters at 15,000 ft., and at 30,000 ft., and

(iv) on other spinnable aeroplanes, at 15,000 ft.

6.2 Flaps and alighting gear

6.2.1 The tests shall be made with flaps and alighting gear up except that the tests of para.7.1 shall be repeated with flaps and alighting gear down.

+ The tail parachute is fitted as an insurance against unsatisfactory spin-recovery characteristics during flight tests. It is not acceptable as a standard fitment to ensure recovery from a spin on an aeroplane in service.

General test conditions (cont'd)

6.3 Engine cooling devices

6.3.1 Tests shall be made with the engine cooling devices in two or more positions if the position of these devices has any adverse effects on the spinning characteristics.

6.4 Direction of spin

6.4.1 In each test the spins shall be made in each direction.

7. Tests

7.1 Ab-initio training aeroplanes

7.1.1 Spins from straight flight.- Short (3 turn) and long (8-turn) spins shall be made, entering from straight stalls with the engine throttled. In each spin the effect of moving the control column forward during the spin, the effect of moving the ailerons, and the effect of opening up the engine shall be tried to see whether a more vicious spin (as measured by height loss in recovery) can be produced. Recovery shall be by the standard method, i.e. full opposite rudder followed by forward movement of the control column until rotation stops. A continuous record of elevator and rudder control force shall be made throughout the recovery and the height loss (from the time of commencing recovery action to the regaining of control in level flight) noted. This test shall be made with the longitudinal trimmer at each of its extreme settings, i.e. at the limits of available movement.

7.1.2 Spins from turning flight.- The aeroplane shall be trimmed to glide, with the engine throttled, at 1.3 times the stalling speed appropriate to the flap setting. It shall be put into a turn at the same speed and held at 45° of bank. The speed shall be reduced by pulling the control column back until the aeroplane stalls. At the stall full bottom rudder shall be applied and the control column pulled right back. After 3 turns of the spin with the controls held in this position, recovery shall be initiated by the standard method. A continuous record of elevator and rudder control force shall be made throughout the recovery and the height loss noted.

7.1.3 The test of para.7.1.2 shall be repeated commencing with the engine developing power for level flight at 1.3 times the stalling speed, and throttling back during the spin.

C

Tests (cont'd)

7.2 Intermediate training aeroplanes

7.2.1 Spins from straight flight.- Long spins shall be made with the engine(s) throttled. The effect of fore and aft trim setting shall be explored sufficiently to ascertain the best setting for recovery. In each spin the effect of moving the control column forward during the spin and the effect of moving the ailerons shall be tried to see whether a more vicious spin (as measured by the height loss in recovery) can be produced. The effect of opening up the engine(s) and their differential use shall be determined. A continuous record of elevator and rudder control force shall be made throughout the recovery and the method of recovery and the height loss noted.

7.2.2 Spins from turning flight.- The aeroplane shall be trimmed to fly with the engine(s) developing power for level flight at 1.3 times the stalling speed. It shall be put into a turn at the same speed and held at 45° of bank. The speed shall be reduced by pulling the control column back until the aeroplane stalls. At the stall, full bottom rudder shall be applied and the control column pulled right back. As the spin starts the engine(s) shall be throttled and the spin held for 3 turns with the controls in the pro-spin positions, after which recovery shall be initiated. A continuous record of elevator and rudder control force shall be made throughout the recovery and the method of recovery and the height loss noted.

7.3 Single seat fighters

7.3.1 Spins from straight flight.- On single seat fighters which are spinnable short spins shall be made entering from straight stalls with the engine(s) throttled. On twin-engined aeroplanes, recovery should, if possible, be made without recourse to the differential use of engines. Sufficient tests shall be made to ascertain the best use of controls and trimmer settings for recovery, and whether the use of engine(s) is advantageous. A continuous record of elevator and rudder control force shall be made throughout the recovery and the method of recovery and the height loss noted.

7.3.2 Spins from turning flight.- The aeroplane shall be trimmed to fly with the engine(s) developing power for level flight at 1.3 times the stalling speed. It shall be put into a turn at the same speed and held at 45° of bank. The speed shall be reduced by pulling the control column back until the aeroplane stalls. At the stall, full bottom

Tests (cont'd)

rudder shall be applied and the control column pulled right back. As the spin starts the engine(s) shall be throttled and the spin held for 3 turns with the controls in the pro-spin positions, after which recovery shall be made as in para.7.3.1. It shall also be ascertained whether it is advantageous to leave the engine(s) on during the spin and the recovery. A continuous record of elevator and rudder control force shall be made throughout the recovery and the method of recovery and the height loss noted.

7.3.3 If, on a particular type, the flaps are intended to be used in fighting manoeuvres, the tests of para.7.3.2 shall be repeated with flaps down, and the behaviour reported.

7.4 All other aeroplanes

7.4.1 Spinning tests will not in general be required until the reports on the stalling tests of Chapter 907 have been received and considered. If those tests show undesirable spinning tendencies which are not easily checked, 2-turn spinning tests may be required. Any method of recovery may be used, including differential use of engines on twin-engined types. It should be ascertained on single-engined types if it is advantageous to leave the engine running during the spin and recovery. A continuous record of elevator and rudder control force shall be made throughout the recovery and the method of recovery and the height loss noted.

8. Notes

8.1 Throughout this chapter short and long spins denote 3-turn and 8-turn spins respectively.

D

CHAPTER 911

FLIGHT UNDER ASYMMETRIC POWER

Note.- The subject matter of this chapter has been completely revised with A.L.No.37 and incorporates material from J.A.C.Papers Nos.297 and 311. A

CHAPTER 911

FLIGHT UNDER ASYMMETRIC POWER

1. Object

1.1 The object of the tests of this chapter is to demonstrate that the control and stability of the aeroplane, with particular reference to rudder and aileron effectiveness, are satisfactory in the following conditions,-

(i) immediately following engine failure,

(ii) during steady flight with one or more engines dead, and

(iii) on the approach and landing with one or more engines dead.

2. Relevant design requirements

2.1 Associated design requirements are repeated here for the convenience of flight test personnel. For design purposes the full requirements must be consulted.

2.1.1 The following requirements are extracted from Chapter 601, the paragraph numbering of the original being maintained.

"7.1 Control immediately following engine failure on initial climb

" 7.1.1 If any engine fails on the initial "climb it shall be possible to regain control of the "aeroplane by use of rudder and ailerons alone, "without throttling back the live engine(s). Until "control is regained the aeroplane shall be at a "height not less than that at which the engine "failure occurred. The aileron and rudder control "forces when straight flight has been resumed, but "before retrimming, shall be less than 30 lb. and "100 lb. respectively."

"7.2 Control immediately following engine failure in level flight

" 7.2.1 If any engine fails in level flight "under maximum continuous power it shall be possible "to regain control by use of ailerons alone with feet "off the rudder bar, and without throttling back the "live engine(s). The rudder shall not lock over "during this manoeuvre, and the aileron control forces "when straight flight has been resumed, but before "retrimming, shall be less than 50 lb."

"7.3 Control in steady flight under asymmetric power

" 7.3.1 Trim.- It shall be possible to trim "out all control forces in straight flight with wings "level (within 3°) at a speed+ of 1.3 $V_{i\ mp}$ with the "live engine(s) under maximum emergency cruising power "and all engines on one side throttled, only the out- "board propeller being feathered.

" 7.3.2 Rudder control.- When trimmed as in "para.7.3.1 and at a speed of 1.3 $V_{i\ mp}$ further "application of rudder (over-correcting) shall require "a continuously increasing force until full rudder is "reached, the aeroplane being kept on a straight "course by use of aileron."

" 7.3.3 Turns.- When trimmed as in para.7.3.1 "it shall be possible to make 30° banked turns in "either direction at a speed of 1.3 $V_{i\ mp}$."

"7.4 Control during approach under asymmetric power

" 7.4.1 With all engines on one side dead, only "the outboard propeller being feathered, the live "engine(s) throttled back and the aeroplane trimmed "with flaps and alighting gear down at a speed of 1.3 Vs_1 "it shall be possible to halve the rate of descent by "partially opening up the live engine(s) without undue "difficulties being experienced in controlling the "resultant swing and roll by use of rudder and ailerons."

3. Applicability

3.1 The tests shall be made on all multi-engined aeroplanes.

4. Equipment

4.1 Automatic observer

4.1.1 An automatic observer shall be fitted capable of making a continuous record of the following,-

(i) aileron control force,

(ii) rudder control force, and

(iii) rudder position.

5. Loading

5.1 The tests of paras.7.1 and 7.2 shall be made at the full service loading, and the test of para.7.3 at the maximum permissible landing weight.

+ $V_{i\ mp}$ is the speed for minimum drag power in level flight (see Report AAEE/Res/170).

B

6. General test conditions

6.1 Altitude

6.1.1 The tests shall be made at any convenient altitude.

6.2 Direction of thrust

6.2.1 Each test shall be made with engine failure simulated first on the port side and then on the starboard side.

6.3 Engine cooling devices

6.3.1 The tests of paras.7.2 and 7.3 shall be made with the engine cooling devices set to the minimum drag position on the dead engine(s) and to the fully open position on the live engine(s).

7. Tests

7.1 Control immediately following engine failure

7.1.1 Initial climb.- With all control forces trimmed out the aeroplane shall be flown under maximum take-off power, flaps and alighting gear up, at a speed of 1.2 V_{S_2}. An outer engine shall be throttled back as rapidly as possible and no corrective action taken until 2 seconds have elapsed or until an angle of bank of 20 degrees has been reached, whichever occurs first. The pilot shall then apply rudder and aileron, and determine whether he can regain control and subsequently steady flight without the aeroplane ever being below that height at which engine failure was simulated. The aileron and rudder control forces to maintain straight flight at 1.2 V_{S_2} and without retrimming or feathering shall then be measured.

7.1.2 The test of para.7.1.1 shall be repeated with the flaps at the maximum lift position+, the stalling speed being adjusted accordingly.

7.1.3 Level flight.- All control forces shall be trimmed out in level flight under maximum cruising power. With the pilot's feet off the rudder bar an outer engine shall be throttled back as rapidly as possible and no corrective action taken until 4 seconds have elapsed or until an angle of bank of 30 degrees has been reached, whichever occurs first. The pilot shall then apply aileron only and determine whether he can regain control and subsequent steady flight. Any

+ The "maximum lift position" is that flap position which would be used immediately after a baulked landing.

Tests (cont'd)

tendency for the rudder to lock over shall be noted, and the aileron control force to maintain straight flight at the initial trimmed speed, without retrimming or feathering, shall be measured.

7.2 Control in steady flight under asymmetric power

7.2.1 Trim.- The aeroplane shall be flown in straight flight+ with the wings level (within 3°) at a speed of $1.3V_{i\ mp}$ with all the engine(s) on one side under maximum emergency cruising power, and all the engine(s) on the other throttled (only the outboard propeller being feathered). The pilot shall determine whether it is possible to trim out all control forces. He shall then reduce speed by moving the elevator alone and shall determine,-

(i) the lowest speed at which it is possible to fly straight with wings level (within 3°), all control forces being trimmed out, and which trimmer limits this speed, and

(ii) the lowest speed at which it is possible to fly straight with wings level (within 3°) when using rudder and aileron in addition to full trimmer, and the factor limiting this speed. The out of trim aileron and rudder control forces shall be measured.

7.2.2 Rudder control.- With the aeroplane trimmed for asymmetric power at a speed of $1.3V_{i\ mp}$ as in the test of para.7.2.1, the pilot shall progressively apply rudder, until full rudder deflection is obtained, the aeroplane being kept on a straight course by use of aileron. The variation of rudder force with rudder displacement shall be noted together with the general behaviour of the aeroplane.

7.2.3 Turns.- When trimmed for asymmetric power at a speed of $1.3V_{i\ mp}$ as in the test of para.7.2.1 the pilot shall make 30° banked turns in each direction and shall report on any difficulties encountered.

7.3 Control during approach under asymmetric power

7.3.1 The aeroplane shall be trimmed to glide at $1.3\ V_{s1}$ with flaps and alighting gear down, with all the engine(s) on one side dead (only the outboard propeller being feathered), and the live engine(s) throttled back. The pilot shall then partially open the throttle(s) of the live engine(s) to reduce the rate of descent by half and shall determine whether it is possible to control the resultant swing and roll by use of rudder and ailerons, without retrimming.

+ The aeroplane may be gaining or losing height under this condition.

C

CHAPTER 912

LATERAL AND DIRECTIONAL TRIM, STABILITY AND CONTROL

Note.- The subject matter of this chapter, as issued with A.L.No.37, incorporates material from J.A.C.Papers Nos.297 and 311.

A

CHAPTER 912

LATERAL AND DIRECTIONAL TRIM, STABILITY AND CONTROL

1. Object

1.1 The object of the tests of this chapter is to demonstrate that the lateral and directional characteristics of the aeroplane are satisfactory by investigation of,-

(i) the lateral and directional stability, including the oscillatory stability,

(ii) the aileron and rudder characteristics,

(iii) the steady rates of roll, and

(iv) the flight conditions at which the aileron and rudder trimmers can trim out the aileron and rudder control forces.

2. Relevant design requirements

2.1 Associated design requirements are repeated here for the convenience of flight test personnel. For design purposes the full requirements must be consulted.

2.1.1 The following requirements are extracted from Chapter 601, the paragraph numbering of the original being maintained.

"8.1 Spiral stability

" 8.1.1 It is not a requirement that the "aeroplane be spirally stable since spiral instability "produces effects which are easily controlled and, "moreover, provision of spiral stability may be "detrimental to more important flying aspects. Any "spiral instability should, however, be mild."

"8.2 Oscillatory stability

" 8.2.1 When the aeroplane is trimmed for "straight flight without sideslip, put into a steady "straight sideslip of small angle and the controls "abruptly released, the controls shall thereafter "return to their trimmed positions. Within one cycle "the oscillation of the aeroplane shall be damped to "half its original amplitude."

"8.3 Application of sideslip

" 8.3.1 When the aeroplane is trimmed for "straight flight without sideslip, the aileron and "rudder control forces and deflections shall increase "steadily as the angle of sideslip is increased up to

"the maximum obtainable or the design limit, whichever "is the lesser, and there shall be no tendency for the "aileron or rudder to over-balance. The angle of "sideslip corresponding to a rudder control force of "150 lb. or to full rudder, if this can be produced "with a lesser force, shall be within the design limit, "and shall be not greater than 67% of the angle of "sideslip at which the fin stalls."

"8.4 Rate of roll at high speed

" 8.4.1 At a speed of 0.85 V_D, at a height of "10,000 ft., and with an aileron control force of "50 lb. for a stick control or 80 lb. for a wheel "control, or with full aileron, if this can be "produced with a lesser force, the steady rate of roll ""p" (degrees per second) shall be not less than,

$$\frac{86\ V_D}{S}\left(1 - \frac{0.3}{\sqrt{1-M^2}}\right)$$

"where V_D ... knots ... design diving speed (when V_D is greater than 475 knots the value 475 shall be used).

S ... sq.ft. .. gross wing area (when S is less than 250, the value 250 shall be used).

M ..... Mach No. appropriate to 0.85 V_D at 10,000 ft.

"The steady rate of roll shall however be not less than "7 degrees per second."

"8.5 Rate of roll at low speed

" 8.5.1 With flaps and alighting gear both up "and down, at a speed of 1.3 times the appropriate "stalling speed, and with an aileron control force of "30 lb. for either a stick or wheel control or with "full aileron, if this can be produced with a lesser "force, the helical angle $\frac{1}{57.3}\frac{pb}{2V}$ shall be not less "than 0.07 radians at sea level.

"where b ... feet ..... wing span
V ... feet per second .. true air speed

"For naval aeroplanes a greater degree of lateral "control is required and with flaps and alighting gear "down, the helical angle shall be not less than 0.09 "radians at sea level at a speed of 1.1 times the "stalling speed, with a force of 20 lb." B

"8.6 Rate of growth of rolling velocity

" 8.6.1 At any altitude the rate of growth of "rolling velocity shall be such that when the aileron "is applied in t seconds, the rate of roll at the "completion of aileron application is not less than "

$$p\left[1-\frac{1}{k}(1-e^{-k})\right]$$

"where k ..... $\frac{tV_i\sqrt{\sigma}}{2.2w}$

Vi ... knots ..... equivalent airspeed

w .. lb/sq.ft. .. wing loading

e ..... base of Naperian logarithms

σ ..... relative density at appropriate altitude."

"8.7 Aileron angle

" 8.7.1 Under each of the conditions of paras. "8.4 and 8.5 the aileron angle when the specified force "is applied shall lie within the design limits."

"8.8 Change of trim with speed

" 8.8.1 When all control forces are trimmed out "on a climb at the best climbing speed and the "aeroplane is then dived to the design diving speed, "the aileron control force to maintain zero sideslip "without turning shall be less than 15 lb. for a stick "control or 20 lb. for a wheel control and the rudder "control force shall be less than 150 lb."

"8.9 Aileron and rudder trimmers

" 8.9.1 It shall be possible to trim out the "aileron and rudder control forces at any engine "power over the following speed ranges,-

(i) flaps and alighting gear down, from 1.3 V_{s1} to 1.6 V_{s1}, and

(ii) flaps and alighting gear up, from 1.2 V_{s2} to the design diving speed."

"8.10 Change of trim with power

" 8.10.1 When the throttles are rapidly closed "the change of aileron control force shall be less than "10 lb. for a stick control or 15 lb. for a wheel "control and the change of rudder control force less "than 75 lb."

3. Applicability

3.1 The tests shall be made on all aeroplanes.

4. Equipment

4.1 Visual instruments

4.1.1 The following visual instruments shall be fitted,-

(i) angle of sideslip indicator,

(ii) aileron control force indicator, and

(iii) rudder control force indicator.

4.2 Automatic observer

4.2.1 An automatic observer shall be fitted capable of making a continuous record of the following,-

(i) airspeed,

(ii) altitude,

(iii) aileron position,

(iv) rudder position,

(v) aileron control force,

(vi) rudder control force,

(vii) direction gyro,

(viii) rate of roll meter,

(ix) gyroscopic angle of bank indicator,

(x) angle of sideslip, and

(xi) time base indicator.

5. Loading

5.1 The tests shall be made at the full service loading X.

6. General test conditions

6.1 Altitude

6.1.1 Except where otherwise stated the tests shall be made at any convenient altitude.

C

General test conditions (cont'd)

6.2 Direction

6.2.1 The tests of paras.7.1 to 7.4 inclusive shall be made in each direction.

7. Tests

7.1 Oscillatory stability

7.1.1 All control forces shall be trimmed out during,-

(i) level flight under combat power,

(ii) level flight at about $1.3V_{i\ mp}$ under the corresponding power, and

(iii) a climb at the best climbing speed under maximum climbing power.

The aeroplane shall then be yawed, by applying the necessary rudder and aileron control forces, to a steady straight sideslip of 5° as indicated on the visual angle of sideslip indicator. The ailerons and rudder shall then be quickly released and a continuous record made on the automatic observer until the oscillation of the aeroplane is completely damped out or has completed 5 cycles, whichever occurs first.

7.2 Straight sideslip

7.2.1 All control forces shall be trimmed out during,-

(i) level flight under combat power,

(ii) level flight at about $1.3V_{i\ mp}$ under the corresponding power,

(iii) a climb at the best climbing speed under maximum climbing power,

(iv) a glide, engine(s) throttled, at about 1.2 times the appropriate stalling speed, and

(v) a dive, throttle(s) one-third open, at between 90% and 95% of the design diving speed.

In each of the above conditions the flaps and alighting gear shall be up, but the test under condition (iv) shall be repeated with flaps and alighting gear down. The aeroplane shall be put into straight sideslips at a

Tests (cont'd)

sufficient number of angles of sideslip to determine the variation of angle of sideslip with rudder control force and whether rudder overbalance occurs. The automatic observer shall be operated to record the steady readings of the instruments before and after sideslip is applied. The pilot shall report any changes in longitudinal trim, and any tendency of the ailerons to overbalance. The limiting factor in deciding the maximum angle of sideslip obtained, (i.e. rudder or aileron movement, or rudder or aileron control force; or permissible angle of sideslip from design considerations) shall be reported.

7.3 Rate of roll at high speed

7.3.1 With all control forces trimmed out the aeroplane shall be dived steadily so as to attain a speed of 85% of the design diving speed or 410 knots if the design diving speed exceeds 475 knots, at 10,000 ft. (± 1,000 ft.). At this height, keeping the rudder fixed, the pilot shall apply aileron quickly (the time of application being between 0.5 and 1.0 second) and then hold the control fixed until a steady rate of roll is attained. Sufficient tests shall be made so as to permit the calculation, by interpolation, of the steady rate of roll corresponding to an aileron control force of 50 lb. for a stick control, of 80 lb. for a wheel control, or to full aileron, if this can be produced with a lesser force. The automatic observer shall be operated throughout the test and the results presented as curves of rate of roll against time for each condition.

7.4 Rate of roll at low speed

7.4.1 With all control forces trimmed out, flaps and alighting gear up and down, the aeroplane shall be flown at a speed of 1.3 times the appropriate stalling speed. The pilot shall apply aileron quickly (the time of application being between 0.5 and 1.0 second) and then hold the control fixed until a steady rate of roll is obtained. Sufficient tests shall be made so as to permit the calculation by interpolation, of the steady rate of roll corresponding to an aileron control force of 30 lb. for either a stick or a wheel control, or to full aileron, if this can be produced with a lesser force. The automatic observer shall be operated throughout the tests and the results presented as curves of rate of roll against time and the helical angles calculated for each condition and corrected to sea level.

7.4.2 On naval aeroplanes the test of para.7.4.1 with flaps and alighting gear down shall be made at a D

Tests (cont'd)

speed of 1.1 times the stalling speed, the aileron control force being 20 lb.

7.5 Change of trim with speed

7.5.1 With all control forces trimmed out at the best climbing speed and under maximum climbing power, the aeroplane shall be dived to a speed of between 90% and 95% of the design diving speed. If there is a marked change of longitudinal trim, use may be made of the elevator trimmer. During the dive, the aileron and rudder control forces required to maintain a straight dive with zero sideslip shall be recorded and any sideslip which may develop shall be noted.

7.6 Aileron and rudder trimmer ranges

7.6.1 The pilot shall determine whether the aileron and rudder control forces can be trimmed out in straight flight with wings level in the following conditions,-

(i) flaps and alighting gear down, at all speeds from 1.2 Vs_1 to 1.6 Vs_1 with engine(s),-

(a) throttled, and

(b) developing maximum continuous power,

(ii) flaps and alighting gear up, at all speeds from 1.3 Vs_2 to between 90% and 95% of the design diving speed with engine(s),-

(a) throttled, and

(b) developing maximum continuous power.

7.7 Change of trim with power

7.7.1 With all control forces trimmed out, the aeroplane shall be flown in level flight under combat power. The throttles shall then be quickly and fully closed, initially maintaining constant height and straight flight with wings level. The maximum aileron and rudder control forces immediately after this operation shall be measured.

CHAPTER 913

LONGITUDINAL TRIM, STABILITY AND CONTROL

Note.- The subject matter of this chapter, as issued with A.L.No.37, incorporates material from J.A.C.Paper No.297.

A

CHAPTER 913

LONGITUDINAL TRIM, STABILITY AND CONTROL

1. Object

1.1 The object of the tests of this chapter is to demonstrate that the longitudinal characteristics of the aeroplane are satisfactory by investigation of,-

(i) the static longitudinal stability margins,

(ii) the stick forces in out-of-trim dives and the accelerations on releasing the stick in recoveries from such dives,

(iii) the stick force per "g" in recoveries from trimmed dives, and

(iv) the flight conditions at which the elevator trimmer can trim out the elevator control force.

2. Relevant design requirements

2.1 Associated design requirements are repeated here for the convenience of flight test personnel. For design purposes the full requirements must be consulted.

2.1.1 The following requirements are extracted from Chapter 601, the paragraph numbering of the original being maintained,-

"9.1 Static margin

" 9.1.1 The aeroplane should be statically "stable stick free, in all flight conditions over "the practical c.g. range. In particular, it shall "be statically stable under the following "conditions,-

(i) flaps and alighting gear down, from 1.2 Vs_1 to 1.6 Vs_1 with the engine(s),-

(a) throttled, and

(b) developing power to give level flight at 1.6 Vs_1 with flaps and alighting gear down,

(ii) flaps and alighting gear up, from the best climbing speed to the design diving speed, with the engine(s),-

(a) throttled, and

(b) developing maximum continuous power."

" 9.1.2 The static stability margin, stick "fixed, may be less than the static stability margin, "stick free, but such difference shall not exceed 0.05 "at speeds up to the combat power level speed."

"9.2 Recovery from trimmed dives

" 9.2.1 In recoveries from trimmed dives, the "elevator control force (in lb.) to attain the design "normal acceleration, $n_1 g$, shall be within the limits,-

(i) for a stick control: of $3.5\ (14-n_1)$ and $9.5\ (14-n_1)$, and

(ii) for a wheel control: of $5.0\ (14-n_1)$ and $14.0\ (14-n_1)$.

"On night fighters, in order to give a greater degree "of stability, the upper limits given above may be "increased."

"9.3 Out-of-trim flight

" 9.3.1 When the aeroplane is trimmed for level "flight under maximum climbing power and dived steadily, "the elevator control force in the dive shall increase "with speed and at the design diving speed shall be "positive (i.e. a push force) and less than half the "appropriate maximum value defined in para.9.2."

" 9.3.2 When the aeroplane is dived under the "conditions of para.9.3.1 and the control column "released the normal acceleration shall not exceed "the design normal acceleration."

"9.4 Turning flight

" 9.4.1 There shall be no tendency to tighten "up in turns."

"9.5 Elevator trimmer

" 9.5.1 It shall be possible to trim out the "elevator control forces under any engine power and "over the following speed ranges,-

(i) flaps and alighting gear down, from $1.2\ Vs_1$ ($1.1\ Vs_1$ on naval aeroplanes) to $1.6\ Vs_1$, and

(ii) flaps and alighting gear up, from $1.2\ Vs_2$ to the design diving speed."

B

"9.6 Air brakes

" 9.6.1 The change of elevator control forces "when the air brakes are extended and when they are "retracted under all conditions for which they are "designed to operate shall each be less than 10 lb. for "a stick control or 15 lb. for a wheel control."

"9.7 Change of trim with power

" 9.7.1 The change of elevator control force "when the throttles are rapidly closed in level flight "under combat power shall be less than 10 lb. for a "stick control or 15 lb. for a wheel control."

"9.8 Pitching moment due to sideslip

" 9.8.1 The change of elevator control force "to counteract any pitching moment due to a straight "sideslip corresponding to a rudder control force of "100 lb. or to full rudder if this can be produced "with a lesser force, shall be less than 35 lb. for "a stick control or 50 lb. for a wheel control."

3. Applicability

3.1 The tests shall be made on all aeroplanes.

4. Equipment

4.1 Visual instruments

4.1.1 The following visual instruments shall be fitted,-

(i) accelerometer,
(ii) rudder control force indicator, and
(iii) angle of sideslip indicator.

4.2 Automatic observer

4.2 An automatic observer shall be fitted capable of making a continuous record of the following,-

(i) airspeed,
(ii) altitude,
(iii) elevator control force,
(iv) normal acceleration,
(v) elevator position,
(vi) elevator trimmer position,
(vii) rudder control force, and
(viii) angle of sideslip.

5. Loading

5.1 The tests of para.7.1 shall be made at two c.g. positions as far apart as possible,+ and, whilst no particular weights are specified for these tests, the weight difference between the two c.g. positions should be as small as possible. By keeping a time history of the fuel consumed during the tests the weight and c.g. position shall be calculated for each test reading taken, in order that due corrections may be applied.

5.2 The tests of paras.7.2 to 7.7 inclusive shall be made at the forward loading Y and the aft loading Z.

6. General test conditions

6.1 Altitude

6.1.1 The tests of paras.7.1 and 7.2 shall be made below the maximum power height corresponding to the lowest supercharger gear for maximum continuous power. If this height is very low, the tests shall be made below the maximum power height in the next supercharger gear if such is available. If none is available the tests shall be made at any convenient altitude below 10,000 feet. In any case, to minimise possible variations in power, the test readings shall be confined to a height range of 5,000 feet.

6.1.2 The tests of para.7.3 shall be made at 10,000 ft. and repeated near the service ceiling.

6.1.3 The tests of paras.7.4 to 7.7 inclusive shall be made at any convenient altitude.

6.2 Engine cooling devices

6.2.1 The engine cooling devices shall be in that position appropriate to the engine-on condition and shall be maintained constant throughout the tests.ø When their position may appreciably affect the longitudinal characteristics, sufficient repeat tests at other positions shall be made to explore this.

6.3 Cockpit hood(s)

6.3.1 Cockpit hood(s) shall remain closed throughout the tests, but repeat tests with the

---

+ The c.g. range should be at least 0.05 of the standard mean chord and preferably at least 0.1, even though this may necessitate loading the aeroplane in an artificial manner.

ø If the radiator flaps or cowling gills are thermostatically controlled, provision shall be made to enable them to be set positively at a suitable position. C

cockpit hood(s) open shall be made if this may have an adverse effect on the longitudinal characteristics.

7. Tests

7.1 Trimmed flight

7.1.1 Static margin.- With all control forces carefully trimmed out, the aeroplane shall be flown at each of a number of speeds adequately covering the following conditions,-

(i) flaps and alighting gear down, from 1.1 Vs_1 to 1.7 Vs_1 with the engine(s),-

(a) throttled, and

(b) developing power to give level flight at 1.6 Vs_1 with flaps and alighting gear down.

(ii) flaps and alighting gear up, from 80% of the best climbing speed to between 90% and 95% of the design diving speed, with the engine(s),-

(a) throttled, and

(b) developing maximum continuous power.

In trimming the aeroplane, the pilot will have to exercise considerable care and patience or otherwise the results will be largely meaningless. Calm air is also essential; tests done under "bumpy" air conditions do not yield good results. The following shall be measured - the indicated airspeed, the elevator and elevator trimmer positions, the altitude and the fuel content and location. The results of these tests, corrected as laid down in paras.8.1 and 8.2, shall be shown as curves of elevator and elevator trimmer angles against C_R ø and the static margins calculated by the method of R.A.E. Report No.Aero 1953.

7.1.2 Stick force per "g".- Starting from each trimmed flight condition of para.7.1.1(ii) a normal acceleration of not more than three-quarters of the maximum normal acceleration+ shall be applied. The pilot should keep the wings level and obtain a

---

+ If the normal acceleration achieved is greater than 2g it will be possible to calculate the stick force per "g" reasonably accurately but the accuracy will clearly increase with increasing accelerations.

ø See para.8.2

Tests (cont'd)

steady normal acceleration with a steady stick force when the flight path is horizontal and the airspeed is the same as the initial trimmed speed (the technique recommended is given in paragraph 8.3). The following shall be measured+ - the stick force, the normal acceleration, the indicated airspeed, and the altitude. The results of these tests shall be shown as curves of stick force per "g" against indicated airspeed,ø and the manoeuvre points calculated by the method of R.A.E. Report No.Aero.1953.

7.2 Out-of-trim flight

7.2.1 Stick force.- With all control forces trimmed out in level flight under maximum continuous power the aeroplane shall be dived steadily to speeds adequately covering the range up to between 90% and 95% of the design diving speed. The following shall be measured, - the indicated airspeed, the stick force, the altitude, and the fuel content. The results of these tests shall be shown as curves of stick force against indicated airspeed.

7.2.2 It may be considered advantageous to measure also the elevator angles during these tests and hence obtain additional information on static margins. In addition, since these elevator angles will be measured with trimmer angles different from those of para.7.1.1, it will be possible to check the validity of the corrections of para.8.1.

7.2.3 Acceleration on release of stick.- From each dive of para.7.2.1 recovery shall be effected by releasing the stick, taking care that the acceleration does not exceed the maximum normal acceleration. The following shall be measured - the normal acceleration obtained, the indicated airspeed, and the altitude. The results shall be shown as curves of normal acceleration against indicated airspeed.

7.3 Steady turns

7.3.1 With all control forces trimmed out, the aeroplane shall be flown at each of a number of speeds up to the combat power level speed and then

---

+ It is preferable, especially at the aft c.g. position, to make a continuous record of the instrument readings. If single-shot readings are made, care should be taken to measure the steady conditions, and not the force required to initiate recovery.

ø The stick force per "g" is based on (n-1)g where n is the normal acceleration.

D

Tests (cont'd)

put into a steady turn at constant airspeed at progressively increasing normal accelerations up to three quarters of the maximum normal acceleration. The pilot shall report any tendency for the turn to tighten, noting the corresponding airspeed and normal acceleration.

7.4 Elevator trimmer range

7.4.1 The pilot shall determine whether the elevator control force can be trimmed out in the following conditions,-

(i) flaps and alighting gear down, at all speeds from 1.2 Vs_1 (1.1 Vs_1 on naval aeroplanes) to 1.6 Vs_1 with engine(s),-

(a) throttled, and

(b) developing maximum climb power, and

(ii) flaps and alighting gear up, at all speeds from 1.2 Vs_1 to between 90% and 95% of the design diving speed with engine(s),-

(a) throttled, and

(b) developing maximum climb power.

7.5 Operation of air brakes

7.5.1 When air brakes are fitted, they shall be extended, under conditions appropriate to the type, at the maximum airspeed at which they are designed for extension. The maximum stick force during the period of extension shall be measured. Under appropriate conditions, the brakes shall be retracted and the maximum stick force during retraction measured.

7.6 Change of throttle setting

7.6.1 With all control forces trimmed out, the aeroplane shall be flown in level flight under combat power. The throttles shall then be quickly and fully closed and constant height initially maintained. The maximum stick force during this operation shall be measured.

7.7 Pitching moment due to sideslip

7.7.1 All control forces shall be trimmed out during,-

(i) a glide, engine(s) throttled, flaps and alighting gear down, at about 1.4 Vs_1,

(ii) level flight, under maximum continuous power, flaps and alighting gear up, and

(iii) a dive, throttle(s) one-third open, at between 90% and 95% of the design diving speed, flaps and alighting gear up.

In each of the above conditions the aeroplane shall be put into a steady straight sideslip with a rudder control force of 75 lb. or full rudder, if this can be produced with a lesser force. The automatic observer shall be in operation throughout this test and, in addition, the angle of sideslip shall be measured. The stick force to maintain the initial trimmed speed shall be measured. The sideslips shall be made in each direction.

8. Notes

8.1 The elevator angles shall be corrected to a constant trimmer angle. The elevator and trimmer angles shall be corrected to a mean c.g. position when consumption of fuel causes any appreciable movement of c.g. during a series of tests.

8.2 C_R is the resultant force coefficient and is equal to the weight divided by $\frac{1}{2}S\rho V^2$. In all but steep dives C_R may be assumed equal to C_L. The value of C_R shall be calculated using the weight at the time of the test, as deduced from the take-off weight less the amount of fuel consumed, and the indicated airspeed corrected for instrument error, position error and compressibility error.

8.3 When determining the stick force per "g", in order to obtain fairly steady conditions at the correct airspeed when the flight path is horizontal the following technique is recommended,-

(i) at low airspeed, the pilot should reduce the speed, then push the nose of the aeroplane down, and then pull out,

(ii) at high airspeed, the pilot should increase the speed slightly by pushing the nose down, and then pull out,

(iii) the pull out should be made smoothly but quickly enough for the desired steady normal acceleration to be attained before the flight path is horizontal. The acceleration should be kept steady for as long as practicable.

E

CHAPTER 914

QUALITATIVE HANDLING

Note.- The subject matter of this chapter, as issued with A.L.No.37, incorporates material from J.A.C.Paper No.297.

A

CHAPTER 914

QUALITATIVE HANDLING

1. Object

1.1 The purpose of the tests of this chapter is to obtain the pilot's assessment of the flying qualities and control and trim characteristics of the aeroplane in normal flight at speeds between the best climbing speed and the combat power level speed.

2. Relevant design requirements

2.1 Associated design requirements are repeated here for the convenience of flight test personnel. For design purposes the full requirements must be consulted.

2.1.1 The following requirements are extracted from Chapter 601, the paragraph numbering of the original being maintained.

"1.2 ..... at all practical loadings and under all "appropriate operating conditions the aeroplane shall "satisfactorily fulfil its specified roles ..... "

3. Applicability

3.1 The tests shall be made on all aeroplanes.

4. Equipment

4.1 No special equipment is required for these tests.

5. Loading

5.1 The tests shall be made at the full service loading X, the forward loading Y and the aft loading Z.

6. General test conditions

6.1 Altitude

6.1.1 The tests shall be made at any convenient low altitude and repeated near the service ceiling after cruising there for at least half-an-hour.

6.2 Speed and power

6.2.1 The aeroplane shall be flown in the following speed and power conditions,-

(i) climb at the best climbing speed under maximum climb power,

(ii) level flight at a number of speeds adequately covering the cruising speed range,

General test conditions (cont'd)

(iii) level flight under combat power,

(iv) glide, engine(s) throttled, at the best climbing speed.

6.3 Flaps and alighting gear.

6.3.1 The tests shall be made with the flaps and alighting gear retracted.

7. Tests

7.1 In each of the conditions of para.6 sufficient flying shall be carried out to enable a report to be rendered on,-

(i) the general flying qualities of the aeroplane including,-

(a) the ease of flying, hands and feet on and hands and feet off, in still and rough air,

(b) any tendency for poorly damped oscillations about any axis to occur, and where applicable, the suitability of the aeroplane as a bomb or gun platform,

(c) the suitability for blind flying,

(d) the suitability for formation flying,

(e) the view in rain or poor visibility,

(f) any vibration of the airframe or engine(s),

(g) noise, and

(h) crew comfort.

(ii) The characteristics of the elevator, aileron and rudder controls, including,-

(a) the heaviness and effectiveness of each control,

(b) the harmonisation of the controls,

(c) any tendency of the controls to over-balance,

(d) any oscillation or twitching of the controls,

B

(e) the self centering tendency of each control, and

(f) whether constant use of the trimmers is necessary during normal flight manoeuvres.

(iii) The characteristics of the trimmers, including,-

(a) the ease of operation, sensitivity and effectiveness of each trimmer,

(b) any tendency for the trimmers to slip from the position at which they were set, and

(c) any undue backlash in the systems.

7.2 When cord is used on the under surface of an aileron or when the aileron trimmer is adjustable only on the ground, the above tests shall be made with any convenient amount of cord fitted or with any convenient aileron trimmer setting within the limits specified by the Contractor. Sufficient repeat tests shall, however, be made with the maximum permissible amount of cord fitted or with the aileron trimmer at its extreme downward setting in order to demonstrate that in such circumstances the lateral characteristics of the aeroplane are satisfactory. To maintain an ample margin of lateral control during such tests sufficient cord shall be fitted to the under surface of the other aileron.

PART 10
FLIGHT TESTS—INSTALLATIONS

(8123) T14097/2692 500 1/44 M46506 C & P 752

PART 10

Flight Tests - Installation

CONTENTS

Chapter 1000	General installation flight test requirements
Chapter 1001	
Chapter 1002	Liquid cooled engines
Chapter 1003	Air cooled engines
Chapter 1004	Compressed air system
Chapter 1005	Fuel system
Chapter 1006	Oil system
Chapter 1007	Carbon monoxide contamination
Chapter 1008	Cabin heating
Chapter 1009	Gun heating
Chapter 1010	Controls
Chapter 1011	Automatic controls
Chapter 1012	Jettisonable pilot's hoods
Chapter 1013	Watertightness

A

CHAPTER 1000

GENERAL INSTALLATION FLIGHT TEST REQUIREMENTS

CHAPTER 1000

GENERAL INSTALLATION FLIGHT TEST REQUIREMENTS

Object

1. The object of the tests contained in this part is to ensure that the aeroplane is satisfactory with regard to the efficient operation and functioning of installations and that it complies with the Aeroplane Specification.

2. Flight tests to demonstrate the handling properties of the aeroplane are contained in Part 9.

Applicability

3. The tests contained in this part apply to all new type aeroplanes, and all aeroplanes where modifications have been made likely to affect the results of the tests, unless otherwise stated.

Loading and c.g. position

4. Unless otherwise stated in the Chapter concerned or obviously inapplicable, the tests of this part shall be made with the aeroplane loaded in each of the following ways,-

(i) full service load, and

(ii) the maximum service load possible with all equipment carried externally in place, i.e. the condition of maximum drag.

Wherever possible one series of tests to cover both conditions should be made.

5. When tests are required in an overload condition this will be specified in the aeroplane specification.

6. The c.g. may be at any convenient position.

Altitude

7. The altitude at which each test shall be made is specified when necessary.

Speed range

8. The speed range at which each test shall be made is specified when necessary.

Equipment

9. The Contractor is responsible for obtaining and fitting any special instruments and equipment required during the tests, and shall ensure that these instruments are correctly calibrated. All test equipment fitted shall remain

in place when the aeroplane is delivered to an Experimental Establishment for flight tests.

10. For the purpose of the Contractors Flight Tests the aeroplane selected for tests need not be equipped to the full operational standard but the following shall be regarded as the minimum acceptable equipment,-

Item		Applicability
(i)	Normal flying and engine instruments complete	For all Flight Tests
(ii)	The equipment specified for Contractors Flight Tests in each chapter of this Part	For test of that chapter
(iii)	R/T and W/T installations+	For tests above the cloud layer
(iv)	Navigational facilities+	
(v)	Oxygen equipment+	For tests above 15,000 ft.
(vi)	Cabin and crew heating equipment+	

Tests

11. All tests shall be carried out by the Contractor to the satisfaction of the D.T.D. before the aeroplane is accepted for tests at the official testing station, unless written instructions to the contrary are received.

12. Before despatching the aeroplane to an Experimental Establishment or Service unit, the Contractor shall certify that during the flight trials required by this part and Part 9,-

(i) an efficient supply of air, fuel, and (where applicable), coolant, was maintained under all conditions and attitudes of flight appropriate to the type of aeroplane, and

(ii) in the case of aerobatic trials involving inversion there was no appreciable loss of fuel, oil or, coolant and that inversion had no adverse effect on the functioning of the systems when the aeroplane returned to an attitude of normal flight.

+ Where this is part of the equipment specified for the remaining aeroplanes.
ø Former para.10 deleted.

B

Tests (cont'd)

13. For the convenience of presentation, the tests have been specified under individual systems, but during any tests specified for a particular system, all limitations applicable to either engine installation or aeroplane shall be observed.

14. Multi-engine aeroplanes.- In principle complete tests should be applied to each engine installation, but to economise in time and equipment, abbreviated tests will be acceptable on one or more engines. Proposals in this connection shall be agreed by the D.T.D.(R.D.I).

15. Delivery without full trials.- In special circumstances when it is agreed to be impossible to complete the tests required by this part, temperature tests shall be carried out under the most severe conditions arising during the Contractors light load tests, to ensure that the engine(s) is/are running under conditions within the range for which that type of engine has been approved.

16. When such a course is followed, the Contractor shall give a certificate that the engine and oil cooling are sufficient to enable preliminary tests at an Experimental Establishment to be made. A copy of this certificate shall be sent to the Establishment concerned clearly indicating the limitations within which the certificate is issued, together with a copy of the flight test reports on which the certificate is based.

17. An estimate shall be made of the cooling at full load under the most adverse atmospheric conditions of Appendix 6, and this estimate shall be added to the above certificate.

Notes

18. Instrument reading corrections.- All observations entered on the reports shall be first corrected for instrument errors, including altitude-temperature calibration in the case of ethyl ether thermometers,- see R.A.E. chart C.8230

19. Measurement of air temperature.- The air temperature shall be measured during level flights at low speed, of sufficient endurance to stabilise the temperature. These tests shall be made at sensibly the same time as the cooling tests but need not be made by the same aeroplane.

20. The correction to be applied to air temperature thermometers varies according to the actual installation details of the thermometer and can only be determined accurately by special flight tests. Unless more accurate information is available the measured air temperature shall be corrected by subtracting,-

$\left(\frac{V}{87}\right)^2$ °C; where V = true+ airspeed in knots.

21. Sequence of observations.- During tests, observations shall, wherever possible, be taken in the sequence indicated by the columns of the flights test report forms reading from left to right. When this is impracticable the actual sequence used shall be indicated. In climbing tests the readings appropriate to a particular altitude shall be commenced at that altitude.

(Para.22 deleted.)

23. Performance reduction methods.- The revised methods of performance reduction detailed in Report No. A.&.A.E.E/Res/170ø - "British Performance Reduction Methods for Modern Aircraft" shall be used when reporting flight test results.

24. Cases may occur where these standard methods are inappropriate or where it may appear desirable to modify the constants of the method. In such cases agreement should be reached between the firms concerned and the Experimental Establishments. In such instances, however, the method of reduction shall be clearly stated when the results are presented.

25. Temperature corrections.- The standard temperatures of Appendix 6 shall be employed when correcting test results and cooling suitabilities to climatic conditions differing from those in which the tests are made.

Results

26. A report shall be rendered by the Contractor on each test of this part and on any preliminary flight tests carried out, and six copies of the report, together with copies of the graphs of any recording instruments shall be supplied to the Resident Technical Officer. Report forms of the type shown in Appendix 7 shall be used. These are included as examples only, to indicate the readings required and when a form is called for in any test it may be modified to meet the requirements of the particular installation under test, if necessary.

+ The indicated airspeed divided by $\sqrt{\sigma}$ is acceptable.

ø These may be obtained on application in writing to the Secretary, M.A.P. Thames House South, Millbank, London S.W.1.

C

CHAPTER 1002

LIQUID COOLED ENGINES

Note.- The contents of this chapter have been completely revised with A.L.No.29 and incorporate new requirements from J.A.C.Paper No.233.

A

Amended by A.L.No.29

CHAPTER 1002

LIQUID COOLED ENGINES

Object

1. The object of the following tests is to ensure that the engine and cooling system will function efficiently, and that the cooling is adequate for the various atmospheric conditions for which the aeroplane is designed.

Applicability

2. These tests shall be made on all prototype aeroplanes and on any subsequent production aeroplane embodying alterations or modifications likely to affect the cooling or functioning of the system.

Equipment

3. The following equipment shall be fitted to those engines whose cooling systems are under test,-

(i) radiator thermometers at the engine inlet and outlet,

(ii) Mk.IA coolant pressure gauge at the coolant header tank,

(iii) in place of the thermostatic control a crew operated radiator flap control, variable over the range from fully open to closed, and

(iv) an approved type of fuel flow meter.

Tests - General

4. Radiator flap openings.- Climb and level flight tests shall be carried out with a number of radiator flap openings from fully open to closed, sufficient to establish the effect of flap position on level speed, rate of climb and cooling. The quantitative results shall be submitted as part of the flight test results.

5. On each of the subsequent climb and level flight tests of this chapter the radiator flap opening used shall be that previously determined for adequate cooling (see para.4).

6. Air intake.- For the climb and level flight tests the air intake control shall be set in the "Cold" position.

7. Coolant temperature rise.- The temperature rise across the engine shall be recorded throughout the climb and level flight tests.

8. Fuel flow.- On the climb and level flight tests, fuel flows shall be measured on the engines under test to ensure that the correct mixture conditions are being obtained.

Tests - Climb

9. Supercharged engines.- On aeroplanes with supercharged engines a separate climb shall be made under each of the three conditions and speeds of para.11. Each climb shall commence below 2,000 ft. and supercharger gear changes shall be made at the appropriate boost pressures. The climb shall continue to at least 5,000 ft. above the highest appropriate maximum power height or to the service ceiling, whichever is the lower, except that when the service ceiling of the aeroplane exceeds 35,000 ft. the test shall be continued to the service ceiling. The climb under the condition of para.11(iii) shall, however, be limited to the duration of time appropriate to the combat conditions.

10. Normally aspirated engines.- On aeroplanes with normally aspirated engines climbs under the applicable conditions and speeds of para.11 shall be made to about 1,000 ft. below the service ceiling.

11. Flight conditions.- The following engine power conditions and climbing speeds shall be used.-

(i) Maximum continuous climbing conditions and that airspeed, varying with altitude, which gives the maximum rate of climb.

(ii) Maximum continuous weak mixture cruising conditions and that airspeed, varying with altitude, which is midway between the airspeed for (i) and the maximum weak mixture level speed.

(iii) Combat engine conditions and that airspeed, varying with altitude, which gives the maximum rate of climb.

12. The temperature of the coolant at the engine outlet immediately before starting the climb shall be below the normal maximum permissible temperature by $35^{\circ}C \pm 10^{\circ}C$.

Tests - Level flight

13. The aeroplane shall be flown level under each of the conditions of paras.14 and 15. The tests of paras.14(i) and 14(ii) shall be continued until stable coolant temperatures are obtained.

14. F.S. gear.- The tests in F.S. gear shall be made under the following conditions.-

B.

Tests - Level flight (cont'd)

(i) maximum continuous weak mixture cruising conditions at the maximum power height for this engine condition or 1,000 ft. below the cruising ceiling,+ whichever is the lower,

(ii) maximum continuous rich mixture cruising conditions at the maximum power height for this engine condition,ø and

(iii) combat conditions at the maximum power height and for the duration of time for this condition, preceded by a preliminary flight of 10 minutes under maximum continuous weak mixture cruising conditions.

15. M.S. gear.- The tests in M.S. gear shall be made under the following conditions,-

(i) as for the test of 14(i),

(ii) as for the test of 14(iii), and

(iii) at the lowest practicable altitude, repeat test 15(i) or 15(ii), whichever gives the lower suitability.

16. In an engine installation in which the test altitudes for two different power conditions do not differ by more than 2,000 ft., it will suffice for the tests under these particular engine conditions to be made at the lower altitude.

17. On aeroplanes with normally aspirated engines the tests shall be made at 2,000 ft.

Tests - Ground running

(Para.18 deleted.)

19. Stationary ground run.- For the purpose of obtaining information in connection with the cooling characteristics during taxying, the following test shall be made on that engine which runs hottest in flight.

20. The test should be made when the wind speed at ground level does not exceed 10 knots.

+ "Cruising ceiling" is used in the sense of Report No. A&AEE. Res/180. Where cooling under tropical conditions is required the estimated cruising ceiling under tropical conditions shall be used.

ø This test does not apply to engines with those automatic carburettors on which there is no differentiation between rich mixture cruising and weak mixture cruising.

21. The aeroplane should stand in the open, heading across wind with the engine under test on the windward side. The aeroplane should not be sheltered by buildings or other screens.

22. The flaps controlling the engine and oil cooling shall be in the position for maximum cooling.

23. Wing flaps shall be up.

24. After starting and the usual slow running period, the engine speed shall be increased to 50% of the take-off r.p.m. with the propeller control in the take-off position. Readings of coolant temperature at the engine outlet shall then be recorded at 1 minute intervals until the temperature stabilises or until the maximum permissible coolant or oil temperature is reached. The test shall be repeated at other engine speeds if required.

25. If inadequacy of oil cooling or cooling of accessories limits the duration of the test, this fact should be specifically noted and as much relevant information as possible recorded.

Notes

26. Definition of suitability.- The suitability of a liquid cooled system is defined as,-

$$\text{suitability} = \frac{t_n - t_s}{t_o - t_a}$$

where t_n = the maximum permissible temperature, °C, of the coolant at outlet from the engine as specified in the Engine Operational Limitations for the appropriate power condition,

t_o = the temperature, °C, of the coolant at outlet from the engine measured on test,

t_s = standard atmospheric temperature, °C, applicable to the climatic condition at which suitability is required, and

t_a = air temperature, °C.

27. Minimum suitabilities.- Compliance with the requirements of Chapter 701 may be assumed if the suitabilities of the system as determined in the above climb and level flight tests are not less than 1.0 under the most adverse atmospheric conditions for which the aeroplane is designed.

(Para.28 deleted.)

C

Notes (cont'd)

29. Heating systems.- Any heating system which is controllable and the operation of which has an effect on the cooling characteristics of the engine, shall be operated in the manner most adverse to the engine cooling characteristics throughout the tests. Alternatively all tests may be repeated first with the heating inoperative and then with the heating fully on.

30. Weather.- Flight tests of cooling systems shall be made in normal weather conditions and the aeroplane shall not be flown through rain, clouds or inversions of temperature. The ground run test shall not be made in conditions of rain or fog.

31. Coolant flow.- The cooling system shall be arranged so as to provide a maximum coolant flow through the radiator. There shall be no flow through the thermostatically operated by-pass during suitability tests.

32. Safety devices.- Any safety devices for controlling pressure or temperature in the reserve coolant tank shall be set to operate within the limitations laid down in the Engine Operational Limitations.

Results

33. Climb tests.- Form 2 of Appendix 7 shall be used to record the climb tests, observations being taken at suitable intervals as agreed by the D.T.D. according to the rate of climb of the aeroplane. The suitabilities of the system shall be computed as indicated in Form 4 of Appendix 7 using the formula of para.26.

34. Level flight tests.- Form 3 of Appendix 7 shall be used to record the level flight tests, observations being taken at suitable intervals through the test. The suitabilities of the system under each stabilised temperature condition, shall be computed as indicated in Form 4 of Appendix 7, using the formula of para.26.

35. Ground running test.- Form 1 of Appendix 7 shall be used to record the ground running test.

CHAPTER 1003

AIR COOLED ENGINES

Note.- The contents of this chapter have been completely revised with A.L.No.29 and incorporate new requirements from J.A.C.Paper No.23.

Amended by A.L.No.29

CHAPTER 1003

AIR COOLED ENGINES

Object

1. The object of the following tests is to ensure that the engine and cooling system will function efficiently, and that the cooling is adequate for the various atmospheric conditions for which the aeroplane is designed.

Applicability

2. The tests shall be made on all prototype aeroplanes and any subsequent production aeroplane embodying alterations or modifications likely to affect the cooling or functioning of the system.

Equipment

3. The following equipment shall be fitted to those engines whose cooling systems are under test,-

(i) approved equipment for measuring temperatures of the cylinders of each engine (designated multi-point equipment),+ and

(ii) an approved type of fuel flow meter.

Tests - General

4. Gill openings.- Climb and level flight tests shall be carried out with a number of gill openings from fully open to closed, sufficient to establish the effect of gill position on speed, rate of climb and cooling. The quantitative results shall be submitted as part of the flight test results.

5. On each of the subsequent climb and level flight tests of this chapter the gill opening used shall be that previously determined for adequate cooling (see paragraph 4).

6. Air intake.- For the climb and level flight tests the air intake control shall be set in the "Cold" position.

7. Fuel flow.- On the climb and level flight tests fuel flows shall be measured on the engines under test to ensure that the correct mixture conditions are being obtained.

Tests - Climb

8. Supercharged engines.- On aeroplanes with supercharged engines a separate climb shall be made under each of the three conditions and speeds of para.10. They shall each commence below 2,000 ft. and supercharger gear changes shall be made at the appropriate boost pressures. The climb shall

+ Obtainable through the Resident Technical Officer.

Tests - Climb (cont'd)

continue to at least 5,000 ft. above the highest appropriate maximum power height or to the service ceiling, whichever is the lower, except that when the service ceiling of the aeroplane exceeds 35,000 ft. the test shall be continued to the service ceiling. The climb under the condition of para.10(iii) shall, however, be limited to the duration of time appropriate to the combat conditions.

9. Normally aspirated engines.- On aeroplanes with normally aspirated engines climbs under the applicable conditions and speeds of para.10 shall be made to about 1,000 ft. below the service ceiling.

10. Flight conditions.- The following engine power conditions and climbing speeds shall be used,-

(i) Maximum continuous climbing conditions and that airspeed, varying with altitude, which gives the maximum rate of climb.

(ii) Maximum continuous weak mixture cruising conditions and that airspeed, varying with altitude, which is midway between the airspeed for (i) and the maximum weak mixture level speed.

(iii) Combat engine conditions and that airspeed, varying with altitude, which gives the maximum rate of climb.

11. Where a minimum cylinder temperature for take-off is specified in the Engine Operational Limitations the temperature immediately before opening-up the engine for take-off shall not be less than this figure.

12. If the engine or installation is not designed for immediate take-off with cold oil, the oil temperature at the inlet to the engine immediately before opening up the engine for take-off shall not be less than that temperature stated in the Engine Operational Limitations.

Tests - Level flight

13. The aeroplane shall be flown level under each of the conditions of paras.14 and 15. The tests of paras.14(i) and 14(ii) shall be continued until stable cylinder temperatures are obtained.

14. F.S. gear.- The tests in F.S. gear shall be made under the following conditions,-

(i) Maximum continuous weak mixture cruising conditions, at the maximum power height for this engine condition or 1,000 feet below the cruising ceiling+, whichever

+ "Cruising Ceiling" is used in the sense of Report No.A&AEE. Res/180. Where cooling under tropical conditions is required the estimated cruising ceiling under tropical conditions shall be used.

B.

Tests - Level flight (cont'd)

is the lower,

(ii) maximum continuous rich mixture cruising conditions at the maximum power height for this engine condition,ø

(iii) combat conditions at the maximum power height and for the duration of time for this condition preceded by a preliminary flight of 10 minutes under maximum continuous weak mixture cruising conditions.

15. M.S. gear.- The tests in M.S. gear shall be made under the following conditions,-

(i) as for the test of 14(i),

(ii) as for the test of 14(iii),

(iii) at the lowest practical altitude, repeat test 15(i) or 15(ii) whichever gives the more adverse cooling.

16. In an engine installation in which the test altitudes for two different power conditions do not differ by more than 2,000 ft., it will suffice for the tests under these particular engine conditions to be made at the lower altitude.

17. On aeroplanes with normally aspirated engines the tests shall be made at 2,000 ft.

Tests - Ground running

(Para.18 deleted.)

19. Stationary ground run.- For the purpose of obtaining information in connection with the cooling characteristics during taxying, the following test shall be made on that engine which runs hottest in flight.

20. The tests should be made when the wind speed at ground level does not exceed 10 knots.

21. The aeroplane should stand in the open, heading across wind with the engine under test on the windward side. The aeroplane should not be sheltered by buildings or other screens.

22. The gills and flaps controlling the engine and oil cooling shall be in the position for maximum cooling.

23. Wing flaps shall be up.

ø This test does not apply to engines with those automatic carburetters on which there is no differentiation between rich mixture cruising and weak mixture cruising.

24. After starting and the usual slow-running period, the engine speed shall be increased to 50% of the take-off r.p.m. with the propeller control in the take-off position. Readings of cylinder temperatures shall be recorded at 1 minute intervals until temperatures stabilise, or until the maximum permissible cylinder or oil temperature is reached. The test shall be repeated at other engine speeds, if required.

25. If inadequacy of oil cooling or cooling of accessories limits the duration of the test, this fact should be specifically noted and as much relevant information as possible recorded.

Notes

26. Atmospheric temperature correction.- The following atmospheric temperature correction shall be applied,-

$$t_c = t'_c + 1.0\ (t_s - t_a)$$

where t_c = corrected cylinder temperature ^oC.

t'_c = cylinder temperature measured on test ^oC.

t_s = standard atmospheric temperature ^oC applicable to the climatic condition to which correction is required.

t_a = air temperature ^oC.

27. Heating system.- Any heating system which is controllable and the operation of which has an effect on the cooling characteristics of the engine shall be operated in the manner most adverse to the engine cooling characteristics throughout the test. Alternatively, all tests may be repeated first with the heating inoperative and then with the heating fully on.

28. Weather.- Flight tests of cooling systems shall be made in normal weather conditions and the aeroplane shall not be flown through rain, clouds or inversions of temperature. The ground run test shall not be made in conditions of rain or fog.

Results

29. Climb tests.- Form 5 of Appendix 7 shall be used to record the climb tests, observations being taken at suitable intervals as agreed by the D.G.T.D. according to the rate of climb of the aeroplane.

30. Level flight tests.- Form 6 of Appendix 7 shall be used to record the level flight tests, observations being taken at suitable intervals throughout the tests.

C

Chapter 1003
Amended on 1st Nov.1944
(Re-issued on 1st Feb.1946)

Results (cont'd)

31. Ground running test.- Form 1 of Appendix 7 shall be used to record the ground running test.

32. Engine limitations.- The recorded temperatures shall be corrected to the most adverse atmospheric conditions for which the aeroplane is designed using the formula of para.26 and Form 7 of Appendix 7.

CHAPTER 1004

COMPRESSED AIR SYSTEMS

Note.- The subject matter of this chapter was previously contained in A.D.M.464.

A

CHAPTER 1004

COMPRESSED AIR SYSTEMS

1. Object

1.1 The object of the following tests is to determine whether the cooling of the air compressors is satisfactory.

2. Applicability

2.1 The tests shall be made on one prototype of each new type of aeroplane and on the first of any production aeroplanes which embody alterations or modifications likely to affect the operation of the existing compressed air systems.

3. Equipment

3.1 R.A.E. and Arrow compressors

3.1.1 An oil temperature thermometer (R.A.E. type) installed in a thermometer pocket (A.G.S.940) shall be fitted in the air compressor delivery to the reservoir, as near as possible to the compressor.

3.2 Heywood compressor (type SH6/2)

3.2.1 A thermo-couple (type 14A) shall be attached to a thermo-couple adaptor union (Heywood type) which shall be fitted as shown in S.I.S.258. The 5 ft. lead of this thermo-couple shall be joined by a suitable terminal block to a thermometer lead (type "A", length 40 ft.) connected to a Mk.I cylinder temperature thermometer.

3.3 B.T.H. compressor (type A.V.)

3.3.1 A thermo-couple (type 14A) in a valve cap (B.T.H. type) shall be attached to the cylinder head. The thermo-couple shall be connected to a Mk.I cylinder temperature thermometer as in the case of the Heywood compressor.

4. Tests

4.1 R.A.E. and Arrow compressors

4.1.1 During the engine cooling tests of Chapter 1002 or 1003 as appropriate and also during the automatic pilot tests of Chapter 1011, the temperature indicated by the thermometer installed shall be recorded.

Tests (cont'd)

4.2 Heywood (type SH6/2) and B.T.H.(type A.V.) compressors

4.2.1 During the engine cooling tests of Chapter 1002 or 1003 as appropriate, the compressor temperatures shall be recorded, the compressed air system being operated as given in paras.4.2.2 and 4.2.3.

4.2.2 On at least one of the climb tests, immediately before take-off, or at 1,000 ft. if a greater braking reserve is desired at take-off, the compressor air reservoir pressure shall be adjusted to approximately 100 lb/sq.in.

4.2.3 During each level flight test under maximum continuous weak mixture cruising conditions, the reservoir pressure shall be reduced to approximately 100 lb./sq.in.

5. Notes

5.1 Atmospheric temperature correction

5.1.1 The following atmospheric temperature correction shall be applied,-

$$t_c = t'_c + 0.8\ (t_s - t_a)$$

where t_c = corrected cylinder or air outlet temperature ^{o}C.
t'_c = cylinder or air outlet temperature measured on test ^{o}C.
t_s = standard atmospheric temperature ^{o}C, applicable to the climatic condition to which correction is required.
t_a = air temperature ^{o}C.

6. Results

6.1 Results of the tests of para.4 shall be recorded as shown on Form 12 of Appendix 7.

6.2 The recorded temperatures shall be corrected to the most adverse atmospheric conditions for which the aeroplane is designed using the formula of para.5.1 and Form 13 of Appendix 7.

B

CHAPTER 1005

FUEL SYSTEM

Note.- The subject matter of this chapter was previously contained in A.D.M.464.

A

CHAPTER 1005

FUEL SYSTEM

Object

1. The object of the following tests is to ensure that the fuel system will function efficiently.

Applicability

2. The tests shall be made on all new type aeroplanes, and all aeroplanes embodying alterations or modifications likely to affect the efficient operation of the fuel system.

Equipment

3. The following instruments shall be fitted,-

(i) fuel flowmeter(s)+, supplied by A.&.A.E.E.,

(ii) fuel temperature thermometers close to carburettor inlet,

(iii) fuel pressure transmitting gauge (unless already a standard fitment) in the inlet to the carburettor, and

(iv) fuel pressure transmitting gauge on the inlet side of engine driven pump.

Tests

(Para.4 deleted.)

5. Fuel jettisoning.- If necessary the following tests may be made in stages, but it is essential that all tanks drained by one discharge pipe be emptied simultaneously.

6. An initial ground test shall be made to check the operation of the controls and valves, and to ensure that there are no leaks in the system. The tanks shall be filled with fuel or a suitable fluid and jettisoned by operation of the controls. The time taken for the tanks to empty and the amount of fluid left in the tanks should be recorded.

7. A flight test, flaps up, shall be made to check whether any parts of the aeroplane will be splashed by fuel but, because of the risk of fire, fuel shall not be used for the purpose of the test. The fuel tanks shall be filled with a suitable staining fluid and the aeroplane parts most likely to be affected shall be treated so that a record of any splashing may be obtained. Arrangements shall be made to ensure that there is a supply of fuel available for

---

+ Required for endurance tests at Experimental Establishment.

the engines during the test, and temporary modification of the fuel system may be necessary. The fluid shall be jettisoned when the aeroplane is flying with flaps up and undercarriage retracted, at a speed approximately 1.3 times the stalling speed, flaps up. The aeroplane shall be landed as soon as possible afterwards and the fuselage etc. examined for splashing.

8. The test of para.7 shall be repeated with the flaps down at a speed of approximately 1.3 times the appropriate stalling speed, flaps down.

9. It may be desirable to carry out similar tests at the cruising speed with flaps up, but in general this is not considered essential. In border line cases it may be required that the tests are repeated with fuel being jettisoned, but in no circumstances should this be done without the prior concurrence of the Director, R.A.E.

Notes

10. When carrying out the jettison tests the following rules to which the pilot shall conform are given for information,-

(i) the jettison valves shall be closed before landing,

(ii) the pilot shall not land near the place where the fuel has fallen to the ground. It is particularly important that this should be borne in mind when the pilot is circling to find a suitable landing place. Whenever conditions permit the pilot should avoid hail and dust storms when jettisoning.

11. During the climb tests of Chapter 1002 or 1003 as appropriate, the following observations shall be recorded at intervals of 2,000 to 4,000 feet according to the rate of climb of the aeroplane as agreed by the P.D.T.D.-

(i) the fuel pressure at the carburettor inlet,

(ii) the fuel pressure at the inlet to the engine driven pump, and

(iii) the fuel temperature measured as near to the carburettor inlet as the installation will permit.

(Para.12 deleted)

AP 970 Design Requirements for Aeroplanes AL25.37 19480801 OCR.pdf Page 795

CHAPTER 1006

OIL SYSTEM

Note.- The subject matter of this chapter was previously contained in ADM.197

A

CHAPTER 1006

OIL SYSTEM

Object

1. The object of the following tests is to demonstrate that a satisfactory circulation of the oil is maintained and that the temperature remains within the limits required by the Director of Technical Development, when the aeroplane is operating under,-

(i) the specified operational conditions for the type of engine fitted, and

(ii) all climatic conditions for which the aeroplane is designed.

Applicability

2. These tests shall be made on all prototype aeroplanes and on any subsequent production aeroplane embodying alterations or modifications likely to affect the cooling or functioning of the oil system.

Equipment

3. The following equipment shall be fitted to those engines whose oil systems are under test,-

(i) oil thermometers between the tank outlet and the pressure pump inlet, between the engine outlet and the cooler inlet and between the cooler outlet and the tank inlet, and

(ii) oil pressure gauges in the main pressure system, at the cooler inlet and at the cooler outlet.

Tests - Climb and level flight

4. Oil temperature and pressure measurements shall be taken at suitable intervals throughout the climb and level flight tests of Chapter 1002 or 1003 as appropriate.

Tests - Ground running

5. Cold starting.- The following test shall be conducted for the purpose of obtaining information in connection with the cold starting characteristics.

6. This test should be made when the ground atmospheric temperature is below the minimum oil temperature permitted for take-off.

CHAPTER 1007

CARBON MONOXIDE CONTAMINATION

Note.- The subject matter of this chapter was previously contained in A.D.M.513.

A

CHAPTER 1007

CARBON MONOXIDE CONTAMINATION

Applicability

1. The following tests shall be made on all new type aeroplanes. When any alteration or modification is made which may affect the access of carbon monoxide to the crew stations or its concentration the tests shall be repeated.

Equipment

2. An approved carbon monoxide indicator shall be fitted for the following tests.

Tests

3. At an early stage in the flight tests the percentage of carbon monoxide in the air at all crew stations shall be measured.

4. Contaminations shall be reckoned as partial pressures of carbon monoxide, expressed in units of hundred thousandths of one standard atmosphere.

5. Measurements shall be made in each of the following conditions,-

(i) taxying in all directions for a total of five minutes with hood and windows at the settings customary for the aeroplane (a reading at the pilot's station only need be taken in this condition),

(ii) during the last five minutes of a full throttle climb to the service ceiling,

(iii) during level flight on full throttle at the maximum power height.

Notes

6. The R.A.E. (Mat/Ch.Dept.) will give advice and assistance upon the methods of making these tests, on application through the R.T.O. (or V.T.O.).

Results

(Para.7 deleted.)

8. The Director, R.A.E. should be consulted as to the continued flying or testing of the aeroplane when carbon monoxide concentrations approaching twenty units on the ground or five units in flight are found.

9. The measurements given by M.S.A. and R.A.E. (Mk.II) carbon monoxide indicators will be accepted as measurements of the contamination of air as defined by para.4. No correction of these measurements is required for decreasing air pressure at altitude.

CHAPTER 1008

CABIN HEATING

Amended by A.L.No.29

CHAPTER 1008

CABIN HEATING

Object

1. The object of the following tests+ is to ensure that the cabin heating systems function efficiently and that the requirements of Chapter 105 in this respect are met.

Applicability

2. The tests shall be made on all prototype non-pressurised aeroplanes*, and on the first of any such production aeroplanes which embody alterations or modifications likely to affect the operation of the existing heating system.

Loading and C.G. position

3. For the purpose of these tests any convenient loading and C.G. position may be used.

Altitude

4. The tests shall be made at an altitude 2,000 feet below the full load service ceiling or at 35,000 feet, whichever is the lower, except that if a particular altitude has been specified, at which compliance with the minimum temperature requirements must be met, the tests shall be made at this specified altitude.

Instruments

5. Means shall be provided for measuring the temperature,

(i) of the outside air,

(ii) at the crew's feet and hands at all stations,

(iii) at such items of equipment, excluding guns, whose efficiency may be impaired when operating at low temperatures and for which minimum permissible temperatures are laid down in Chapter 105, and

(iv) of the air in the main duct(s);

(a) at a point as near as possible to the heater unit,

(b) at a point where the duct(s) enter the fuselage, at the outlets to the cabin etc, and

---

+ Reference should be made to M.A.E.E. Report No.H/Eq/267.

* Requirements for pressurised aeroplanes will be issued later.

(c) adjacent to the airspeed measuring instrument (see para.7).

6. The outside air temperature shall be measured by a thermometer of an approved type, which will be supplied to Contractors on loan on application to the Director, R.A.E. (S.M.E. Dept.), unless an air temperature thermometer for which the full correction factors are known, is available, when this may be used.

7. The velocity of the air in the main duct(s) shall be measured by an instrument of an approved type, e.g. by a low reading airspeed indicator connected to a small pitot-static head which should be placed in the centre of the duct in a straight portion where this is possible.

8. Advice on the positioning of the above instruments can be obtained from the Director, R.A.E. (S.M.E. Dept.)

Tests

9. When possible the cabin heating systems, together with all subsidiary heating systems which may affect the cabin heating, shall be turned on when the engine(s) is/are running up. When this is not possible, as in the case of combustion heaters employing rammed air, the systems shall be turned on immediately after take-off. The aeroplane shall then be climbed at the best climbing speed to the altitude required by para.4 above.

10. When this altitude is reached, windows, doors or apertures, which may safely be opened, shall be opened and the heat turned off. The aeroplane shall cruise under these conditions for 15 minutes, in order to dissipate the greater part of the residual heat of the aeroplane. During this period the temperatures should be noted every 5 minutes.

11. Those windows, doors or apertures, which are intended to be open during any period of operational flying, shall remain open and the remainder shall now be closed. The heat shall be turned on and the aeroplane flown at the maximum economical cruising conditions in weak mixture for one hour (45 minutes for fighters) or until the temperatures are stabilised. The temperatures shall be noted every 10 minutes during this period.

Atmospheric temperature conditions

12. When the results are being corrected to the atmospheric conditions of Appendix 6, a difference in the outside air temperature of t°C shall be assumed to change internal temperatures by 0.75 t°C except for cabins or turrets with large direct-vision openings when the correction factor will be supplied for individual cases by the Director, R.A.E. (S.M.E. Dept).

B.

Design information

13. The following measurements shall be taken to enable an estimate to be made of the heat output and are for design information only.

14. When stabilised temperatures are obtained under the conditions of para.11 readings shall be noted of the velocity of the air in the main duct(s) and of the thermometer placed adjacent to the airspeed measuring instrument.

15. The heat output shall be calculated in terms of horse power according to the following formula

$$\text{Heat output} = .000475 \times V \times A \times C \times \sigma \times (T_D - T_A) \times \frac{273 + T}{273 + T_D}$$

where V = true airspeed at centre of duct, mph.

A = area of cross section of duct, sq.ins.

\+ C = correction factor for average flow through duct if the airspeed is measured at the centre.

σ = standard I.C.A.N. relative density at the test height.

T_D = temperature of air in duct, ^{o}C.

T_A = temperature of outside air, ^{o}C.

T = standard I.C.A.N. temperature at the test height, ^{o}C.

\+ For circular and rectangular ducts C shall be taken as 0.8 and 0.7 respectively. Advice on the flow in ducts of other shapes can be obtained from the Director, R.A.E. (S.M.E. Dept).

CHAPTER 1009

GUN HEATING

Note.- The subject matter of this chapter was previously contained in A.D.M.546.

AP 970 Design Requirements for Aeroplanes AL-25-37-19460801-OCR.pdf

CHAPTER 1009

GUN HEATING

Applicability

1. The following tests shall be made on all new type aeroplanes fitted with fixed and/or free gun installations, and all new gun heating systems.

Loading and c.g. position

2. On all aeroplanes not carrying bombs the loading shall be the typical Service load.

3. On all aeroplanes carrying bombs the loading shall be the typical Service load, less bombs.

4. In both the above cases full ammunition load shall be carried. Conditions simulating full ammunition may be arranged if this is preferable.

Altitude

5. The tests shall be made at the service ceiling when carrying the above loads.

Equipment

6. Approved thermometer equipment shall be fitted; this equipment will be supplied on loan on application to the D.G.T.D.

Tests

7. Tests for both fixed and moveable guns shall be made.

(Para.8 deleted.)

9. When the service ceiling is reached, level flying shall continue until the gun temperature remains constant over a period of ten minutes. A temperature variation of not more than ± 2°C is permitted.

10. Turret guns shall be tested in the normal parked position.

Notes

11. Engine.- The engine conditions for these tests shall be maximum power for continuous cruising at weak mixture.

Notes (cont'd)

12. Inter-connected cockpit and gun heating systems.- In aeroplanes fitted with heating systems supplying hot air to both cockpit and gun bays from a common duct, the cockpit heating shall be fully on, to provide for the condition of minimum heat to the guns.

13. Breech blocks.- Where guns with rear sears are fitted they shall be tested with the breech block back.

14. All other guns shall be tested with the breech block forward and with a round in the chamber. Firms will be supplied with dummy rounds for this purpose on application to D.Arm.D.

15. Gun muzzles, ejection and link chutes.- No sealing is permitted. Flaps, doors and other devices to give either manual or automatic opening shall not be used.

16. The results of the above tests shall be corrected to sub-arctic conditions.

+ Distribution of reports requirement deleted (see Chap.1000).

B.

CHAPTER 1010

CONTROLS

Note.- The subject matter of this chapter was previously contained in A.D.M. 464.

A

Amended by A.L.No.28

CHAPTER 1010

CONTROLS

Engine controls

1. The operation of engine controls shall be checked during flight trials and it shall be confirmed that.-

(i) excessive loads at the control levers, particularly the carburettor and alternative air intake shutter controls, are not experienced.

(ii) at constant engine speed the incremented boost response is approximately equal for equal movements of the carburettor control, above the minimum cruising boost. Below the minimum cruising boost the incremented speed response is approximately equal for equal movements of the carburettor control,

(iii) there is no appreciable backlash nor elastic deformation in the engine control systems or their supports, and

(iv) the operation of all controls is smooth and of sensibly constant resistance over their range of movement.

Propeller feathering

2. Each propeller feathering system shall be checked for satisfactory operation in flight, except in systems where unfeathering can only be effected on the ground. When an electrically operated feathering system is to be tested care shall be taken to ensure that the accumulator is fully charged prior to take-off and the operation should not be repeated at the risk of exhausting the accumulator (one complete cycle per engine or three per aeroplane, whichever is the greater, is a recommended standard).

3. Ground functioning tests to the satisfaction of the D.G.A.I. shall be made of those systems in which unfeathering can only be effected on the ground.

CHAPTER 1011

AUTOMATIC CONTROLS

FS/74

Amended by A.L.No.23

CHAPTER 1011

AUTOMATIC CONTROLS

Tests

1. Both ground tests and air tests of the complete installation shall be made. These shall be done under the supervision of a representative from the R.A.E. with facilities provided by the Contractor. The tests will furnish information in brief on the following points.-

(i) the correctness of the air pressure (which should be approximately 60-lb. per square inch in the case of Mark IV instruments), and

(ii) the performance of the automatic controls in straight flight, during turns, during climbing and gliding and at all speeds up to the maximum speed.

Notes

2. The tests will necessitate the adjustment of the follow-up ratios for the three controls,- rudder, elevator, and aileron, in order to determine the correct proportion of control surface movement to be applied to restore the aeroplane to normal conditions of trim and course, after a disturbance, without over correction. These adjustments shall be made in calm air conditions and shall be followed by check test flight in bumpy conditions.

CHAPTER 1012

JETTISONABLE PILOT'S HOODS

Note.- The subject matter of this chapter is from J.A.C. Paper No.209.

FS/61

CHAPTER 1012

JETTISONABLE PILOT'S HOODS

Object

1. The object of the following tests is to ensure that the jettisoning of the pilot's hood is satisfactory under flight conditions.

Applicability

2. The tests shall be made on all new type aeroplanes and on aeroplanes embodying alterations or modifications to the hood likely to affect its satisfactory operation. The design shall first, however, have been cleared for flight testing by model and mechanical tests.

Altitude

3. The jettison tests shall be carried out at the altitude corresponding to maximum level speed. The aeroplane shall first be flown for 15 minutes at its service ceiling, it shall then be dived to the test altitude.

Speed

4. The tests shall be carried out at that speed, within the range of speed shown to be safe by wind tunnel tests, which is judged to be the most adverse to satisfactory release.

Tests

5. Preliminary flight with open hood.- Tests shall first be made, preferably up to the test altitude of para. 3, to ascertain that the removal of the hood will not affect unduly the stability of the aeroplane, and that other characteristics do not appear which would make the aeroplane unsafe to fly. This shall normally be done by flight tests with the hood removed but the fully open hood position may be used instead, provided that this does not alter the aerodynamic shape of the fuselage, and that the opening thus formed is the same as when the hood is removed.

6. Jettison test.- With the hood closed and under the conditions specified above, the hood shall be jettisoned. Any difficulty of operation of the jettison release gear which would prolong the time of exit in an emergency shall be reported. After flight the rear portions of the aeroplane shall be inspected for damage.

Notes

7. Film records shall be taken of the flight path of the hood when operational equipment, which would possibly be in the path of the released hood, (e.g. wireless mast) is not fitted to the aeroplane under test.

8. In the case of pressure cabin aeroplanes, the test shall be carried out at zero cabin differential pressure and it will generally be acceptable to test at the highest altitude at which this can conveniently be done, up to the test altitude of para.3.

FS/62

CHAPTER 1013

WATERTIGHTNESS

Note.- The subject matter of this chapter has been amended to include the requirements of A.D.M.613.

A

CHAPTER 1013

WATERTIGHTNESS

1. Object

1.1 The object of the following tests is to determine compliance with the requirements for the satisfactory watertightness of the cabin and of other parts of the aeroplane containing equipment, including electrical wiring, the efficiency of which may be impaired by water.

2. Applicability

2.1 The tests shall be made in full on all prototype aeroplanes and on the first of any subsequent production aeroplanes which embody alterations or modifications likely to affect the watertightness.

3. Tests +

3.1 Ground tests

3.1.1 All sliding canopies, windows, direct vision openings, inspection covers, etc. shall be closed and the aeroplane shall then be exposed to heavy rain (or an artificial spray simulating heavy rain) for a minimum period of 20 minutes. The appropriate parts of the aeroplane shall then be inspected for leaks and accumulations of water.

3.2 Flight tests

3.2.1 The aeroplane shall be flown immediately after the completion of the test and inspection of para.3.1.1 to check if any collected water is blown into the cabin or other parts, when the aeroplane is flown after standing in the rain.

3.2.2 The aeroplane shall be flown in heavy rain, preferably from a wet airfield, for a period sufficient to ensure a thorough check for watertightness being made.

3.2.3 If possible all sliding canopies, windows, direct vision openings, inspection covers, etc. shall be inspected for leaks during take-off, flight, and alighting. Where it is not possible to observe the watertightness of these components under the conditions given they shall be inspected immediately after landing.

3.2.4 If direct vision openings are fitted they shall be opened in flight during heavy rain, to demonstrate that no water enters through them.

+ Note.- On pressure cabin aeroplanes the tests shall be made after the fuselage has been pressure tested and accepted and shall be made with the cabin internal pressure equal to the outside atmospheric pressure.

APPENDICES

(8123) T14097/2692 500 1/44 M46506 C & P 752

APPENDICES

CONTENTS

Appendix 1	Definitions
Appendix 3	Wing load distribution - Monoplane
Appendix 5	Load distribution - Tail Unit
Appendix 6	Standard atmospheric conditions
Appendix 7	Report forms
Appendix 8	Standard physical characteristics of the average airman.

Note.- The information placed in the following Appendices is supplementary to that given in the previous Parts of the Publication and is issued for the guidance of all concerned. In general, the Appendices do not contain "Requirements", but in certain instances, the subject matter in these Appendices may be placed in the category of a "Requirement" by a clause elsewhere in the Publication or in the Aeroplane Specification.

A

Dept of Aeronautical
Engineering
Sydney University

P.

APPENDIX 1

DEFINITIONS

1. Acceleration

1.1 Maximum normal acceleration coefficient (n_1)

1.1.1 The maximum normal acceleration coefficient is the value of "n" which is accepted at the design stage as being the highest positive value for which a particular aeroplane need be designed to cover symmetric flight manoeuvres, the value being chosen on the basis of the intended use of the type, modified (if appropriate) by the characteristics of the individual design. It is denoted throughout the text by the symbol n_1.

1.2 Normal acceleration coefficient (n)

1.2.1 The normal acceleration coefficient "n" is the resultant of the total aerodynamic force acting perpendicularly to the flight path, divided by the total weight of the aeroplane.

2. Aerofoil section

2.1 The true aerofoil section of a wing, with or without sweepback, is that section which is parallel to the plane of symmetry of the aeroplane.

3. Ceiling

3.1 Service ceiling

3.1.1 The service ceiling is that height at which the maximum rate of climb of the aeroplane is 100 feet per minute.

4. Chord

4.1 Chord line

4.1.1 The chord line of an aerofoil section is the straight line through the centres of curvature of the leading and trailing edges of the section.

4.2 Chord length (c)

4.2.1 The chord length is the length of that part of the chord line which is intercepted by the aerofoil section.

4.3 Quarter chord point

4.3.1 The quarter chord point is the point on a chord line situated one quarter of the chord length aft of the leading edge.

A

Chord (cont'd)

4.4 Standard mean chord

4.4.1 The length of the standard (or geometric) mean chord is the gross wing area divided by the span. The position of the standard mean chord is expressed by the co-ordinates ($\bar{x}$, $\bar{z}$) of its quarter-chord point and its inclination ($\bar{\theta}$) to the xy plane where $\bar{x}$, $\bar{z}$, and $\bar{\theta}$ are given by,-

$$\bar{x} = \frac{1}{S}\int_{-\frac{b}{2}}^{+\frac{b}{2}} c\,x\,dy, \quad \bar{z} = \frac{1}{S}\int_{-\frac{b}{2}}^{+\frac{b}{2}} c\,z\,dy, \text{ and } \bar{\theta} = \frac{1}{S}\int_{-\frac{b}{2}}^{+\frac{b}{2}} c\,\theta\,dy$$

and S is the gross wing area, b the span, and c the local chord length.

4.5 Standard mean chord for a biplane

4.5.1 For a biplane the gross area S_1 and S_2 and the mean chords $\bar{c}_1$ and $\bar{c}_2$ should first be found separately for each wing, the appropriate spans b_1 and b_2 being used in each case. The length, position and inclination of the mean chord for the system should then be determined by the following equations.-

$$\bar{c} = \frac{S_1\bar{c}_1 + S_2\bar{c}_2}{S_1 + S_2} \qquad \bar{z} = \frac{S_1\bar{z}_1 + S_2\bar{z}_2}{S_1 + S_2}$$

$$\bar{x} = \frac{S_1\bar{x}_1 + S_2\bar{x}_2}{S_1 + S_2} \qquad \bar{\theta} = \frac{S_1\bar{\theta}_1 + S_2\bar{\theta}_2}{S_1 + S_2}$$

where the suffices 1 and 2 denote the upper and lower surfaces respectively.

5. Classification of aeroplane parts

5.1 For strength considerations only, the following classification applies to all detail parts (or elements), assembled parts, and components parts (or complete units).

5.1.1 Class 1. A Class 1 part is defined as one whose failure in flight, landing, or take-off might be the direct cause of,-

(i) structural collapse,
(ii) loss of control,
(iii) failure of motive power,
(iv) unintentional release of, or inability to release, any armament store, or
(v) unintentional operation of, or inability to operate,

Classification of aeroplane parts (cont'd)

(a) guns, R.P.'s etc. or

(b) undercarriage.

(If the failure would only lead to danger through a second unlikely event, e.g. a broken aerial mast jamming the tail unit controls, the part is not within the definition of Class 1).

5.1.2 Class 2. A Class 2 part is defined as a stressed part not covered by the terms of Class 1.

5.1.3 Class 3. A Class 3 part is defined as an unstressed or only lightly stressed part.

5.2 Standard components and structures

5.2.1 A standard component is the weakest component that can be made complying with the relevant drawings and material specifications, all limits and tolerances being taken in the most adverse direction. An exception to this rule is made in the case of parts fabricated from rolled sheet and strip where the nominal thickness dimension is used instead of the most adverse one. A standard structure is one built throughout of standard components.

5.3 Typical components and structures

5.3.1 A typical component is one made in accordance with usual workshop procedure. A typical structure is one built throughout of typical components.

6. Factor

6.1 Reserve factor

6.1.1 The reserve factor is the ratio of the load which could be withstood by the structure (found by calculation or test) to the ultimate load or the proof load. (For structures just complying with requirements, both these reserve factors would have the value 1.0).

7. Load

7.1 Proof load

7.1.1 The proof load is the product of the specified load (or the load corresponding to the specified conditions) and the proof factor.

AP 970 Design Requirements for Aeroplanes AL25-37 19460801 OCR.pdf Page 626

Load (cont'd)

7.2 Ultimate load

7.2.1 The ultimate load is the product of the specified load (or the load corresponding to the specified conditions) and the ultimate factor.

8. Span

8.1 The span of a wing is its overall width, measured between lines drawn tangential to the wing tips and parallel to the fuselage centre line.

9. Speed

9.1 Design diving speed (V_D)

9.1.1 The design diving speed is the speed accepted at the design stage as being the highest equivalent air speed for which the particular aeroplane need be designed, the value being chosen on the basis of the intended use of the type, modified (if appropriate) by the characteristics of the individual design. It is denoted throughout the text by the symbol V_D.

9.2 Equivalent air speed (E.A.S.)

9.2.1 Equivalent air speed is defined as the product of the true speed and the square root of the relative density of the standard atmosphere.

9.3 Maximum level speed (V_M)

9.3.1 The maximum level speed is the maximum equivalent air speed attainable in level flight at any altitude (or at one specified altitude) and at any engine speed up to and including the maximum emergency (i.e. "all-out level") r.p.m. within the limits of permissible level flight boost.

9.4 Stalling speed

9.4.1 When the term is used in connection with flight tests, stalling speed is defined as the lowest speed at which the aeroplane can be held in a straight glide, engine off, for a period of one minute under ground level conditions.

9.4.2 When the term is used in connection with wind tunnel tests, stalling speed is defined as the air speed at which, under ground level conditions, the total lift on the aeroplane is equal to the weight, the attitude of the aeroplane being such that the lift

coefficient is a maximum. Appropriate corrections should be made for aspect ratio, scale effect and body lift, etc. but no allowance for slip-stream effect should be made.

10. Tail volume coefficient

10.1 The tail volume coefficient $\overline{v}$ is defined by the relation,-

$$\overline{v} = \frac{\ell S'}{\bar{c} S}$$

where ℓ = distance in feet from C.G. of the aeroplane to the mean quarter chord point of the tailplane and elevator.
S' = gross area of tailplane and elevator(s), sq.ft.
$\bar{c}$ = standard mean chord of wing, ft. (para.4.5)
S = gross wing area, sq.ft. (para.11.1).

10.2 The gross tail area is defined similarly to gross wing area. Where there is a gap between the inboard ends of the elevators, the area of the gap should not be included in the gross area (see figure 1) but the area of any part of the fixed tail surface or fuselage in this gap should be included (see figure 2). Where the tailplane has end fins the gross area should be extended outwards to the centre line of these fins (see figure 2).

11. Wing area

11.1 Gross wing area

11.1.1 The gross wing area is the area of the complete lifting surface. Where this is broken by the fuselage, the leading and trailing edges of the inboard ends of the wings should be joined by straight lines across the fuselage, and the surface assumed continuous, fillets being ignored. Where the surface is broken by wing engines the leading and trailing edges should be assumed continuous, and the overhang of the nacelles ignored. The gross wing area is then given by the equation,-

$$S = \int_{-\frac{b}{2}}^{+\frac{b}{2}} c\,dy$$

Where c is the length of the chord at any fore and aft section, y is the distance from the plane of symmetry, and b the span.

C

Wing area (cont'd)

11.2 Nett wing area

11.2.1 The nett wing area is the area outboard of the junction of the wings and fuselage, fillets being ignored. It should be obtained by deducting from the gross area a rectangle having one side equal to the chord at the junction of the wings and fuselage, and another equal to the fuselage width at the centre section.

FIG.1

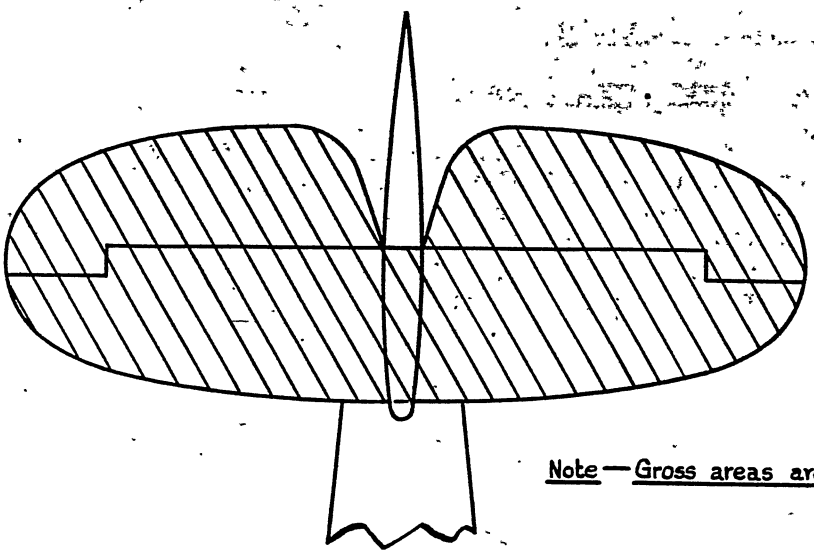

Note — Gross areas are shaded

FIG.2

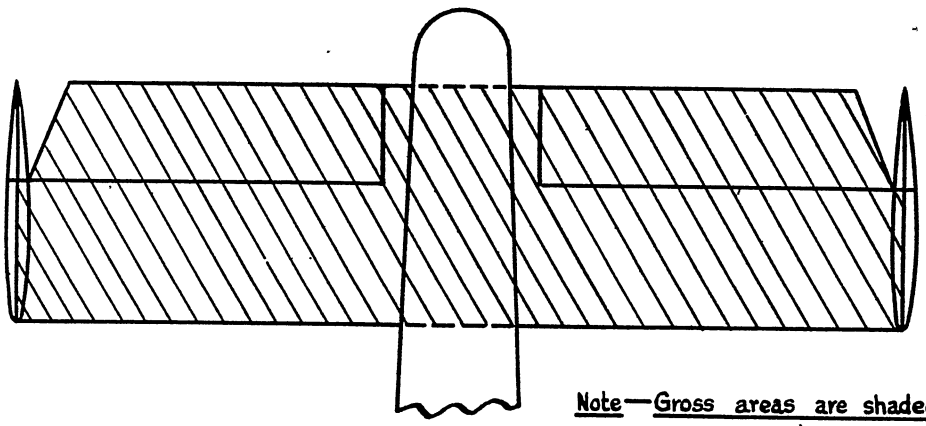

Note — Gross areas are shaded

DEFINITION OF TAIL VOLUME COEFFICIENT

D

APPENDIX 3

WING LOAD DISTRIBUTION - MONOPLANE+

1. General.- (i) This chapter deals with the calculation of the shape of the curve of load distribution along the span of a wing, the chord of which varies from wing root to wing tip. An acceptable alternative method involving the use of "induction factors" is given in R. & M. No.1643. A method is also given for calculating the pitching moment of such a wing.

(ii) Prior to the development of the Prandtl theory, tapered wings were commonly dealt with on the assumption that each section was independent of those on either side, this method being known as the "Strip Theory." It can be shown that in many cases calculations based on this theory may lead to an over-estimation of the strength of the wing structure, and hence the more accurate method described in this chapter should be used in preference to the "Strip Theory."

(iii) A twisted wing is defined as one in which the no-lift lines of all the sections are not parallel. This may be due to a geometrical twist which tilts the chord lines of the various sections relative to each other, or it may be due to an aerodynamic twist caused by a variation in the no-lift angles of the aerofoils forming the wing at different points along the span. Both these effects are often present simultaneously. For the purpose of the calculations described in this chapter the total twist only is of importance, and it is immaterial how much of this is due to the one cause and how much to the other.

(iv) For an untwisted wing the shape of the load distribution curve is the same for both normal flight cases and for the terminal velocity dive and inverted flight cases. This is not so when the wing is twisted as then the load distribution curve may vary considerably with incidence, particularly at low angles of incidence.

(v) The calculations described below deal with a wing the root of which is on the centre line of the aeroplane. In para.3(ix) a correction is given to take account of the loss in lift due to the presence of the fuselage which masks, or replaces, a portion of the wing at the centre. The root chord, c_o, of the wing is found by producing the leading and trailing edges of the actual wing up to the centre line of the aeroplane. The characteristics of the aerofoil section at the wing root (i.e. no-lift angle, slope of lift-incidence curve, etc.) may be found by plotting the known characteristics for the various sections along the actual wing and producing by eye the curves so formed beyond the point at which the wing merges into the fuselage up to the centre line of the aeroplane.

2. Notation.- (i) The notation employed is as shown in fig.1, together with the following:-

α = angle of incidence of any section of the wing measured (in radians) from the no-lift line of that particular section.

a = slope of the curve of lift coefficient against angle of incidence (radians) for the section considered, corrected to infinite aspect ratio (see below).

c = chord of section.

a_o, α_o, c_o } similar quantities at the wing root, i.e., on the centre line of the aeroplane (see above).

$$u = \frac{ac}{4s}$$

$$\cos\theta = \frac{y}{s} \text{ (see fig.1).}$$

+ Attention is drawn to the fact that throughout this chapter the old notations of k_L, k_D and k_m are used for lift, drag and moment coefficients.

AP 970 Design Requirements for Aeroplanes AL25-37 19460801 CCR.pdf

Appendix 3

S = area of complete wing (port and starboard) including that portion of the wing masked or replaced by the fuselage, referred to in the text as the "assumed wing."

λ = tip chord/root chord for straight tapered wing with maximum chord at the wing root.

k_L = mean lift coefficient of the whole wing, assuming the centre (fuselage) portion of the wing to be a lifting surface.

A = aspect ratio of wing = $\frac{(2s)^2}{S}$

s = semi-span.

w = loading in pounds per inch run along span.

(ii) Determination of "a".- The slope a, of the lift curve for two-dimensional flow is always very close to π. In the absence of any data the value 3.0 should be used. Generally, tests will be available of finite wings of aspect ratio A the slope of the lift curve being a_A. If the results have not been corrected for wind tunnel interference this must first be done.

(a) If a' is the observed slope then a_A the true slope for the aspect ratio A is given by

$$a_A = \frac{a'}{1 + .274 \frac{S_T}{C} a'}$$

where S_T is the area of the model wing and C the cross sectional area of the tunnel. This formula applies to square closed tunnels and to the duplex tunnel when the model is tested horizontally.

(b) a_A is now corrected to infinite aspect ratio by the curve given in fig.2. This shows the ratio $\frac{a}{a_A}$ as a function $\frac{A}{a_A}$, where A is the aspect ratio of the tested wing.

(c) The no-lift angle of the finite wing is the same as that of the infinite wing.

3. Lift coefficient.- (i) General method.- The method consists in expressing the load distribution curve as a Fourier's series and determining the coefficients by fitting the Fourier expression to the characteristics of the wing at selected points. To reduce the labour involved in calculating the load distribution curve for any given wing the analysis has been carried as far as possible in general terms, the point at which the general treatment must give place to detailed numerical treatment being dependent upon the type of wing concerned.

(ii) It is convenient to divide tapered wings into the following groups:-

(a) Straight tapered untwisted wings. In this type the leading and trailing edges are straight, the chord decreasing uniformly from the root to the tip.
(b) Straight tapered twisted wings.
(c) Curved tapered untwisted wings.
(d) Curved tapered twisted wings.

These four types are dealt with below in this order, the simplest type being considered first.

(iii) Straight tapered untwisted wings.- The load distribution curve for a straight tapered wing can be obtained directly from fig.3. This gives several curves corresponding to a series of values of λ, where

$$\lambda = \frac{\text{chord at wing tip}}{\text{chord at wing root}}$$

In practice the wing tip will usually be rounded to some extent, in which case the tip chord is determined by producing the leading and trailing edges to cut the tangent at the wing tip.

The top half of fig.4 is derived from fig.3 by cross plotting and is convenient for interpolation. The values of the ordinates in fig.4 correspond to a root incidence of 1 radian from no-lift, the linear relationship between k_L and α being assumed to hold up to this incidence.

STRAIGHT TAPERED WING.

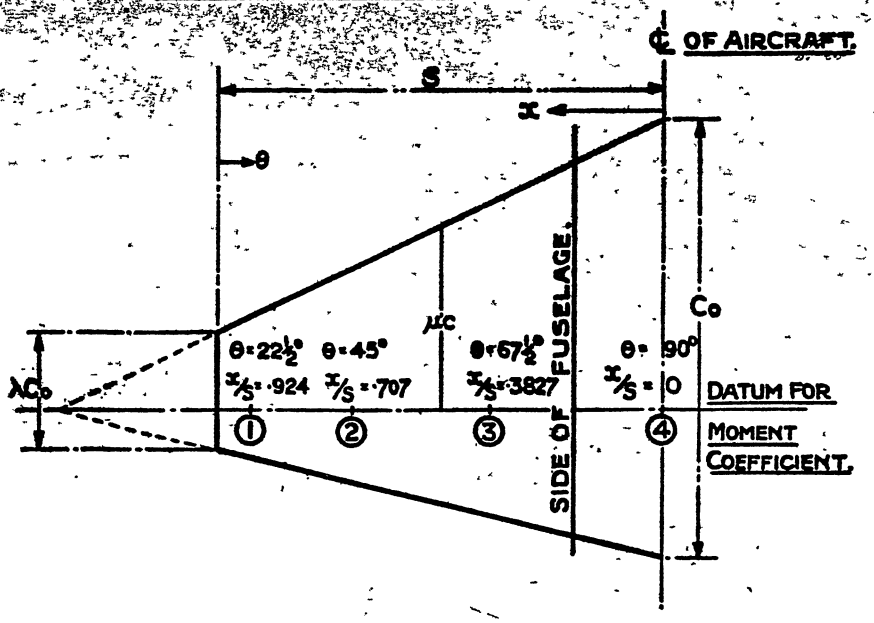

CURVED TAPERED WINGS.

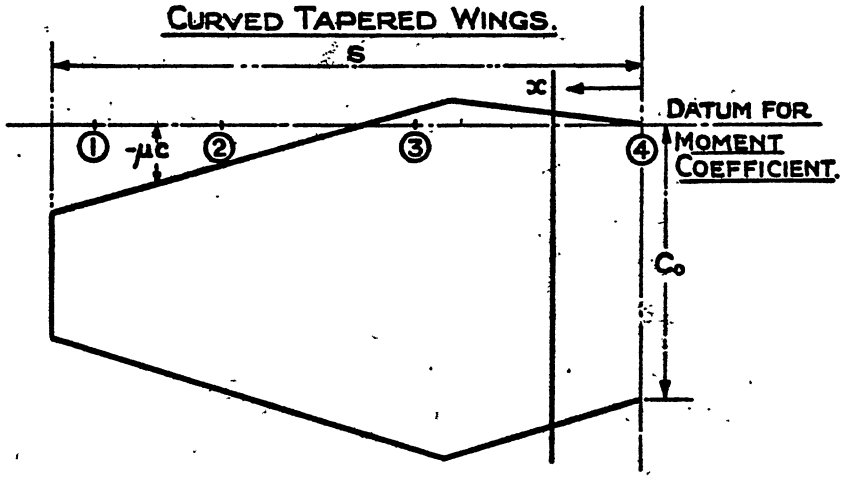

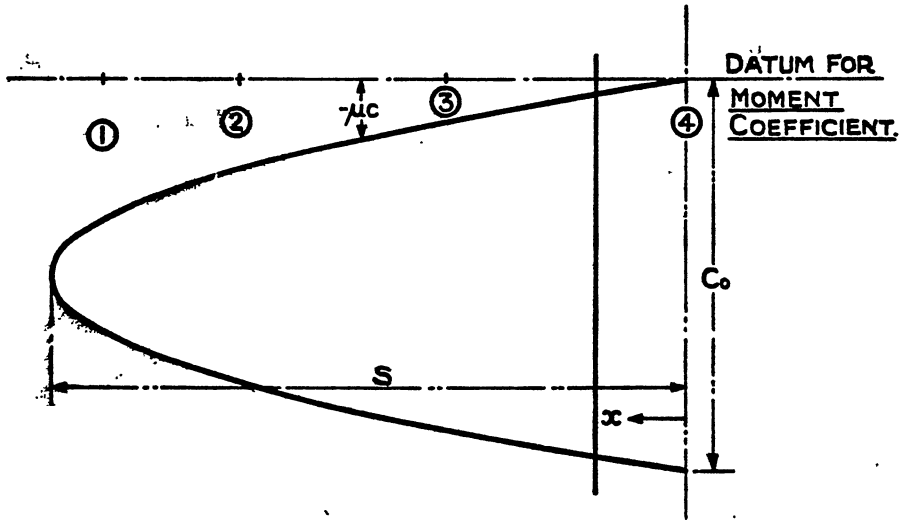

FIG.1 APPEND.3

RELATION BETWEEN SLOPE OF LIFT CURVE OF INFINITE AND FINITE WING.

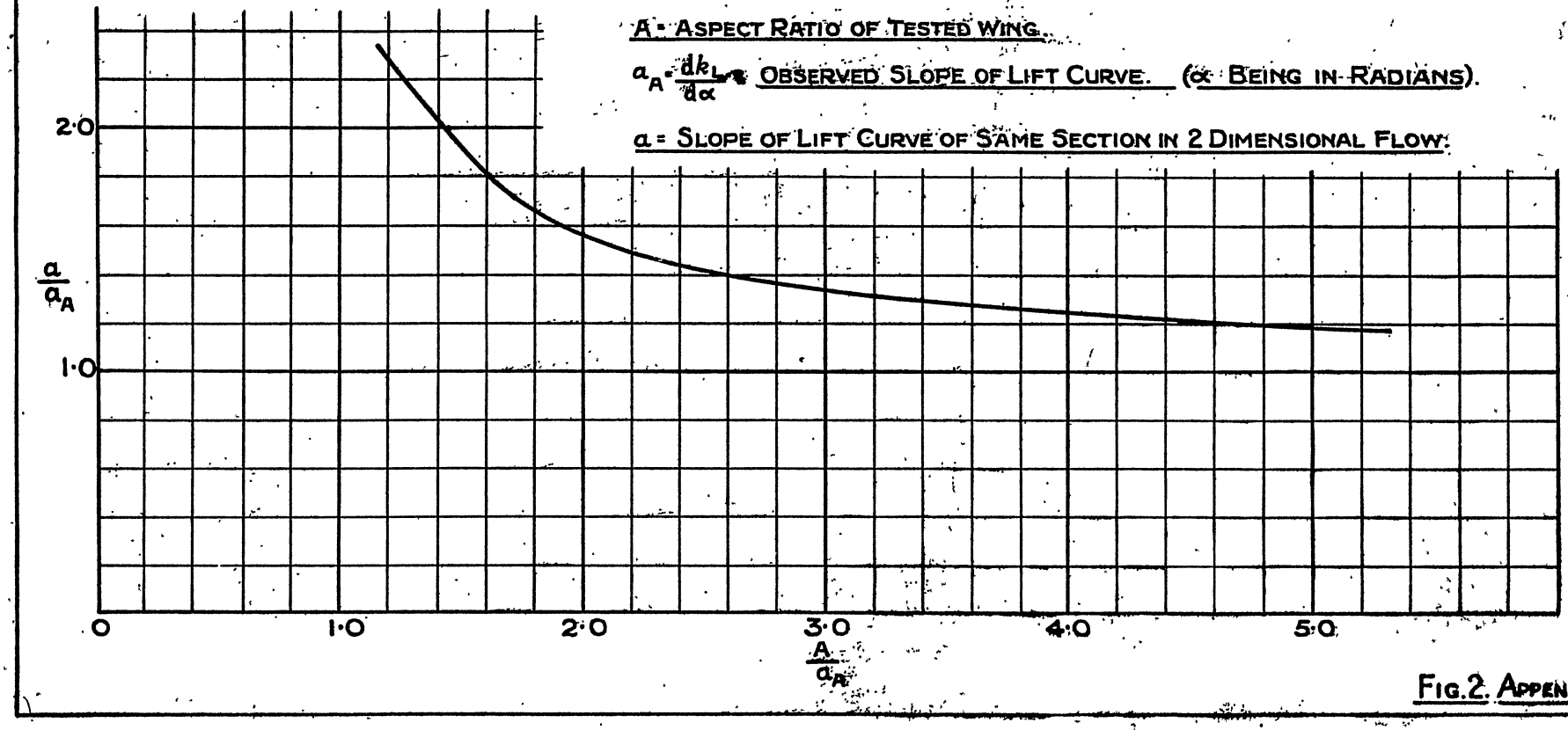

FIG. 2. APPEND. 3

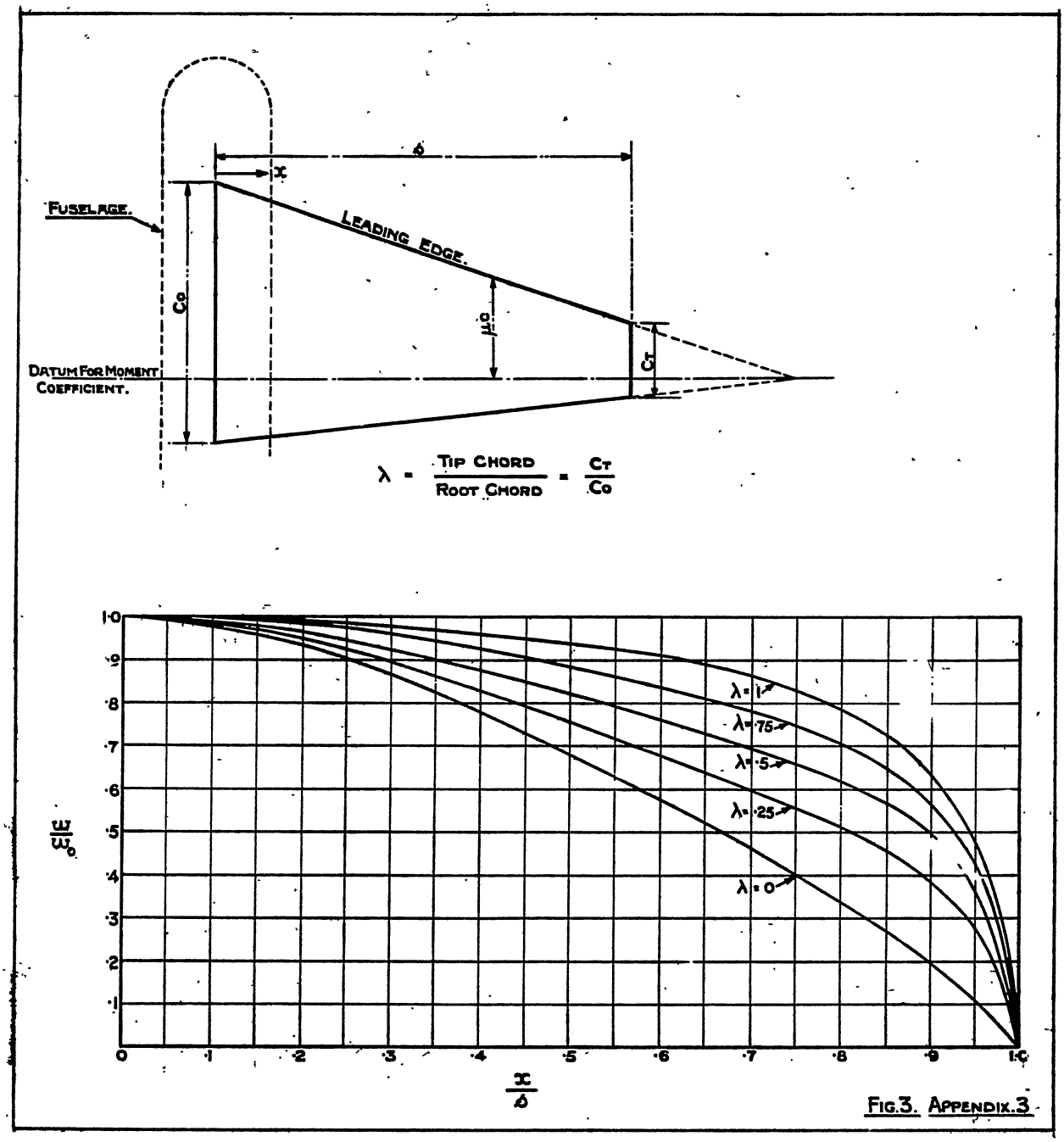

FIG.3. APPENDIX.3

LOAD DISTRIBUTION CURVES FOR CONSTANT x/b - [ASPECT RATIO 6 AND $\frac{da_L}{d\alpha} = \pi$]

x = DISTANCE FROM WING ROOT
b = SEMI-SPAN.

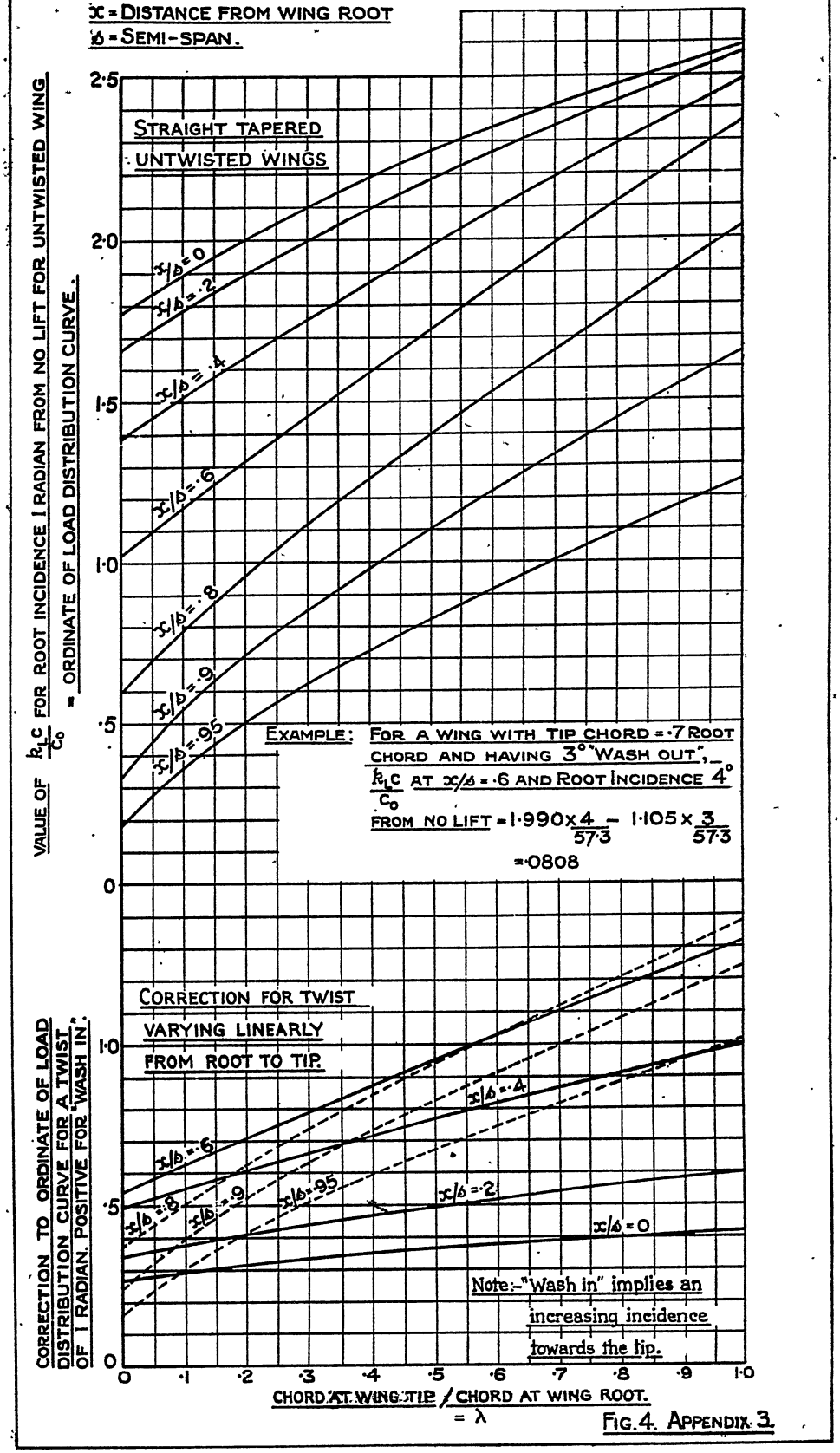

FIG. 4. APPENDIX 3.

TWISTED WING.

DIAGRAM TO ILLUSTRATE METHOD OF DETERMINING THE INCIDENCE OF ANY SECTION FROM NO LIFT (α) WHEN THE ROOT SECTION IS AT NO LIFT ($\alpha_0 = 0$)

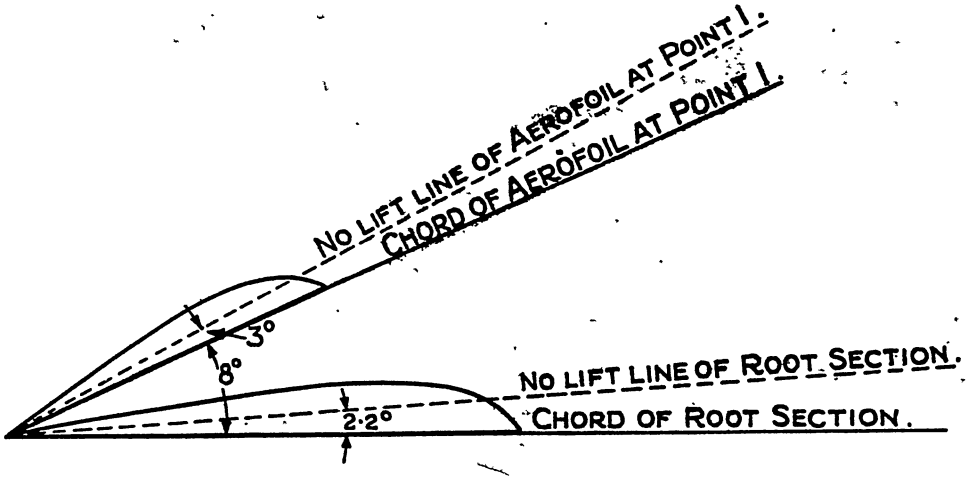

THE "NO LIFT LINE" GIVES THE DIRECTION OF THE WIND FOR ZERO LIFT.

	SECTION 1	2	3	4 ROOT.
ANGLE BETWEEN CHORD OF SECTION AND CHORD OF CENTRE SECTION. POSITIVE WHEN ROOT CHORD IS AT LESS INCIDENCE THAN THE CHORD OF THE SECTION CONCERNED.	+ 8°			0
NO LIFT ANGLE OF SECTION.	−3°			−2·2°
INCIDENCE OF SECTION (MEASURED FROM ITS OWN NO LIFT LINE) WHEN THE ROOT SECTION IS AT NO LIFT; I.E. ANGLE BETWEEN THE NO LIFT LINES OF THE SECTION CONCERNED AND THE ROOT SECTION.	8°+3°−2·2° = 8·8°			0
IN RADIANS.	$\alpha_1 = .1535$	$\alpha_2 =$	$\alpha_3 =$	$\alpha_4 = \alpha_0 = 0$

FIG.5. APPEND.3.

Fig. 3 only gives the shapes of the curves. The curves of figs. 3 and 4 are calculated for a wing of aspect ratio of 6 and $\frac{dk_L}{d\alpha} = \pi$. The effect of small changes in these quantities may be ignored.

The load grading curve for a rectangular wing ($\lambda = 1$) should only be used for monoplanes. For a rectangular wing biplane the load distribution is assumed to be uniform from the centre line of the aircraft to a point distant $1 \cdot 2c$ from the wing tip, the loading falling away at the wing tip according to the curve given in chapter F, section I, fig. 1.

(iv) *Straight tapered twisted wings in which the twist varies linearly along the span.*—It may sometimes happen that the twist of a straight tapered wing at any point along the span is a linear function of the distance of that point from the wing root. A tabular method for determining the aerodynamic twist at points along the wing is given in fig. 5, and linear distribution of twist is indicated by α_1, α_2, α_3, and α_4 being proportional to the distances of sections 1, 2, 3 and 4 from the wing root. The load distribution curve for such a wing can be obtained directly from fig. 4, the curves on the lower portion of the diagram giving the correction to be applied to the ordinates of the loading curve of an untwisted wing given in the upper part of the diagram. This correction must be multiplied by the twist appropriate to the wing under consideration, as shown in the example given on the figure. It will be seen at once from this construction that the shape of the curve varies with incidence, since a constant quantity, representing the correction due to twist, is added to a quantity which is a function of the incidence.

(v) *General case of a curved tapered untwisted wing.*—The load distribution curve for this type of wing should be calculated as explained below. The possible variations in plan form are too large for it to be feasible to give generalised curves. The method is as follows :—

(*a*) Choose four points along the span of the wing such that the characteristics of the aerofoils at these points are known. An arithmetical simplification is obtained by taking the points given in table I.

TABLE I

Point.	$\frac{x}{s}$	chord, c	a (*see* para. 2).	$\frac{ac}{4s} = u$
4	0			$u_4 =$
3	·3827			$u_3 =$
2	·7071			$u_2 =$
1	·9239			$u_1 =$

and it will be assumed to begin with that the wing characteristics at these points are known. Methods are given in sub-para. (vii) for dealing with any four points, and in sub-para. (viii) for taking into account a greater number of points than four.

(*b*) Determine the characteristics of the aerofoils forming the wing at the points given in table I, and fill in the table.

(*c*) Insert the values of u calculated in table I into the following four simultaneous equations, taking α_4 (and hence α_1, α_2 and α_3) equal to 1 :—

$$(0 \cdot 3827 + u_1) A_1 + 2 \cdot 414 (0 \cdot 3827 + 3u_1) A_3 + 2 \cdot 414 (0 \cdot 3827 + 5u_1) A_5 + (0 \cdot 3827 + 7u_1) A_7 = u_1 \alpha_1 \quad \ldots \quad (1)$$

$$(0 \cdot 7071 + u_2) A_1 + (0 \cdot 7071 + 3u_2) A_3 - (0 \cdot 7071 + 5u_2) A_5 - (0 \cdot 7071 + 7u_2) A_7 = u_2 \alpha_2 \quad \ldots \quad (2)$$

$$(0 \cdot 9239 + u_3) A_1 - 0 \cdot 4142 (0 \cdot 9239 + 3u_3) A_3 - 0 \cdot 4142 (0 \cdot 9239 + 5u_3) A_5 + (0 \cdot 9239 + 7u_3) A_7 = u_3 \alpha_3 \quad \ldots \quad (3)$$

AP 970 Design Requirements for Aeroplanes AL25-37-19460801.OCR.pdf

$$(1+u_1)A_1-(1+3u_3)A_3+(1+5u_5)A_5-(1+7u_7)A_7=u_4\alpha_4 \quad \ldots \quad (4)$$

Solve these equations for A_1, A_3, A_5 and A_7. A convenient tabular method of solution is given in table V at the end of this chapter. Columns 6 and 7 in this table refer only to twisted wings. The load distribution curve over the span is given by the equation :—

$$\frac{k_L c}{4s}=A_1\sin\theta+A_3\sin 3\theta+A_5\sin 5\theta+A_7\sin 7\theta \quad \ldots \quad (5)$$

and can be drawn out by giving a number of values to θ corresponding to various points along the span. Values of $\sin n\theta$ at seven points along the span are given below.

TABLE II

x/s	θ	$\sin\theta$	$\sin 3\theta$	$\sin 5\theta$	$\sin 7\theta$
0	90°	1·0	—1·0	1·0	—1·0
0·2	78° 28′	·9798	—·8231	—·5348	—·161
0·4	66° 25′	·9164	—·3307	—·4624	·9663
0·6	53° 08′	·8001	·3518	—·9971	·2068
0·8	36° 52′	·60	·9360	—·0756	—·9783
0·9	25° 51′	·4361	·9765	·7853	—·017
0·95	18° 12′	·3123	·8151	·9998	·7945
1·0	0	0	0	0	0

(*d*) The load distribution curve corresponding to equation (5) can be converted into a curve of k_L by multiplying the ordinates by $\frac{4s}{c}$, c having the value appropriate to each individual point considered. The value so obtained will correspond to an angle of incidence of one radian from no lift. k_L is directly proportional to incidence, so that its value for any given angle is easily calculated. The centre of pressure position at each point along the span can then be calculated from the known relation between lift coefficient and centre of pressure as given by standard wind tunnel tests on rectangular aerofoils, and hence the spar loading curves can be obtained.

(*e*) The shape of the wing loading curve is the same for all angles of incidence, the scale alone varying. The mean lift coefficient is dependent upon A_1 only and is given by the expression

$$\bar{k}_L=\frac{2\pi s^2}{S}A_1 \quad \ldots \quad (6)$$

The value of A_1 for a straight tapered untwisted wing can be obtained from fig. 6 by putting $\phi=0$. This mean lift coefficient applies to the assumed wing which extends to the centre line of the aeroplane. The correction to $\bar{k}_L$ to allow for the centre (fuselage) portion of the wing is given in para. 3 (ix).

(vi) *General case of curved tapered twisted wing.*—The shape of the load distribution curve for a twisted wing varies with incidence and hence it is necessary to calculate values of A_1, A_3, A_5 and A_7 for more than one value of root incidence. The work is conveniently arranged as follows :—

(*a*) Using the same four standard points as for an untwisted wing, insert appropriate values in table III for the wing characteristics at each point and work out values of u and $u\alpha$, taking three different values of α_0.

AP 970 Design Requirements for Aeroplanes AL25-32 19460801 OCR.pdf Page 84 of 114

AP 970 Design Requirements for Aeroplanes At125-37 19460801 OCR.pdf

VALUE OF A_1 FOR STRAIGHT TAPERED WING WITH LINEAR DISTRIBUTION OF TWIST.

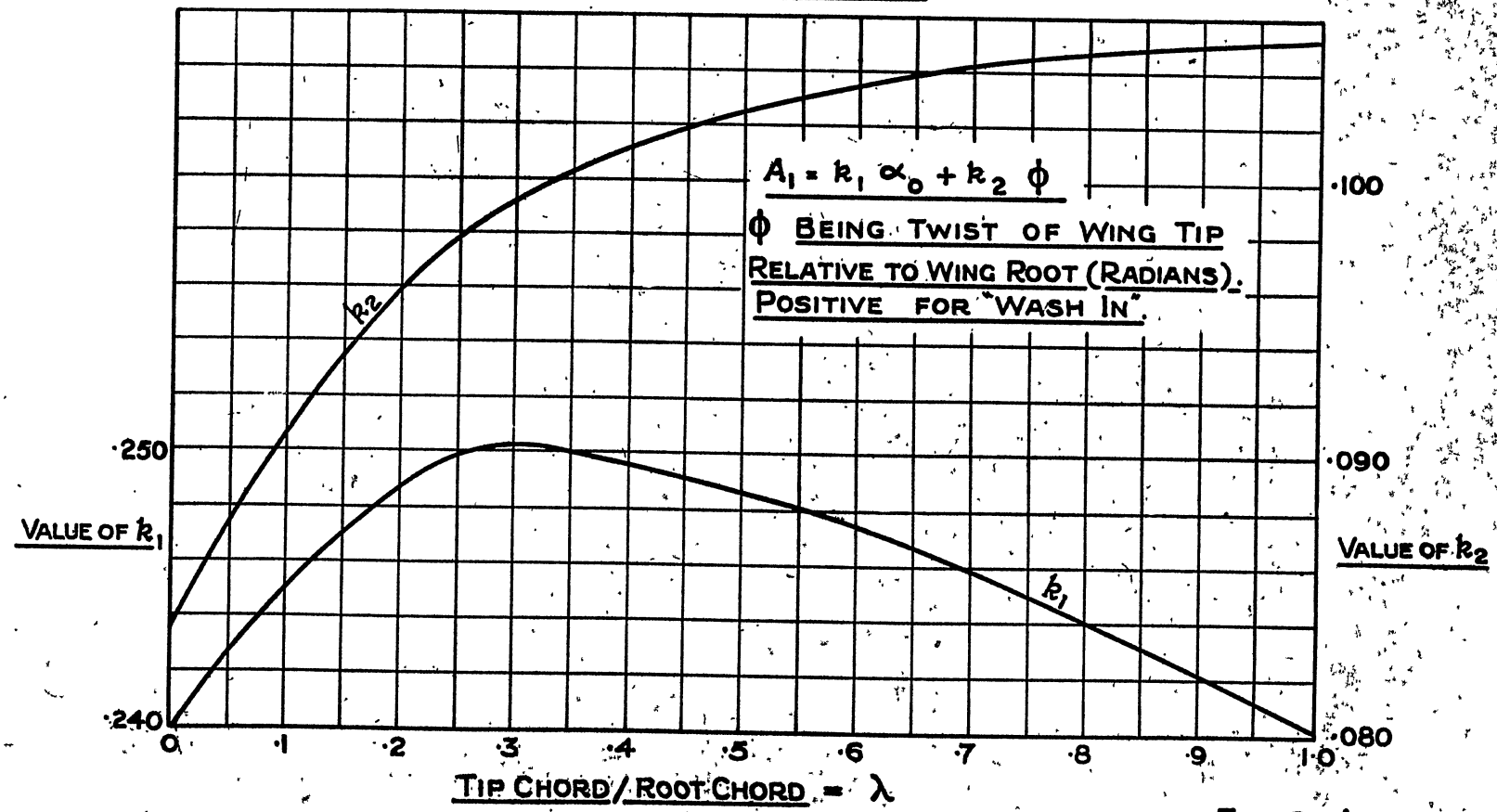

Fig. 6 APPENDIX 3

TABLE III

Point.	$\frac{x}{s}$	Incidence from no-lift in radians when $\alpha_0 = 0$	Chord c	a (see para. 2)	$\frac{ac}{4s} = u$	$u\alpha$ (α in radians)		
						$\alpha_0 = 0$	$\alpha_0 = \cdot5$	$\alpha_0 = 1\cdot0$
4	0	$\alpha_4 = \alpha_0 = 0$			$u_4 =$	$u_4\,\alpha_4 =$		
3	·3827	$\alpha_3 =$ } See			$u_3 =$	$u_3\,\alpha_3 =$		
2	·7071	$\alpha_2 =$ } Fig.			$u_2 =$	$u_2\,\alpha_2 =$		
1	·9239	$\alpha_1 =$ } 5			$u_1 =$	$u_1\,\alpha_1 =$		

(*b*) Insert these values of u and $u\alpha$ into equations (1) to (4). This will give three sets of four simultaneous equations, since there are three values of $u\,\alpha$ corresponding to three different root incidences at each point. These three sets of equations can be solved as shown in the numerical example given in para. 6 with little more labour than is involved in solving one set. The values of A_1, A_3, A_5 and A_7 should be linear functions of the root incidence, and hence the three values of α_0 taken above give a partial check upon the work.

(*c*) Express these constants in terms of α_0 :—

$$\left.\begin{aligned} A_1 &= h_1\,\alpha_0 + h_2 \\ A_3 &= h_3\,\alpha_0 + h_4 \\ A_5 &= h_5\,\alpha_0 + h_6 \\ A_7 &= h_7\,\alpha_0 + h_8 \end{aligned}\right\} \quad \ldots\ \ldots\ \ldots\ \ldots\ \ldots\ \ldots\ \ldots \quad (7)$$

α_0 being in radians.

(*d*) To draw the load distribution curves representing stalling, maximum speed, fast glide and terminal velocity dive conditions, calculate the mean lift coefficients (based upon the true wing area, *i.e.*, the $\bar{k}_L$ of para. 3 (ix)) corresponding to these speeds, and hence determine the root incidence for each case from the relation

$$\bar{k}_L = \frac{2\pi s^2}{S}(h_1\,\alpha_0 + h_2) \quad \ldots\ \ldots\ \ldots\ \ldots\ \ldots\ \ldots\ \ldots \quad (8)$$

The connection between the mean lift coefficient on the true wing area, $\bar{k}'_L$, and $\bar{k}_L$ is given in para. 3 (ix).

(*e*) Knowing α_0, the values of A_1, A_3, A_5, and A_7, are found from equation (7), and inserting these values in equation (5) gives the load distribution curve.

(vii) *Aerofoil characteristics not known at the four standard points.*—In the case of a wing the aerofoil section of which varies along the span, it may not always be convenient to take the four standard points given in tables I and III. Four other points may be taken if desired, at distances x_1, x_2, x_3 and x_4 from the wing root, where

$$\frac{x_1}{s} = \cos\,\theta_1$$

$$\frac{x_2}{s} = \cos\,\theta_2 \qquad \text{etc.}$$

The four equations (1) to (4) must then be replaced by the following :—

$$\sin\theta_1 (\sin\theta_1 + u_1) A_1 + \sin 3\theta_1 (\sin\theta_1 + 3u_1) A_3 + \sin 5\theta_1 (\sin\theta_1 + 5u_1) A_5 + \sin 7\theta_1 (\sin\theta_1 + 7u_1) A_7 = u_1 \alpha_1 \sin\theta_1 \quad \ldots \quad (9)$$

$$\sin\theta_2 (\sin\theta_2 + u_2) A_1 + \sin 3\theta_2 (\sin\theta_2 + 3u_2) A_3 + \sin 5\theta_2 (\sin\theta_2 + 5u_2) A_5 + \sin 7\theta_2 (\sin\theta_2 + 7u_2) A_7 = u_2 \alpha_2 \sin\theta_2 \quad \ldots \quad (10)$$

$$\sin\theta_3 (\sin\theta_3 + u_3) A_1 + \sin 3\theta_3 (\sin\theta_3 + 3u_3) A_3 + \sin 5\theta_3 (\sin\theta_3 + 5u_3) A_5 + \sin 7\theta_3 (\sin\theta_3 + 7u_3) A_7 = u_3 \alpha_3 \sin\theta_3 \quad \ldots \quad (11)$$

$$\sin\theta_4 (\sin\theta_4 + u_4) A_1 + \sin 3\theta_4 (\sin\theta_4 + 3u_4) A_3 + \sin 5\theta_4 (\sin\theta_4 + 5u_4) A_5 + \sin 7\theta_4 (\sin\theta_4 + 7u_4) A_7 = u_4 \alpha_4 \sin\theta_4 \quad \ldots \quad (12)$$

In choosing the positions of the four points it is advisable to arrange for them to be more closely grouped towards the tip of the wing, as the loading curve is varying more rapidly in this region.

(viii) *Aerofoil characteristics known at more than four points along the span.*—A method is described below for taking into account the aerofoil characteristics at more than four points along the span of the wing, without retaining more than four terms of the Fourier's series of equations (9) to (12).

If more terms in the series were to be retained no theoretical difficulty would arise; thus, if five points in the wing were considered, and the first five terms of the series retained, this would lead to five unknowns ($A_1 - A_9$) with five simultaneous equations for their determination. This method, however, soon becomes unmanageable, owing to the difficulty of solving a large number of simultaneous equations of this type with sufficient arithmetical accuracy. The labour involved is, in addition, usually unnecessary, as for most tapered wings the fifth and subsequent terms of the series have a negligible effect upon the shape of the load distribution curve. A type of wing in which these higher terms may be of importance is one in which the maximum chord is not at the wing root. In such a case sufficient terms should be calculated to ensure that subsequent terms may safely be ignored.

Dealing with a normal wing, in which the first four terms only need be considered, a method of taking into account more than four points on the wing is as follows. Suppose that ten points along the wing are taken, leading to ten equations of the type (9) to (12). These equations can be written in tabular form thus :—

A_1	A_3	A_5	A_7	
a_1	b_1	c_1	d_1	$= e_1$
a_2	b_2	c_2	d_2	$= e_2$
—	—	—	—	= —
—	—	—	—	= —
a_{10}	b_{10}	c_{10}	d_{10}	$= e_{10}$

Then by the method of least squares the best values of A_1, A_3, A_5 and A_7 are defined by the four simultaneous equations :—

A_1	A_3	A_5	A_7	
(aa)	(ab)	(ac)	(ad)	$= (ae)$
(ab)	(bb)	(bc)	(bd)	$= (be)$
(ac)	(bc)	(cc)	(cd)	$= (ce)$
(ad)	(bd)	(cd)	(dd)	$= (de)$

where the brackets indicate "the sum of all such terms," *i.e.*, $(ab) = a_1b_1 + a_2b_2 + a_3b_3 + \ldots\ldots + a_{10}b_{10}$. The majority of the summation terms in these equations are repeated once, thus reducing the labour of calculation.

This method can be generalised by replacing sums by integrals. Thus the summations (aa) (ab), etc., can be obtained by plotting the values of aa, ab, etc., along the span, and measuring the area enclosed by these curves by planimeter.

(ix) *Effect of fuselage on lift of wing.*—In the calculations described above the assumption has been made that the wing extends to the centre line of the aeroplane. In practice the centre part of the wing will be replaced by the body of the aeroplane, and hence the lift as calculated above will exceed the true lift by an amount equal to that taken by this non-existent central portion of the wing.

This discrepancy will not affect the shape of the load distribution curve, and hence in the case of untwisted wings no complication arises. That portion of the load distribution curve between the wing tip and the point at which the wing merges into the fuselage is all that is required for strength calculations, the scale being fixed by the consideration that the area under the load distribution curve must represent the known lift of the wing.

In the case of a twisted wing, however, where the load distribution curve varies with incidence, it is necessary to determine what root incidences will correspond to the various conditions of flight for which strength calculations are made. Hence the relation between $\bar{k}_L$ and $\bar{k}_L'$ is required, where $\bar{k}_L$ is as defined in para. 2 and $\bar{k}_L'$ is the mean lift coefficient over the actual wing (*i.e.*, as terminated by the fuselage) based upon the true wing-area.

This relation is given approximately by the following expression :—

$$\bar{k}_L' = \bar{k}_L\left\{1 - \frac{S_1}{S - S_1}\left(\frac{4}{\pi} - 1\right)\right\} \quad \ldots \quad \ldots \quad \ldots \quad \ldots \quad \ldots \quad \ldots \quad \ldots \quad (13)$$

where S_1 is the amount by which the area of the assumed wing S exceeds the area of the actual wing. The approximations involved in the above formulæ are :—

(1) That for the assumed wing under consideration the ratio of the k_L on the centre line of the aeroplane to $\bar{k}_L$ is the same as for an elliptically tapered wing, and

(2) That on the assumed wing this centre k_L acts over the centre area S_1.

4. Drag coefficient.—(i) *Distribution of drag along the span.*—The wing drag coefficient at each point along the span is the sum of the induced drag, k_{D_1}, and the profile drag, k_{D_0}. The induced drag at the point $x/s = \cos\theta$ is given by the expression

$$\frac{k_{D_1}c}{4s} = \left\{\frac{k_Lc}{4s}\right\}\frac{1}{\sin\theta}\left\{A_1\sin\theta + 3A_3\sin 3\theta + 5A_5\sin 5\theta + 7A_7\sin 7\theta\right\} \quad \ldots \quad (14)$$

where $\frac{k_Lc}{4s}$ has the value already calculated in equation (5).

(ii) Values of A_1, A_3, A_5 and A_7 for a straight tapered untwisted wing, corresponding to an angle of incidence of 1 radian from no-lift, are given below.

λ	A_1	A_3	A_5	A_7
0	·240	— ·051	·002	— ·005
·25	·250	— ·012	·010	— ·002
·50	·249	·007	·010	— ·001
·75	·245	·020	·008	0
1·0	·240	·029	·006	·001

(iii) For strength calculations it will usually be sufficiently accurate to take the profile drag coefficient for most aerofoils in common use as a constant, $k_{D_0} = .006$. Strictly speaking, k_{D_0} should vary at each section with the aerofoil and the angle of incidence of the section, but for strength calculations this variation may usually be ignored and the above mean value assumed.

(iv) The wing drag at any point along the span is given by $D = (k_{D_0} + k_{D_1})\, c\rho\, V^2$ lb. per unit length along the span, and hence a drag load distribution curve can be drawn out as has been done in the case of the lift load.

5. Moment coefficient.—(i) *General.*—Let

k_m = moment coefficient of any section referred to its leading edge.

$\bar{k}_m$ = mean moment coefficient of wing referred to the datum line (*see* below).

$$= \frac{M}{Sc_0\, \rho\, V^2}$$

μc = distance between the datum and the leading edge at any point, positive when the datum is behind the leading edge.

e and b are constants such that

$$k_m = ek_L + b.$$

e and b can be taken from wind tunnel tests on wings of finite aspect ratio.

A datum line is chosen arbitrarily. For the general wing the perpendicular to the line of symmetry through the leading edge of the root section is most convenient. For straight tapered wings it is convenient to choose the perpendicular which passes through the intersection of the leading and trailing edges produced, as for this datum μ is constant.

The mean moment coefficient of a tapered wing is given (neglecting the contribution of k_D) by the definite integral.

$$\bar{k}_m = \frac{2}{Sc_0}\int_0^s (k_m + \mu k_L)\, c^2\, dx \qquad (15)$$

$$\text{or } \bar{k}_m = \frac{2}{Sc_0}\int_0^s \left\{(e + \mu)\, k_L + b\right\} c^2\, dx \qquad (16)$$

The evaluation of this integral for the various types of tapered wing is dealt with in the subsequent paragraphs.

As in the case of the lift coefficient, the moment coefficient $\bar{k}_m$ will refer to the assumed wing (*see* para. 2). The correct coefficient for the actual wing, $\bar{k}_{m'}$ is related to $\bar{k}_m$ by the formula:

$$\bar{k}'_m = \bar{k}_m \left(1 + \frac{S_1}{S - S_1}\right) - \left\{b + (e + \mu)\frac{4}{\pi}\bar{k}_L\right\}\frac{S_1}{S - S_1} \qquad (17)$$

Here e and b have the values appropriate to the root section, *i.e.*, the section on the centre line of the aeroplane. This expression involves the same assumptions as already made in the case of the lift coefficient (*see* para. 3 (ix) (*d*)).

(ii) *Straight tapered untwisted wing.*—For this type of wing a datum is again chosen so that μ is constant (*see* sub-para. (i)). Curves are given in fig. 7 from which the moment coefficient for a straight tapered untwisted wing can be obtained directly. These curves are based upon the following assumptions:—

(1) The moment coefficient of the aerofoil forming the wing is a linear function of the lift coefficient.

(2) The aspect ratio, A, is 6. The aspect ratio appears in the expression for $\bar{k}_m$ given in fig. 7 only in order to define the geometry of the wing (in place of using the semi-span).

MOMENT COEFFICIENT OF UNTWISTED STRAIGHT TAPERED WINGS.

$$\bar{k}_m = [(e+\mu)(1-Af_1(\lambda))]\ \bar{k}_L + bf_2(\lambda)$$

MOMENT IS REFERRED TO THE INTERSECTIONS OF THE LEADING AND TRAILING EDGES. (SEE FIG. 1.)

A = ASPECT RATIO

$e = \dfrac{d\,k_m}{d\,k_L}$ FOR THE SECTION

$b = k_m$ AT NO LIFT OF THE SECTION.

μ = SEE FIG. 1.

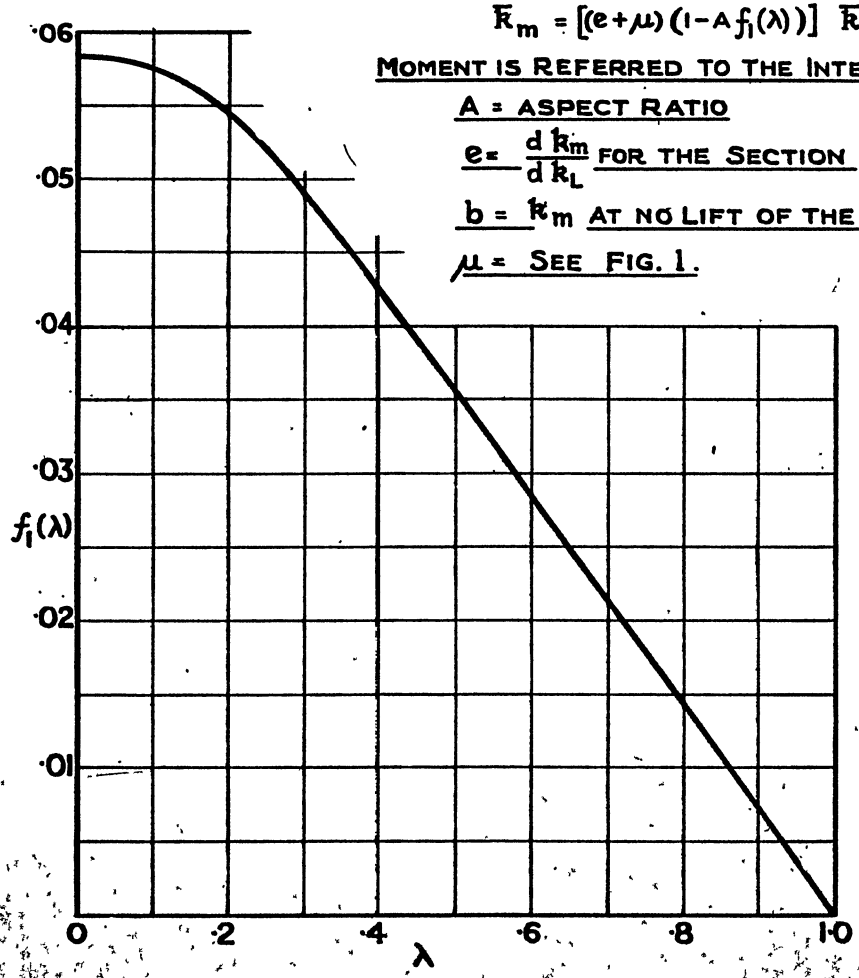

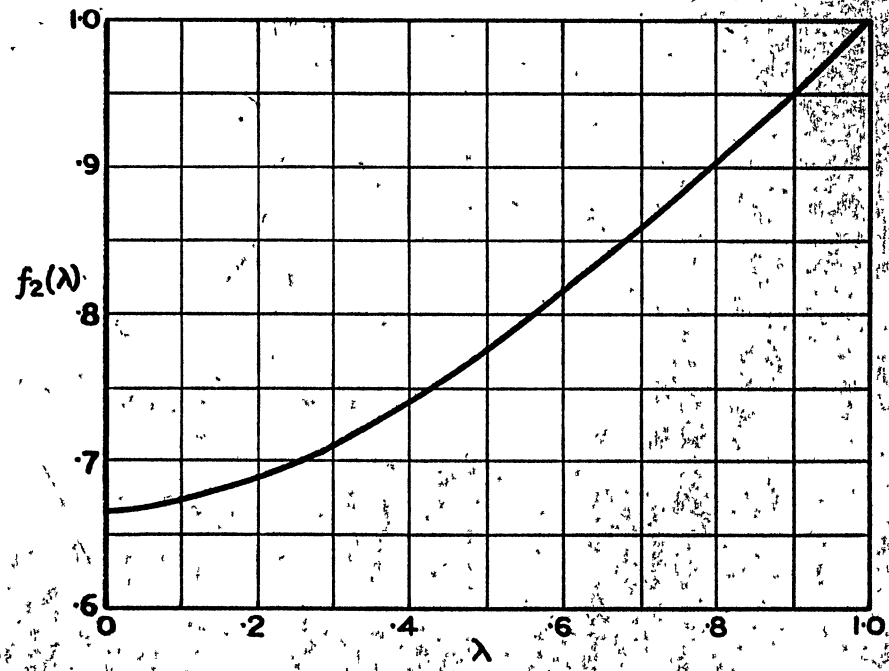

FIG. 7. APPEND. 3

AP 970 Design Requirements for Aeroplanes AL25-37 19460801 OCR.pdf

Calculations on aspect ratios 6 and 8 have indicated that the shape of the load distribution curve is not greatly affected by small changes in aspect ratio, and hence the curves given will apply to the majority of wings met with in practice.

(3) The shape of the load distribution curves for different values of λ is as given in fig. 3.

These curves (fig. 7) give $\bar{k}_m$ in terms of $\bar{k}_L$, and hence, by equation (6), in terms of A_1. A_1 is a linear function of α_0, given for a straight tapered wing in fig. 6, and hence $\bar{k}_m$ can be expressed as a linear function of α_0 (α_0 in fig. 6 is in radians). In determining the tail load it must be remembered that $\bar{k}_m$ as calculated above is referred to the datum chosen and not to the leading edge, and that the chord c_0 is as defined in para. 2.

(iii) *Curved tapered untwisted wing.*—The loading curve obtained as described in para. 3 (v) is a curve of $\frac{k_{LC}}{4s}$ along the span corresponding to an incidence of one radian from no-lift. From this curve another curve representing $(e + \mu)\, k_{LC}^2$ can be constructed, and integrating this curve graphically will give the first term of equation (16). This value will correspond to $\alpha_0 = 57{\cdot}3°$, and since this term is directly proportional to the incidence it can be expressed in terms of α_0 (in degrees) by dividing by 57·3.

The second term, $\int_0^s bc^2 dx$, can be integrated either graphically or analytically according to the shape of the wing, and hence the moment coefficient can be expressed in the form

$$\bar{k}_m = K_1\, \alpha_0 + K_2 \quad .. \quad .. \quad .. \quad .. \quad .. \quad .. \quad .. \quad .. \quad .. \quad (18)$$

(iv) *Straight and curved tapered twisted wings.*—Inserting the values of A_1, A_3, A_5, A_7, given by equation (7) in equation (5), at the four standard points, will lead to the following equations :—

Point No. 1

$$\frac{k_{LC}}{4s} = {\cdot}3827\,(h_1 + h_7)\,\alpha_0 + {\cdot}9239\,(h_3 + h_5)\,\alpha_0 + {\cdot}3827(h_2 + h_8) + {\cdot}9239\,(h_4 + h_6)$$

Point No. 2

$$\frac{k_{LC}}{4s} = {\cdot}7071\,(h_1 + h_3 - h_5 - h_7)\,\alpha_0 + {\cdot}7071\,(h_2 + h_4 - h_6 - h_8)$$

Point No. 3

$$\frac{k_{LC}}{4s} = {\cdot}9239\,(h_1 + h_7)\,\alpha_0 - {\cdot}3827\,(h_3 + h_5)\,\alpha_0 + {\cdot}9239\,(h_2 + h_8) - {\cdot}3827\,(h_4 + h_6)$$

Point No. 4

$$\frac{k_{LC}}{4s} = (h_1 - h_3 + h_5 - h_7)\,\alpha_0 + (h_2 - h_4 + h_6 - h_8) \quad .. \quad .. \quad .. \quad .. \quad (19)$$

k_{LC} is now represented at four points along the span as the sum of two curves, one in terms of α_0 and one independent of α. Hence $(e + \mu)\, k_{LC}^2$ will be represented by two similar curves, the areas of which will give $\int_0^s (e + \mu)\, k_{LC}^2 dx$ in the form of equation (18). To this integral must be added the term $\int_0^s bc^2 dx$ which is independent of α_0 and contributes to the constant term K_2. The final expression for $\bar{k}_m$ will be in the form of equation (18).

6. Numerical example.—(i) A typical numerical example is given below to illustrate a convenient tabular method of solution and to indicate the magnitude of the constants involved. In the case of a wing with maximum chord not at the root the terms A_3, A_5 and A_7, will probably be larger in comparison with A_1 than in the case given. The example has not been carried further

than the determination of A_1, A_3, A_5, and A_7, the work from this point onwards being quite straightforward. The particulars of the twisted wing dealt with are given in table IV (in the form of table III, para. 3 (vi)).

TABLE IV

Point.	$\frac{x}{s}$	Incidence from no-lift in radians when $\alpha_0 = 0$	Chord c	a (see para 2).	$\frac{ac}{4s} = u$	$u\alpha$ (α in radians) $\alpha_0 = 0$	$\alpha_0 = \cdot5$	$\alpha_0 = 1\cdot0$
4	0	$\alpha_4 = \alpha_0 = 0$	10 ft.	3·142	·2990	$u_4\alpha_4 = 0$	·1495	·2990
3	·3827	$\alpha_3 = -\cdot0334$	9·043	3·142	·2702	$u_3\alpha_3 = -\cdot009025$	·12607	·26117
2	·7071	$\alpha_2 = -\cdot0617$	8·233	3·142	·2460	$u_2\alpha_2 = -\cdot01518$	·10782	·23082
1	·9239	$\alpha_1 = -\cdot0806$	7·690	3·142	·2300	$u_1\alpha_1 = -\cdot01854$	·09646	·21146

(ii) Putting the above values of u and $u\alpha$ into equations (1) to (4) gives the following three sets of four simultaneous equations :—

$$\begin{aligned}
\cdot6127\,A_1 + 2\cdot5900\,A_3 + 3\cdot7010\,A_5 + 1\cdot9927\,A_7 &= -\cdot01854 \quad \text{I.}\\
\cdot9531\,A_1 + 1\cdot4451\,A_3 - 1\cdot9371\,A_5 - 2\cdot4291\,A_7 &= -\cdot01518 \quad \text{II.}\\
1\cdot1941\,A_1 - \cdot7185\,A_3 - \cdot9425\,A_5 + 2\cdot8153\,A_7 &= -\cdot009025 \quad \text{III.}\\
1\cdot2990\,A_1 - 1\cdot8970\,A_3 + 2\cdot4950\,A_5 - 3\cdot0930\,A_7 &= 0 \quad \text{IV.}\\
\cdot6127\,A_1 + 2\cdot5900\,A_3 + 3\cdot7010\,A_5 + 1\cdot9927\,A_7 &= \cdot09646 \quad \text{V.}\\
\cdot9531\,A_1 + 1\cdot4451\,A_3 - 1\cdot9371\,A_5 - 2\cdot4291\,A_7 &= \cdot10782 \quad \text{VI.}\\
1\cdot1941\,A_1 - \cdot7185\,A_3 - \cdot9425\,A_5 + 2\cdot8153\,A_7 &= \cdot12607 \quad \text{VII.}\\
1\cdot2990\,A_1 - 1\cdot8970\,A_3 + 2\cdot4950\,A_5 - 3\cdot0930\,A_7 &= \cdot1495 \quad \text{VIII.}\\
\cdot6127\,A_1 + 2\cdot5900\,A_3 + 3\cdot7010\,A_5 + 1\cdot9927\,A_7 &= \cdot21146 \quad \text{IX.}\\
\cdot9531\,A_1 + 1\cdot4451\,A_3 - 1\cdot9371\,A_5 - 2\cdot4291\,A_7 &= \cdot23082 \quad \text{X.}\\
1\cdot1941\,A_1 - \cdot7185\,A_3 - \cdot9425\,A_5 + 2\cdot8153\,A_7 &= \cdot26117 \quad \text{XI.}\\
1\cdot2990\,A_1 - 1\cdot8970\,A_3 + 2\cdot4950\,A_5 - 3\cdot0930\,A_7 &= \cdot2990 \quad \text{XII.}
\end{aligned}$$

(iii) It will be seen that these three sets only differ from each other in the terms on the right-hand side. A convenient way of solving these three sets together is shown in table V.

To make the explanation of the table clear, neglect to begin with the figures printed in italics. The remaining figures in columns 2, 3, 4 and 5 are then the coefficients of A_1, A_3, A_5 and A_7 respectively, as given at the head of each column. Column 6 contains the terms on the right-hand side of equations I to IV ; column 7 the terms on the right-hand side of equations V to VIII ; and column 8 the terms on the right-hand side of equations IX to XII.

Equation I is written down at the head of the table (line 1) and the appropriate values from equations V and IX are written in columns 7 and 8. Equations II, III, and IV are written down in a similar way, several lines being left between each equation (equation II on line 23, III on line 42, and IV on line 55). Each equation is then divided through by the coefficient of A_1, giving equations IA, IIA, IIIA and IVA (lines 2, 24, 43 and 56). These are subtracted from one another as shown in column 1. In choosing which two equations to use together it is advisable to avoid equations which have the two coefficients of the same unknown nearly equal, as otherwise the solution may become arithmetically indeterminate.

The three equations given as a result of the subtractions are shown on lines 7, 29 and 48, and bringing the coefficients of A_3 to unity gives the three "B" equations, lines 8, 30 and 49.

This process is repeated, giving two "C" equations (lines 14 and 36) and one "D" equation (line 20), this latter equation giving the numerical value of A_7 when $\alpha_0 = 0$, ·5 and 1·0. It is advisable to check at this point that A_7 is a linear function of α_0.

The figures in italics refer to the calculation of A_5, A_3 and A_1.

Since A_7 is known, A_5 can be determined from equation Ic (line 14). Under the coefficient of A_7 in equation Ic (— 1·170) write its values when A_7 has the values corresponding to $\alpha_0 = 0$, ·5 and 1·0. A_5 is then determined by subtracting in turn the numerical values of A_7 from the terms in columns 6, 7 and 8. As a check upon the work determine A_5 in a similar way from equation IIc (line 36) and take the mean of the two values thus found for each of the three values of α_0.

Similarly three determinations of A_3 can be made from equations IB, IIB and IIIB (lines 8, 30 and 49) and four determinations of A_1 from equation IA, IIA, IIIA and IVA (lines 2, 24, 43, 56). It is advisable to calculate these in every case and to take the mean, as it gives a valuable check on the arithmetic and tends to reduce discrepancies due to small sliderule errors.

The mean of the values calculated in table V are as follows :—

	A_1	A_3	A_5	A_7
$\alpha_0 = 0$	—·00914	—·00498	·000277	—·000536
$\alpha_0 = ·5$	·1130	·00488	·000421	—·000487
$\alpha_0 = 1·0$	·2351	·01475	·00815	—·000442

and hence equations (7) para. 3 (vi) (*c*) are as follows :—

$$A_1 = ·2442\alpha_0 - ·00914$$
$$A_3 = ·01973\alpha_0 - ·00498$$
$$A_5 = ·007873\alpha_0 + ·000277$$
$$A_7 = ·000094\alpha_0 - ·000536$$

(iv) In the above calculations A_7 has been evaluated first. It will usually be advisable to do this, as the probable error in A_1 is generally of the same order of magnitude as A_7, so that if the latter is made to depend upon the accuracy of the calculation of A_1 erratic results will probably be obtained.

TABLE V

	1	2	3	4	5	6	7	8
						Right Hand Side of Equation when $\alpha_0 =$		
		A_1	A_3	A_5	A_7	0	5	1·0 radian.
1	I	·6127	2·590	3·701	1·9927	— ·01854	·09646	·21146
2	IA	1	4·2272	6·0405	3·2523	— ·03026	·15743	·34513
3	$\alpha_0 = 0$		— ·02092	·00167	— ·00174	$A_1 =$ — ·00926		
4	$\alpha_0 = ·5$		·02061	·02545	— ·00158	$A_1 =$ ·11296		
5	$\alpha_0 = 1·0$		·06234	·04920	— ·00143	$A_1 =$ ·23502		
6	IVA	1	—1·4603	1·9207	—2·3816	0	·11509	·23018
7	IA—IVA		5·6875	4·1198	5·6339	— ·03026	·04234	·11495
8	IB		1	·7244	·9906	— ·00532	·00744	·02021
9	$\alpha_0 = 0$			·00016	— ·00053	$A_3 =$ — ·00495		
10	$\alpha_0 = ·5$			·00305	— ·00048	$A_3 =$ ·00488		
11	$\alpha_0 = 1·0$			·00590	— ·00044	$A_3 =$ ·01475		
12	IIIB		1	1·4127	·1852	— ·00470	·01073	·02617
13	IIIB—IB			·6883	— ·8054	·00062	·00329	·00596
14	IC			1	—1·170	·000901	·00478	·00866
15	$\alpha_0 = 0$				·00062	$A_5 =$ ·000276		
16	$\alpha_0 = ·5$				·00057	$A_5 =$ ·004213		
17	$\alpha_0 = 1·0$				·00051	$A_5 =$ ·008146		
18	IIC			1	1·2459	— ·000391	·003604	·00760
19	IIC—IC				2·4159	— ·001292	— ·001176	— ·00106
20	ID	Final Equation for A_7			1	— ·000536	— ·000487	— ·000442
21								
22								
23	II	·9531	1·4451	—1·9371	—2·4291	— ·01518	·10782	·23082
24	IIA	1	1·5162	—2·0324	—2·5486	— ·01589	·11314	·24218
25	$\alpha_0 = 0$		— ·00756	— ·00056	·00136	$A_1 =$ — ·00912		
26	$\alpha_0 = ·5$		·00740	— ·00856	·00124	$A_1 =$ ·11304		
27	$\alpha_0 = 1·0$		·02235	— ·01656	·00113	$A_1 =$ ·23525		
28	IA	1	4·2272	6·0405	3·2523	— ·03026	·15743	·34513
29	IA—IIA		2·7110	8·0729	5·8009	— ·01437	·04429	·10295
30	IIB		1	2·9778	2·1398	— ·00531	·01638	·03806
31	$\alpha_0 = 0$			·00082	— ·00115	$A_3 =$ — ·00499		
32	$\alpha_0 = ·5$			·01254	— ·00104	$A_3 =$ ·00488		
33	$\alpha_0 = 1·0$			·02426	— ·00094	$A_3 =$ ·01474		
34	IIIB		1	1·4127	·1852	— ·00470	·01074	·02617
35	IIB—IIIB			1·5651	1·9546	— ·00061	·00564	·01189
36	IIC			1	1·2459	— ·000391	·003604	·00760
37	$\alpha_0 = 0$				— ·00067	$A_5 =$ ·000277		
38	$\alpha_0 = ·5$				— ·00061	$A_5 =$ ·004212		
39	$\alpha_0 = 1·0$				— ·00055	$A_5 =$ ·00815		
40								
41								
42	III	1·1941	— ·7185	— ·9425	2·8153	— ·009025	·12607	·26117
43	IIIA	1	— ·6017	— ·7893	2·3576	— ·00756	·10558	·21872
44	$\alpha_0 = 0$		·00300	— ·00022	— ·00126	$A_1 =$ — ·00908		
45	$\alpha_0 = ·5$		— ·00293	— ·00332	— ·00115	$A_1 =$ ·11299		
46	$\alpha_0 = 1·0$		— ·00887	— ·00643	— ·00104	$A_1 =$ ·23507		
47	IA	1	4·2272	6·0405	3·2523	— ·03026	·15743	·34513
48	IA—IIIA		4·8289	6·8298	·8947	— ·02270	·05185	·12641
49	IIIB		1	1·4127	·1852	— ·00470	·01073	·02617
50	$\alpha_0 = 0$			·00039	— ·00010	$A_3 =$ — ·00499		
51	$\alpha_0 = ·5$			·00595	— ·00009	$A_3 =$ ·00487		
52	$\alpha_0 = 1·0$			·01151	— ·00008	$A_3 =$ ·01475		
53								
54								
55	IV	1·2990	—1·8970	2·4950	—3·093	0	·1495	·2990
56	IVA	1	—1·4603	1·9207	—2·3816	0	·11509	·23018
57	$\alpha_0 = 0$		·00729	·00053	·00128	$A_1 =$ — ·00910		
58	$\alpha_0 = ·5$		— ·00712	·00809	·00116	$A_1 =$ ·11295		
59	$\alpha_0 = 1·0$		— ·02153	·01565	·00105	$A_1 =$ ·23501		

APPENDIX 5

LOAD DISTRIBUTION - TAIL UNIT

Chordwise load distribution

1. The basic chordwise load distribution across any chord to be assumed for tailplanes and elevators, or fins and rudders, is illustrated in Fig.1. The parameters needed in a particular case are:-

(i) p ..... the loading per foot run.
(ii) d ..... the local centre of pressure position, and
(iii) E ..... the local ratio of elevator (or rudder) chord to overall chord.

2. The loading per foot run is obtainable from the spanwise load distribution. The centre of pressure position should be derived from the position of the centre of pressure of the whole tail load on the mean chord in the following manner,-

The position and length of the mean chord are defined in Appendix 1 and the centre of pressure of the load in relation to the mean chord is either known or can be determined (see para.3). The centre of pressure of the load on any section should be taken on the line through the centre of pressure of the whole load at right angles to the axis of symmetry of the aeroplane.

Centre of pressure position for tailplane and elevator load

3. As a method of determining the centre of pressure position the following equations can be used (see Fig.3 and para.14 for notation and definitions),-

$$\alpha' = \alpha + \eta_T + \epsilon \quad \text{..... (1)}$$

$$M_2 = \frac{l\, mc'}{a_2 l + mc'_T} \left(\tfrac{1}{2} a_1 \rho S' V^2 \alpha' - \frac{M_1}{l}\right) \quad \text{..... (2)}$$

$$P = \frac{M_1 + M_2}{l} \quad \text{..... (3)}$$

$$d = 0.25 - \frac{M_2}{Pc'_T} \quad \text{..... (4)}$$

4. Values of parameters.- The values of the various parameters should, if possible, be determined from wind tunnel tests (a method of reduction is given below). In the absence of wind tunnel tests, theoretical values of a_2/a_1 and m should be used (see R.&.M.1095+) and an efficiency factor of 0.8 should be assumed. Appropriate allowance for compressibility effects should be made (see Part 2).

5. Tests have shown that flexibility of the tailplane, elevator, and rear fuselage can alter the load distribution.

+ The values given in R.&.M.1095 must be doubled for use in the equations of para.3.

A

Centre of pressure position for tailplane and elevator load (cont'd)

Where this might have a serious adverse effect it should be fully investigated.

6. Value of ϵ from wind tunnel tests.- ϵ can be determined for a particular main plane incidence by finding the tail setting at which the pitching moment with the tail plane in position would be the same as the pitching moment with no tail.

From equation (1) when $\alpha' = 0$, i.e. no pitching moment from the tailplane,

$$\epsilon = \alpha + \eta_T$$

Calculate $\frac{dC_m}{d\eta_T}$ for the appropriate value of α, say $\alpha = \alpha_1$ (see fig.2)

$$\frac{dC_m}{d\eta_T} = \frac{DE}{\eta_{T_2} - \eta_{T_1}} \quad \text{(this will be negative)}$$

A pitching moment curve through the point F represents the tail setting necessary, when the main plane is at an incidence α_1, to produce no pitching moment from the tail plane

$\therefore$ DF = change in tail setting from η_{T_1} necessary.

$$= \frac{DF}{DE} \times (\eta_{T_2} - \eta_{T_1})$$

$$= \frac{DF}{\frac{dC_m}{d\eta_T}} = \frac{\delta C_m}{\frac{dC_m}{d\eta_T}}$$

$$\therefore \text{nett tail setting} = \eta_{T_1} + \frac{\delta C_m}{\frac{dC_m}{d\eta_T}}$$

$$\therefore \epsilon = \alpha + \eta_T + \frac{\delta C_m}{\frac{dC_m}{d\eta_T}}$$

The method outlined above applies to a tail plane with a symmetrical section. If the aerofoil of the tail plane is not symmetrical, correction must be made for the no-lift angle of the section.

7. Values of a_1 from wind tunnel tests.- a_1 can be deduced from the change of pitching moment due to a change of tail setting with elevators neutral and at a constant main plane incidence.

Centre of pressure position for tailplane and elevator load (cont'd)

For a particular value of α .-

$$a_1 = \frac{dC'_L}{d\eta_T} = \frac{dC_m}{d\eta_T}\left(\frac{cS}{\ell S'}\right)$$

$\frac{dC_m}{d\eta_T}$ has already been found in the determination of ϵ

8. Value of a_2 from wind tunnel tests.- a_2 can be deduced from the change of pitching moment due to a change of elevator angle at a constant tail setting and at a constant main plane incidence.

Calculate $\frac{dC_m}{d\eta}$ (for a constant value of η_T)

From Fig.2 when $\alpha = \alpha_1$, $\frac{dC_m}{d\eta} = \frac{HD}{\eta_1}$

$$a_2 = \frac{dC'_L}{d\eta} = \frac{dC_m}{d\eta}.\left(\frac{cS}{\ell S'}\right) - \frac{c'm}{\ell}$$

or approximately $a_2 = \frac{dC_m}{d\eta}.\left(\frac{cS}{\ell S'}\right)$

The term in which a_2 is involved (i.e. M_2) is of most importance at high speed, where the elevator angle will be small. a_2 should therefore be found from wind tunnel tests with η less than 5° if possible and in any case not greater than 10° . Tests with large elevator angles, e.g. 20° - 25° are unsuitable for this purpose.

9. Check on C.P. position from flight test results.- The centre of pressure position used in design should be checked from the elevator angles to trim as measured during the flight trials of Chapter ~~C17~~ 913 A method to enable a quick check to be made is given in Airworthiness Technical Note No.144.

Special distribution for control surfaces with horn balance

10. When a control surface has a horn balance, the chordwise loading should follow that of Fig.1 but the spanwise loading should be increased by 50% over the sections covered by the horn balance, the spanwise loading elsewhere being proportionately reduced to give the same total load.

Spanwise load distribution on tail units with outboard fins and rudders

11. Tailplane and elevator.- Over the portion of the span between the centre line of the aeroplane and the fin, the spanwise loading should be assumed to vary linearly as shown in Fig.4A. The slope is defined by

$$\frac{AB}{CD} = 1.55 - \frac{h}{b'}$$ (for notation see Fig.4A)

B'

Spanwise load distribution on tail units with outboard fins and rudders (cont'd)

If h/b' is greater than 0.55, the value of h/b' should be taken as 0.55.

12. Over the portion of the span outboard of the fin, the loading should be taken as part of the ellipse with EG and EC as axes (see Fig.4A). The height of EG is defined by

$$\frac{EG}{EF} = (0.7 - 0.5\ \frac{h}{b'})\ \frac{6}{5+K}$$

where $K = h_\ell / h_u$.

13. Fin and rudder.- In symmetric flight the tailplane load induces a lateral load on the fin and rudder in a direction tending to increase the bending moment in the tailplane spars. The distribution vertically over each part of the fin and rudder should be taken as elliptical with axes PQ, PS and PR, PT for the upper and lower portions respectively (see Fig.4B). The induced loads are proportional to the total vertical load on the tailplane, and for the upper and lower portions of one fin the magnitudes of the loads are given respectively by

$$\frac{P_u}{P} = \frac{1.1}{2.7 + K} \cdot \frac{h_u}{b'} - 0.08.(1-K)\ \frac{a}{b'} \quad \ldots\ldots\ldots\ldots (1)$$

$$\frac{P_\ell}{P} = \frac{1.1\ K}{2.7K + 1} \cdot \frac{h_\ell}{b'} \quad \ldots\ldots\ldots\ldots\ldots\ldots\ldots\ldots (2$$

Notation

14.

a_1 ..... = slope of the lift/angle of incidence curve for the tailplane and elevators when the elevators are neutral. Expressed as change in C_L per radian.

a_2 ..... = slope of the lift/elevator angle curve for the tailplane and elevators with a constant tail setting. Expressed as change in C_L per radian.

b' ..... ft. ..... = tailplane and elevator span.

c ..... ft. ..... = mean chord of main plane.

c' ..... ft. ..... = mean chord of tailplane and elevator.

C_L ..... = lift coefficient of tailplane and elevator.

C_m ..... = pitching moment coefficient for moments on the model about the aeroplane centre of gravity.

d ..... ft. ..... = distance of the centre of pressure for complete tailplane and elevators, measured from the tailplane leading edge, in terms of c'. d is positive when the centre of pressure is behind the leading edge.

Notation (cont'd)

d'	ft.	= centre of pressure position defined in the same manner as "d", applicable to a unit length of span.
E		= ratio of elevator (or rudder) chord to total tailplane and elevator (or fin and rudder) chord.
ℓ	ft.	= distance between the aeroplane centre of gravity and a point 0.25 c' behind the tailplane leading edge.
m		= slope of the pitching moment coefficient/ elevator angle curve for the tailplane and elevator when the pitching moment coefficient is measured about the quarter chord point. Expressed as change in C_m per radian.
M_1	lb.ft.	= pitching moment about the aeroplane centre of gravity, not including the pitching moment due to the tailplane and elevators. M_1 should be obtained from balance calculations corrected when possible to agree with wind tunnel tests. M_1 is positive when it tends to increase the angle of incidence.
M_2	lb.ft.	= pitching moment due only to the air forces on the tailplane and elevators acting about a point 0.25c' behind the tailplane leading edge. M_2 is positive when it tends to increase the angle of incidence.
P	lb.	= total load on the tailplane and elevators.
p	lb/ft.	= load per unit length of span on tail- plane and elevators or fin and rudders.
S	sq.ft.	= gross wing area.
S'	sq.ft.	= gross tailplane and elevator area.
α	rads	= incidence of main plane chord.
α'	rads	= effective incidence of the fixed portion of the tailplane.
ϵ	rads	= angle of downwash.
η	rad	= angle between the elevator and the fixed portion of the tailplane.
η_T	rad	= tailplane setting relative to the main plane chord.
ρ	slugs/cu.ft.	= air density.

C

AP 970 Design Requirements for Aeroplanes AL25-37 19460801 OCR.pdf

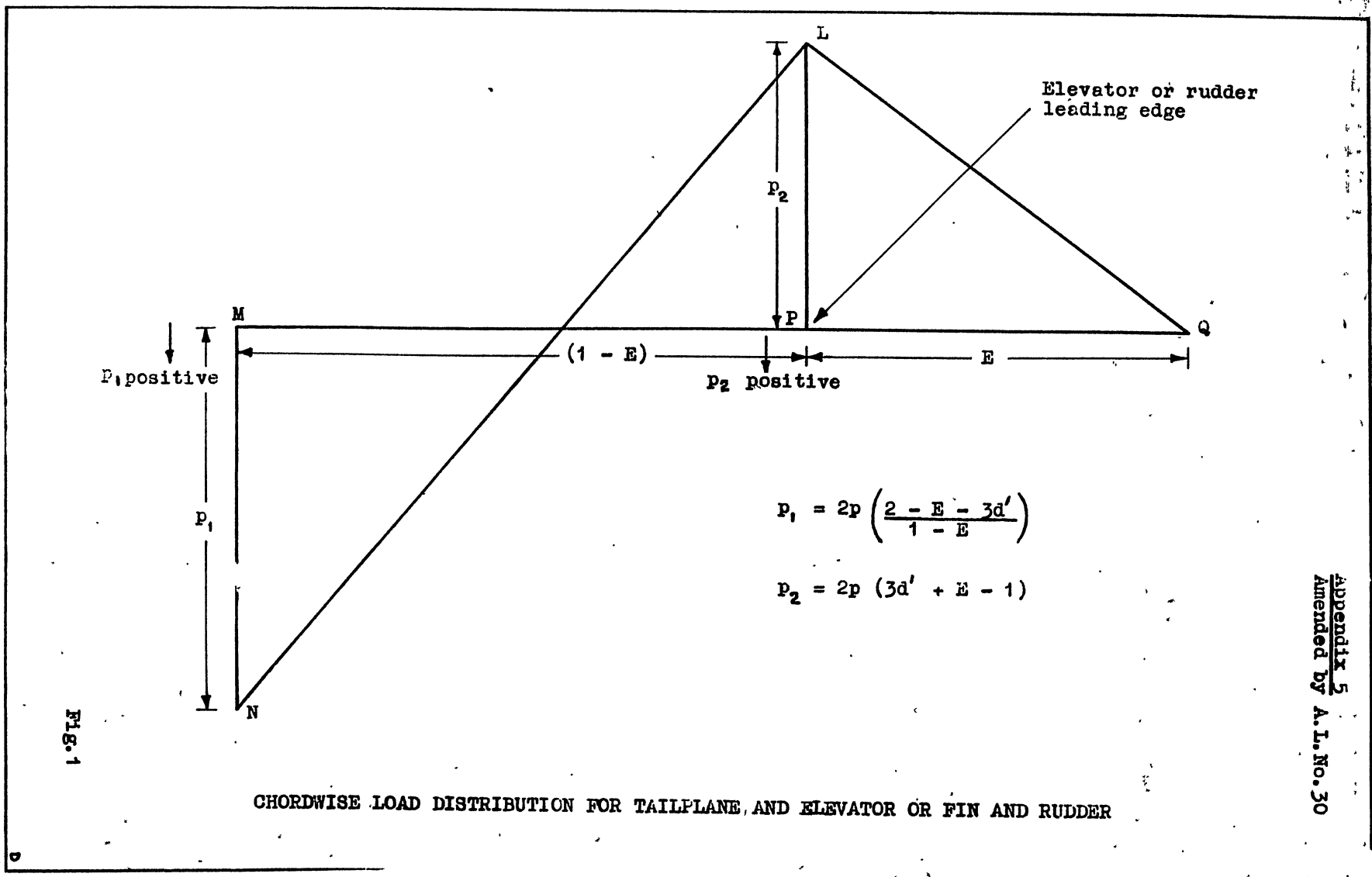

$$p_1 = 2p\left(\frac{2 - E - 3d'}{1 - E}\right)$$

$$p_2 = 2p\,(3d' + E - 1)$$

Fig.1

CHORDWISE LOAD DISTRIBUTION FOR TAILPLANE AND ELEVATOR OR FIN AND RUDDER

Appendix 5
Issued with A.L.N°12

FIG.2

CURVES OF C_M AGAINST α-WITH AND WITHOUT TAIL.

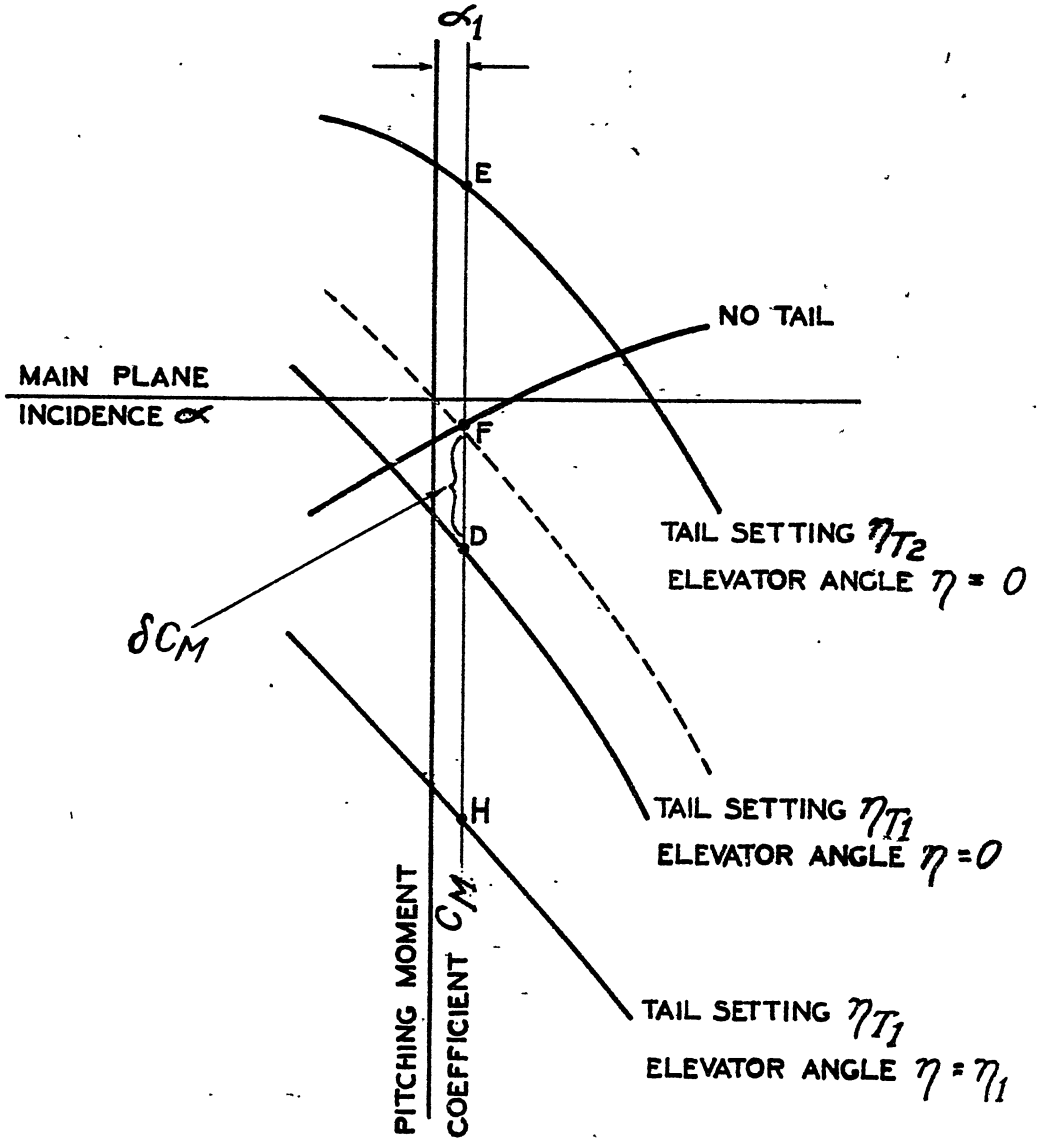

DETERMINATION OF DOWNWASH ANGLE ϵ FROM WIND TUNNEL TESTS.

Appendix 5
Issued with A.L.N°12

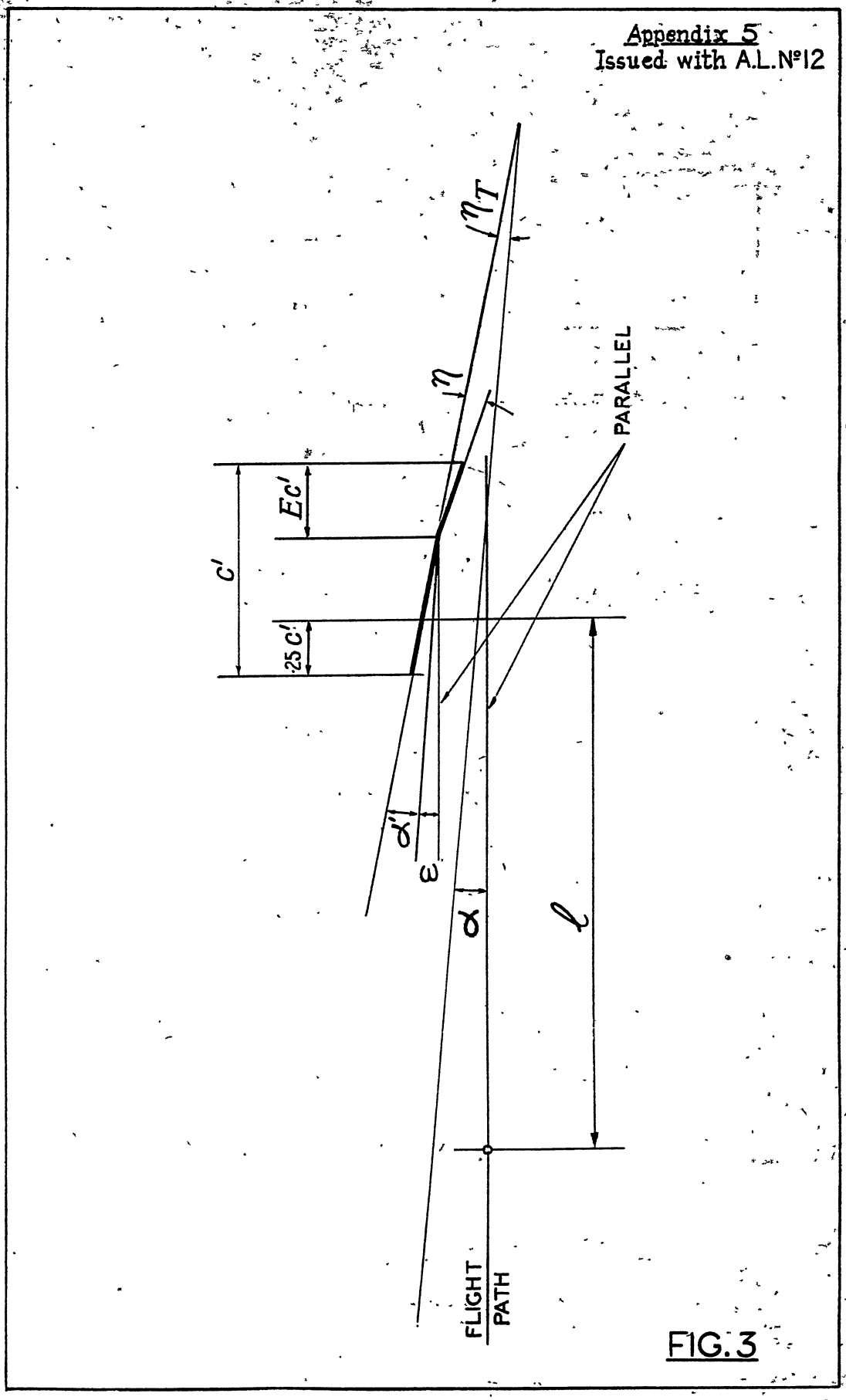

FIG. 3

E

Appendix 5
Amended by A.L.No.30
(Re-issued with A.L.No.31)

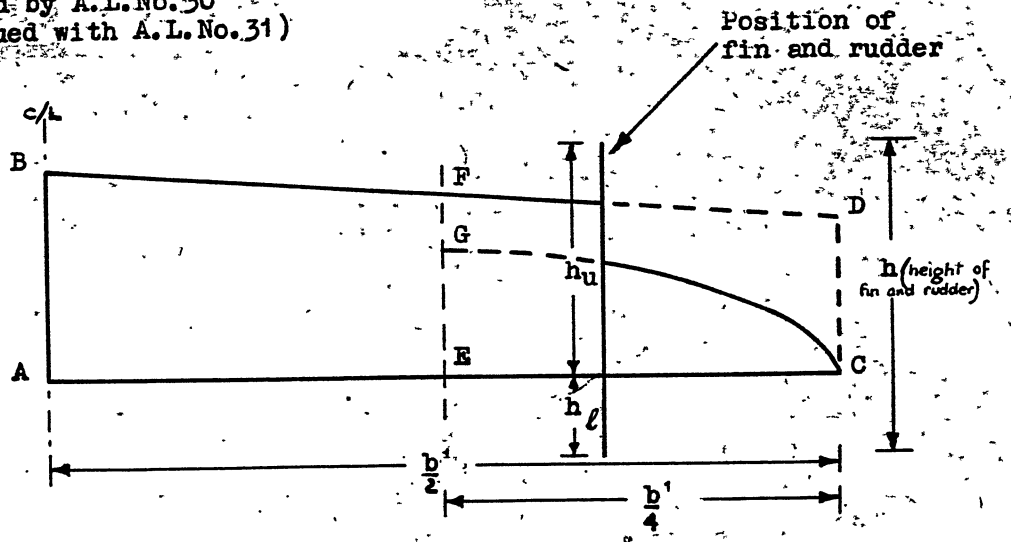

LOAD DISTRIBUTION ON TAILPLANE AND ELEVATOR

Fig.4A.

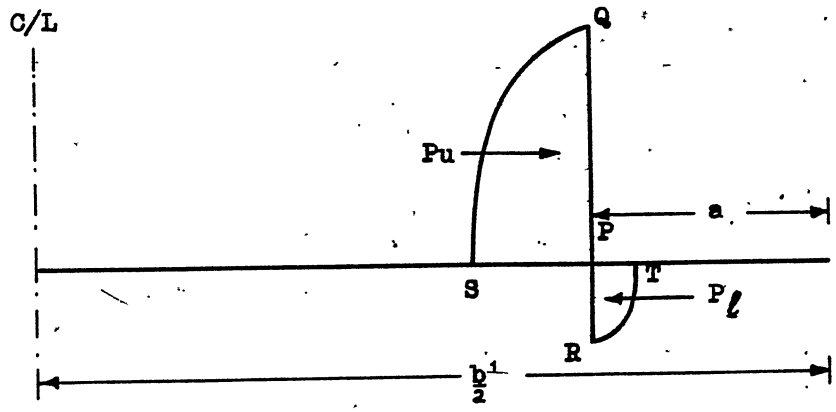

LOAD DISTRIBUTION ON FIN AND RUDDER

Fig.4B.

SPANWISE LOAD DISTRIBUTION FOR TAIL UNITS

WITH OUTBOARD FINS AND RUDDERS

Fig.4.

APPENDIX 6

STANDARD ATMOSPHERIC CONDITIONS+

1. General.- This Appendix defines standard atmospheric temperatures for use when aeroplanes are required to operate in various climatic conditions. They are also suitable for use in correcting test results and cooling suitabilities to climatic conditions differing from those in which the tests are made.

2. Tropical summer standard.- These temperatures are based on statistics of the Indian Meteorological Department 1935-1937 and are representative of tropical conditions and those prevailing in the "Near East".

3. Temperate summer standard.- These temperatures are based on observations at Kew and Sealand over the period 1921-1935 and on records of the Duxford Meteorological Flight. The arbitrary maximum has been chosen so that European conditions are covered for design purposes.

4. Sub-arctic winter standard.- These temperatures are based on observations at:-

Petropavlovsk	(lat 59° .41'N)	1902-1909
Abisko	(lat 68° .21'N)	1907-1929
Obdorsk	(lat 66° .31'N)	1936.

The standard covers N.W.Europe, but excludes N.America, Siberia and the Antartic continent where lower temperatures prevail.

+ Previously A.D.M.491.

AP 970 Design Requirements for Aeroplanes AL25-37 19460801 OCR.pdf Page 361

TABLE I

STANDARD ATMOSPHERIC CONDITIONS FOR DESIGN PURPOSES

Air density at zero height (Barometer 29.92 ins. temp. 15°C) is 0.07652 lb/ft^3

I.C.A.N. CONDITIONS				SUB-ARCTIC WINTER		TEMPERATE SUMMER		TROPICAL SUMMER	
Height ft Pressure Basis	Relative Pressure	°C	Relative Density	°C	Relative Density	°C	Relative Density	°C	Relative Density
0	1.000	15.00	1.000	-20.0	1.138	27.00	0.960	41.00	0.917
1,000	0.964	13.02	0.971	-18.0	1.089	25.02	0.932	39.02	0.890
2,000	0.930	11.04	0.943	-17.0	1.046	23.04	0.905	37.04	0.864
3,000	0.896	9.06	0.915	-16.4	1.006	21.06	0.878	35.06	0.838
4,000	0.864	7.08	0.888	-16.2	0.969	19.08	0.852	33.08	0.813
5,000	0.832	5.09	0.862	-16.4	0.934	17.09	0.826	31.09	0.788
6,000	0.801	3.11	0.836	-17.1	0.901	15.11	0.801	29.11	0.764
7,000	0.771	1.13	0.810	-18.3	0.872	13.13	0.776	27.13	0.740
8,000	0.743	-0.85	0.786	-20.2	0.846	11.15	0.753	25.15	0.717
9,000	0.715	-2.83	0.762	-22.1	0.821	9.17	0.730	23.17	0.695
10,000	0.688	-4.81	0.739	-24.0	0.796	7.19	0.707	21.19	0.674
11,000	0.661	-6.79	0.715	-26.0	0.771	5.21	0.684	19.21	0.651
12,000	0.636	-8.77	0.693	-28.0	0.748	3.23	0.663	17.23	0.631
13,000	0.611	-10.76	0.671	-30.0	0.724	1.24	0.642	15.24	0.610
14,000	0.587	-12.74	0.650	-31.9	0.701	-0.74	0.621	13.26	0.591
15,000	0.564	-14.72	0.629	-34.0	0.680	-2.72	0.601	11.28	0.571
16,000	0.542	-16.70	0.609	-35.9	0.658	-4.70	0.582	9.30	0.553
17,000	0.520	-18.68	0.589	-37.7	0.636	-6.68	0.562	7.32	0.534
18,000	0.499	-20.66	0.570	-39.6	0.616	-8.66	0.544	5.34	0.517
19,000	0.479	-22.64	0.551	-41.2	0.595	-10.64	0.526	3.36	0.499
20,000	0.459	-24.62	0.532	-43.1	0.575	-12.62	0.508	1.38	0.482
21,000	0.441	-26.61	0.515	-44.9	0.557	-14.61	0.492	-0.61	0.466
22,000	0.422	-28.59	0.498	-46.5	0.537	-16.59	0.474	-2.59	0.450
23,000	0.404	-30.57	0.481	-48.1	0.518	-18.57	0.458	-4.57	0.434
24,000	0.387	-32.55	0.464	-49.7	0.499	-20.55	0.441	-6.55	0.419
25,000	0.371	-34.53	0.448	-51.3	0.482	-22.53	0.427	-8.53	0.404
26,000	0.355	-36.51	0.432	-53.0	0.465	-24.51	0.411	-10.51	0.389
27,000	0.340	-38.49	0.417	-54.6	0.448	-26.49	0.397	-12.49	0.375
28,000	0.325	-40.47	0.402	-56.0	0.431	-28.47	0.383	-14.47	0.362
29,000	0.311	-42.46	0.388	-57.5	0.416	-30.46	0.369	-16.46	0.349
30,000	0.297	-44.44	0.374	-59.0	0.400	-32.44	0.356	-18.44	0.336
31,000	0.283	-46.42	0.360	-60.1	0.383	-34.42	0.342	-20.42	0.323
32,000	0.271	-48.40	0.347	-61.4	0.369	-36.40	0.330	-22.40	0.311
33,000	0.258	-50.38	0.334	-62.8	0.353	-38.38	0.317	-24.38	0.299
34,000	0.247	-52.36	0.322	-64.0	0.340	-40.0	0.305	-26.36	0.288
35,000	0.235	-54.34	0.310	-65.0	0.326	-40.0	0.290	-28.34	0.277
36,000	0.224	-56.32	0.298	-65.0	0.310	-40.0	0.277	-30.32	0.266
37,000	0.214	-56.50	0.284	-65.0	0.296	-40.0	0.265	-32.30	0.255
38,000	0.204	-56.50	0.271	-65.0	0.282	-40.0	0.252	-34.28	0.246
39,000	0.194	-56.50	0.258	-65.0	0.269	-40.0	0.240	-36.27	0.236
40,000	0.185	-56.50	0.246	-65.0	0.256	-40.0	0.229	-38.25	0.227
41,000	0.176	-56.50	0.234	-65.0	0.244	-40.0	0.218	-40.23	0.218
42,000	0.168	-56.50	0.223	-65.0	0.232	-40.0	0.208	-42.21	0.209
43,000	0.160	-56.50	0.213	-65.0	0.222	-40.0	0.198	-44.19	0.201
44,000	0.153	-56.50	0.203	-65.0	0.211	-40.0	0.189	-46.17	0.194
45,000	0.145	-56.50	0.193	-65.0	0.201	-40.0	0.179	-48.15	0.186
46,000	0.139	-56.50	0.184	-65.0	0.192	-40.0	0.172	-50.13	0.179
47,000	0.132	-56.50	0.176	-65.0	0.183	-40.0	0.163	-52.11	0.173
48,000	0.126	-56.50	0.167	-65.0	0.174	-40.0	0.156	-54.09	0.165
49,000	0.120	-56.50	0.160	-65.0	0.167	-40.0	0.148	-56.08	0.160
50,000	0.114	-56.50	0.152	-65.0	0.158	-40.0	0.141	-58.06	0.153

FS/11

Appendix 6
Issued with A.L.No.16.

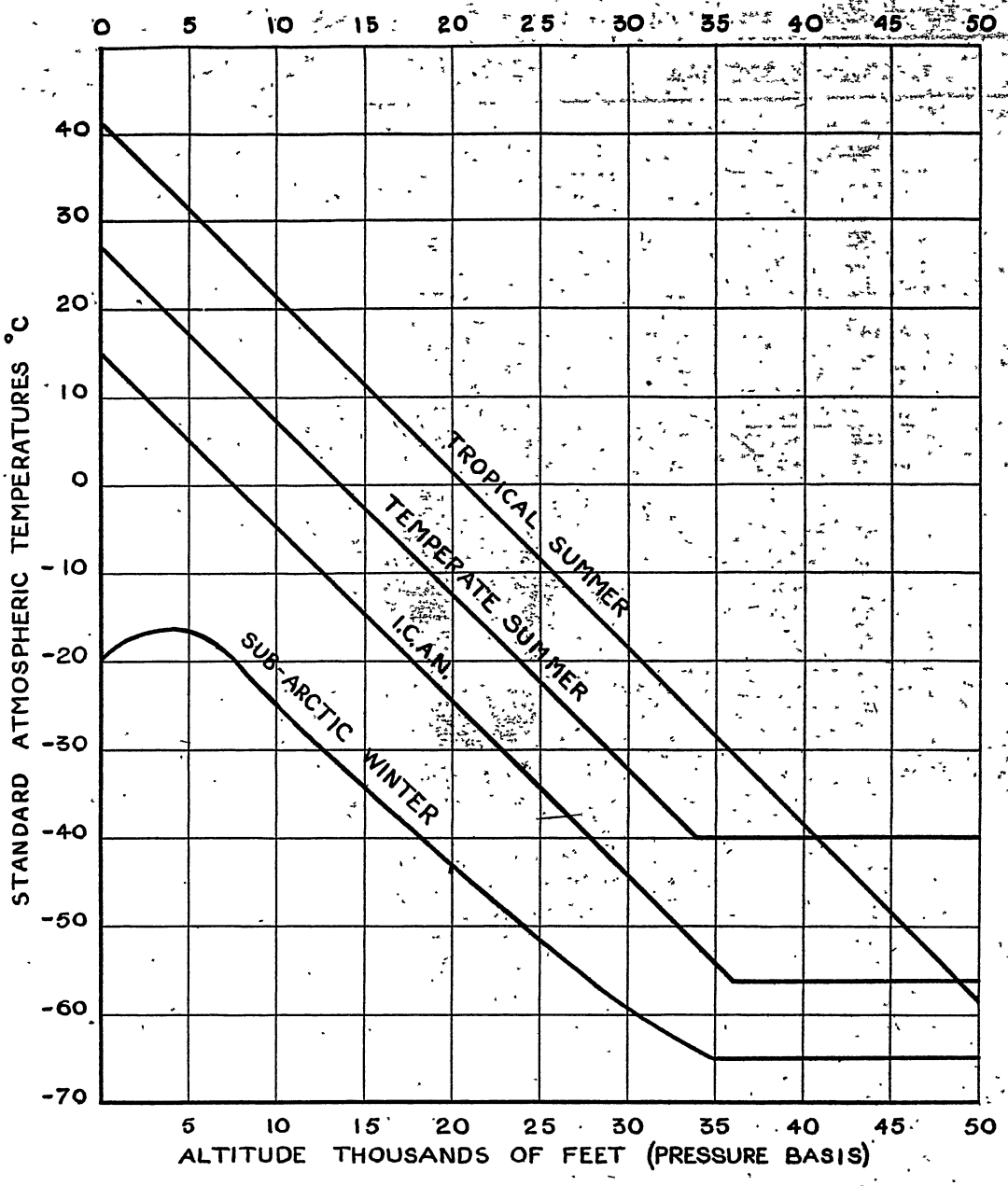

STANDARD ATMOSPHERIC TEMPERATURES

Fig.1

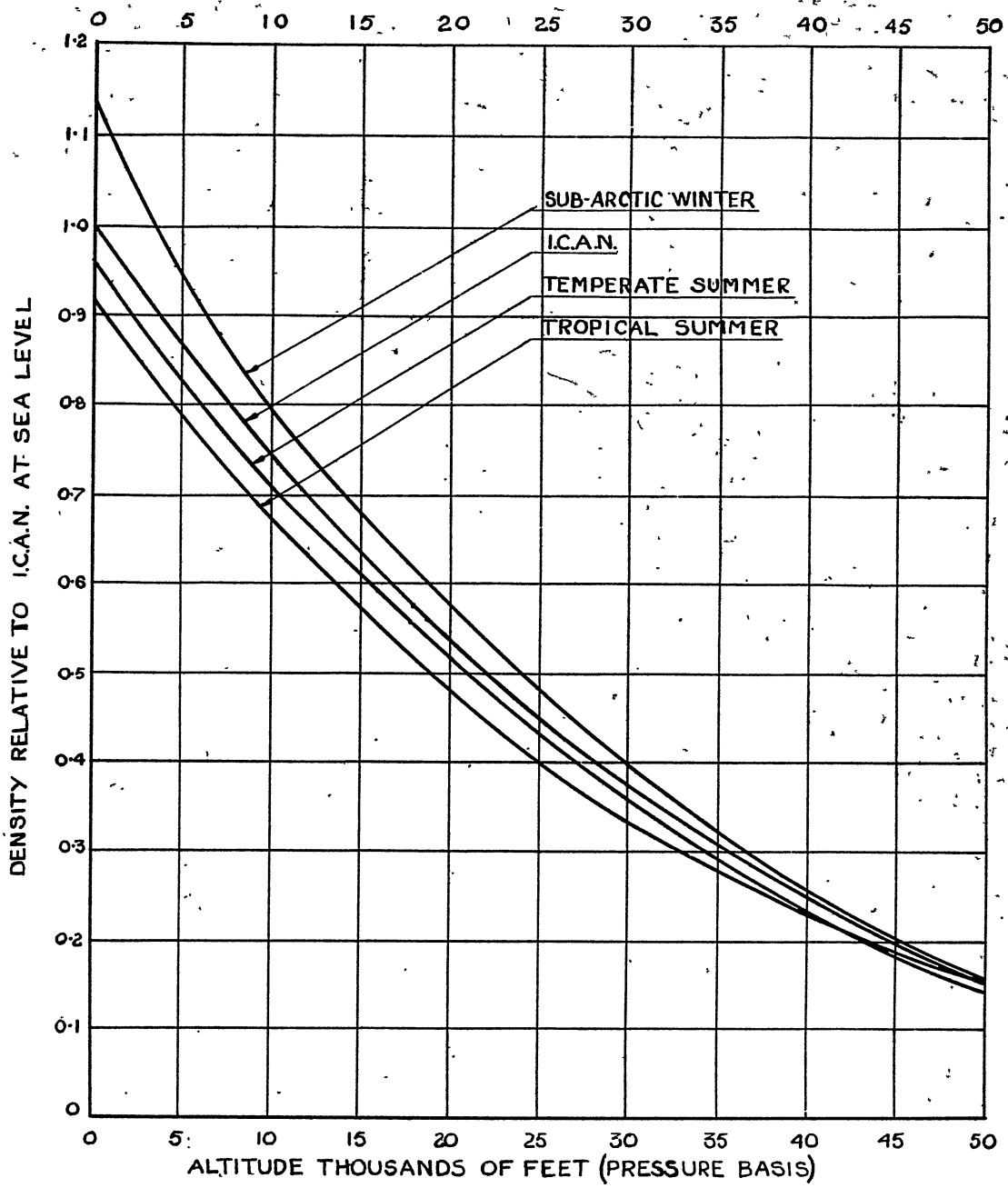

RELATIVE DENSITIES OF STANDARD ATMOSPHERES

Fig 2

AP 970 Design Requirements for Aeroplanes AL25-37 19460801 OCR.pdf

APPENDIX 7

REPORT FORMS

Introduction

1. The forms given in this Appendix are for use in connection with the tests of Part 10. The layout is a typical one only, and may be amended to suit individual requirements.

2. The following forms are included,-

Form 1	Stationary Ground Run.
Form 2	Radiator Suitability Climb Test.
Form 3	Radiator Suitability Level Flight Test.
Form 4	Radiator Suitability Report.
Form 5	Cylinder Cooling Climb Test.
Form 6	Cylinder Cooling Level Flight Test.
Form 7	Cylinder Cooling Report.
Form 8	
Form 9	
Form 10	
Form 11	
Form 12	Air Compressor Cooling Tests.
Form 13	Air Compressor Cooling Report.

Appendix 7
Amended by A.L.No.29

Flight test report No.

Form 1. **STATIONARY GROUND RUN**

(A)

Aeroplane ..... Type of radiator .....

Contract No. ..... Type of oil cooler .....

Engine ..... Coolant .....

Propeller ..... Oil .....

(B)

Atmospheric temperature, ground level ..... °C

Setting of header tank relief safety valve ..... lb/s .in.

Maximum permissible oil temperature, climb ..... °C

Normal maximum permissible coolant temperature+ ..... °C

Maximum permissible cylinder temperature, climb+ ..... °C

(C)

Approximate wind speed ..... m.p.h. Boost ..... lb/sq.in.

Direction of wind ..... R.P.M. .....

Engine used .....

Time	Coolant temp., Engine outlet+	Compressor temp.	Oil temp. at engine inlet (°C)	Engine oil pressure (lb/sq.in.)	Remarks
	Temp. and Nos. of hottest cylinders				

+ Delete item not applicable.

AP 970 Design Requirements for Aeroplanes AL25-37 19460801 OCR.pdf
Page 307

FS/59

Form 2.

RADIATOR SUITABILITY CLIMB TEST

Flight test report No. .....

Aircraft ..... Engine(s) ..... Radiator(s) .....Propeller(s) ..... Contract No. .....

All up weight ..... lbs. Airflow control setting ..... Specification No. of fuel .....

Details of coolant ..... Atmospheric pressure, ground level ..... " Hg.

Coolant temperature at take-off ..... °C Atmospheric temperature, ground level ..... ° C.

High pressure setting of safety valve ..... lb./sq.in. (Gauge)

Altitude (Ft.)	Time * (Mins.Secs.)	Coolant Temperature		Airspeed Indicator Reading (M.P.H./Knots)+	R.P.M.	Boost (lb/sq.in.)	Gauge Pressure in Coolant Tank (lb/sq.in.)	Atmospheric Temperature		Remarks
		At Engine Inlet (°C)	At Engine Outlet (°C)					°C	A.S.I.≠	

* From take off
+ Delete item not applicable
≠ At time of air temperature measurement

Appendix 7
Issued with A.L.No.19

Form 3.

RADIATOR SUITABILITY LEVEL FLIGHT TEST

Flight test report No. .....

Aircraft ..... Engine(s)..... Radiator(s) ..... Propeller(s)..... Contract No. .....

All up weight ..... lb Airflow control setting ..... Specification No. of fuel .....

Details of coolant ..... Atmospheric pressure, ground level ..... " Hg.

High pressure setting of safety valve ..... lb/sq.in.(Gauge) Atmospheric temperature, ground level ..... °C.

Altitude (Ft.)	Time ✱ (Mins.Secs.)	Coolant Temperature		Airspeed Indicator Reading (M.P.H./Knots)+	R.P.M.	Boost (lb/sq.in.)	Gauge Pressure in Coolant Tank (lb/sq.in.)	Atmospheric Temperature		Remarks
		At Engine Inlet (°C)	At Engine Outlet (°C)					°C	A.S.I.≠	

✱ From take off

\+ Delete item not applicable

≠ At time of air temperature measurement

AP 970 Design Requirements for Aeroplanes AL25-37 19460801 OCR.pdf

Appendix 7,
Issued with A.L.No.19

Form 4. **RADIATOR SUITABILITY REPORT** Report No. .....

(A)

Aircraft ..... All up weight ..... lb.

Engine(s) ..... Radiator - type .....

Propeller(s) ..... - drawing and issue No. .....

Contract No. .....

(B)

Computation based on flight test report No. .....

Basis of Computation Suitability = $\frac{t_n - t_a}{t_o - t_a}$ (see Chap.1002)

Normal maximum permissible temperature (t_n) Cruising ..... °C
All out ..... °C

Altitude ≠ Corrected (Ft.)	Atmospheric Temperature Corrected (°C) (t_a)	Coolant Temperature Engine Outlet Corrected (°C) (t_o)	Coolant Temperature Rise (°C)	Suitability Temperate ✕ / Tropical	Remarks
					CLIMB
Time + (Min.Sec.)					LEVEL FLIGHT At....., ft. Corrected altitude

≠ Altimeter to be set to 1013 m.b. on the ground altitude readings to be corrected for calibration errors.
✕ Delete item not applicable.
+ From commencement of level Flight.

FS/60

Appendix 7
Issued with A.L.No.19

Form 5.

CYLINDER COOLING CLIMB TEST

Flight test report No. .....

Aircraft ..... Engine(s) ..... Propeller(s) ..... Contract No. .....

All up weight ..... lb Cooling gill position ..... Specification No. of fuel .....

Oil temperature at inlet to engine at take off ..... °C Atmospheric pressure, ground level ..... " Hg.

Atmospheric temperature, ground level ..... °C.

Altitude (Ft.)	Time * (Min.Sec.)	Cylinder Temperatures observed °C (t'c)									Airspeed Indicator Reading ≠ (M.P.H./Knots)	R.P.M.	Boost (lb/sq.in.)	Oil Temp: engine inlet (°C)	Engine Oil Pressure (lb/sq.in.)	Atmospheric Temperature		Remarks
		1	2	3	4	5	6	7	8	9						(°C)	A.S.I.≠	
		(No. of columns as required)																

* From take off
≠ Delete item not applicable
≠ At time of air temperature measurement

Appendix 7
Issued with A.L.No.19

FS/62

Form 12

AIR COMPRESSOR COOLING TESTS

Flight test report No.

Type of compressor .....

Limiting temperature of compressor head / air delivery * .....°C

Aircraft ..... Engine(s) ..... Propeller(s) ..... Contract No. .....

Atmospheric pressure ground level ..... "Hg

All up weight .....lb.

Atmospheric temperature ground level ..... °C

Altitude (Ft.)	Time (Mins.Secs.)	Temperature (°C) of Compressor Head* / Air Delivery (t'c)	Airspeed Indicator Reading (M.P.H./Knots)*	R.P.M.	Boost (lb./sq.in.)	Atmospheric Temperature		Remarks
						°C	A.S.I. ≠	
			CLIMB					
			LEVEL FLIGHT					

* Delete item when not applicable
≠ At time of air temperature measurement

Appendix 7
Issued with A.L.No.19

Form 13. **AIR COMPRESSOR COOLING REPORT** Report No.

(A)

Aircraft ..... All up weight .....lb.

Engine(s) ..... Compressor .....

Propellers .....

Contract No. .....

(B) Computation based on flight test report No. .....

Basis of computation = $t_c = t'_c + 0.8\ (t_s - t_a)$ (Chap. 1004)

Maximum permissible temperature of compressor head ✱
Air delivery ..... °C

Altitude ≠ corrected (ft.)	Atmospheric temperature corrected (°C) (t_a)	Observed temperature corrected (°C) Compressor head ✱ Air Delivery	Temperature (°C) of Compressor head ✱ Air Delivery Corrected to Temperate ✱ Tropical	Remarks
				CLIMB
Time + (Min.Sec.)				LEVEL FLIGHT AT feet, corrected altitude.

≠ Altimeter to be set to 1013 m.b. on the ground, altitude readings to be corrected for calibration errors.
✱ Delete item not applicable
+ From commencement of level flight.

Amended by A.L.No.31

Appendix 8

Standard Physical Characteristics of the Average Airman

General

This Appendix contains information regarding the dimensions, weights and C.G. positions of the various parts of the human body, together with C.G. positions of the body, as a whole, in various postures.

2. The data given were obtained from R.A.E. Technical Note No.58, which should be consulted if greater detail is required.

3. The purpose of the Appendix is to establish a standard to which various dimensional and strength requirements associated with crew positions can be related.

Method of presentation

4. To facilitate the application of the data the contours of the body are considered to consist of circles and straight lines only, while to enable the various postures to be simulated the figure has been developed in eight separate portions, suitably hinged. The dimensions, weight, and C.G. positions are in turn related to these portions.

Dimensions

5. The dimensions given in Figure 1 are those of the average airman in flying kit, without parachute, and are complete with the exception of the frontal breadth of the legs and feet. The maximum for each leg and foot should be taken as 6 in.

6. Dimensions for "small" or "large" airmen can be estimated as follows:-

"Small"	95½% of dimensions of Fig.1.
"Large"	104½% of dimensions of Fig.1.

Weights

7. The weights given in Table 1 are those of the average airman in flying kit. They include the flying suit (total 25 lb.) but not the seat harness (4 lb.) and parachute equipment (23 lb.), the latter consisting of parachute pack with canopy (14 lb.) and of parachute harness (9 lb.).

8. Weights for "small" and "large" airmen can be estimated as follows:-

"Small" 87% of weights in Table 1.
"Large" 114% of weights in Table 1.

A

Appendix 8
Issued with A.L.No.28.

C.G. Positions

9. The C.G. positions are indicated in Figures 1 and 2 by the sign ⊕ and are associated with the weight conditions of paragraph 7.

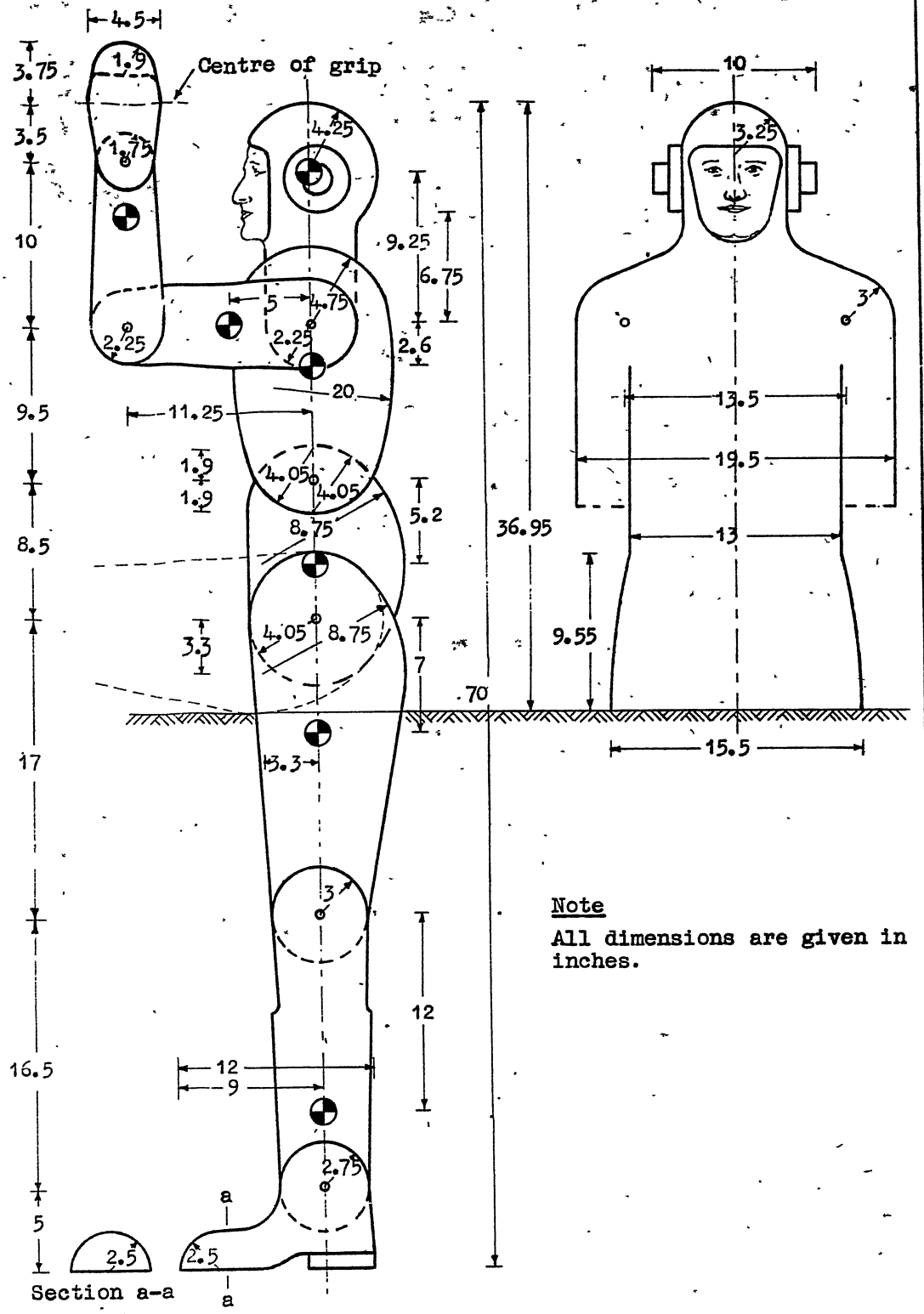

Note

All dimensions are given in inches.

STANDARD DIMENSIONS OF THE AVERAGE AIRMAN.

Fig. 1.

B.

Appendix 8
Issued with A.L.No.28

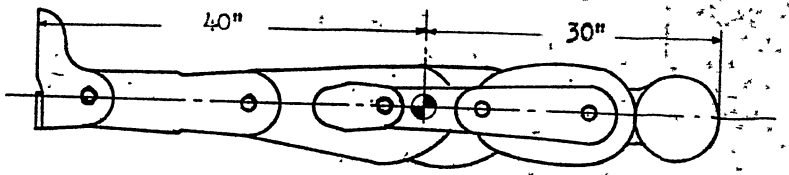

(A) Prone or standing

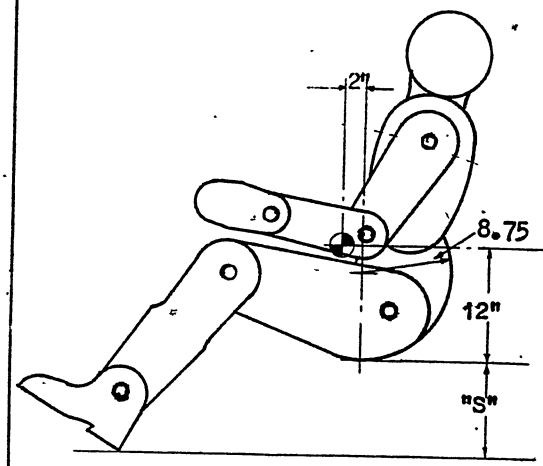

(B) Seated

(Note: The effect of dimension "S" may be neglected.)

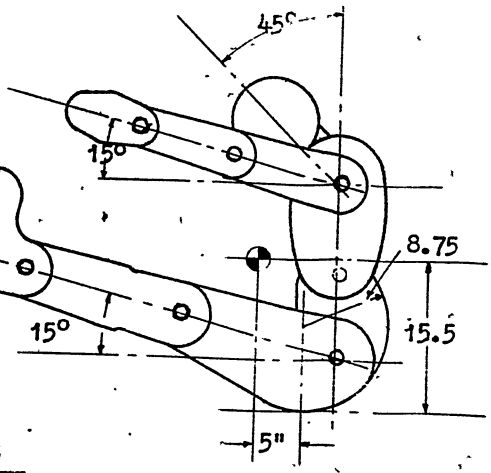

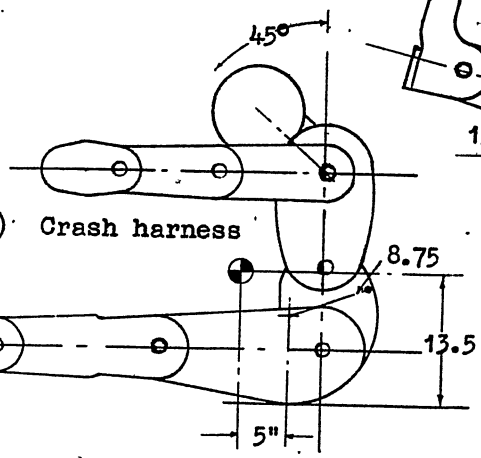

(C) Crash harness

(D) Crash harness

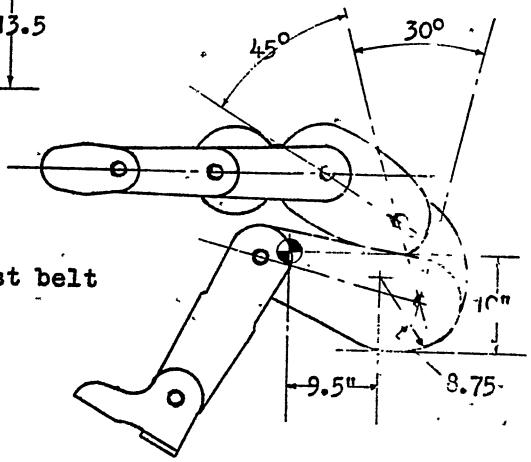

(E) Crash waist belt

C.G.POSITIONS

TABLE I

STANDARD (CLOTHED) WEIGHTS OF THE AVERAGE AIRMAN

Part of the body (with flying suit)	LB.	%
Head and neck	15	8.3
Upper trunk	49	27.2
Lower trunk	28	15.5
Thighs	40	22.2
Legs and feet	30	16.7
Upper arms	10	5.6
Forearms and hands	8	4.5
Total	180	100

AP 970 Design Requirements for Aeroplanes AL25-37 [19460801] OCR.pdf