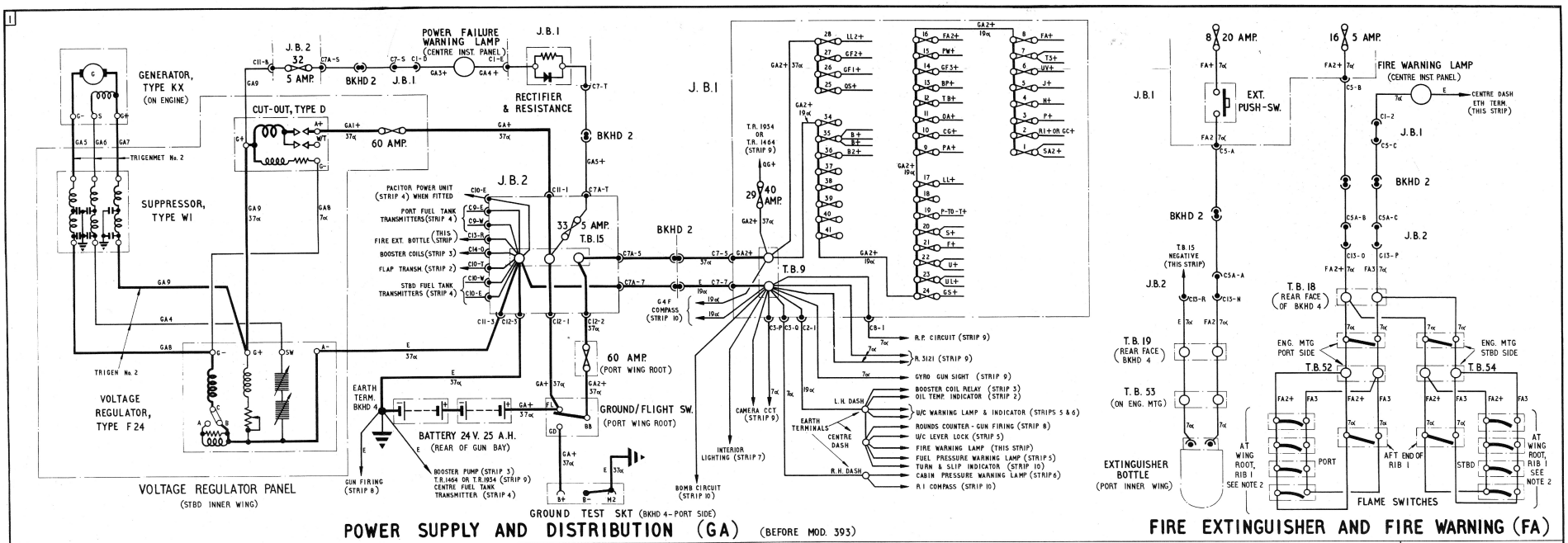

POWER SUPPLY AND DISTRIBUTION (GA) (BEFORE MOD. 393)

FIRE EXTINGUISHER AND FIRE WARNING (FA)

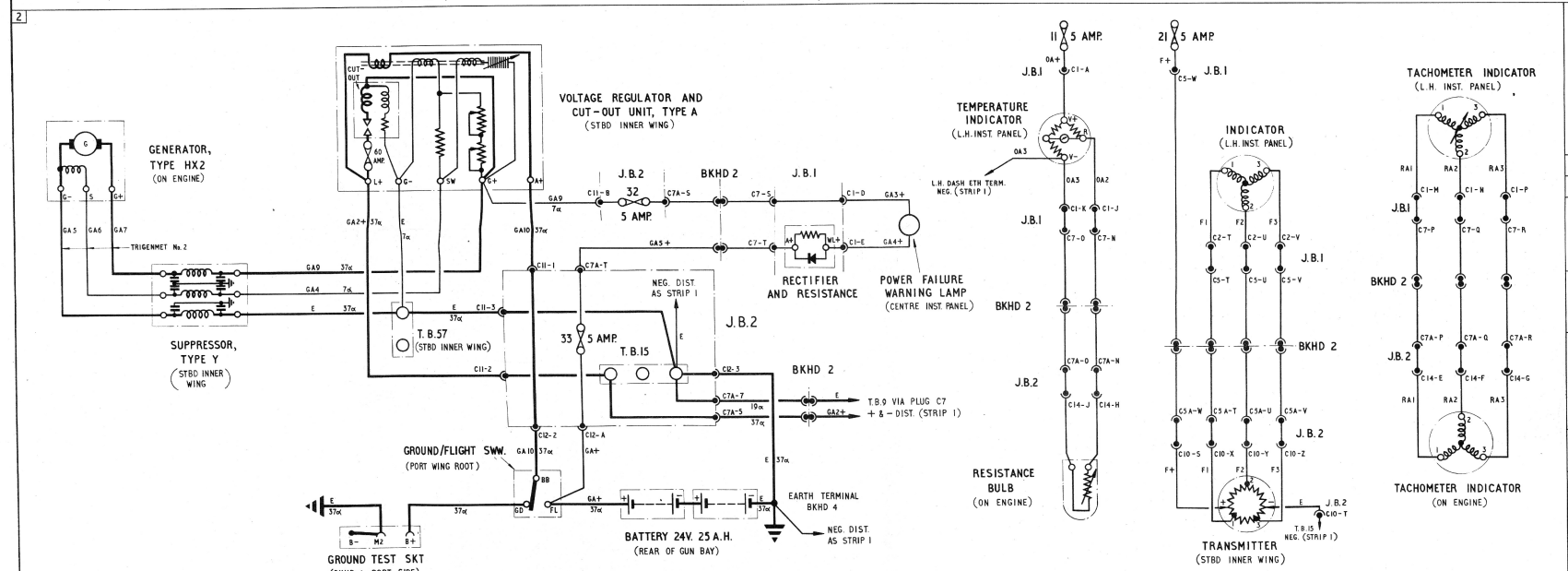

POWER SUPPLY (GA) (AFTER MOD. 393)

OIL TEMPERATURE (OA)

FLAP INDICATOR (F)

TACHOMETER (RA)

NOTES

1. ALL CABLES ON THIS SHEET ARE 4 AMP. UNLESS OTHERWISE STATED
2. MOD. 844 INTRODUCES EIGHT ADDITIONAL FLAME SWS.
3. MOD. 934 INTRODUCES PREN CABLES IN PLACE OF VIN OR CEL IN U/C & ENG. BAYS & TAIL CONE
4. MOD. 950 INTRODUCES PREN CABLES NOT COVERED BY MOD. 934

LIST OF CONTENTS

SHEET	STRIP	CIRCUIT
1	1	POWER SUPPLY AND DISTRIBUTION (BEFORE MOD. 393) FIRE EXT. AND FIRE WARNING
	2	POWER SUPPLY (AFTER MOD. 393) OIL TEMP: FLAP INDICATOR TACHOMETER
2	3	TURBINE STARTING AND BOOSTER COILS: FUEL BOOSTER PUMP: EXHAUST GAS THERMOMETER
	4	FUEL CONTENTS
3	5	U/C INDICATOR & WARNING (BEFORE MOD. 908) U/C LEVER LOCK: FUEL PRESSURE WARNING
	6	U/C INDICATOR & WARNING (AFTER MOD. 908) CABIN PRESSURE WARNING PRESSURE HEAD HEATER
4	7	INTERIOR LIGHTG: NAV. LAMPS LANDING LAMP: IDENT. LAMPS
	8	GUN FIRING
5	9	GYRO GUN SIGHT: CAMERA ROCKET PROJECTILES RADIO SUPPLIES
	10	BOMB RELEASE R. I. COMPASS (BEFORE MOD. 668) G4F COMPASS (AFTER MOD. 668)
6		LOCATION OF EQUIPMENT

ASSOCIATED PUBLICATION – A.P. 4099E

A. L. No.	AMENDMENT DESCRIPTION	DATE	INITIALS

VAMPIRE FB Mk.5 AND 9 – *ELECTRICAL INSTALLATION*

AIR DIAGRAM 4551 — SHEET No. 1 OF SHEETS 6 — ISSUE 3 — JULY 1951

PREPARED BY THE MINISTRY OF SUPPLY FOR PROMULGATION BY AIR MINISTRY

INTRODUCING ISSUE 3 SUPERSEDING PREVIOUS ISSUES

A.T.P.

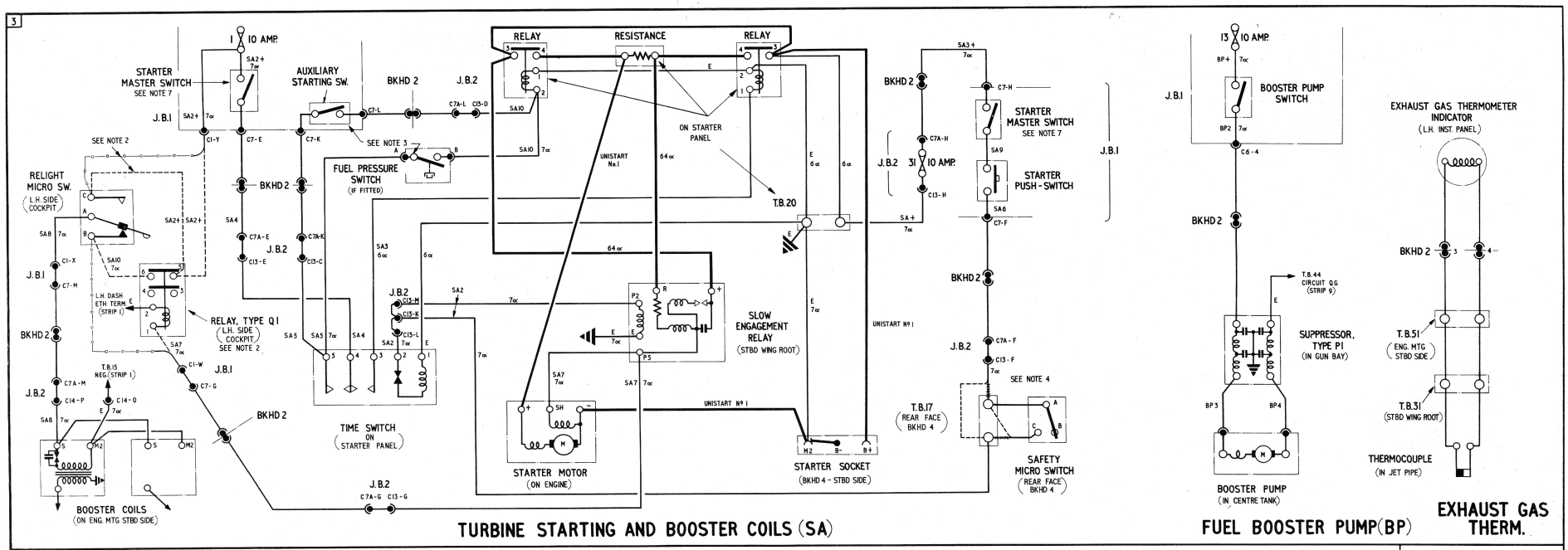

TURBINE STARTING AND BOOSTER COILS (SA)

FUEL BOOSTER PUMP (BP)

EXHAUST GAS THERM.

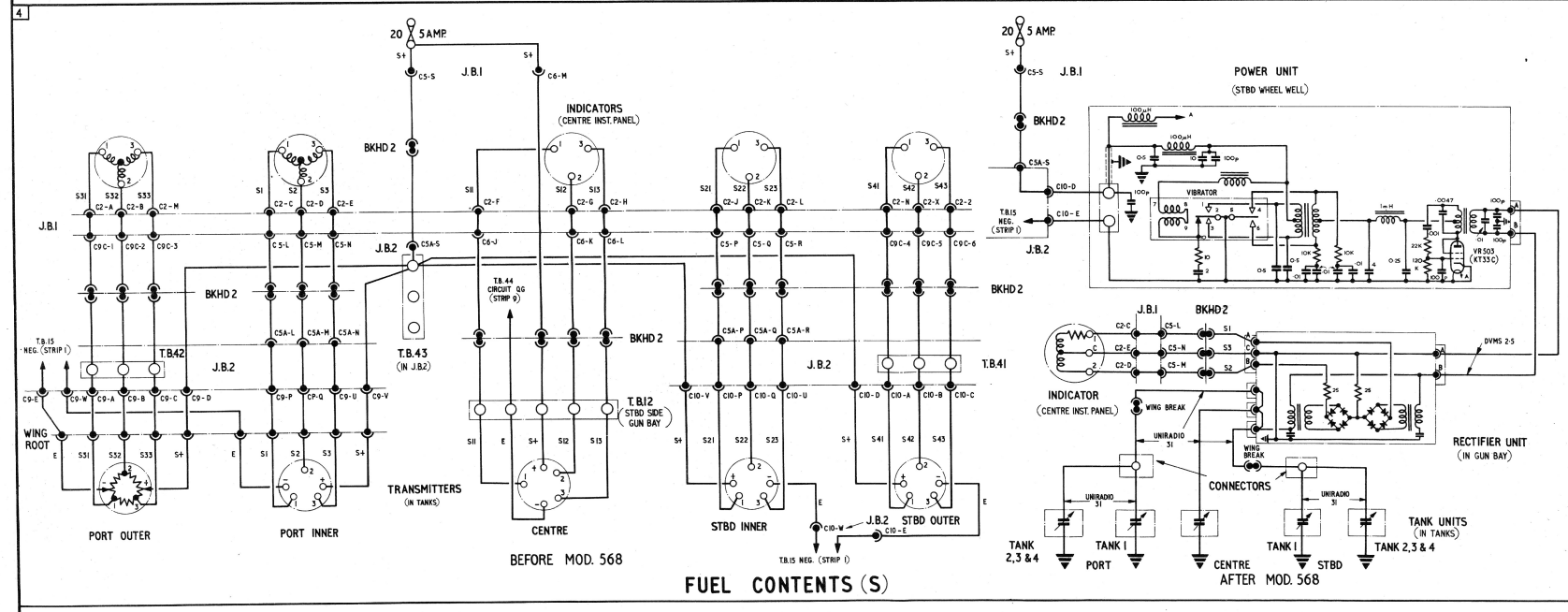

FUEL CONTENTS (S)

NOTES

1. ALL CABLES ON THIS SHEET ARE 4 AMP. UNLESS OTHERWISE STATED
2. RELAY, TYPE Q1 FOR BOOSTER COILS AND WIRING IN DOTTED AT RELAY INTRODUCED BY MOD. 840 & SUPERSEDES WIRING SHOWN THUS
3. FUEL PRESSURE SWITCH ON STARTER CIRCUIT INTRODUCED, AND AUXILIARY STARTING SWITCH LOCKED IN 'OFF' POSITION WHEN MOD. 856 IS INCORPORATED
4. STARTER SAFETY MICRO SWITCH MADE INOPERATIVE BY WIRING AS SHOWN IN DOTTED SUPERSEDING WIRING SHOWN THUS WHEN MOD. 921 IS INCORPORATED
5. MOD. 934 INTRODUCES PREN CABLES IN PLACE OF VIN OR CEL IN U/C & ENG. BAYS & TAIL CONE
6. MOD. 950 INTRODUCES PREN CABLES NOT COVERED BY MOD. 934
7. STARTER MASTER SWITCHES ARE MECHANICALLY COUPLED

VAMPIRE FB Mk.5 AND 9 – *ELECTRICAL INSTALLATION*

A.T.P.

ASSOCIATED PUBLICATION—A.P. 4099E

A.L. No.	AMENDMENT DESCRIPTION	DATE	INITIALS

AIR DIAGRAM 4551 — SHEET No. 2 — No. OF SHEETS 6 — ISSUE 3 — JULY 1951

PREPARED BY THE MINISTRY OF SUPPLY FOR PROMULGATION BY AIR MINISTRY

INTRODUCING ISSUE 3 SUPERSEDING PREVIOUS ISSUES

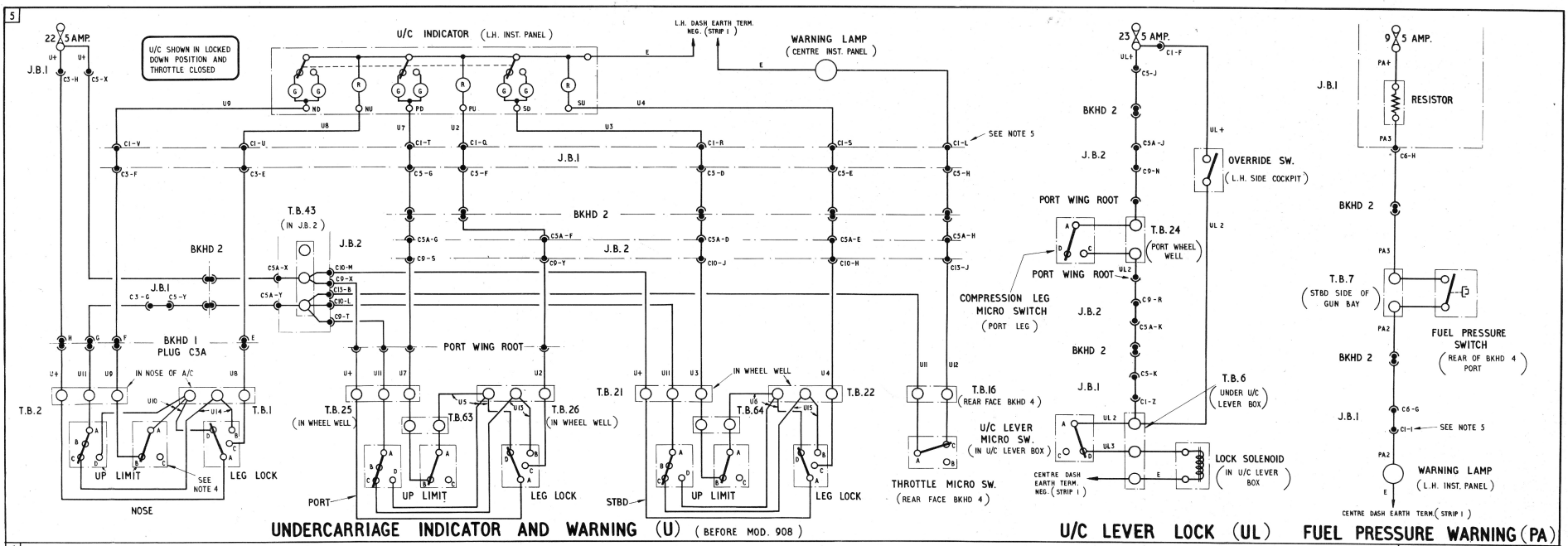

UNDERCARRIAGE INDICATOR AND WARNING (U) (BEFORE MOD. 908)

U/C LEVER LOCK (UL)

FUEL PRESSURE WARNING (PA)

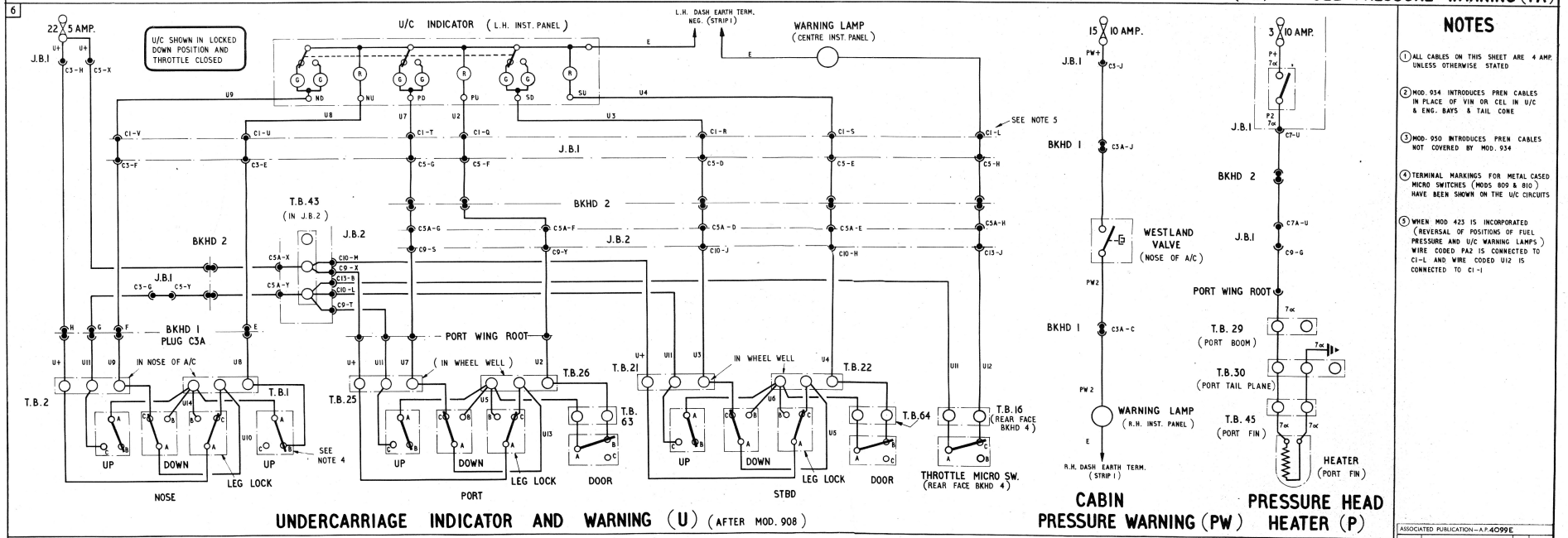

UNDERCARRIAGE INDICATOR AND WARNING (U) (AFTER MOD. 908)

CABIN PRESSURE WARNING (PW)

PRESSURE HEAD HEATER (P)

NOTES

1. ALL CABLES ON THIS SHEET ARE 4 AMP. UNLESS OTHERWISE STATED
2. MOD. 934 INTRODUCES PREN CABLES IN PLACE OF VIN OR CEL IN U/C & ENG. BAYS & TAIL CONE
3. MOD. 950 INTRODUCES PREN CABLES NOT COVERED BY MOD. 934
4. TERMINAL MARKINGS FOR METAL CASED MICRO SWITCHES (MODS 809 & 810) HAVE BEEN SHOWN ON THE U/C CIRCUITS
5. WHEN MOD 423 IS INCORPORATED (REVERSAL OF POSITIONS OF FUEL PRESSURE AND U/C WARNING LAMPS) WIRE CODED PA2 IS CONNECTED TO C1-L AND WIRE CODED U12 IS CONNECTED TO C1-1

VAMPIRE FB Mk.5 AND 9 – *ELECTRICAL INSTALLATION*

A.T.P.

ASSOCIATED PUBLICATION—A.P. 4099E

A.L. No.	AMENDMENT DESCRIPTION	DATE	INITIALS

AIR DIAGRAM 4551 — SHEET No. 3 — NO. OF SHEETS 6 — ISSUE 3 — JULY 1951

PREPARED BY THE MINISTRY OF SUPPLY FOR PROMULGATION BY AIR MINISTRY

INTRODUCING ISSUE 3 SUPERSEDING PREVIOUS ISSUES

RESTRICTED

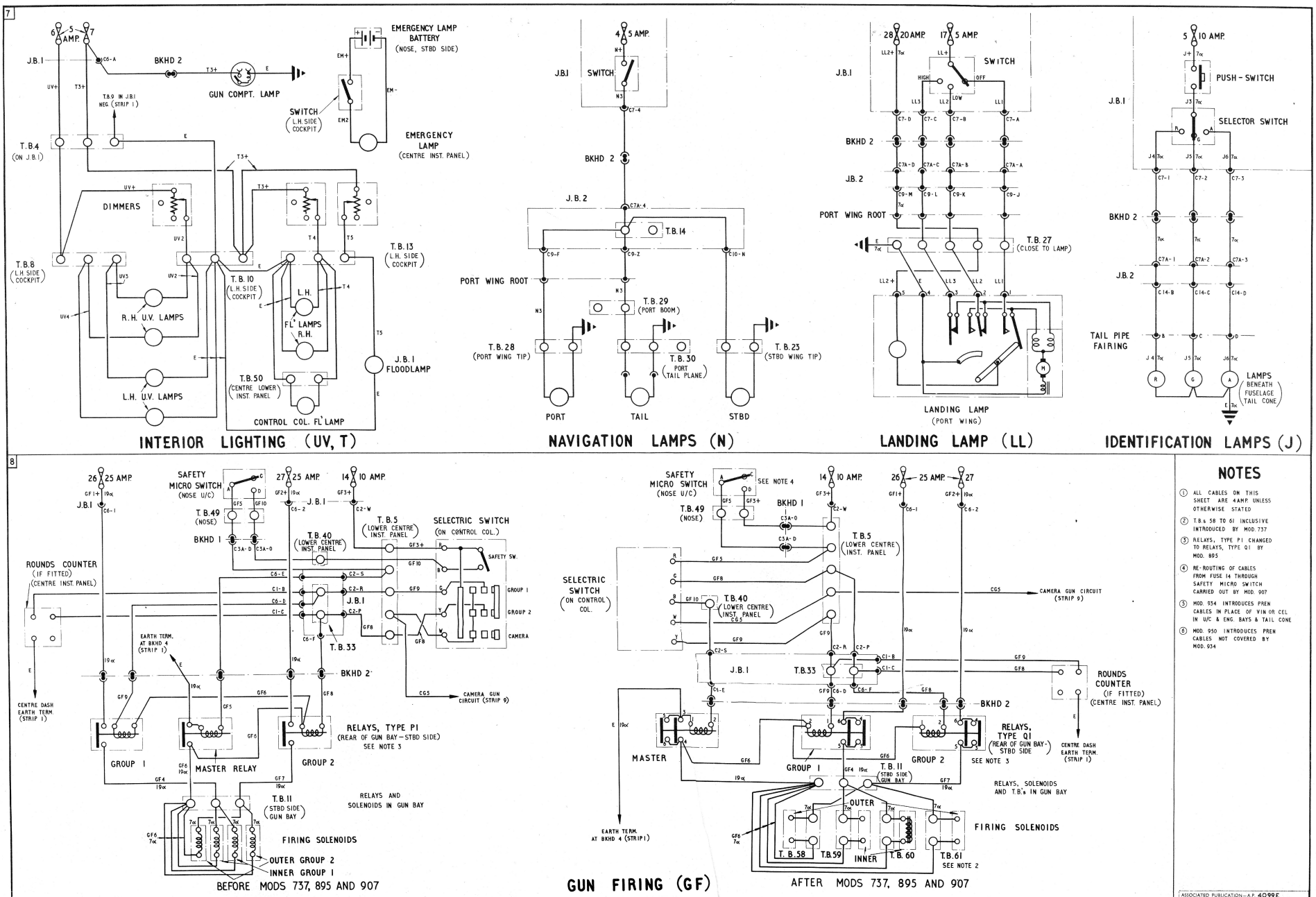

NOTES

1. ALL CABLES ON THIS SHEET ARE 4 AMP. UNLESS OTHERWISE STATED
2. T.B.s 58 TO 61 INCLUSIVE INTRODUCED BY MOD. 737
3. RELAYS, TYPE P1 CHANGED TO RELAYS, TYPE Q1 BY MOD. 895
4. RE-ROUTING OF CABLES FROM FUSE 14 THROUGH SAFETY MICRO SWITCH CARRIED OUT BY MOD. 907
5. MOD. 934 INTRODUCES PREN CABLES IN PLACE OF VIN OR CEL IN U/C & ENG. BAYS & TAIL CONE
6. MOD. 950 INTRODUCES PREN CABLES NOT COVERED BY MOD. 934

VAMPIRE FB Mk.5 AND 9 – *ELECTRICAL INSTALLATION*

A.T.P.

ASSOCIATED PUBLICATION—A.P. 4099E

A.L. No.	AMENDMENT DESCRIPTION	DATE	INITIALS

AIR DIAGRAM 4551 — SHEET No. 4 — No. OF SHEETS 6 — ISSUE 3 — JULY 1951

PREPARED BY THE MINISTRY OF SUPPLY FOR REPRODUCTION BY AIR MINISTRY

INTRODUCING ISSUE 3 SUPERSEDING PREVIOUS ISSUES

RESTRICTED

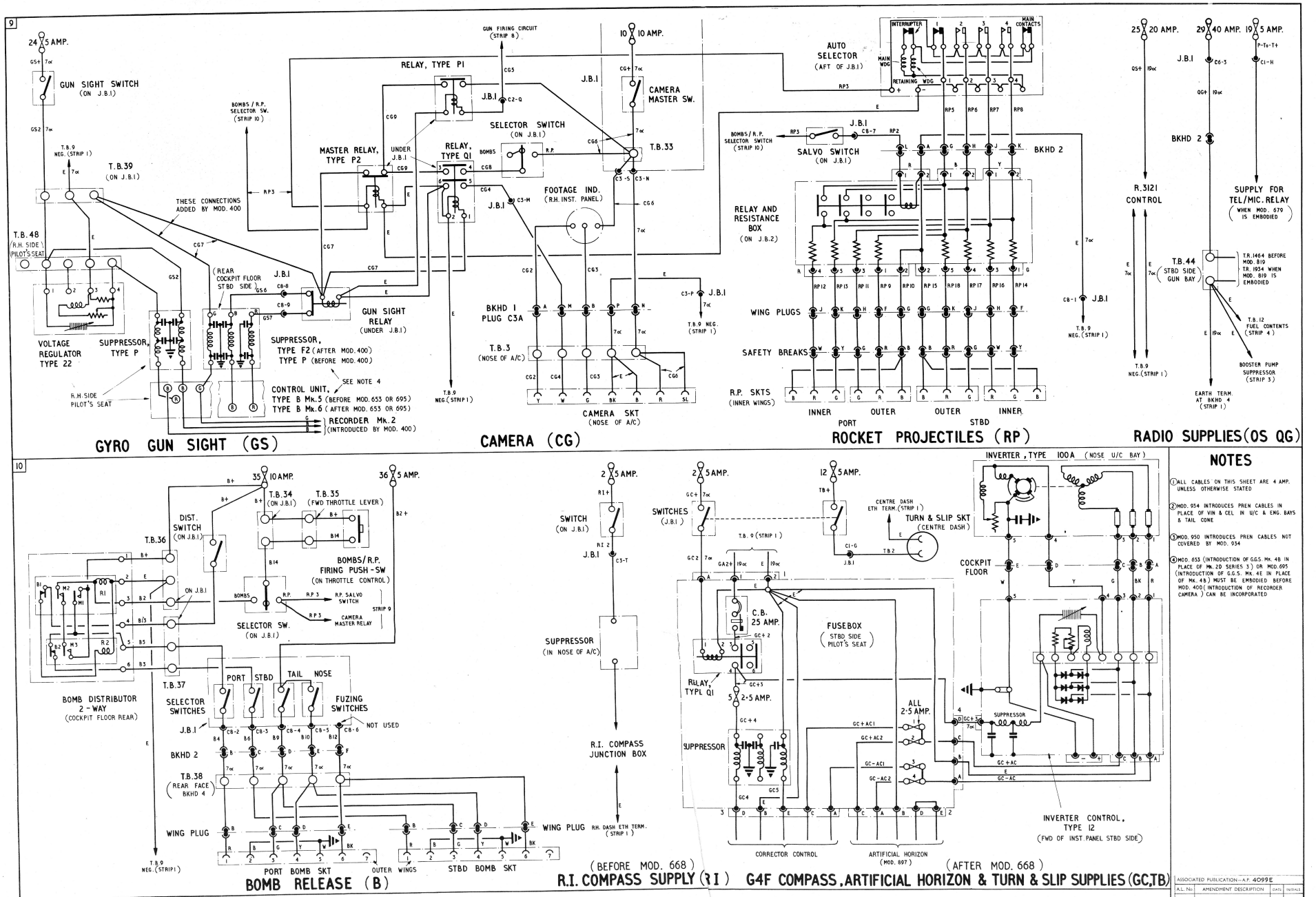

NOTES

1. ALL CABLES ON THIS SHEET ARE 4 AMP. UNLESS OTHERWISE STATED
2. MOD. 934 INTRODUCES PREN CABLES IN PLACE OF VIN & CEL IN U/C & ENG. BAYS & TAIL CONE
3. MOD. 950 INTRODUCES PREN CABLES NOT COVERED BY MOD. 934
4. MOD. 653 (INTRODUCTION OF G.G.S. Mk. 4B IN PLACE OF Mk. 2D SERIES 3) OR MOD. 695 (INTRODUCTION OF G.G.S. Mk. 4E IN PLACE OF Mk. 4B) MUST BE EMBODIED BEFORE MOD. 400 (INTRODUCTION OF RECORDER CAMERA) CAN BE INCORPORATED

VAMPIRE FB Mk.5 AND 9 – *ELECTRICAL INSTALLATION*

A.T.P.

ASSOCIATED PUBLICATION — A.P. 4099E

A.L. No.	AMENDMENT DESCRIPTION	DATE	INITIALS

AIR DIAGRAM 4551 — SHEET No. 5 — No. OF SHEETS 6 — ISSUE 3 — JULY 1951

PREPARED BY THE MINISTRY OF SUPPLY FOR PROPULSION & AIR MINISTRY

INTRODUCING ISSUE 3 SUPERSEDING PREVIOUS ISSUES

RESTRICTED

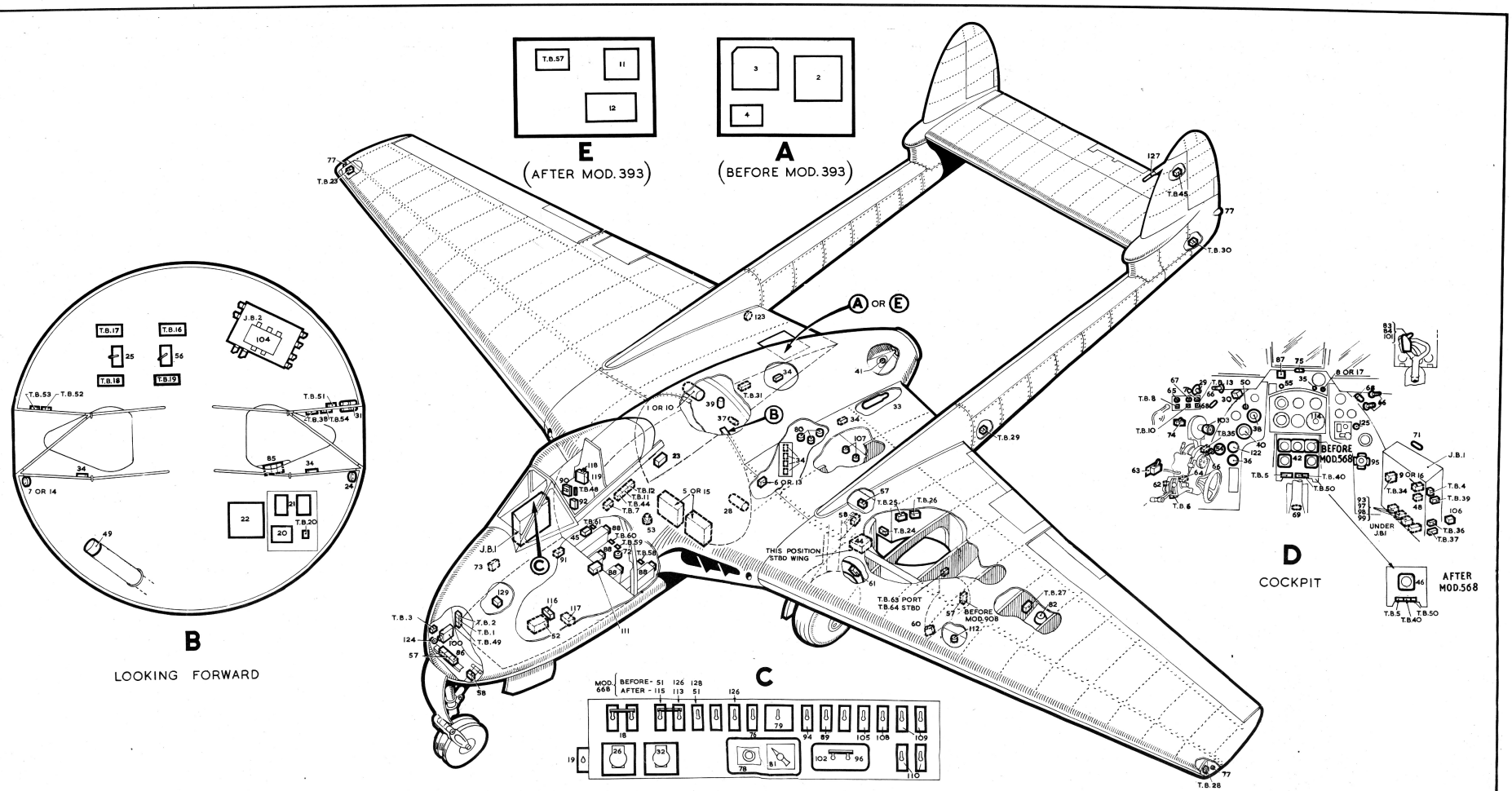

POWER SUPPLY (BEFORE MOD. 393)

		ZONE
1	GENERATOR, TYPE KX	K.20
2	GENERATOR SUPPRESSOR, TYPE W1	INSET A
3	VOLTAGE REGULATOR, TYPE F24	INSET A
4	CUT-OUT, TYPE D	INSET A
5	BATTERY 24V. 25 AMP. HR	H.19,H.20
6	GROUND/FLIGHT SWITCH	I.22
7	GROUND TEST SOCKET	INSET B
8	POWER FAILURE WARNING LAMP	INSET B
9	RECTIFIER AND RESISTANCE	INSET D

POWER SUPPLY (AFTER MOD. 393)

		ZONE
10	GENERATOR, TYPE HX2	K.20
11	SUPPRESSOR, TYPE Y	INSET E
12	VOLTAGE REGULATOR AND CUT-OUT UNIT, TYPE A	INSET E
13	GROUND/FLIGHT SWITCH	I.22
14	GROUND TEST-SOCKET	INSET B
15	BATTERY 24V. 25 AMP. HR	H.19,H.20
16	RECTIFIER AND RESISTANCE	INSET D
17	POWER FAILURE WARNING LAMP	INSET D

ENGINE SERVICES

STARTING AND BOOSTER COILS

		ZONE
18	MASTER SWITCHES (3)	INSET C
19	AUXILIARY STARTING SWITCH	INSET C
20	TIME SWITCH (STARTER PANEL)	INSET B
21	RELAYS (2) (STARTER PANEL)	INSET B
22	RESISTANCE (STARTER PANEL)	INSET B
23	SLOW ENGAGEMENT RELAY	I.19
24	STARTER SOCKET	INSET B
25	SAFETY MICRO SWITCH	INSET B
26	LIGHT SWITCH	INSET C
27	FUEL PRESSURE SWITCH (IF FITTED)	POSITION NOT FINALISED
28	STARTER MOTOR	I.21
29	RE-LIGHT SWITCH	INSET D
30	BOOSTER COIL RELAY	INSET D
31	BOOSTER COILS (2)	INSET B

FIRE EXTINGUISHER AND FIRE WARNING

		ZONE
32	EXTINGUISHER PUSH-SWITCH	INSET C
33	EXTINGUISHER BOTTLE	K.24

ENGINE SERVICES (Cont.)

FIRE EXTINGUISHER & FIRE WARNING (Cont.)

		ZONE
34	FLAME SWITCHES (4 BEFORE MOD. 844) (12 AFTER MOD. 844)	INSET B, L.31, K.23, I.22, I.22
35	WARNING LAMP	INSET D

MISCELLANEOUS

		ZONE
36	OIL TEMPERATURE INDICATOR	INSET D
37	OIL TEMPERATURE BULB	K.20
38	TACHOMETER INDICATOR	INSET D
39	TACHOMETER GENERATOR	K.20
40	EXHAUST GAS THERMOMETER INDICATOR	INSET D
41	EXHAUST GAS THERMOCOUPLE	L.24

FUEL SYSTEM

		ZONE
42	CONTENTS INDICATOR(S5) (BEFORE MOD. 568)	INSET D
43	CONTENTS TRANSMITTER(S5) (BEFORE MOD. 568)	IN TANKS
44	CONTENTS POWER UNIT (AFTER MOD. 568)	G.24
45	CONTENTS RECTIFIER UNIT (AFTER MOD. 568)	INSET D
46	CONTENTS INDICATOR (AFTER MOD. 568)	INSET D
47	CONTENTS TRANSMITTER (AFTER MOD. 568)	IN TANKS
48	PRESSURE WARNING RESISTANCE	INSET D
49	PRESSURE WARNING PRESSURE SWITCH	INSET B
50	PRESSURE WARNING LAMP	INSET D
51	BOOSTER PUMP SWITCH	INSET C
52	BOOSTER PUMP SUPPRESSOR, 4 TYPE P1	E.15
53	BOOSTER PUMP	H.18

UNDERCARRIAGE

		ZONE
54	INDICATOR	INSET D
55	WARNING LAMP	INSET D
56	THROTTLE MICRO SWITCH	INSET B
57	UP MICRO SWITCHES (6 BEFORE MOD. 908) (4 AFTER MOD. 908)	H.24, F.27, E.13
58	LEG LOCK MICRO SWITCHES (3)	H.24, D.14
59	DOWN MICRO SWITCHES (3) (AFTER MOD. 908)	POSITION NOT FINALISED
60	DOOR MICRO SWITCHES (2) (AFTER MOD. 908)	E.36
61	LEVER LOCK COMPRESSION LEG MICRO SWITCH	G.24
62	LEVER LOCK MICRO SWITCH	INSET D
63	OVERRIDE SWITCH	INSET D
64	LEVER LOCK SOLENOID	INSET D

INTERIOR LIGHTING

		ZONE
65	U.V. LAMPS DIMMER	INSET D
66	U.V. LAMPS (4)	INSET D
67	RED FLOODLAMPS DIMMER	INSET D
68	RED FLOODLAMPS (2)	INSET D
69	CONTROL COL. FLOODLAMP	INSET D
70	J.B.1 FLOODLAMP DIMMER	INSET D
71	J.B.1 FLOODLAMP	INSET D
72	GUN COMPARTMENT LAMP	G.7
73	EMERGENCY LAMP BATTERY	G4
74	EMERGENCY LAMP SWITCH	INSE D
75	EMERGENCY LAMP	INSE D

EXTERIOR LIGHTING

		ZONE
76	NAVIGATION LAMPS SWITCH	INSE C
77	NAVIGATION LAMPS (3)	K.10, B.33, I.1
78	IDENTIFICATION LAMPS PUSH-SWITCH	INSE C
79	IDENTIFICATION LAMPS SELECTOR SWITCH	INSE C
80	IDENTIFICATION LAMPS (5)	I.22, J
81	LANDING LAMP SWITCH	INSE C
82	LANDING LAMP	E.

GUN FIRING, GUN SIGHT AND CAMERA

GUNS

		ZONE
83	SAFETY SWITCH	INSET D
84	GUNS FIRING SWITCH	INSET D
85	RELAYS, TYPE P1 OR Q1 (3)	INSET B
86	SAFETY MICRO SWITCH	D.13
87	ROUNDS COUNTER (IF FITTED)	INSET D
88	FIRING SOLENOIDS (4)	G.17, G.18, H.17

GUN SIGHT

		ZONE
89	SWITCH	INSET C
90	VOLTAGE REGULATOR, TYPE 22	E.16
91	SUPPRESSOR, TYPE F2	G.16
92	SUPPRESSOR, TYPE P	H.16
93	RELAY	INSET D

CAMERA

		ZONE
94	MASTER SWITCH	INSET C
95	FOOTAGE INDICATOR	INSET D

GUN FIRING, GUN SIGHT AND CAMERA (Cont.)

CAMERA (Cont.)

		ZONE
96	SELECTOR SWITCH	INSET C
97	MASTER RELAY, TYPE P2	INSET D
98	RELAY, TYPE Q1	INSET D
99	RELAY, TYPE P1	INSET D
100	CAMERA	E.13
101	PUSH-SWITCH	INSET D

ROCKET PROJECTILES AND BOMBS

		ZONE
102	R.P./BOMBS SELECTOR SWITCH	INSET C
103	R.P./BOMBS FIRING PUSH-SWITCH	INSET D

ROCKET PROJECTILES

		ZONE
104	RELAY AND RESISTANCE BOX	INSET B
105	SALVO SWITCH	INSET C
106	AUTO SELECTOR	INSET D
107	FIRING SOCKETS (4)	J.24

BOMBS

		ZONE
108	DISTRIBUTOR SWITCH	INSET C
109	SELECTOR SWITCHES (2)	INSET C
110	FUZING SWITCHES (2)	INSET C
111	DISTRIBUTOR	G.17
112	RELEASE SOCKETS (2)	E.36

G4F COMPASS, ARTIFICIAL HORIZON AND TURN AND SLIP (AFTER MODS. 668 AND 897)

		ZONE
113	TURN AND SLIP SWITCH	INSET C
114	TURN AND SLIP INDICATOR	INSET D
115	COMPASS SWITCH	INSET C
116	INVERTER CONTROL, TYPE 12	F.16
117	INVERTER, TYPE 100A	E.16
118	CIRCUIT BREAKER	I.17
119	FUSE 5A	I.17
120	SUPPRESSOR	I.17
121	RELAY	INSIDE ITEM 119
		INSIDE ITEM 119

MISCELLANEOUS

		ZONE
122	FLAP INDICATOR	INSET D
123	FLAP TRANSMITTER	N.21
124	CABIN PRESSURE WARNING VALVE	E.13
125	CABIN PRESSURE WARNING LAMP	INSET D
126	PRESSURE HEAD HEATER SWITCH	INSET D
127	PRESSURE HEAD HEATER	E.15
128	R.I. COMPASS SWITCH (BEFORE MOD. 668)	INSET C
129	R.I. COMPASS SUPPRESSOR (BEFORE MOD. 668)	F.14

JUNCTION BOXES

		ZONE
J.B.1		INSET D
J.B.2		INSET B

TERMINAL BLOCK

	ZONE		ZONE
1	E.13	30	O.33
2	E.13	31	N.21
3	E.13	32	IN J.B.1
4	INSET D	33	INSET D
5	INSET D	34	INSET D
6	INSET D	35	INSET D
7	H.17	36	INSET D
8	INSET D	37	INSET D
9	IN J.B.1	38	INSET B
10	INSET D	39	INSET D
11	I.18	40	INSET D
12	I.18	41	IN J.B.2
13	INSET D	42	IN J.B.2
14	IN J.B.2	43	IN J.B.2
15	IN J.B.2	44	I.18
16	INSET B	45	Q.16
17	INSET B	46	I.16
18	INSET B	47	E.13
19	INSET B	48	INSET D
20	INSET B	49	INSET B
21	AS T.B.25 STBD	50	INSET B
22	AS T.B.26 STBD	51	INSET B
23	Q.24	52	INSET B
24	H.24	53	INSET B
25	H.25	54	INSET B
26	H.25	55	INSET B
27	F.38	56	INSET E
28	A.33	57	G.18
29	I.27	58	G.18
		59	G.19
		60	H.17
		61	H.17
		62	G.26
		63	AS T.B.63 STBD
		64	

VAMPIRE FB Mk.5 AND 9 – *Electrical Installation*

A.T.P.

RESTRICTED

ASSOCIATED PUBLICATION – A.P. 4099E			
A.L. No.	AMENDMENT DESCRIPTION	DATE	INITIALS

AIR DIAGRAM 4551	SHEET No. 6 / No. OF SHEETS 6	PREPARED BY THE MINISTRY OF SUPPLY FOR PROMULGATION BY AIR MINISTRY
ISSUE 3	JULY 1951	

INTRODUCING ISSUE 3 SUPERSEDING PREVIOUS ISSUES