RRAF/FORM/2516

RRAF TECHNICAL ORDERS

INDEX SHEET

Volume Title: AIRFRAME Volume No: 3

Section Title: VAMPIRE Section No: 2

Sub-Sect Title: S.T.Is. Sub-Sect No: D

Order Title or Subject Matter	~~Modification~~, STI ~~or SI~~ No, etc	Order No	Issue No 1	2	3	4	5
MAIN HYDR. ACCUMULATOR – USE OF BONDED SEAL WASHERS IN PLACE OF ALUMINIUM CRUSH WASHERS	STI/VAMP/R.30	114	✓				
PORT & STBD UNDERCARRIAGE LEG LOCK MICRO SWITCHES – INCORRECT ROUTING OF WIRING	VAMP/R.31	115	✓				
PAINTING OF COCKPIT FLOOR (REAR) WHITE	VAMP/R32	116	✓				
MAIN WHEEL RETAINING NUT LOCKING INTRO 2BA BOLT IN LIEU OF 3/16 SPLIT PIN	VAMP/R33	117	✓				

RRAF/FORM/2516

RRAF TECHNICAL ORDERS

INDEX SHEET

Volume Title: VAMPIRE Volume No: 3

Section Title: AIRFRAME Section No: 2

Sub-Sect Title: S.T.I.'s Sub-Sect No: D

Order Title or Subject Matter	Modification, STI pr SI No, etc	Order No	Issue No 1	2	3	4	5
CONSTANT SWITCH LEADS — CHAFED BY INST. PANEL.	SI/VAMP/197A	D.113					

R.R.A.F. TECHNICAL ORDERS

AMENDMENT RECORD SHEET

TO:- VOLUME:-...3..... SECTION:-.....2..... SUB SECTION..D.....

R.R.A.F. TECH ORDER NO.	AMENDMENT NUMBER RECEIVED				

NOTE: 1. This Index to Amendments issued, is to be inserted behind the Index Sheet of each Section & Sub. Section of all Volume of Technical Orders.

2. Amendements are to be entered in the columns provided from left to right immediately on receipt, and the Amendment attached to the applicable Technical Order.

FROM : Headquarters (Tech)
Rhodesian Air Force

Technical Staff Instruction
Vol 3 Sect 2 Sub Sect D117
(Issue 1)

TO : New Sarum
Thornhill
OC Central Equipt Depot
AIS

COPY TO : D EQ
TRG 2
No. 1 GTS

DATE : June 1975

This TSI is issued in accordance with TSI Vol I No. 2 Issue 10

A. SPECIAL TECHNICAL STAFF INSTRUCTION VAMP/R33
MAINWHEEL RETAINING NUT LOCKING
INTRO 2BA BOLT IN LIEU OF 3/16 SPLIT PIN

B. Vampire T Mk 11 Aircraft.

C. To standardise the servicing with Vampire FB 9 aircraft and to prevent damage to the mainwheel retaining nut the 3/16" split pin is to be replaced with a 2BA Bolt, washer and stiff nut.

D. This is a "D" class instruction. At the first opportunity not later than the next primary servicing the 3/16" split pin 28P.12366 securing the retaining nut (27M.7937) for the mainwheel, is to be replaced by a 2BA bolt 28D 1011024, washer 28W 9128924, and stiff nut 28M 10328.

E. Record on appropriate forms.

F. Nil.

G. Nil.

(M. Hamence)
Air Lieutenant
Engineer II

SOURCE : HQ/101/3/1 Vol V M6

cb

Two HQ

From : Headquarters (Tech)
Rhodesian Air Force

Technical Staff Instruction
Vol 3, Sect 2, Sub-Sect D116
(Issue 1)

To : New Sarum
Thornhill
OC CED
AIS CED

Copy to: SOEQ
TRG 2
No 1 GTS, NS

Date : 21 December 1972

This TSI is issued in accordance with TSI Vol 1, No 2, Issue 10

A. SPECIAL TECHNICAL INSTRUCTION/VAMPIRE/R32
PAINTING OF COCKPIT FLOOR (REAR) WHITE

B. All Vampire T.11 aircraft.

C. To aid loose article detection and maintain cleanliness of the cockpit floor (rear), the floor from the leg restraining strap attachment points to the cockpit rear bulkhead is to be painted white.

D. 1. On an opportunity basis but not later than the next Minor/Major servicing, whichever is the soonest proceed as follows :

a. Airframe Fitter

(i) Remove the canopy hatch IAW AP 4099J, Vol 1, Sect 3, Chap 1, para 17.

b. Armament Fitter

(i) Remove Port and Starboard Safety Equipment and Ejection Seats complete with rails IAW AP 4099J, Vol 5, Part 1, Book 3, Sect 1, SP 51.

c. Instrument Fitter

(i) Remove the port and starboard oxygen economiser bags and blank off the pipe lines.

d. Airframe Fitter

(i) Clean cockpit floor using suitable cleaning fluid.

(ii) Using white enamel paint 33A/9431495 paint the cockpit floor from the leg restraining straps attachment points to the cockpit rear bulkhead.

(iii) Allow paint to dry for approximately 24 hours.

e. Instrument Fitter

(i) Refit port and starboard oxygen economisers and carry out test for leaks and flow check using a MK.3 Economiser ground tester.

(ii) Replenish oxygen system.

f. Armament Fitter

(i) Refit port and starboard ejection seats and safety equipment IAW AP 4099 J Vol 5, Part 1, Book 3, Sect 1, SP 52.

(ii) Carry out independent checks IAW AP 4099J Vol 5, Part 1, Book 3, Section 2, AP 212.

g. Airframe Fitter

(i) Refit canopy hatch IAW AP 4099 J, Vol 1, Sect 3, Chap 1, para 18.

2. Estimated time: 6 man hours plus 24 hours paint drying time.

E. Record on Forms 700 and 4801.

F. Nil.

G. Nil.

(J.A. Scatcherd)
Air Lieutenant
ENGINEER II

SOURCE: HQ/101/3/ENG Encl 134.

FROM : Headquarters (Tech)
Rhodesian Air Force

TO : New Sarum
Thornhill
OC Central Equipt Depot
AIS CED

COPY TO : SO EQ
TRG 2

DATE : 30th November 1971

Rhodesian Air Force
Technical Staff Instruction
Vol 3 Sect 2 Sub Sect D 115
(Issue 1)

This TSI is issued in accordance with TSI Vol 1 No 2 Issue 9.

(A) SPECIAL TECHNICAL INSTRUCTION/VAMPIRE/R31
PORT AND STARBOARD UNDERCARRIAGE LEG LOCK MICRO SWITCHES - INCORRECT ROUTING OF WIRING

(B) Vampire T.11 aircraft.

(C) A case has occurred of an undercarriage leg lock micro switch, situated on the radius rod upper link, loosing location due to fouling of the wiring by the lock plate spring upper retaining lug on latch plate.

(D)1 This is a Class 'A' Instruction. Immediately upon receipt of this Instruction proceed as follows:

a. Refer to Technical Staff Instructions Vol 3 Sect 2 Sub Sect B 100 (Issue 1).

b. Ensure that the micro switch wiring is routed and secured as laid down in paragraph 8(2) sub paragraphs (f) and (g) of the above leaflet.

2 AP 4099 J Vol 5 Pt 1 Bk 3 Sect 4 Chap 3 SP 503 will be amended to include relevant details of routing and security of leg lock micro switch wiring.

(E) Record satisfaction of this instruction in F.700's and on F.4801's.

(F) Nil.

(G) Nil.

(J.A. Scatcherd)
Air Lieutenant
Engineer 3

SOURCE : HQ/104/3/2/ENG ENC 19

FROM : Headquarters (Tech)
Rhodesian Air Force

TO : New Sarum
Thornhill
OC Central Equip Depot
OC AIS

COPY TO : SO EQUIP
TRG 2

DATE : 23rd NOVEMBER 1971

Rhodesian Air Force
Technical Staff Instruction
Vol 3, Sect 2, Sub-Sect D114
(Issue 1)

This TSI is issued in accordance with TSI Vol 1, No 2, Issue 9

(A) SPECIAL TECHNICAL INSTRUCTION/VAMPIRE/R30

MAIN HYDRAULIC ACCUMULATOR - USE OF BONDED SEAL WASHERS (28F/9429532) IN PLACE OF ALUMINIUM CRUSH WASHERS (28F/9649)

(B) Vampire T Mk 11 Aircraft.

(C) A case has occurred of a leak developing between the crush washers (28F/9649) and the banjo union of the main hydraulic accumulator resulting in loss of fluid to hydraulic services.

(D) 1. This is a Class 'D' Instruction. Within 3 months of receipt of this Instruction proceed as follows:

a. Release accumulator pressure.

b. Remove crush washers, Qty 2 (28F/9649) and fit bonded seal washers (28F/9429532).

c. Inflate accumulator, check for leaks and carry out necessary functional checks.

(E) Record on appropriate forms.

(F) Nil.

(G) Nil.

(J.A. SCATCHERD)
Air Lieutenant
Engineer 3

SOURCE : HQ/101/3/2/ENG Enc 54

Elec

FROM : Headquarters(Tech)
Rhodesian Air Force

Rhodesian Air Force
Technical Staff Instruction
Vol 3, Sect 2, Sub Sect D113
(Issue 1)

TO : New Sarum
Thornhill
OC Central Equipt Depot
AIS CED

COPY TO : SESO
TRG 2

DATE : 1st February 1971.

This TSI is issued in accordance with TSI Vol 1, No. 2. Issue 9.

(A) Special Technical Instruction/Vampire/197A
Gunsight Switch Leads : Chafed by Instrument Panel.

(B) Vampire T. Mk.11 Aircraft.

(C) A case has been reported of a port gunsight switch bursting into flames during flight. The cause was attributed to the positive lead on the gunsight switch being chafed by the instrument panel.

(D) 1. At the next Primary Servicing proceed as follows:

a. Lower the main instrument panel and examine all the leads of the port and starboard gunsight switches. Renew any chafed lead and tape the loom adjacent to instrument panel using adhesive PVC tape (32D/CED NIV 173)

b. File the panel edge to a full 180° radius along the top edge and down each side for a distance of 2 inches from each top corner.

c. Renew protective treatment and reassemble the instrument panel.

Estimated Man hours : 2 (Plus rectification time).

(E) Record on the appropriate forms.

(F) Nil.

(G) Nil.

(A.D. Steel)
Flight Lieutenant
Engineer 2.

SOURCE : AIRFORCE HEADQUARTERS.

1WHR

FROM : Headquarters(Tech)
Rhodesian Air Force

TO : New Sarum
Thornhill
OC Central Equipt Depot
AIS CEP

COPY TO : SESO
TRG 2

DATE : 1st February 1971.

Rhodesian Air Force
Technical Staff Instruction
Vol 3, Sect 2, Sub Sect D113
(Issue 1)

This TSI is issued in accordance with TSI Vol 1, No. 2. Issue 9.

(A) Special Technical Instruction/Vampire/197A
Gunsight Switch Leads : Chafed by Instrument Panel.

(B) Vampire T. Mk.11 Aircraft.

(C) A case has been reported of a port gunsight switch bursting into flames during flight. The cause was attributed to the positive lead on the gunsight switch being chafed by the instrument panel.

(D) 1. At the next Primary Servicing proceed as follows:

a. Lower the main instrument panel and examine all the leads of the port and starboard gunsight switches. Renew any chafed lead and tape the loom adjacent to instrument panel using adhesive PVC tape (32B/CED NIV 173)

b. File the panel edge to a full 180° radius along the top edge and down each side for a distance of 2 inches from each top corner.

c. Renew protective treatment and reassemble the instrument panel.

Estimated Man hours : 2 (Plus rectification time).

(E) Record on the appropriate forms.

(F) Nil.

(G) Nil.

(A.D. Steel)
Flight Lieutenant
Engineer 2.

SOURCE : AIRFORCE HEADQUARTERS.

TWHQ

FROM : Headquarters (Tech)
Rhodesian Air Force

Rhodesian Air Force
Technical Staff Instruction
Vol 3 Sect 2 Sub Sect D112 (Issue 1).

TO : RHODAF New Sarum
RHODAF Thornhill
OC Central Equipt Depot
AIS CED

COPY TO : SESO
TRG 2

DATE : 15th January 1971

This TSI is issued in accordance with TSI Vol 1. No. 2. Issue 9.

(A) SPECIAL TECHNICAL INSTRUCTION/VAMPIRE/R29.
BOLT (28D/13114) AT RUDDER PEDAL LINKAGE (26FC/5074) FAILURE.

(B) All Vampire T11 Aircraft.

(C) A case has occurred of the failure of bolt (28D/13114) situated at the rudder pedal linkage (26FC/5074) (AP 4099J Vol 1. Sect 3. Chap 4. Fig. 14). Failure considered isolated case due to stress corrosion due to galvanic action.

(D) Within 7 days examine all aircraft and replace defective items using (28D/1214416) suitable reduced .1" in length with appropriate extension of thread.

(E) Record in form 700.

(F) All defects to be returned on F2128.

(G) Nil

(R.Evans)
Flight Lieutenant
Engineer 3.

SOURCE : HQ101/3/2 E 181.

FROM : Headquarters (Tech)
Royal Rhodesian Air Force

RRAF Technical Staff Instructions
Vol 3, Sect 2, Sub Sect D111 (Issue 1)

TO : RRAF New Sarum
RRAF Thornhill
OC Central Equipment Depot
AIS Central Equipment Depot

COPY TO : SESO
C MODS C

DATE : 2nd May 1969

This TSI is issued in accordance with RRAF TSI Vol 1, No 2, Issue 9.

A. SPECIAL TECHNICAL INSTRUCTION/VAMPIRE/206
PRESSURE HEAD BRACKET - CRACKING AT WELD

B. Vampire FB9 and T11 aircraft.

C. The Royal Australian Air Force have reported cases of cracks being found at the weld of both clamping lugs of the Pressure Head Bracket Part Number J00 1761A.

D. Within three months of the receipt of this Instruction proceed as follows:

a. Locate the pressure - static head which is situated at the top of the port tail fin and carry out a dye penetrant crack detection test.

b. If no defect is present, restore aircraft to normal.

c. Where any sign of a crack exists change the bracket for a serviceable item, or remove and repair.

Estimated man hours - 2.

E. Record on the appropriate form.

F. Form 2128 action is to be taken on all defective brackets.

G. Nil.

H. This instruction does not affect the operation or handling of the aircraft or equipment.

(G.P. Proudfoot)
Squadron Leader
CAIO

Source: AF/7542/66/6

FROM : Headquarters (Tech)
Royal Rhodesian Air Force

RRAF Technical Staff Instruction
Volume 3 Section 2 Sub Section 110
(Issue 1)

TO : RRAF New Sarum
RRAF Thornhill
OC CED

COPY TO: SESO
C MODS C

DATE : 15th November 1968

This T.S.I. is issued in accordance with RRAF T.S.I. Vol.1 No. 2 Issue 9.

(A) SPECIAL TECHNICAL INSTRUCTION/RRAF/VAMPIRE/28
CO-AXIAL CABLE - PACITOR FUEL GAUGE SYSTEM - ROUTING THROUGH ENGINE COMPARTMENT

(B) Vampire FB9 and T11 aircraft

(C) Several cases have occurred of partial and complete failure of Co-Axial cables (Sect.Ref.6A/2832, port and 6A/2833 stb'd) due to overheating caused by routing in close proximity to engine.

(D) At first opportunity, not later than next Primary Servicing proceed as follows :-

a. Ensure cables are cleated along side of fuselage from Rectifier (Sect.Ref.6A/4991), in main fuel tank bay through bulkhead No. 4 into port or stb'd side of engine compartment and by shortest possible route, avoiding acute bends, to the underside of port or stb'd Rib No. 1 to Socket Connector (Sect.Ref.10H/19397).

b. The Socket Connector is to be located under Rib No. 1, on the wing tank side of the rib and not in the engine compartment. The socket connector is covered by the Fairing, bottom rear, wing root port/ stb'd (26FC/222/452).

c. Excess length of cable is to be coiled and secured at the Rectifier in the main fuel tank bay.

(E) Record in Forms 700 and 4801.

(F) NIL.

(G) NIL.

(A.J. Rowe)
Squadron Leader
ENGINEER I

SOURCE : HQ/101/3/1/ENG (AF.G.)

FROM : Headquarters (Tech)
Royal Rhodesian Air Force

TO : RRAF New Sarum
RRAF Thornhill
OC Central Equipt Depot

COPY TO: SESO
C MODS C

DATE : 17th January 1968

RRAF Technical Staff Instruction
Vol.3.Sect.2.Sub.Sect.D.109
(Issue 1)

This TSI is issued in accordance with RRAF TSI Vol.1. No.2. Issue 9.

A. SPECIAL TECHNICAL INSTRUCTION/RRAF/VAMP/27
Dunlop Control Handles :
Security of Brake Lever Assembly

B. 1. Control Handle Assemblies installed in all Marks of Vampire aircraft.

2. Control Handles associated with the above aircraft held as spare or in store.

C. A case has been reported where the upper of two 'Umbrako' screws securing the brake lever assembly to the parking side of the control handle has become loose and fallen out. This resulted in the guide plate/brake lever rotating forward around the lower 'Umbrako' screw, severely restricting the brake lever movement. Insecurity of the screws is due to the absence of spring washers under the screw heads. Two similar screws are used to clamp the control handle to the control column.

D. 1. Within 7 days of receipt of this Instruction proceed as follows:

a. Inspect 'Umbrako' screws referred to at para C above for the presence of spring washers under screw heads.

b. Fit spring washers where they have been omitted.

Estimated Man Hours - 1

2. Equipment held as spare or in store is to be actioned as above before being brought into use or issue, as appropriate.

E. Record on the appropriate Forms.

F. Report cases of missing spring washers and location on Form 2128.

G. Nil.

H. This Instruction does not affect the handling or operation of the equipment.

(T.M. WESTON)
Wing Commander
S.O.T.C.

SOURCE: AF/7759/67

FROM : Headquarters (Tech)
Royal Rhodesian Air Force

RRAF Technical Staff Instruction
Vol.3.Sect.2.Sub.Sect.D.108 (Issue 1)

TO : RRAF New Sarum
RRAF Thornhill
OC Central Equipt Depot

COPY TO: SEIO
C MODS C

DATE : 26th October 1967

This TSI is issued in accordance with RRAF TSI Vol.1. No.2. Issue 9.

(A) Special Technical Instruction/RRAF/Vampire/26
Rod Connecting - Rudder Lever (Sect/Ref. 26FC/2597)
Incorrect Fit.

(B) Vampire F.B.9. and T.11 aircraft.

(C) Cases have been reported that the Rod Connecting Rudder Lever (26FC/2597) has been incorrectly fitted. The forward eye end of the rod is set at an angle to relieve side loadings on the bearing when the rudders are operated. HQ Signal T594 October 10th 1967 detailed rectification. In view of the large number of assemblies found incorrect and the fact that the Volume 1. does not draw attention to the possibility of incorrect fitment it is proposed to stencil a warning notice on the tail boom adjacent to the rear inspection panels, after an examination has been carried out to ensure correct fitment.

(D) This is a Class C Instruction. Within 28 days of receipt on in use aircraft, and before issue of aircraft from storage, proceed as follows.

a. Locate and remove the rear inspection panels, port and starboard booms.

b. Using a torch and mirror check the Rod Connecting for correct fitment. The rods should be fitted with the forward eye end parallel to the Rudder Control Lever and incline to port when viewed from the rear, with the rudders neutral.

c. Where the rods are found incorrectly fitted, remove and carry out an Ardrox crack examination, replace and refit as necessary. This will necessitate an Independent Check in accordance with RRAF AP 3158 Leaflet B8 and subsequent air test.

d. Refit rear inspection panels.

e. Stencil on the tail booms adjacent to the rear inspection panels, using 1" block characters, the following :

WARNING
ROD CONNECTING RUDDER LEVER-
26FC/2597 - FIT IS CRITICAL
STI/RRAF/V/26 REFERS

NOTE: All in use T11 aircraft have been checked, therefore para (D) a. to d. will not apply.

2/.....

(E) Record in Forms 700 and 4801.

(F) Nil.

(G) Nil.

(S.G. HO IE)
Squadron Leader
Engineer I

SOURCE: HQ/101/3/2/ENG (AF.G).

FROM : Headquarters (Tech)
Royal Rhodesian Air Force

TO : RRAF New Sarum
RRAF Thornhill
OC Central Equip Depot

COPY TO : SESO
C MODS C

DATE : 25th August 1967

RRAF Technical Staff Instruction
Vol 3, Section2, Sub Sect D.107 (Issue I)
cancelling
Vol 3, Section2, Sub Sect E.98 (Issue I)

This TSI is issued in accordance with RRAF TSI Vol.1. No.2. Issue 9.

(A) Special Technical Instruction/RRAF/Vampire/25
Main undercarriage - Radius rod needle roller housings (Pt No.G.0072) - Loose (Cancelling Servicing Instruction/RRAF/Vampire/54)

(B) Vampire FB9 and T11 aircraft.

(C) Cases have been reported of needle roller housings (Pt. No.G.0072) loosening from the jack operating sleeve (Pt. No.G.001979A) and the upper link (Pt. No.G.001983/B4A), causing mal-alignment of the operating mechanisms. Action under the authority of S1/RRAF/Vampire/54 has not rectified this defect. It is now proposed to retain the needle roller housings using Loctite Grade D (35H/175).

(D) This is a Class B Instruction. At the first convenient opportunity, not later than next Minor/Major Servicing proceed as follows :

(a) Jack and trestle aircraft in accordance with applicable Volume 1.

(b) Remove main undercarriage radius rod assemblies, port stb'd in accordance with applicable Volume 1.

(c) Dismantle, clean and examine assemblies.

(d) Refit needle roller housings to upper links and jack operating sleeves using Loctite Grade D (35H/175) in accordance with AP 2662B, Section 4, Chapter 4, scheme 4.2.22.
NOTE : The use of Loquic activator (35H/177) is considered essential.

(e) Refit assembled radius rod assemblies to aircraft, grease, ensuring that grease is extruded from both the upper links and jack operating sleeves.

(f) Carry out retraction tests.

(g) Remove trestles and jacks.

(E) Record in Form 700 and Form 4801.

(F) Nil.

(G) Nil.

/(H) ....

(H) The requirements of S1/RRAF/Vampire/54 will be deleted from the Servicing Schedule.

(H.A. Watson)
Squadron Leader
A/Engineer I)

Source: HQ/101/3/1/RRG Encl. 83(AP.G)

FROM : Headquarters (Tech)
Royal Rhodesian Air Force

RRAF Technical Staff Instruction
Vol.3.Sect.2.S.Sect.~~E.99.~~ (Issue 1).
D.106. (Issue 1.

TO : RRAF New Sarum
RRAF Thornhill
OC Central Equipt Depot

AL. 123

COPY TO: SESO
C MODS C

DATE : 26th July 1965

This TSI is issued in accordance with RRAF TSI Vol.1. No.2. Issue 8.

AL. 1233

(A) ~~Servicing Instruction~~ STI/RRAF/Vampire/~~55~~ 24
Tailplane Front Spar: End Fitting: Cracking.

(B) 1. Vampire FB9 and T.11 aircraft.

2. Tailplane assemblies (Stores Ref. 26FC/6782) held as spare or in store.

(C) A case has been reported of cracking of the tailplane front spar end fitting (Pt. No. J00585 or 12TP 265ND). from the top fixing hole to the serrated locating boss.

(D) 1. This is a Class D Instruction. At the next Minor Servicing ~~and subsequently at Major Servicing~~ proceed as follows :-

AL 1233

a. Remove the tailplane in accordance with current procedure.

b. Locate the tailplane front spar end fittings (Pt. No. J.00585 or 12TP.265ND) and using an approved chemical paint remover, clean off the surface finish of the fittings.

c. Carry out an Ardrox crack detection test on the fittings.

d. Where fittings are found uncracked no further action other than renewal of surface finish, and subsequent examination at Major Servicing, which is included in Servicing Schedule.

AL 1233.

e. Where fittings are found cracked they are to be replaced.

NOTE: The effective length of the tailplane is to be checked before and after repair/replacement of end fittings.

f. Refit tailplane.

2. Tailplane assemblies quoted in Para (B) 2 are to be examined in accordance with para (D) 1 b. and c. before installation.

(E) Record initial compliance in Form 700 ~~and enter in the Supplementary Servicing Record Sheet~~. 4801 and 4805 AL 1234

(F) Defects found are to be reported in accordance with current procedure.

(G) Nil.

(D.B. MILES)
Squadron Leader
Engineer I

SOURCE: RRAF Form 2128 AWS 6/65 (AF.G).

A55

FROM : Headquarters (Tech). Royal Rhodesian Air Force

TO : R.R.A.F. New Sarum
R.R.A.F. Thornhill
O.C. Central Equipt. Depot

COPY TO: S.E.S.O.
C. MODS. C.

DATE : 18th September, 1963.

R.R.A.F. Technical Staff Instruction
Vol.3, Sect. 2, Sub-Sect. D.105(Iss.1)
Cancelling Vol.3, Sect.2, SubSect.E.45

This T.S.I. is issued in accordance with R.R.A.F. T.S.I. Vol.1. No.2. Issue 8.

(A) Special Technical Instruction/RRAF/Vampire/23
Fairing Compression leg (Stores Ref.26FC/1057) Adjustment

(B) Vampire FB.9 aircraft.

(C) A case has been reported of the inboard bracket on the Nose Leg Fairing (Stores Ref. 26FC/1057) carrying the blocks into which the Eye Bolts (Part No. G.00653) are screwed, cracking, and of considerable wear taking place between the fuselage nose and the port and starboard sides of the fairing above the forward attachment points due to maladjustment.

On investigation it was found that the Eye Bolts were screwed right into the blocks and on attempting to offer up the Fairing with the nose wheel in the down position, the attachment eye bolts were too short, but when the nose wheel was partly retracted it was easy to offer up the fairing. On lowering the nose wheel with the fairing in place and the forward attachment points disconnected it was found that the stiffener plate (Part No. G.00589) fitted between the two rear attachment eye bolts fouled against the nose wheel leg flange carrying the rear attachment fork ends, at the same time forcing the fairing against the nose.

With the fairing fitted as above and fouling occurring, the blocks carrying the attachment eye bolts are forced away from the inboard bracket, thereby fracturing the bracket.

(D) At the earlist opportunity, not later than the next Primary Servicing, and whenever the Compression Leg Fairing is replaced, proceed as follows:-

(a) Adjust the eye bolts until the fairing is a close fit on the surrounding structure when the undercarriage is retracted.

(b) With the undercarriage down ensure that the Stiffener (Pt.No.G.00589) does not foul the Nose wheel leg flange carrying the rear attachment fork ends.

(E) Record initial compliance in Form 700 and Form 4801.

(F) Nil

(G) Nil

(G.W. FORSGATE)
Flying Officer
Engineer III

SOURCE: H.Q. R.R.A.F.(AF)

1155

FROM : Headquarters (Tech). Royal Rhodesian Air Force

TO : R.R.A.F. New Sarum
R.R.A.F. Thornhill
O.C. Central Equipt. Depot

COPY TO: S.E.S.O.
C. MOSS. C.

DATE : 27th August, 1963.

R.R.A.F. Technical Staff Instruction
Vol.3, Sect.2, Sub-Sect.D104 (Issue 1)
Superseding and Cancelling:-
Vol.3, Sect.2, Sub-Sect.E.92 (Issue 1)

This T.S.I. is issued in accordance with R.R.A.F. T.S.I. Vol.1. No.2. Issue 8.

A. Special Technical Instruction/RRAF/VAMPIRE/22
Cable Aileron Balance.Pt.No. K.00453 Mk.20, Chafing

B. Vampire FB9 and T11. Aircraft.

C. A case has occurred of Cable Aileron Balance Pt. No. K00453A Mk.20 chafing adjacent to Plate cover, Pt. No. D006983A Port and D.006984A Stbd. at Aileron Lower Hinge.
The Chafing is attributable to the fitting of an extra long 2BA countersunk screw (the correct screw is 28S/9140929).

D This is a Class "B" Instruction - At earliest opportunity, but not later than [illegible] days proceed as follows: -

(a) Check length of two 2 BA screws securing forward edge of plate to mainplane.

(b) Screws with shank length in excess of 3/8" are to be discarded and replaced by correct screw (Stores Ref.28S/9140929).

NOTE: Where correct screws are not immediately available, incorrect screws may be cut to length.

(c) Check Aileron balance cables with Ailerons operated to extreme positions. Replace chafed cables.

(d) Adjacent to holes where critical screw length is required paint in red letters 3/4" high "CAUTION" STI/RRAF/VAMP/22 refers.

E. Record initial compliance in Form 700 and Form 4801.

F. Nil

G. Nil.

(G.W. FORSGATE)
Flying Officer
Eng. III

SOURCE: [illegible]/Eng.(AF)

A. Special Technical Instruction/Vampire/203.
Electrical Cable GA.10. : Chafing on Rudder Control Cable.

B. Vampire T.11. (12)

C. A case has been reported of a Rudder control cable chafing the Main Electrical supply cable GA.10, situated outboard of the starboard ammunition box, causing the rudder control cable to be severed by arcing.

D. This is a Class 'C' Instruction. Within 28 Days of the receipt of this Instruction proceed as follows:-

(a) Check aircraft and where a Marconi cable strap, Type W.26099/C, is fitted on the outer wall of the starboard ammunition box no further action, other than recording, is necessary.

(b) Where no strap is fitted, remove the 9 inches P.V.C. wrapping from the cable loom just above the floor, make up a spruce block and strap assembly and fit as shown in the attached Drawing R.15N.107.

Estimated Man Hours: To check : Negligible
: To Make & Fit Strap: 3

E. Record on the appropriate form.

F. Nil.

G. Nil.

411
412.

Signed: (T.M. WESTON)
Flight Lieutenant,
ENG II

SOURCE: A.M. S.T.I.

Technical Wing,
Royal Rhodesian Air Force,
New Sarum.

R.R.A.F. Technical Staff Instruction
Vol.3. Sect.2. Sub-Sect.D.103(Issue 1)

Date: 4th October, 1962.

This T.S.I. is issued in accordance with R.R.A.F. T.S.I. Vol.1.No.2.Iss. 7

A. Special Technical Instruction/Vampire/203.
Electrical Cable GA.10. : Chafing on Rudder Control Cable.

B. Vampire T.11.

C. A case has been reported of a Rudder control cable chafing the Main Electrical supply cable GA.10, situated outboard of the starboard ammunition box, causing the rudder control cable to be severed by arcing.

1. This is a Class 'C' Instruction. Within 28 days of the receipt of this Instruction proceed as follows: -

(a) Check aircraft and where a Marconi cable strap, Type W.26099/C, is fitted on the outer wall of the starboard ammunition box no further action, other than recording, is necessary.

(b) Where no strap is fitted, remove the 9 inches P.V.C. wrapping from the cable loom just above the floor, make up a spruce block and strap assembly and fit as shown in the attached Drawing R.15N.107.

Estimated Man Hours : To check : Negligible.
: To make & Fit Strap: 3

E. Record on the appropriate form.

F. Nil.

Nil.

(B.F. GERICKE)
Squadron Leader,
Officer Commanding
Technical Wing
Royal Rhodesian Air Force
New Sarum

SOURCE: A.N. S.T.I.

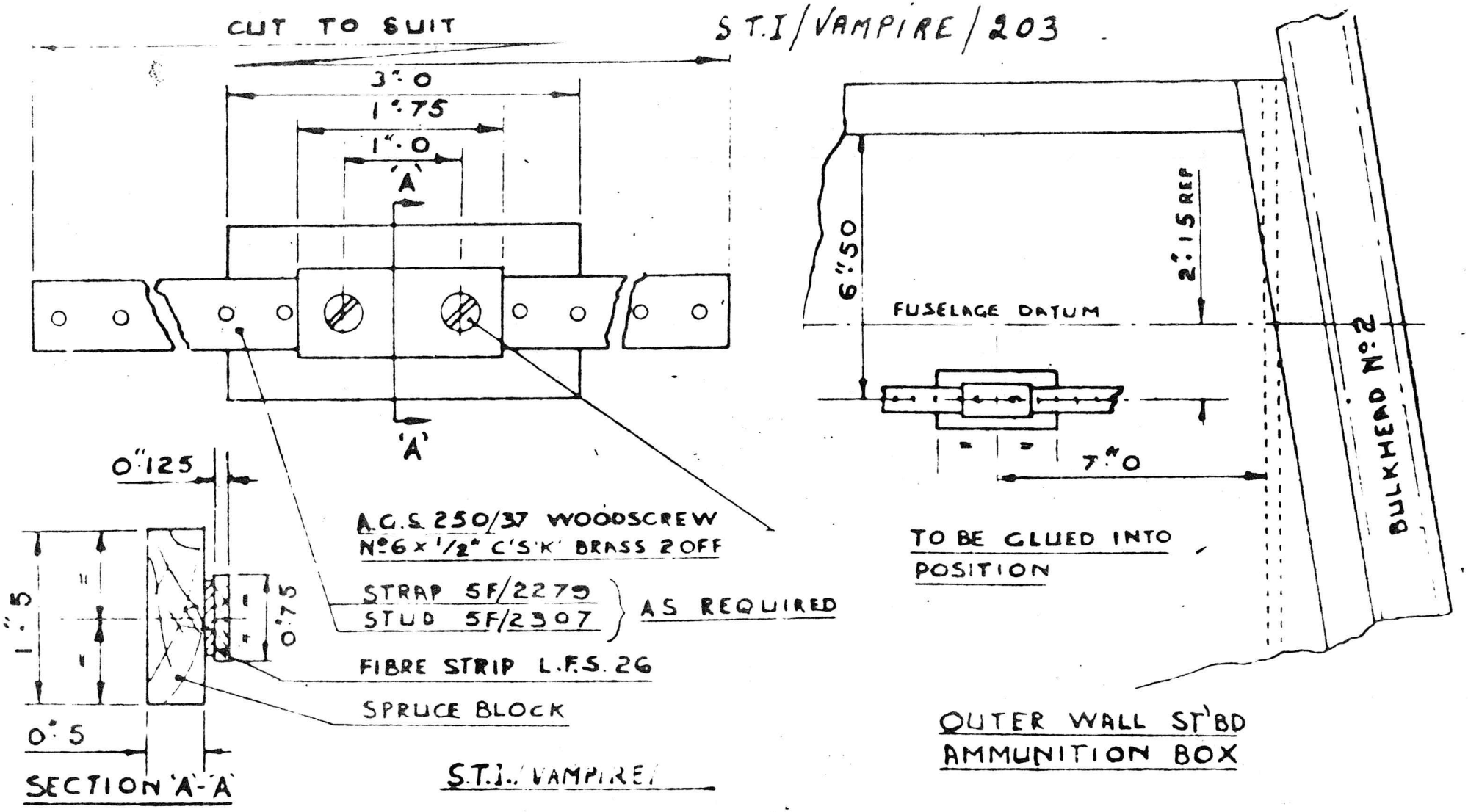

THE DE HAVILLAND AIRCRAFT CO. LTD. HATFIELD, HERTS.	VAMPIRE T.11 & T.22	CABLE STRAP ST'BD AMMUNITION BOX	H. HUNT 13.7.62	R.15N107

Technical Wing,
Royal Rhodesian Air Force,
New Sarum

R.R.A.F. Technical Staff Instruction
Vol.3. Sect.2. Sub-Sect.D.102. Issue 1

Date: 1st. May, 1962

This T.S.I. is issued in accordance with R.R.A.F. T.S.I., Vol.1, No.2, Issue 7.

(A) Special Technical Instruction/R.R.A.F./Vampire/21: Nose Undercarriage Hydraulic Flexible Lines: Chafing

(B) Vampire F.B.9 Aircraft.

(C) A case has occurred of the nose undercarriage "Down" pipe line bursting, owing to damage caused by chafing against the camera mounting tray fitted above the nose undercarriage wheel bay.

(D) This is a Class A instruction. Before next flight after receipt of materials, proceed as follows:-

(a) Inspect camera mounting tray, port side, for the fitment of a chafing strip.

(b) Where this chafing strip is not fitted, a six inch length of 5/16" channeling (Stores Ref. 32C/580) is to be fitted, using Rubber Resin cement (Stores Ref. 33M/72).

(c) Inspect flexible pipe lines 27M/7778 (Pt. No. AIR.31832) and, 27M/7781 (Pt. No. AIR.34490) for signs of chafing, renew as necessary.

(d) Renew protective tape covering of flexible pipe lines, using Tape, cambric, insulating (Stores Ref. 5F/9401212), as necessary.

Estimated Man-hours: 1 (plus rectification time):

(E) Record on appropriate forms.

(F) Nil

(G) Nil

(E.F. GERICKE)
Squadron Leader
Officer Commanding
Technical Wing
Royal Rhodesian Air Force
New Sarum

Source: RRAF/7501/4/1/ENG
Encl. 90A-B.

Technical Wing,
Royal Rhodesian Air Force,
New Sarum.

R.R.A.F. Technical Staff Instruction.
Vol.3. Sect.2. Sub.Sect.D.101 (Iss.1).

Date: 8th March, 1962

This T.S.I. is issued in accordance with R.R.A.F. T.S.I., Vol.1, No.2, Is[illegible]7

(A) Special Technical Instruction/Vampire/202
Elevator Mass Balance Weights : Corrosion

(B) 1. Vampire F.B.9, Mk. T.11. aircraft.

2. Elevator Mass Balance Weights, Ref. 26FC/6718 and 26FC/3953 held as spare or in Stores.

(C) Internal corrosion, which appears to be related to the Resin filler, may be present in the metal casing of the Mass Balance Weight.

(D) 1. This is a Class 'C' Instruction. Within 28 days of receipt of this Instruction proceed as follows:-

(a) Inspect the Elevator Mass Balance Weight, for signs of internal corrosion.

NOTE: Corrosion will be in the form of a crustation beneath the paint. This crustation will collapse when probed with a pointed instrument. The suspect area is that portion of the metal casing which contains the Resin filler, and break through of the internal corrosion may occur just below the welded joint where the arm meets the weight casing.

(b) Where corrosion is present the item is to be renewed.

Estimated Man-Hours: ½ (for inspection)

2. Items listed at Para (B) 2. held as spare or in Stores, are to be actioned in accordance with Para (D) 1. prior to Issue or Installation, as applicable.

(E) Record on the appropriate forms.

(F) Nil.

(G) Nil.

(E.F. GERICKE)
Squadron Leader,
Officer Commanding
Technical Wing
Royal Rhodesian Air Force
New Sarum

[illegible]: H.Q., R.R.A.F. 625/518/105.
A.M.A 287439/57.

Technical Wing
Royal Rhodesian Air Force
New Sarum

R.R.A.F. Technical Staff Instruction

Vol.3, Sect.2, Sub Sect. D.100 (Iss. 1)

Date: 8 December, 1961

This T.S.I. is issued in accordance with R.R.A.F. T.S.I. Vol.1, No.2 Issue 7.

(A) Special Technical Instruction/Vampire/200
Jamming of Throttle by Press to Talk and Gunsight Ranging Control Cables

(To be satisfied concurrent with Mod.3622, Vol.3, Sect.2, Sub Sect.B98)

(B) Vampire Mk.T.11 Aircraft, Post Mod. 3622.

(C) A case has been reported of jamming of the 2nd pilot's throttle lever by cables of the Press to Talk and Gunsight Ranging Control becoming caught up on the rear corner of the throttle seal, Pt. No.15CE.2119, introduced by Modification 3622.

(D) 1. This is a Class B Instruction. Within 7 days of the receipt of this Instruction proceed as follows:

(a) Move the throttle lever to the fully OPEN position.

(b) Slacken the 'P' clip on the outside of the 2nd Pilot's Control Box and, avoiding tension or sharp bends, adjust the length of the Press to Talk and Gunsight Ranging Control cables to the 'P' clip on the throttle lever to a minimum.

(c) Temporarily tighten the 'P' clip and check that the cables cannot be pulled through either clip. Renew clips as necessary.

(d) Move the throttle lever to the 'SHUT' position and check that the subject cable loop cannot be forced over the corner of the throttle seal, Pt. No. 15CE.2119. Adjust as necessary and tighten 'P' clips.

(e) Move the throttle over its full range several times and check that the cable run is free from tension or sharp bends.

Estimated Man-Hours: ½

(E) Record on the Aircraft Form 700 and F.4801.

(F) Nil

(G) Nil

(J.F. BERICKE)
Squadron Leader,
Officer Commanding
Technical Wing
Royal Rhodesian Air Force
New Sarum

Masters: A.M. S.T.I.

Technical Wing,
Royal Rhodesian Air Force,
New Sarum.

R.R.A.F. Technical Staff Instruction

Vol.3.Sect.2.Sub.Sect.D.99.(Iss 1).

Date:- 27th. November, 1961

This T.S.I. is issued in accordance with R.R.A.F. T.S.I. Vol.1.No.2.Issue 7.

(A) Special Technical Instruction/Vampire/201.
Wing Tip Diaphragm to Rib 14. Sealing.

(B) Vampire T.11. Aircraft, and F.B.9. aircraft.

(C) Cases have been reported of inadequate sealing between the end of the Port or Starboard Rib 14 and the Wing Tip diaphragm. This constitutes a loose articles hazard.

(D) This is a Class "C" Instruction. Within 28 days of receipt of this instruction proceed as follows:-

(a) Check the port and starboard wings for sealing between the Rib 14 and the wing tip just forward of the modification plate.

(b) Where an Alcled angle is fitted no further action other than recording is necessary.

(c) Where no angle is fitted, the gap is to be sealed by a Fibrite patch covering the gap and the two rivet holes in the end of the rib.

Estimated Man-hours: 1 (Check Negligible)
Rectification ½ hour).

(E) Record in F.700 and A.501.

(F) Nil.

(G) Nil.

(R.F. GERICKE)
Squadron Leader
Officer Commanding
Technical Wing
R.R.A.F. New Sarum

SOURCE: A.M. S.T.I.

Technical Headquarters,
No. 1. Group,
Royal Rhodesian Air Force.

No. 1. Group Technical Staff Instruction.
Vol.3. Sect.2. Sub.Sect. D.98. (Issue 1).
Vol.7. Sect.2. Sub.Sect. D.43. (Issue 1).

24th July, 1961.

(A) Special Technical Instruction/R.R.A.F./Vampire/20.
Rear Cone Flame Switch Cable: Overheating and Damage.

(B) Vampire Mk.T.11. aircraft.

(C) Cases have been reported of overheating and damage to the fire circuit uniprenmet cables and the synthetic rubber tubing covering them, due to the resting of these cables on the fire guard. These cables interconnect the port and starboard rear engine flame switches to the rear engine cone flame switches. This is due to insufficient cleating.

(D) This is a Class A Instruction. Before the next flight proceed as follows :

(a) Locate the cables uniprenmet Ref. No. 5E/3090 enclosed in tubing flexible synthetic rubber Ref. No. 5F/2258.

(b) Where these cables are secured by ONE clip only Terry Type 80 Ref. No. 28E/9131184 examine for overheating and damage. Replace if necessary, and fit an extra clip in such a position as to ensure that cables cannot come into contact with the fire guard.

(E) Record on the Form 700.

(F) Nil.

(G) Nil.

(H.J. PRINGLE)
Wing Commander
S.T.S.O.

SOURCE: Tech. H.Q. No. 1. Group. Ref: 1.Gp/750/4/2/ENG.

DISTRIBUTION :

In accordance with Vol.1.No.2. (Issue 6) Para 6 (As amended).

Technical Headquarters,
No. 1. Group,
Royal Rhodesian Air Force.

No. 1. Group Technical Staff Instruction.
Vol.3. Sect.2. Sub.Sect.D.97.(Issue 1).

22nd June, 1961.

(A) STI/RRAF/V/19: VAMP.F.B.9 AIRCRAFT - INCORRECT INSTALLATION OF CANOPY RESULTING IN LOSS DURING FLIGHT

(B) A case has occurred in the R.R.A.F. of a Vampire FB.9. aircraft jettisoning its canopy on take-off. On investigation it was discovered that this was due to the canopy having been jettisoned on the ground, after the previous flight, and the canopy being reinstalled without the jettison mechanism being reset.

(D) This is a Class A Instruction. Before the next flight proceed as follows :-

(a) Ensure that the canopy jettison mechanism is in the correct locked position, by checking that the eight latch pegs (4 on port and 4 on starboard side of cockpit), are at the forward end of their respective slots, (refer A.P.4099 E & G Vol.4. Part 2, Section 2, Chapter 1, Item 10 (i)).

(b) Using DTD 772A, cellulose black, high gloss lacquer, paint the head of each latch peg and a black arrow below the peg and slot to indicate lined up locked position, (see diagram). Repeat for all latch pegs (8 off).

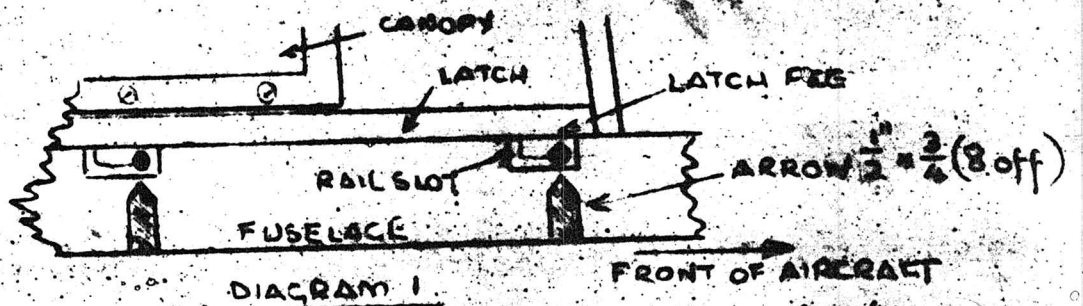

DIAGRAM 1

VAMPIRE F.B.9. STD. SIDE COCKPIT EXTERNAL VIEW

Estimated man hours - 30 minutes.

(E) Record compliance in F.700 and F.4801.

(F) Nil.

(G) Nil.

(D.B. MILES)
Flying Officer
ENG I.

SOURCE: 1.Gp/C.1401/222/P1.
1.Gp/750/1/1/Eng.

DISTRIBUTION :-

In accordance with Vol.1.No.2. (Issue 6) Para 5 (as amended).

Technical Headquarters,
No. 1. Group,
Royal Rhodesian Air Force.

No. 1. Group Technical Staff Instruction
Vol.3. Sect.2. Sub.Sect.D95. (Issue 1).

12th October, 1960.

(A) Special Technical Instruction/Vampire/199.
Canopy Hatch Hinge Pins - Fatigue.

(B) Vampire T.11. Aircraft which have achieved 400 flying hours or more.

(C) Cases have been reported of failure of the canopy hatch hinge bolts due to fatigue.

(D) This is a Class "C" Instruction. As soon as possible, and within 28 days of receipt of this instruction, proceed as follows :-

(a) Remove and destroy the canopy hinge bolts Part No. 15FC.2005, Ref. 26FC/8854.

(b) Fit new bolts Ref. 26FC/8854, using existing slotted nuts and washers. Drill split pin holes accordingly.

NOTE: The bolts are secured to the rear hinge cover plate by countersunk rivets Stores Ref. 28C/17248, which are lightly peened. Replacement rivets are to be demanded together with new bolts.

Estimated Man Hours: 1.

(E) Record on the appropriate forms.

(F) Nil.

(G) Nil.

Arrangements are in hand to "life" the canopy hatch hinge bolts at 400 hours.

(H.J. PRINGLE)
Wing Commander
S.T.S.O.

SOURCE: A.M.Memo. C119181/59.

DISTRIBUTION :-

In accordance with Vol.1. No.2. (Issue 6) Para 6 (As amended).

Technical Headquarters,
No. 1. Group,
Royal Rhodesian Air Force.

R.R.A.F. Technical Order.
Vol.3.Sect.2.Sub.Sect.D93. (Issue 1).

15th March, 1960.

(A) SPECIAL TECHNICAL INSTRUCTION/VAMPIRE/196
MAIN FUEL PIPE AND HYDRUALIC N.R.V.: CHAFING.

(B) Vampire Mk. T.11 Aircraft.

(C) Cases have been reported of chafing between the main fuel pipe, from the port No. 1 fuel tank, and the body of the hydraulic inboard ground test connection, non-return valve (26FC/2629) which is situated on the rear face of bulkhead No. 4. In some instances, damage has occurred which necessitated the renewal of either the fuel pipe or the non-return valve.

(D) This is a Class C Instruction. Within 28 days of receipt of this Instruction, proceed as follows :-

PART 1

(a) Locate the non-return valve (26FC/2629) on the rear face of bulkhead No. 4.

(b) Examine the main fuel pipe from the port No. 1 fuel tank, and the non-return valve for signs of chafing.

(c) Where no chafing exists, no other action is necessary other than recording.

(d) Where chafing does exist, reports are to be rendered to this H.Q. to enable provisioning action to be taken.
NOTE: Nil returns are required.

PART 2

(a) Carry out inspection as at sub paras. (a) & (b) of Part 1.

(b) Where chafing exists and spares are available, the affected components are to be renewed.

NOTE: 4 off only of Non-Return Valve (26FC/2629) are available from C.E.D. at present.

(c) Care is to be taken on refitting either component to ensure that a clearance exists between the fuel pipe and the non-return valve.

(d) Clearance may be obtained by slackening off the fuel pipe connections, and adjusting the position of the fuel pipe relative to the non-return valve.

(e) Retighten the fuel pipe connections after adjustments.

Estimated Man-Hours : 1½.

(E) (1) Record on the appropriate Forms.

(2) Part 1 and Part 2 of Para D are to be recorded separately as and when they are satisfied.

(F) Nil.

(G) Nil.

H. J. Pringle
(H.J. PRINGLE)
Wing Commander
S.T.S.O.

SOURCE: A296120/58/Air.Eng.12a.

DISTRIBUTION:- One copy to essential recipients plus the following :-
W.O. i/c No. 1. Squdn. (1) File 1.Gp/7504/1/eng.

Technical Headquarters,
No. 1. Group,
Royal Rhodesian Air Force.

R.R.A.F. Technical Order.
Vol.3. Sect.2. Sub.Sect.D91 (Issue 1).

26th January, 1960.

(A) Special Technical Instruction/Vampire/193
Brake Differential Unit : Cable Adaptor Loose.

(B) 1. Vampire Mk.T.11 Aircraft.

2. Items Pt. No. 15S.19 Ref: 26FC/6049 held as spare or in Store.

(C) A case has been reported where the cable adaptor, Part No. 15S.19, Ref. 26FC/6049, pulled out of the cable block in the differential unit, rendering the brakes inoperative, due to lack of thread engagement.

(D) 1. This is a Class "C" instruction. Within 28 Flying Days of receipt of this Instruction proceed as follows :-

(a) Jack the aircraft so that the wheels are clear of the ground.

(b) Disconnect the cable interlinkage by removing the SP.4/D.7 pin.

(c) From the centre of the face of the valve, remove the blanking plug and slacken the grub screw which lies beneath it.

(d) Unscrew the cable adaptor, Part No.: 15S.19, Ref. 26FC/6049, and remove it from the unit.

(e) In the same plane as the $\frac{1}{4}$ inch hole, file a flat the full length of the threads to the depth of the thread core. Identify its position with white paint on the eye end of the cable adaptor.

(f) Re-assemble and adjust the cable adaptor by screwing it fully home then screw out one turn plus that required to bring the flat on the threads directly into contact with the grub screw.

NOTE: The distance between the top of the unit and the end face of the cable adaptor must be within the limits of 2.1/16 inches and 2.5/32 inches.

(g) Screw the grub screw tight home and replace the blanking plug.

(h) Reconnect the cable interlinkage. Check and adjust the brakes as necessary.

Estimated Man-hours : 4

2. Items held as spare or in Store are to be rectified in accordance with para. (D)1. (e) prior to Installation or Issue, as applicable.

(E) Record on the appropriate Form.

(F) Nil.

(G) Nil.

(H.J. PRINGLE)
Wing Commander
S.T.S.O.

SOURCE: A.296119/58/Air.Mag.12a.

DISTRIBUTION :-
One copy to essential recipients
plus the following :-
W.O. i/c No. 1. Sqdn. (2)

Headquarters,
No. 1. Group.
Royal Rhodesian Air Force.

19th January, 1960.

R.R.A.F. Technical Order.
Vol.3. Sect.2. Sub.Sect.D90. (Issue 1).
Vol.6. Sect.3. Sub.Sect. D11 (Issue 1).

(A) Special Technical Instruction/Vampire/192
Pitot and Static Pipelines: Bending and Kinking of Pipelines Forming Moisture Traps

(B) Vampire Mk. 9, & T.11. aircraft.

(C) Cases have occurred, in pitot and static systems, where the pitot and static pipelines Pt. Nos. Q.001014 and Q.001016 have been found kinked or raised in the vicinity of the two pipe connections in the rearmost compartment of the port boom. These bends and kinks can form moisture traps and thus provide an icing hazard.

(D) 1. This is a Class B instruction. Within 7 days of the receipt of this Instruction proceed as follows :-

(a) Remove the rearmost outboard inspection panel from the port boom and inspect for the defect as stated.

(b) Where the defect is found to exist the pipes, where possible, are to be carefully bent to correct the defect.

(c) Pipes found badly bent or kinked are to be reported to Technical Headquarters, No. 1. Group.

(d) Carry out leak test.

(e) Carry out hot air drying of pipelines in cases where the defect is considered to have existed.

ESTIMATED MAN-HOURS: Inspection: 1
: Rectification: 3-4.

(E) Record on the appropriate forms.

(F) Nil.

(G) Nil.

(H.J. PRINGLE)
Wing Commander
S.T.S.O.

SOURCE: A.243631/56/Air.Eng.4.

DISTRIBUTION :

One copy to essential recipients plus the following :-

W.O. i/c Instrument Section (2)
W.O. i/c No. 1. Sqdn. (2)

Headquarters,
No. 1. Group.

R.R.A.F. Technical Order.
Vol.3. Sect.2. Sub.Sect.D89 (Issue 1).

14th December, 1959.

(A) Special Technical Instruction/Vampire/191
Access Door, Engine Inspection Door and Cowling Toggle Fasteners:
Incorrect Dzus Fasteners.

(B) 1. Vampire Mk. 9 and T.11 aircraft.

2. Items held as spare or in Stores:-

Part No. L00.116A	Ref. 26FC/3434
Part No. L00.4013A	Ref. 26FC/12544

Assemblies:

Part No. 15.EC.151	Ref. 26FC/2625
Part No. 15.EC.253	Ref. 26FC/12545
Part No. L00.50A	Ref. 26FC/1031
Part No. L00.51A	Ref. 26FC/6814
Part No. L00.57A	Ref. 26FC/1035
Part No. L00.58A/1	Ref. 26FC/6760
Part No. L00.4061	Ref. 26FC/13065

(C) Cases have been reported where incorrect Dzus fasteners, Part No. 40/PARK 2/DS, have been fitted to the Access Doors, Part No. L00116A, Ref. 26FC/3434 and Part No. L004013A, Ref. 26FC/12544 which cover the Toggle fasteners of the engine inspection doors and cowlings. This allows the ends of the slots to align with the locked position marks when the fastener is in the unlocked condition.

(D) 1. This is a Class "B" Instruction. As soon as possible and not later than 7 Flying Days of receipt of this Instruction proceed as follows :-

(a) Assemble and lock the Toggle fastener doors, Part No. L00.116A, Ref. 26FC/3434, or Part No. L00-4013A, Ref. 26FC/12544, in their respective positions on the engine inspect on doors and cowlings.

(b) With the Dzus fastener in the locked position, check the attitude of the screw driver slot. Should it be vertical reports are to be rendered in accordance with para (F)

Estimated Man-hours : 10 Mins (plus rectification time).

2. Items and Assemblies listed at Para (B) (2), held as spare or in Store, are to have the subject Dzus fasteners checked for type prior Installation or Issue, as applicable. Should the type number be suffixed by the symbol "Mk.2" (—/2), the screw driver slot is positioned at 90° to the normal and is, therefore, unsuitable. All such fasteners must be reported in accordance with Para (F).

(E) Record on the appropriate Form.

(F) Any incorrect type of Dzus fastener found fitted is to be reported to Technical Headquarters No. 1. Group, R.R.A.F., immediately.

2/.....

Headquarters,
No. 1. Group.

R.R.A.F. Technical Order.
Vol.3. Sect.2. Sub.Sect. D88 (Issue 1).

14th December, 1959.

(A) Special Technical Instruction/Vampire/190
Nose Undercarriage - Incorrect Washers

(B) Vampire Mk. 9 and T.11 aircraft.

(C) A case has been reported where an incorrect washer S.P.13/J was fitted under the $\frac{3}{8}$ inch B.S.F. nut on the nose undercarriage shock absorber lower attachment bolt, Part No: 12.20UN.53, Ref: 26FZ/6708. This washer being only 0.7 inch o.d. would allow the bolt to be withdrawn when nutted and locked.

(D) 1. Class "C" - As soon as possible and within 28 Flying Days of the receipt of this Instruction proceed as follows :-

(a) Check the outside diameter of the washer fitted under the $\frac{3}{8}$ inch B.S.F. nut on the nose undercarriage shock absorber lower attachment bolt.

(b) If the o.d. of the washer is 0.9 inch, no further action other than recording is necessary.

(c) Where the washer is less than 0.9 inch o.d. reporting action in accordance with Para. (F) is to be taken.

Estimated Man Hours: 1

(E) Record on the appropriate Form.

(F) Any defective washers found fitted as at Para (D) 1, Sub-para (c) are to be reported immediately to Technical Headquarters, No. 1. Group, R.R.A.F.

(G) Nil.

The appropriate Schedules of Spare Parts will be amended in due course.

(H.J. PRINGLE)
Wing Commander
S.T.S.O.

Source : A.290791/58/Air.Eng.12a.

Distribution :-

One copy to essential recipients
plus the following :-

W.O. i/c No. 1. Sqdn. (2)

Headquarters, No. 1 Group,
ROYAL RHODESIAN AIR FORCE.

R.R.A.F. Technical Order.
Vol.3,Sect.2,Sub.Sect.D.87,(Issue 1)

13th October, 1959.

(A) Special Technical Instruction/Vampire/189
Control Column : Restriction of Moment

(B) Vampire Mk. T.11 aircraft.

(C) Cases have been reported where the Clips, Part No. 12.N.563, securing the main firing switch cables to the control columns have been incorrectly assembled. This can result in a foul with the wheel brake Bowden cables, causing partial restriction on the movement of the aileron and elevator controls.

(D)1. Class "B". Within 7 Flying days of the receipt of this Instruction proceed as follows:-

(a) Locate the cable clips, Part No.15.N.563, which secure the main firing switch cables to the port and starboard control columns.

(b) Check that in each case the clip securing screw is facing inboard from its respective control column, as illustrated on the attached drawing R.15.N.106.
Rectify where necessary.

Estimated Man-Hours: (plus rectification time as required.)

(E) Record on the appropriate form.

(F) Nil.

(G) Nil.

(R.J. PRINGLE)
Wing Commander,
S.T.S.O.

SOURCE:- A287439/57/AIR ENG.12a.

DISTRIBUTION:-

One copy to all essential recipients plus the following:-

W.O. i/c No. 1 Squadron 2.
W.O. i/c No. 2, Squadron 2.

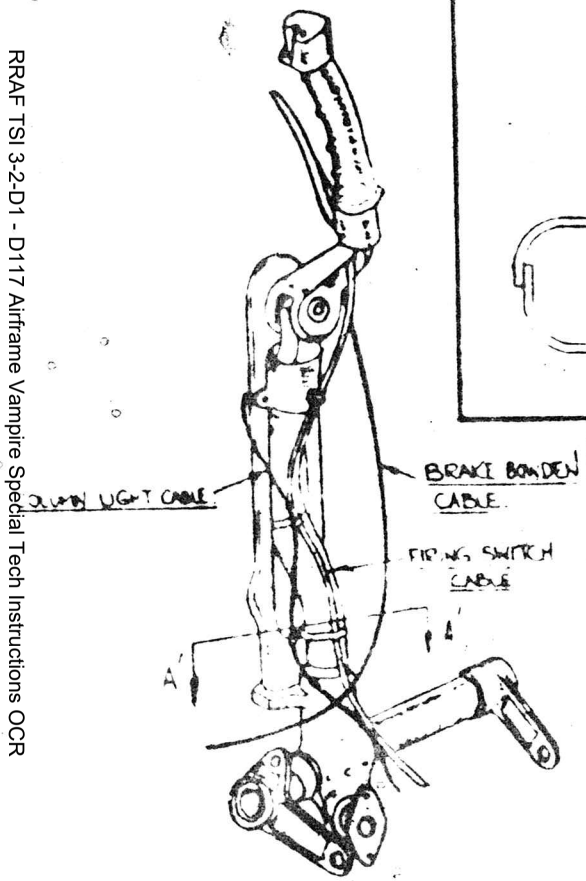

SKETCH VIEW OF STARBOARD CONTROL COLUMN.

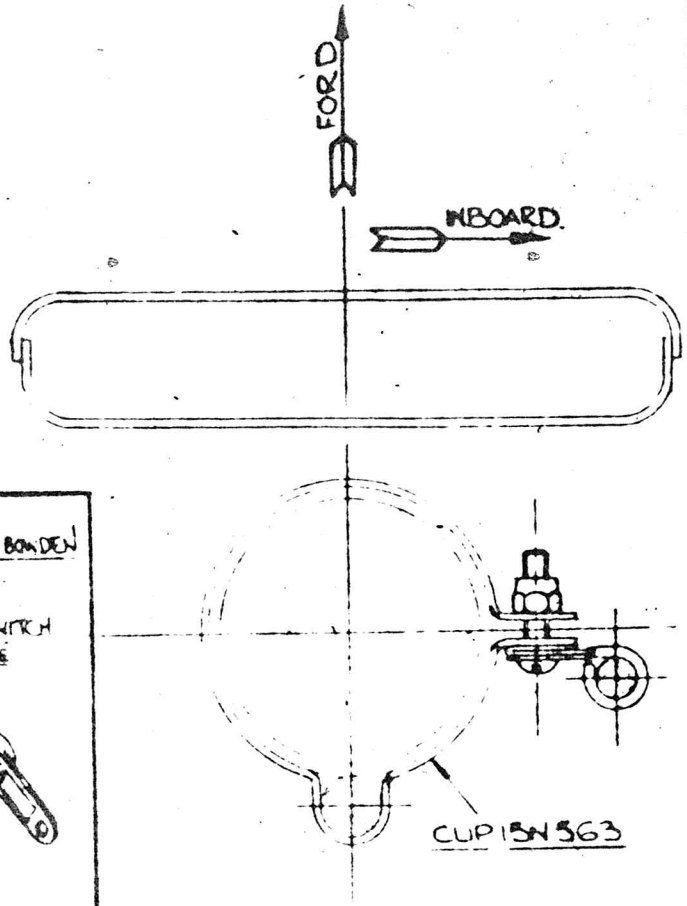

SECTION 'A'-'A'
THRO' PORT CONTROL COLUMN.

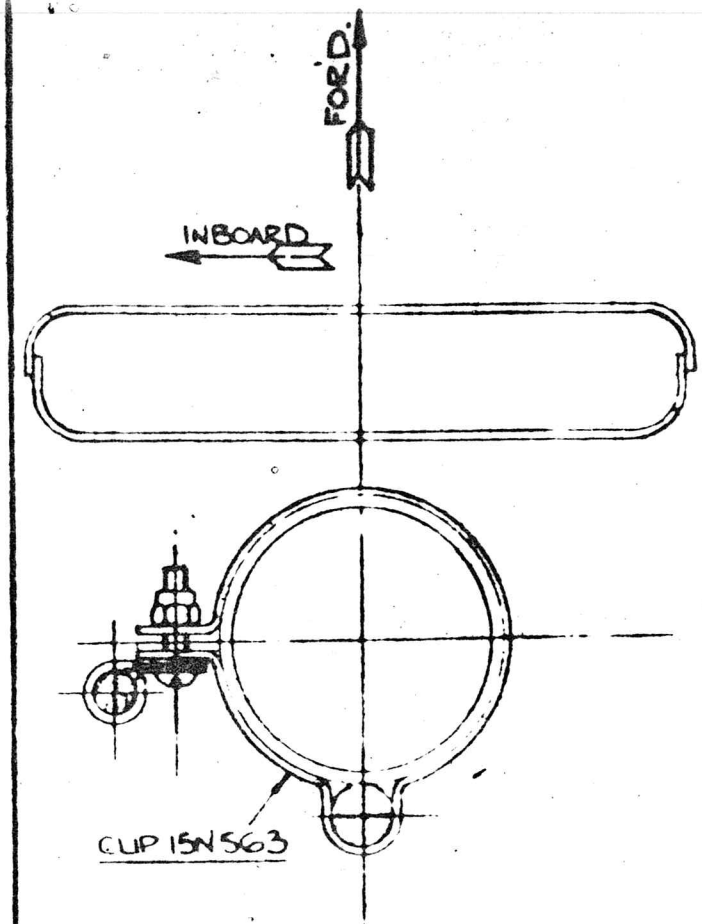

SECTION 'A'-'A'
THRO' STARBD CONTROL COLUMN

BOLT LUGS ON CLIPS MUST FACE INBOARD AS SHOWN.

STI
Vampire
189

THE DE HAVILLAND AIRCRAFT CO LTD. CHRISTCHURCH, NAM.	VAMPIRE T 11 SEA VA 281	~~REPAIR TO~~ CORRECT METHOD OF FITTING CLIPS 5N563 TO CONTROL CC	5-8-59	5-7-59	RJ5N106 1

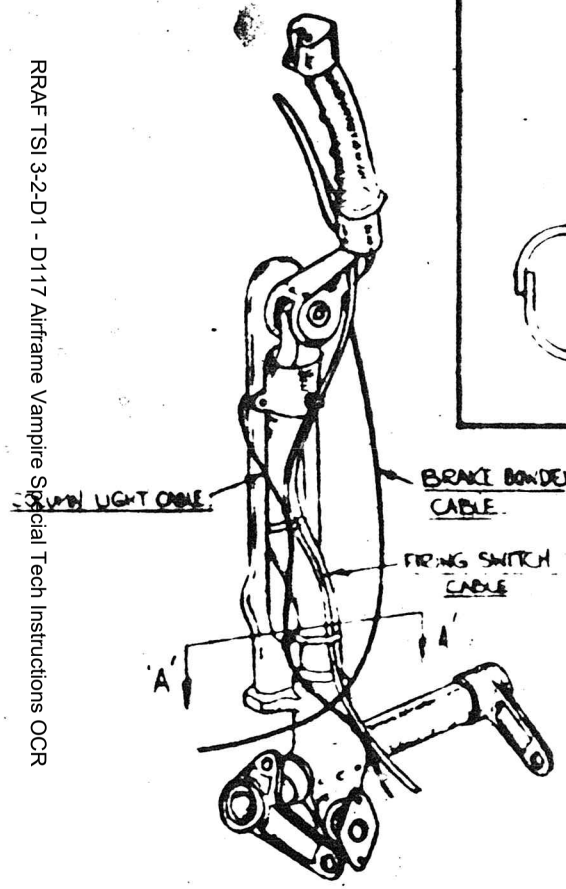

SKETCH VIEW OF STARBOARD CONTROL COLUMN.

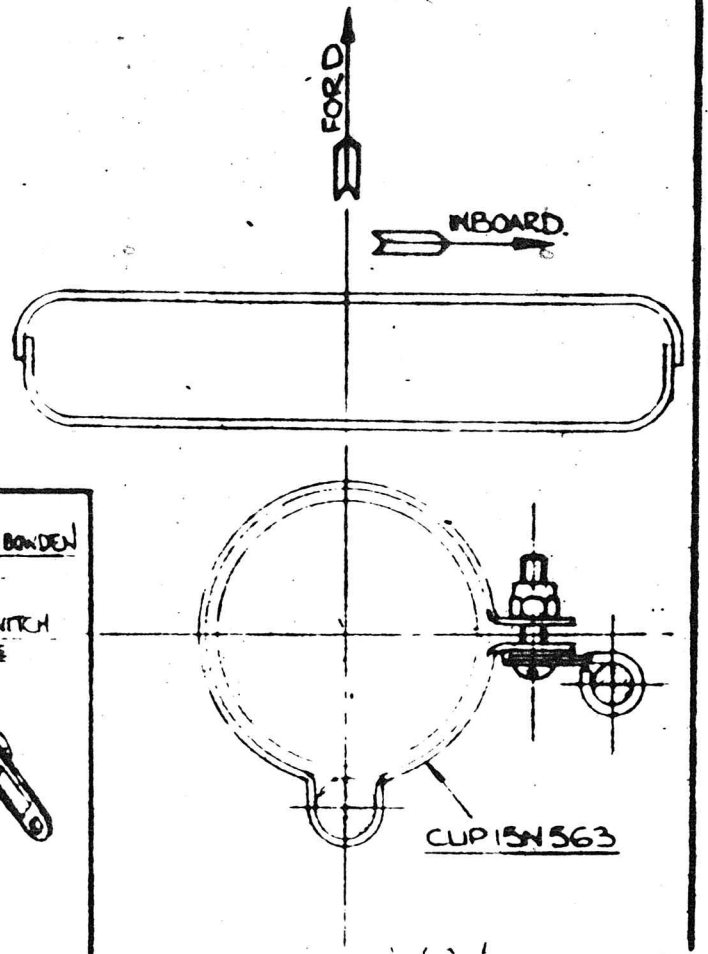

SECTION 'A'-'A'
THRO' PORT CONTROL COLUMN.

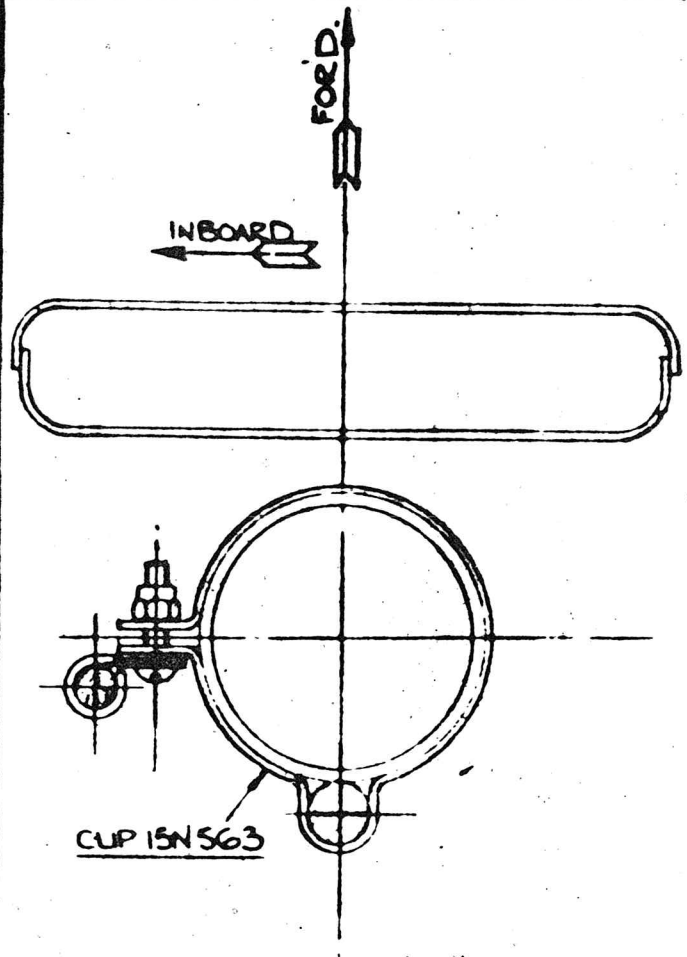

SECTION 'A'-'A'
THRO' STARBD. CONTROL COLUMN

BOLT LUGS ON CLIPS MUST FACE INBOARD AS SHOWN.

571
Vampire
189

THE DE HAVILLAND AIRCRAFT CO. LTD. CHRISTCHURCH, HANTS.	VAMPIRE 11 SEA VAMPIRE 28		CORRECT METHOD OF FITTING CLIPS 63 CONTROL CG	5.8.59	5.7.59	RJ5N106

Air Headquarters,
Royal Rhodesian Air Force.

R.R.A.F. Technical Order.
Vol. 3. Sect. 2. Sub.Sect. D86(Issue 1).

22nd September, 1959.

(A) Special Technical Instruction/Vampire/188
Flying Control Levers in Tail Booms - Incorrect Assembly

(B) Vampire Mark 9, and T.11 aircraft.

(C) Cases have been reported of a flying control lever at the rear end of the tail boom being found incorrectly assembled. Under these conditions the retention of the lever in position relies entirely on the caulking of the bearing. This may be aggravated by the bearing becoming loose in its housing. The levers affected situated in the port and starboard booms are as follows :-

Lever Rudder Control	K00.469A	Ref.	26FC/3262
" " "	K00.470A	"	26FC/3263
Lever Elevator "	K00.471A	"	26FC/3264
" " "	K00.472A	"	26FC/3265
Lever Rudder "	13.TB.27A	"	26FC/5608

(D) 1. This is a CLASS D Instruction. Within 3 months of receipt, proceed as follows :-

(a) Refer to the attached Drawing R.OOK.13, and check the levers indicated for correct assembly, i.e., the caulked side of the lever should be next to the retaining nut.

(b) Where levers are correctly assembled and show no sign of wear of the bearing housing no further action, other than recording is necessary.

(c) Where levers are incorrectly assembled and show no sign of wear of the bearing housing, fit Special Nut 26FC/13198 Part No. ROOK.14.N.D., in lieu of the existing retaining slotted nut, A27/ES. Special Nut Part No. ROOK.14.N.D. is becoming available and demands should be placed for exact requirements only. (See para (F) below.)

NOTE: The existing split pin hole in the lever shaft must be used when locking the special nut.

(d) Levers which show signs of wear are to be renewed.

Estimated Man-Hours: ½

(E) Record on the appropriate Form.

(F) Reference is made to Para (D)1 sub-para (c). Special Nuts 26FC/13198 are not available in the R.R.A.F. at present. Units are therefore to submit quantity of Special Nuts required to Tech. Stats. A.H.Q. when all aircraft have been inspected, so that provisioning action may be taken.

(G) Nil.

(H.J. PRINGLE)
Squadron Leader
S.T.S.O.
A.H.Q. R.R.A.F.

SOURCE : A.287439/57/Air.Eng.12a.

DISTRIBUTION :-

One copy to essential recipients
plus the following :-

W.O. i/c No. 1. Sqdn. (2)
W.O. i/c No. 2. " (2)
W.O. i/c A.R.S. " (2)

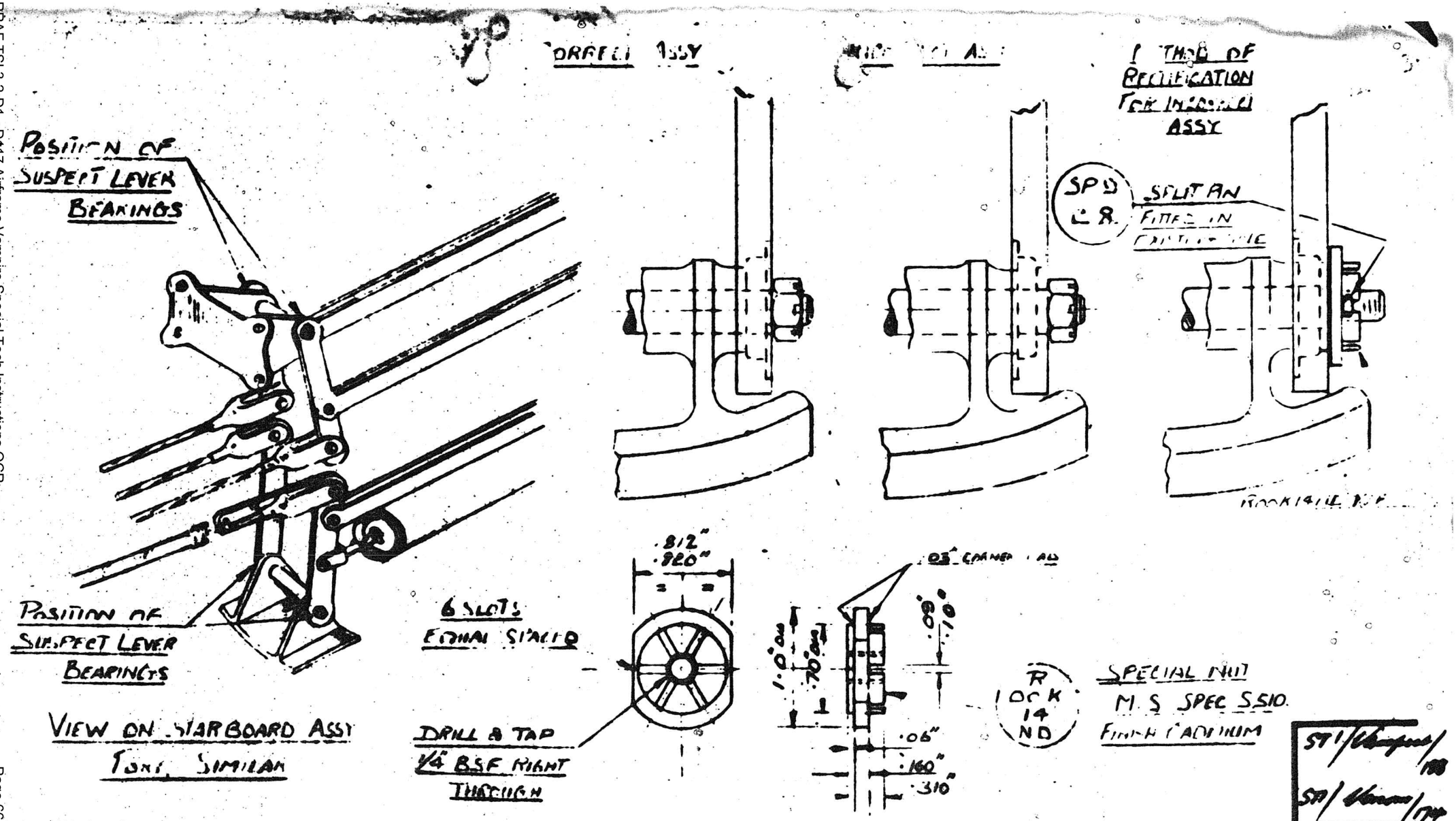

THE DE HAVILLAND AIRCRAFT CO., LTD.
CHRISTCHURCH, HANTS.
19207.

M/c TYPE	M/c REGn. No.	REPAIR TO:- RECTIFICATION OF INCORRECT ELEVATOR & RUDDER LEVER ASSY	DR. BY	APP. BY	R.OOK.13
[illegible]			R G W[illegible]		
			20.3.[illegible]		ISSUE:- 1

Technical Headquarters,
No. 1. Group,
Royal Rhodesian Air Force.

29th September, 1960.

No. 1. Group Technical Staff Instruction.

Vol. 16. Amendments.
Amendment No. 475.
Amending Vol.3. Sect.2. Sub.Sect.B86.(Iss1).

Mod. R.R.A.F. Vampire 9.

1. Information has been received to the effect that the Part No. of the Silicone Rubber Hoses, introduced by the above Modification has been incorrectly quoted, and in addition, the quantity required to effect embodiment has been found to be insufficient.

2. All recipients of the above No. 1. Group Technical Staff Instruction, are advised that the following handwritten amendment is to be made to their copy/copies of this Modification.

Para 5 : PARTS AND SPECIAL TOOLS REQUIRED

Amend DAS/393/20/2.5 Dunlop Silicone glass fabric coupling hose Quantity 4. to read DAS/393/24/2.5 - Quantity 5.

3. It is further advised that due to the non-availability of the hoses introduced by Para 2. above, that a concession is granted in respect of the requirements of Para 2 a Vol.3. Sect.2. Sub.Sect.B86. (Issue 1) regarding the fitment of these particular items. Concession withdrawal will be promulgated in T.S.I's and will be dependant upon receipt of "Dues In" Notice.

(C.G. BARTON)
W.O. i/c Tech. H.Q.
No. 1. Group. R.R.A.F.

SOURCE: No. 1. Group Signal T.275 dated 23rd September 1960, and 1.Gp/7501/4/3/Eng. Enclosure 8.

DISTRIBUTION :

In accordance with Vol.1. No.2. Issue 6 Para 6. (As amended).

FROM : Headquarters, No. 1, Group, Royal Rhodesian Air Force

TO : O.C. Royal Rhodesian Air Force, New Sarum
O.C. Royal Rhodesian Air Force, Thornhill
O.C. Central Technical Depot.

DATE : 29th January, 1960

REF : 1.Gp/7504/1/ENG. Vol.4.

RUDDER STATIC BALANCE ARM, END FLOAT :
S.T.I./VAMP/181A & SI/VAMP/37

1. Your letter MS/0593/ENG dated 25th November, 1959, and our letter 1. Gp/7504/1/ENG. Vol.4, dated 7th December, 1959, refer.

2. Some doubt having arisen regarding the correct rudder balance arm end float (.006 in respect of STI/VAMP/181A, .015 for SI/RRAF/VAMP/13A, and .030 for SI/VAMP/37). Group Headquarters decided that, pending clarification on this subject by Messrs. de Havillands Ltd., the overiding authority would be STI/VAMP/181A, and the maximum permissible end float would be .006".

3. De Havilland's have advised that STI/VAMP/181A is in no way connected with SI/VAMP/37, and that the two figures regarding the balance arm end float .006" and .030" respectively, still apply. You are therefore advised that SI/RRAF/VAMP/13A has been cancelled by AL.341 as it is no longer applicable. SI/VAMP/37 was erroneously cancelled and superseded by SI/RRAF/VAMP/13A, and this order is in the process of being re-issued.

4. To clarify the position in respect of STI/VAMP/181A and SI/VAMP/37, the dimensions quoted, viz. .006 and .030 are calculated as follows :

a) STI/VAMP/181A : .006" is the maximum permissible difference between the sum of the combined heights of the two ball race inner tracks plus the height of the internal distance piece as compared to the distance between the shoulder of the casting.

b) SI/VAMP/37 : the .030" end float of the balance arm refers to the clearance in the bearings, which permits the balance arm (and bearing outer tracks) to move up and down (axially) on the inner track assemblies. It should be noticed that this figure of .030" is above average, as the races in the balance arm are of self aligning type, which normally, even when new, feature a clearance in excess of .020".

(H.J. PEINGLE)
Wing Commander
S.T.S.O.
No.1.Group,
ROYAL RHODESIAN AIR FORCE

Air Headquarters,
Royal Rhodesian Air Force.

R.R.A.F. Technical Order.
Vol. 3. Sect. 2. Sub.Sect. D85 (Issue 1).

22nd September, 1959.

(A) SPECIAL TECHNICAL INSTRUCTION/VAMPIRE/181A
RUDDER CONTROL IN TAIL BOOM: STATIC BALANCE
ARM PIVOT BOLT : FRACTURED.

(B) Vampire Mk 9 and T.11 aircraft.

(C) Cases have occurred of the Pivot Bolt, Part No. KOO. 363, Stores Ref. 26FC/3234, of the Rudder Static Balance Arm in the Tail Boom, breaking at the first thread past the plain shank of the bolt.

(D) 1. This is a Class D Instruction. Within 6 months of receipt of this Instruction, proceed as follows on both Port and Starboard Booms :-

(a) Remove and dispose of the existing Rudder Static Balance Arm Pivot Bolt, Part No. KOO.363, Stores Ref. 26FC/3234.

(b) Mks. T.11 Aircraft only. Check that the Static Balance Arm is Part No. 12. CF/503A (26DV/3532). NOTE MOD 3344 introduced this steel lever in lieu of Light Alloy lever KOO.339A. (26FC/3259.)

N.B. All R.R.A.F. T.11 aircraft have Mod. 3344 embodied.

(c) Check the bearing of the static balance arm for serviceability. There should be no movement between the bearings in way of the subject pivot bolt and their respective housings.

(d) Employing a new Bolt, Part No. KOO.363, Stores Ref. 26.FC/3234, reassemble the arm in accordance with the Drawing R.15.CF.103 attached.

(e) Restore aircraft to normal.

Estimated Man Hours : 15 per aircraft.

(E) Record in the Forms 700 and 4801.

(F) Nil.

(G) Nil.

Servicing Schedules are being amended to apply the above at each Major Servicing.

(H.J. PRINGLE)
Squadron Leader
S.T.S.O.
A.H.Q. R.R.A.F.

SOURCE : A.287439/57/Air.Eng.1b dated 22nd December, 1958.

DISTRIBUTION :-

One copy to essential recipients plus the following :-

W.O. No. 1. Sqdn. (2)
W.O. No. 2. " (2)
W.O. A.R.S., C.T.D. (2)

VOL 3 - 2 - D85 (ISSUE 1)

PIVOT BOLT KOO 342
WASHER SP 13 E
NUT A27 E3
SPLIT PIN SP9C8

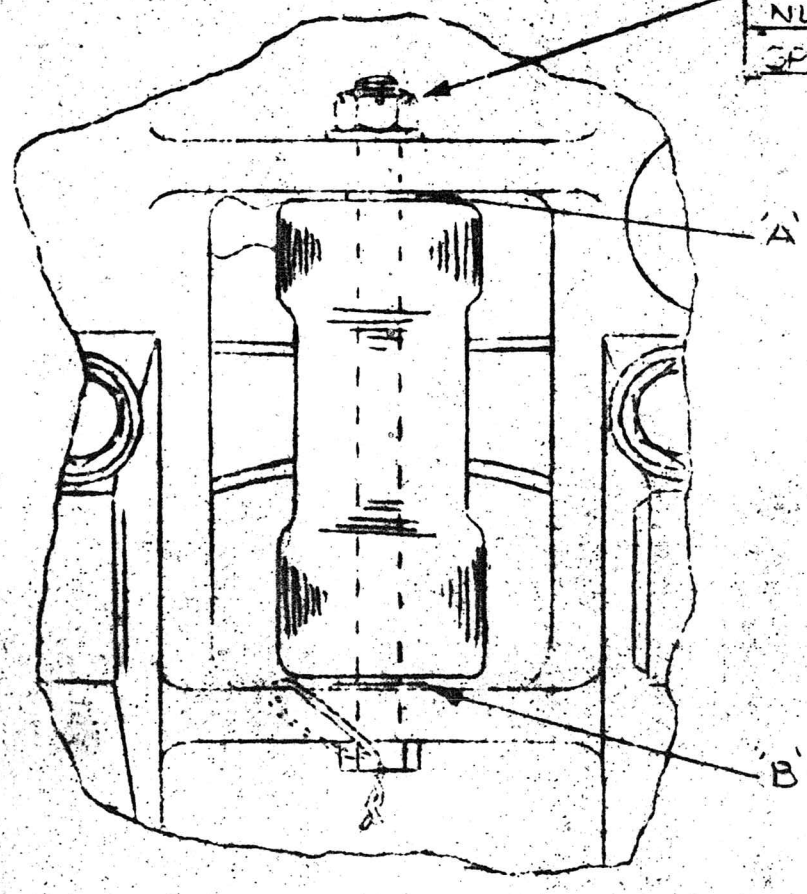

VIEW LOOKING AFT

CONTROL LEVERS NOT SHOWN

(1) PERMISSIBLE CLEARANCE BETWEEN RUDDER BALANCE ARM & LUGS IS $^{-0.000''}_{+0.006''}$ WHERE CLEARANCE EXCEEDS 0.006" A STEEL SHIM OR WASHER IS TO BE INSERTED AT POINT 'A' OR 'B' TO SUIT INDIVIDUAL ASSEMBLY TO OBTAIN THESE LIMITS.

(2) UNDER NO CIRCUMSTANCES SHOULD PIVOT BOLT BE OVERTIGHTENED.

(3) DRILL No 58 DIA. HOLE IN BOLT HEAD & LUG PRIOR TO ASSEMBLY. LOCK ON COMPLETION.

STI / VAMPIRE / 181A

DR. BY R C W 10.10.58

ASSY OF RUDDER STATIC BALANCE ARM

R 15 CF 103

Air Headquarters,
Royal Rhodesian Air Force.

R.R.A.F. Technical Order.
Vol. 3. Sect. 2. Sub.Sect. D 82.(Issue 1).

4th March, 1959.

(A) Special Technical Instruction/Vampire/185
Omission of Rivets from Fin Spar

(B) Vampire Mk. T.11 Aircraft — On which Repair Scheme R.15 TF.101 has been effected in accordance with S.T.I./Vampire/148.(RRAF T.O. Vol.3/ Sect. 2./Sub.Sect.D49(Issue 3).

(C) Cases have been reported of Repair Scheme R.15.TF.101 not being completely embodied inas much as Rivets A.G.S.2046/508, which secure the Box Bracket, Part No. R.15.TF.102, Ref. 26.DV/8280, to the rear face of the Fin Spar, have been omitted.

(D) CLASS "C" Within 28 Days of receipt of this Instruction, proceed as follows :-

(a) Check the area of the Box Bracket, Part No. R.15.TF.102, Ref. 26.DV/8280, which shows above and below the Rudder Top Hinge Bracket, Part No. R.15.TF.107/ND, for the presence of 8 off (4 above and 4 below) 5/32 inch diameter Chobert rivets.

(b) Where rivets are found to be fitted, no further action other than recording is necessary.

(c) Where rivets have been omitted, they are to be fitted as called for in R.R.A.F. T.O. Vol. 3. Sect. 2. Sub.Sect. D.49. Para (D) 8.

Estimated Man Hours : To Check, 5 mins.
To Rectify, 4 hours per Fin.

(E) Record on Forms 700 and 4801.

(F) Nil.

(G) Nil.

(B.H. GIBBONS)
Wing Commander
S.T.S.O.
A.H.Q. R.R.A.F.

Source : A.287439/57/Air.Eng.1b.

Distribution :-

One copy to all essential recipients plus the following :-

W.O. E.R.S. (2)

Air Headquarters,
Royal Rhodesian Air Force.

4th March, 1959.

R.R.A.F. Technical Order.

Vol. 3. Sect. 2. Sub.Sect. D81. (Issue 1).

(A) Special Technical Instruction/Vampire/183
Hydraulic System : Incorrect Routeing of Flap Lines

(B) Vampire Mark FB9, and T.11 aircraft.

(C) Instances have occurred of the end adaptor breaking away from the flexible hose of the flap "Up" line. Tension at this point could be imposed, during flap operation, by incorrectly routed rigid pipes at the clamp block on the wing spar, or incorrectly placed lashing on the flexible hoses, at the flap jack installation.

(D) Class "C" Within 28 Days of receipt of this Instruction proceed as follows :-

(a) Refer to A.P. 4099J. Vol. 1. Sect. 3. Chap. 6. Fig. 3 (A.L.70), the details are similar for Mk. FB9 aircraft.

(b) Inspect the flexible hoses in Flap 'up' and 'down' lines for signs of deterioration particularly near the end connections. Renew as necessary.

(c) Ensure that the rigid 'Up' line is correctly routed to the uppermost position in the clamp block (as illustrated in the A.P.). Reposition the rigid pipes as necessary.

(d) Ensure that the hoses are correctly lashed together with waxed cord (as illustrated in the A.P.) so that no undue strain is imposed on the adaptors during flap operation. It is emphasised that the geometrics of the flap actuating mechanism are such that the maximum hose stretch is not obtained with the flaps fully down, but at some intermediate position.

Estimated Man Hours : 15 mins. (plus rectification time)

(E) Record on the Forms 700 and 4801.

(F) Nil.

(G) Nil.

(B.H. GIBBONS)
Wing Commander
S.T.S.O.
A.H.Q. R.R.A.F.

Source : A296114/58/Air.Eng.1b.

Distribution :-

One copy to essential recipients
plus the following :-

W.O. A.R.S. (2)

Air Headquarters,
Royal Rhodesian Air Force.

R.R.A.F. Technical Order.
Vol. 3. Sect. 2. Sub.Sect. D.80.

2nd March, 1959.

(A) Special Technical Instruction/Vampire/184
Fin Top Assembly, Top Hinge Bracket : Fractured

(B) 1. Vampire Mark 9, and T.11 aircraft.

2. Items Part No. J00.825,
Reference 26FC/3169 (Pre Mod. 3508) or Part No. J00.1981,
Reference 26FC/12611 (Post Mod. 3508) held as spare or in Store.

3. STI/Vamp/148B Issue 3(R.R.A.F. Technical Order. V3/2/D49.Issue 3) Satisfies Vamp Mod. 3508 for R.R.A.F.

(C) Cases have been reported of cracks being found in the top hinge bracket, (fin top assembly). In each case the defect was in the web of the bracket, just above the base flange, and was considered to have been caused during the Foundry process.

(D) 1. This is a Class 'D' Instruction.

Within 3 months of receipt of this Instruction, proceed as follows:-

(a) Remove the rudders; remove the paint from the top hinge bracket situated on the fin top assembly, Part No. J00.825, Ref: 26FC/3169, or Part No. J00.1981, Ref. 26FC/12611, then carry out "ARDROX" or similar crack detection test.

(b) Where no defect is present, restore aircraft to normal.

(c) Where any sign of a crack exists change the top hinge bracket.

Estimated Man-hours : 3

2. Items listed in para. (B)2 held as spare or in Store are to be tested by an "ARDROX" or similar crack detection method prior to assembly and labelled "STI/Vampire /184 Satisfied".

(E) Record on the appropriate Forms, and label Spare or Stored items as STI/Vamp/184 (V3/2/D80) satisfied.

(F) Nil.

(G) Nil.

(B.H. GIBBONS)
Wing Commander
S.T.S.O. A.H.Q. R.R.A.F.

Source : A.287439/57/Air.Eng.1b.

Distribution :-

One copy to essential recipients plus the following :-

W.O. A.R.S. (2)
O.C. C.E.D. (2)

W/ CORIES

Air Headquarters,
Royal Rhodesian Air Force.

15th January, 1959.

R.R.A.F. Technical Order.
Vol. 3. Sect. 2. Sub.Sect. D79 (Issue 1).

(A) Special Technical Instruction/Vampire/182
Elevator Quadrant Guard - End Plate Fouled
(Preliminary warning/Vampire/13 refers)

(B) Vampire Mark T.11 aircraft Post Vampire Modification 3545.

(C) Cases have occurred of jammed Aileron Controls when the Port Ejection Seat is in the fully down position, due to :-

(a) The Taper Pin of the Port end of the Ejection Seat Counter Shaft bearing down on the End Plate, Part No. 15.F.3639A/ND., introduced by Vampire Mod. 3545.

(b) Foul between Rivets of the Seat Pan and the same End Plate.

(D) 1. This is a CLASS 'A' Instruction. Immediately on receipt of this Instruction proceed as follows:-

(a) Locate the End Plate, Part No. 15.F.3639A.N.D., which is situated in the Cockpit (A.F.4099J, Vol.1, Part 1, Leaflet D.15, Drawing No. A.P.4099J/D15/57, Sheet 1, "Details of Installation of new End Plate to Port Aft False Floor", refers), and trim back the inboard edge until the upper vertical portion is flush with the Elevator Quadrant Cover Box, and the sloped and lower vertical portions are flush with the False Floor.

(b) Check for full and free movement of the Aileron Controls with the Port Ejection Seat in the fully down position.

Estimated man hours : 4.

(E) Record on the appropriate Form.

(F) Nil.

(G) Nil.

A Modification is being prepared.

(B.H. GIBBONS)
Wing Commander
S.T.S.O. A.H.Q. R.R.A.F.

Source : A.199466/54/Air.Eng.1b.

Distribution :-

One copy to essential recipients
plus the following:-

W.O. A.R.S. (2)

(E) Record on the appropriate Forms and label spare or Stored items.

(F) Nil.

(G) Nil.

(R.M. PARRY)
Flight Lieutenant
For S.T.S.O. A.M.Q. R.R.A.F.

Source : A.296119/58/Air.Eng.lb.

Distribution :-

One copy to essential recipients
plus the following :-

W.O. A.R.S. (2)
W.O. Components (2)

113.
123.

Air Headquarters,
Royal Rhodesian Air Force.

R.R.A.F. Technical Order.
Vol. 3. Sect. 2. Sub.Sect. D78. (Issue 1).

8th October, 1958.

(A) Special Technical Instruction/Vampire/177A
Cancelling S.T.I./Vampire/177)
Main U/C Jack Operating Levers: Inadequate Lubrication

(B) 1. Vampire 9, and T.11 Aircraft.

2. Bushes Part No.G.0086 (Ref. 26FC/3601) and Lever Jack Operating Ref.26FC/10060 Part Nos. G00. 1007A (Starb'd) and Ref. 26FC/10061 Part No. G00. 1008A (Port).

(C) Cases have been reported of rapid wear between the Bush located in the Main Undercarriage Operating Lever and the Jack Attachment Bolt, due to grease not reaching the inner circumference of the Bush.

The bushes should have been drilled on assembly through the lever, and the exit hole in the lever should have been plugged to prevent escape of grease.

Either the drilling or the plugging operations may have been omitted.

(D) This is a Class D Instruction. 1. Within 6 months of receipt of this Instruction proceed as follows on Port and Starboard Sides:-

(a) Remove Wheel and Leg Fairing.

(b) Disconnect Undercarriage Jack from Operating Lever.

(c) Remove Small Boom Fairing (underside of mainplane near top of leg).

(d) Remove bolt securing Lower Radius Rod to leg.

(e) Remove Down Micro Switch.

(f) Swing leg inboard.

(g) Fit Grease Gun to nipple on operating arm and inject grease. Where grease enters inside of Bush Part No.G.0086 the bush is already drilled.

(h) If the bush has been drilled then plug the exit hole (as in j(2) below) with the lever in Situ.

(j) If the bush has not been drilled remove the operating lever and rectify, noting that the bush will probably be worn and require renewal:-

(i) Drill a 3/32 inch hole through the existing grease groove and across either the bush, prior to insertion, or across the bush and lever assembly.

(ii) Plug the exit hole on the edge of the lever using a 3/32 inch steel taper Pin MGS.167/13 which is not to enter the lever by more than ¼ inch. File pin flush and lock in position with centre punch around edge.

(k) Restore aircraft to normal.

2. Estimated Man-hours: 5 per a/c.

3. Item quoted at Para. (B)2 above held as spare or in Store are to be rectified prior to Installation or Issue as applicable.

Air Headquarters,
Royal Rhodesian Air Force,

7th November, 1958.

R.R.A.F. Technical Orders
Vol. 16, Amendments.
Amendment No. 288.

Amending :- Vol. 3. Sect. 2. Sub.Sect. D78 (Issue 1)
STI/Vampire/177A.

ACTION :- Action of this S.T.I. is to be witheld pending availability of Bushes G.0086 and 3/32" taper pins AGS/167/13. This amendment will be cancelled when P.S.C.O. notify Tech Stats of dues in.

(B.H. GIBBONS)
Wing Commander
S.T.S.O. A.H.Q. R.R.A.F.

Source : PSCO/Tech Stats.

Distribution :

One copy to essential recipients plus the following :

W.O. A.R.S. (2)
W.O. Components (2)

Air Headquarters,
Royal Rhodesian Air Force.

22nd September, 1958.

R.R.A.F. Technical Order.
Vol 3. Sect. 2. Sub.Sect. D77(Issue 1)

(A) Special Technical Instruction/Vampire/178
Elevator Control System : Displacement of Pulley Guard

(B) Vampire Mk. 10 and T.11, Aircraft.

(C) A case has been reported where on a Vampire Mk. T.11 aircraft interference occurred between the forward top attachment bolt, Part No. 13.CF.341A, 26.FC/5279, of the intermediate pulley bracket, Part No. 13.C F.151, Ref. 26.FC/5276, (which is situated in the Main Fuel Tank Bay at the lower edge of the air intake duct opening) and the cable guard, Part No. 13.CF.275, Ref. 26FC/5277, of the forward top pulley. In this instance the cable guard had been displaced to the extent that it acted as a brake upon the pulley and prevented its rotation. This caused the elevator control cable to wear a flat on the bottom and side of the pulley channel.

(D) "Class D"

1. Within 3 months of receipt of this Instruction proceed as follows:-

(a) Locate the bank of pulleys situated on the bottom edge of the port air intake duct opening in the main fuel tank bay.

(b) Ensure that adequate clearance exists between the inner end of the forward top special captive bolt and the outer face of the forward top pulley guard. Clearance is to be obtained by cropping off the end from the offending bolt.

(c) Operate the elevator control run and ensure the subject pulley turns with the cable movement.

Estimated Man Hours : To Check : ½
Rectification : 1½

(E) Record on the appropriate Form.

(F) Nil.

(G) Nil.

(R.M. PARRY)
Flight Lieutenant
For S.T.S.O. A.H.Q. R.R.A.F.

Source : (A.287439/57/Air.Eng.1b

Distribution :-

One copy to essential recipients plus the following :

W.O. No. 2. Squadron (2)
W.O. A.R.S. (2)

Air Headquarters,
Royal Rhodesian Air Force.
23rd May, 1958.

R.R.A.F. Technical Order
Vol.3, Sect.2, Sub-Sect.D75
(Issue 1)

A. SPECIAL TECHNICAL INSTRUCTION/RRAF/VAMPIRE/17
ELECTRICAL CABLE BETWEEN FUEL BOOSTER PUMP AND SUPPRESSOR: CHAFING GUN BREECH BLOCK.

B. All Vampire aircraft.

C. A case has been reported of the cable from the suppressor unit to the booster pump fouling and chafing on the rear face of No.3 gun breech block, causing a short circuit and a risk of fire.

D. Within 7 days of receipt of this instruction and whenever the cable has been disturbed the following procedure is to be carried out:-

1. Inspect the routing and clipping of the metalised cable, from the suppressor unit to the booster pump in the gun bay.

2. Ensure that the cable is secured by two clips to the base of the fuel tank and by a further two clips, one secured to the ferrule attaching the support to the cannon bay floor near the suppressor, and the other secured to the side of the wood member supporting the hydraulic accumulator.

E. Record initial inspection on the appropriate forms.

F. Nil

G. Nil

(B.H. GIBBONS),
Wing Commander,
S.T.S.O., R.R.A.F.

Source: D.H. Tech. News Sheet Series V No. 728 Issue 1.

Distribution: One copy to essential recipients plus the following:-

W.O. No.1 Squadron:	2
W.O. No.2 Squadron:	2
W.O. A.R.S.:	1

Air Headquarters,
Royal Rhodesian Air Force.
8th May, 1958.

R.R.A.F. Technical Order
Vol. 3, Sect. 2, Sub Sect. D74 (Issue 1)

A) Special Technical Instruction/R.R.A.F./Vampire/16 Class E
Rudder Main Posts Chafing Fairings Rear End of Tail Booms

B) All Vampire Aircraft.

C) A case has been reported of the rudder main posts chafing the fairings Part No. J00905A Port and J00906A Starboard at the rear end of the tail booms.

D) Not later than the next minor servicing proceed as follows:-

(a) Remove the fairings and examine for signs of chafing.

(b) Where chafing is evident, dress back flange of fairings to give adequate clearance.

(c) Carry out necessary anti-corrosive treatment of rudder posts and fairings.

(d) Where no chafing has occurred or after carrying out necessary rectifications refit the fairings.

E) Record on the appropriate forms.

F) Nil

G) Nil.

Source: S.....F. Tech. Order Vampire D 188

(B.H. GIBBONS)
Wing Commander
S.T.S.O.
A.H.Q. R.R.A.F.

Distribution;

One copy to essential recipients
plus the following:-

W.O. No. 1 Squadron (2)
W.O. No. 2 " (2)
W.O. Components Section (2)

Air Headquarters,
Royal Rhodesian Air Force.
8th May, 1958.

R.R.A.F. Technical Order
Vol. 3. Sect. 2. Sub Sect. D73 (Issue 1)

A) Special Technical Instruction/Vampire/172
Fire Extinguisher in Cockpit: Incorrect Bracket

B) 1. Vampire T.11 aircraft embodying Mod. 3414.
2. Mod. 3414 kits held as spare or in Store.

C) Two "near misses" have occurred where the manually operated fire extinguisher fitted in the cockpit by Mod. Vampire 3414 has come adrift during aerobatics. It was found that the bracket was Ref. 27N/85 instead of Ref. No. 27N/106 as required by the Mod. leaflet. The correct bracket is fitted with an all round retaining clip for the extinguisher, and is satisfactory.

D) This is a CLASS 'B' instruction. Within 7 days of receipt of this Instruction proceed as follows:-

(a) Check the manually operated fire extinguisher bracket fitted in the cockpit, and if it is fitted with spring tongs for securing the extinguisher it is Ref. No. 27N/85, which is incorrect and is to be replaced by bracket Ref. No. 27N/106.

E) Record on appropriate forms.

F) Nil

G) Nil

Source: A.M. A.207144/54/Air.Eng.1b

(B.H.GIBBONS)
Wing Commander
S.T.S.O.
A.H.Q. R.R.A.F.

Distribution:

One copy to essential recipients
plus the following:-

W.O. No. 1 Squadron (2)
W.O. No. 2 " (2)
W.O. A.R.S. (1)

Air Headquarters,
Royal Rhodesian Air Force.
5th March, 1956

R.R.A.F. Technical Order
Vol. 3, Sect. 2, Sub Sect. D72 (Issue 1)

A) Special Technical Instruction /Vampire/171
Cancelling S.T.I./Vamp/150 Vol.3-2-D46, 150A and 155 Vol.3-2-D50
Emergency Oxygen System: Change of Position

B) Vampire T.11 aircraft

C) With the emergency oxygen operating cable routed as detailed in S.T.I./Vampire/150, it is possible for the cable to loop over the seat - height adjusting handle during manoeuvres involving negative 'G'. The emergency oxygen installation is therefore to be modified as detailed below.

D) 1. This is a Class 'B' Instruction. Within 7 days of receipt of this Instruction proceed as follows:-

(a) Disconnect the anchor hook from the static line.

(b) Disconnect the knurled and screwed union connecting the emergency oxygen operating cable to the anchor section of the static line.

(c) Remove the end fitting of the operating cable housing from the anchor socket.

(d) Lift the cushion containing the emergency oxygen cylinder and ensure that the cylinder is placed in its stowage, to achieve the routing shown in the attached sketch (S.T.I./Vampire/150 referred).

(e) Cut the whipping securing the black andyellow F.V.C. sleeve to the operating cable housing and slide the sleeve introduced by S.T.I/ Vampire 155 and by Mod. G.13 along the housing until it abuts the anchor socket and fitting of the housing.

(f) Secure each end of the sleeve by whipping with kite cord.

(g) Pass the operating cable through the two loops on the underside of the cylinder stowage and then through the front tunnel on the right-hand side member of the parachute harness (see the drawing attached).

(h) Lower the cushion and refit the emergency oxygen cylinder between the front inside edge of the seat pan andthe front of the personal survival pack.

(j) Connect the knurled and screwed union on the operating cable to the corresponding union on the anchor section of the static line and engage the end fitting of the operating cable housing in the anchor socket.

(k) Connect the anchor hook to the static line.

Estimated man hours - ½

/Page 2 .....

E) Record on Forms 700 and 4801 as STI/Vamp/171.

F) Nil

G) Previous satisfaction of S.T.I./Vampire/150 will render compliance with para (D) 1.(d) above unnecessary.

Source: A.M. A.243631/56/Air Eng.4

(B.H. GIBBONS)
Wing Commander
S.T.S.O.
A.M.S. R.R.A.F.

Distribution:

One copy to essential recipients plus the following:-

Station Specialist Officer	(1)
W.O. Safety Equip. Section	(2)
W.O. Armament Section	(2)
W.O. Instrument Section	(2)
W.O. Components	(2)
W.O. A.R.S.	(1)
W.O. No. 1 Squadron	(2)
W.O. No. 2 "	(2)

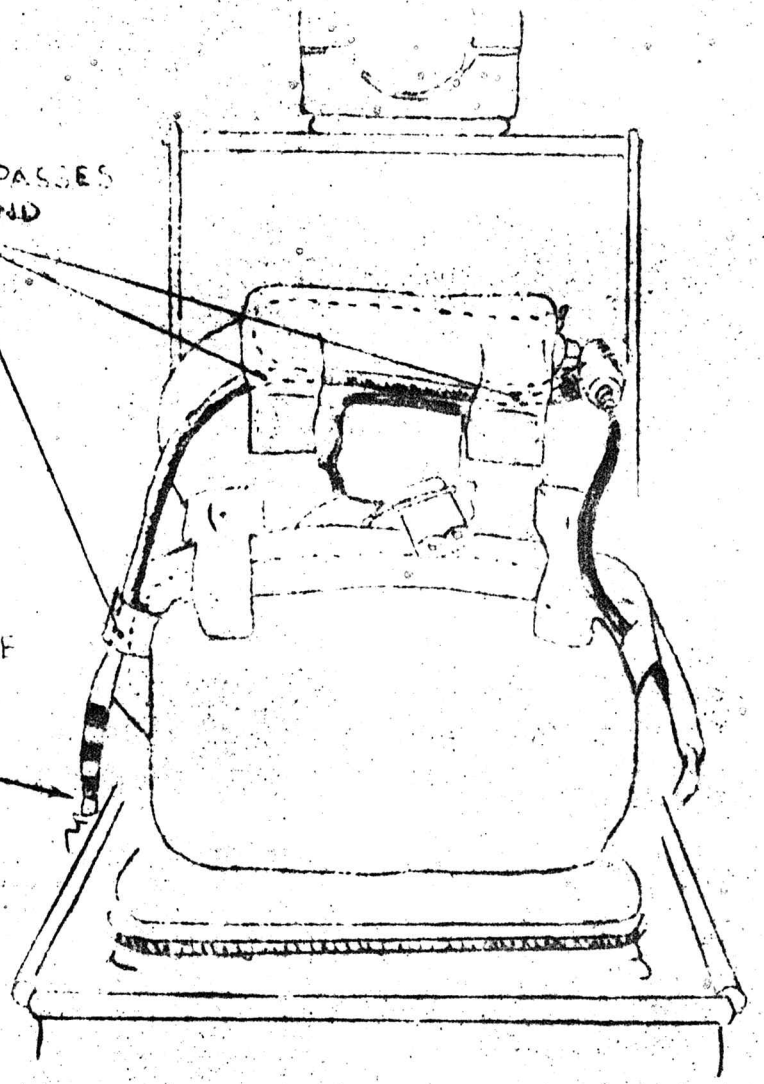

MODIFIED E.O INSTALLATION
(VIEW UNDERSIDE SEAT PAD)

S.T.I/VAMPIRE/171

Air Headquarters,
Royal Rhodesian Air Force.

R.R.A.F. Technical Order
Vol. 3, Sect. 2, Sub Sect. D71 (Issue 1)

26th February, 1958

A) Special Technical Instruction/RRAF/Vamp/15
Incorrect routing of Upper Flexible Brake Hoses 26FC/10323 CLASS A

B) Vampire Mk. 9 and Mk. T.11 Aircraft

C) Cases have been reported of the incorrect routing of port and starboard flexible brake hoses (26FC/10323 Part No. A.N.O./16203). These hoses have been routed between the light alloy air pipe (26FC/4851 Port, 26FC/4858 Starboard) and wheel well rear diaphragm, causing jamming of the hoses when the undercarriage is lowered with the consequent fracturing of the hoses.

D) (1) Before the next flight all Vampire aircraft are to be inspected for this defect, and rectified where necessary.

(2) Rectification consists of re-routing the brake hoses (26FC/10323) forward of the air pipe (26FC/4851 Port, 26FC/4858 Starboard) and not, repeat not, between the pipe and the wheel well diaphragm.

E) Record on the appropriate Forms. Where action has already been taken under RRAF Signal T11 or A.M. Signal T904 Air Eng 1 retrospective recording action is to be taken.

F) Nil

G) Nil

Source: A.M. Signal T/904 Air Eng 1
Dated 22/2/58

(B.M. GIBBONS)
Wing Commander
S.T.S.O.
A.H.Q. R.R.A.F.

Distribution:

One copy to essential recipients plus the following:-

W.O. A.R.S. (1)
W.O. No. 1 Squadron (2)
W.O. No. 2 " (2)
W.O. Components Section (2)

Air Headquarters,
Royal Rhodesian Air Force.
11th December, 1957.

R.R.A.F. Technical Order
Vol. 3, Sect. 2, Sub Sect. D69 (Issue 1)

A) Special Technical Instruction/RRAF/Vampire/13
Wheel Brake Air Pressure System: Pipe Cracking

B) All Vampire aircraft.

C) A case has been reported of the pipe from the Fireproof bulkhead to the charging valve "Tee" piece (Stores Ref. 26FE/4767, Part No. Q.00461A/ND) cracking at the point where it passes through the fireproof bulkhead.

D) On receipt of this instructions and no later than the next primary servicing examine the pipe in question and ensure that there are no defects.

E) Record on the appropriate forms.

F) Submit a report of the findings of this examination to Tech. Stats. A.HQ.

G) Nil

Source: F.1022 Ser. No. 1924: RDA 4727

(D.H. GIBBONS)
Wing Commander
S.T.S.O.
A.H.Q. R.R.A.F.

Distribution:

One copy to essential recipients
plus the following:-

W.O. A.T.S. (1)
W.O. No. 1 Squadron (2)
W.O. No. 2 " (2)

Air Headquarters,
Royal Rhodesian Air Force.
10th December, 1957.

R.R.A.F. Technical Order
Vol. 3, Sect. [illegible], Sub Sect. D68 (Issue 1)

CLASS B

A) Special Technical Instruction/RRAF/Vampire/12

Main Undercarriage Jack Top Attachment Bolt - Failure

B) Vampire aircraft all marks.

C) A case has occurred where a main undercarriage jack top attachment bolt Sect. Ref. 26FC/4626 (Part No. GOO/1825), which is pre-mod 3153, had failed. The correct bolt should be to Mod 3153 standard, i.e. Sect. Ref. 26FC/6446 (Part No. GOO/1901, Qty 2 per aircraft.

Note: All R.R.A.F. Vampire aircraft are to Mod 3153 standard.

D) At the first opportunity but not later than the next Primary Star servicing physically check the main undercarriage jack top attachment bolts, Port and Starboard to ensure that the correct bolt 26FC/6446 (Part No. GOO/1901) is fitted.

Note: Bolts with correct Part numbers may or may not differ to pre-mod bolt in the appearance of the head. Where pre-mod bolts are found these are to be changed.

E) Record on the appropriate Forms

F) Report all cases of pre-mod 3153 standard bolts to Air Headquarters.

G) Nil

Source: A.M. Signal T5741/Air Eng 16

([illegible]. PRINGLE)
Squadron Leader
A/S.E.S.O.
A.H.Q. R.R.A.F.

Distribution:

One copy to essential recipients plus the following:-

W.O. No. 1 Squadron	(2)
W.O. No. 2 "	(2)
W.O. A.R.S.	(1)
O.C. Equipment Depot	(2)

Air Headquarters,
Royal Rhodesian Air Force.
10th December, 1957.

R.R.A.F. Technical Order
Vol. 3, Sect. 2, Sub Sect. D67 (Issue 1)

A) Special Technical Instruction/Vampire/169
Elevator Quadrant Clamp Bolt (28D/8310) Aileron Control Cable (26FC/6825) in Cockpit: Fouling

B) Vampire T.11 aircraft

C) Cases have been reported where the upper outboard clamp bolt, 28D/8310, on the elevator quadrant may foul the aileron cable, 26FC/6825.

D) 1. Class B. As soon as possible and not later than 7 days of receipt of this Instruction proceed as follows:-

(a) Locate the bolts which secure the top and bottom outboard cable retaining clamps to the elevator quadrant in the cockpit.

(b) Crop off the protruding threads of each bolt flush with the outer face of its slotted nut.

N.B. Care must be exercised to ensure that the portion of bolt which is cut off is removed from the cockpit.

Estimated Man Hours - 2

E) Record on the appropriate Form.

F) Nil

G) Nil

Source: A.M. A.132040/52/Air Eng 1b

(H.J. PRINGLE)
Squadron Leader
A/S.T.S.O.
A.H.Q. R.R.A.F.

Distribution:

One copy to essential recipients plus the following:-

W.O. No. 1 Squadron (2)
W.O. No. 2 " (2)
W.O. A.R.S. (1)

Air Headquarters,
Royal Rhodesian Air Force.
10th December, 1957.

R.R.A.F. Technical Order
Vol. 3, Sect. 2, Sub Sect. D67 (Issue 1)

A) Special Technical Instruction/Vampire/169
Elevator Quadrant Clamp Bolt (28D/8310) Aileron Control Cable (26FC/6825) in Cockpit: Fouling

B) Vampire T.11 aircraft

C) Cases have been reported where the upper outboard clamp bolt, 28D/8310, on the elevator quadrant may foul the aileron cable, 26FC/6825.

D) 1. Class B. As soon as possible and not later than 7 days of receipt of this Instruction proceed as follows:-

(a) Locate the bolts which secure the top and bottom outboard cable retaining clamps to the elevator quadrant in the cockpit.

(b) Crop off the protruding threads of each bolt flush with the outer face of its slotted nut.

N.B. Care must be exercised to ensure that the portion of bolt which is cut off is removed from the cockpit.

Estimated Man Hours - 2

E) Record on the appropriate Form.

F) Nil

G) Nil

Source: A.M. A.132040/52/Air Eng 1b

(H.J. PRINGLE)
Squadron Leader
A/S.T.S.O.
A.H.Q. R.R.A.F.

Distribution:

One copy to essential recipients plus the following:-

W.O. No. 1 Squadron (2)
W.O. No. 2 " (2)
W.O. A.R.S. (1)

Air Headquarters,
Royal Rhodesian Air Force.
27th November, 1957.

R.R.A.F. Technical Order
Vol. 3, Sect. 2, Sub Sect. D66 (Issue 1)

A) Special Technical Instruction/RhAF/Vampire/11 Class C
Inadequate Clearance between Flying Control Cables and Fire Detector Mounting Strip Assembly

B) Vampire all Marks

C) A case has been reported of inadequate clearance between the flying control cables and the fire detector mounting strip assembly Part No. L003559A Port and L003561A starboard on the inboard side of mainplane rib No. 1.

D) This S.T.I. to be carried out in two parts.

Part 1 Within 28 days of receipt of this instruction the following action is to be taken:-

(a) Inspect the flying control cables on the inside of mainplane rib No. 1 port and starboard for adequate clearance between the cables and fire detector mounting strip assembly.

(b) Where inadequate clearance is found Part 2 of this instruction is to be complied with.

Part 2 At the next engine removal proceed as follows:-

(a) Locate the fire detector mounting strip assemblies on the inboard side of mainplane rib No. 1.

(b) Disconnect the electrical cables at the fire detector units and remove the detector units Stores Ref. 27N/90, 4 off port and 4 off starboard.

(c) Remove and retain the clips securing the electrical cables to the mounting strips.

(d) Remove the fire detector mounting strip assemblies from the aircraft and carefully remove the detector mounting brackets by removing the mild steel rivets without damaging the strips.

(e) Replace the mounting strip to mainplane rib No. 1 and pack with suitable washers to give adequate clearance between mounting strip and flying control cables.

(f) Replace all electrical cables and secure with clips retained in operation (c).

(g) Tape up the ends of the electrical cables previously connected to the detector units with asbestos tape and secure them to the existing asbestos lagging with asbestos yarn Stores Ref. 32B/20, obtainable as required from Central Flight Stores, Ma intenance Unit.

E) Record on Forms 700 and 480A. Retrospective recording action is to be taken where the requirements of this S.T.I. are found to be satisfied.

F) Nil

G) Embodiment of Mod. Vampire 3475 which will by published in the near future, will render compliance with this instruction unnecessary.

Source: STI/SAAF/Vamp/40 Dated 6th August, 1957.

Distribution:

One copy to essential recipients
plus the following:-

S.E.S.O.	(1)
Station Specialist Officer	(1)
O.C. Equipment Depot	(2)
W.O. Electrical Section	(2)
W.O. E.R.S.	(2)
W.O. Components Section	(2)
W.O. No. 1 Squadron	(2)
W.O. No. 2 "	(2)

(H.J. SPINGLE)
Squadron Leader
i/S.T.S.O.
A.H.Q. R.R.A.F.

Air Headquarters,
Royal Rhodesian Air Force.

10th October, 1957

R.R.A.F. Technical Order
Vol. 3, Sect. 2, Sub Sect. D65 (Issue 1)

A) Special Technical Instruction/RRAF/VAMPIRE/10

Canopy Hatch Jettison Jack

Clamp Bolt Groove Incorrectly Positioned

B) Vampire No. 11 Aircraft

C) It has been found that a replacement hatch jettison jack, as received from Stores, could not be fitted to an aircraft; the groove for the clamp bolt at the ram end of the jack body being 180° out of position relative to the hydraulic pipe adaptor.

D) The existing stock of hatch jettison jacks, Part No. A.I.R. 41754, held as spares should be checked for this condition. Those to issue 4, (A.I.R. 41754/4), are not affected, but jacks of earlier issues should have an additional groove cut at 180° to the existing one and identical to it.

(a) A Form 6 is to be raised by the Equipment Section for the additional groove to be machined by the General Engineering Section, M.U.

(b) The centre of the additional groove should be 1.2 inches from the cylinder end, (not 1.1 inch as for the existing groove, because this permits some movement between the jack and the steady bracket, and requires the use of a pin between the two parts).

NOTE: The jacks to issue 4 have the cylinder head turned through 180° and also the dimension between the groove centre and the cylinder end has been increased from 1.1 inch to 1.2 inches.

E) On completion of the above, the jacks part numbers will be altered to "A.I.R. 41754/4"

F) The additional grooves and the bare metal made by stamping the alteration to Part Number are to be given a suitable anti-corrosive treatment.

G) Nil

Source: D... E... 7709
Dated 9/9/57

(B.H. GIBBONS)
Wing Commander
S.T.S.O.
A.H.Q. R.R.A.F.

Distribution:
One copy to essential recipients
plus the following:-

S.E.S.O.	(1)
O.C. Equipment Depot	(1)
Officer i/c G.E...	(2)
W.O. Components Section	(2)
W.O. i/c G.E.S. M.U.	(2)
O.C. A.E.S.	(1)
O.C. No. 5 Squadron	(2)
O.C. No. 2 "	(2)

Air Headquarters,
Royal Rhodesian Air Force.
11th October, 1957.

R.R.A.F. Technical Order
Vol. 3, Sect. 2, Sub Sect. D63 (Issue 2)
Cancelling and superseding
Issue 1 Dated 12th July, 1957

A) Special Technical Instruction/[illegible]/VAMPIRE/9[illegible]
Superseding and cancelling [illegible]/VAMPIRE/9[illegible]
Engine Mounting Top and Bottom Bracing
Tubes Part No. L001270[illegible] and L001271[illegible]
Attachment Bolt Threads Chaining Fork End Lugs

B) Vampire Aircraft

C) Cases have been reported of excessive wear in the top and bottom bracing tube fork and bolt holes on the engine mounting, due to the shank of the existing bolts being too short, thus allowing the threaded portion of the bolts to wear away one end of the fork end, also mild steel bolts were fitted in place of high tensile steel bolts.

(1) Within 3 months of receipt of this instruction the existing bolts securing the bracing tubes to the engine mounting are to be replaced by bolts Stores Ref. 28D/1263[illegible], Washers 28W12254, Nuts 28M/13122 and Pins, split 28P/12726.

E) Record on Form 4801 and 700.

F) Nil

G) Nil

Source: [illegible]/[illegible]/VAMP/[illegible]
Dated [illegible] August 1957

(B. [illegible]. GIBBONS)
Wing Commander
S.T.S.O.
A.HQ. R.R.A.F.

Distribution:

One copy to essential recipients plus the following :-

W.O. No. 1 Squadron	(3)
W.O. No. 2 "	(3)
W.O. Components Section	(1)
W.O. [illegible]	(2)
W.O. [illegible]	(2)

Air Headquarters,
Royal Rhodesian Air Force.

27th May, 1957

R.R.A.F. Technical Order
Vol. 3. Sect. 2. Sub Sect. D62 (Issue 1)
Superseding and Cancelling:-
Vol. 4. Sect. 2 Sub Sect. A 17 (Issue 1)

A) Special Technical Instruction/Vampire/164

Vokes Air Filter (B.P.C. Total Air Line) : Incorrect fitting

B) 1. Vampire Mk FB 9 and N.F. 10 and T. 11 aircraft.

2. Vokes Air Filters, Part No. C. 44493, (26FC/11808), held as spare or in store.

C) Certain early Vokes Air Filters Part Numbers C.44493 may be without indication of the correct direction of air flow, in which case, under certain conditions the residue collected by the filter could find its way into the B.P. Control.

D) Class 'C'

1. Within 28 days of receipt of this Instruction proceed as follows:-

(a) Inspect the Vokes Air Filter fitted to aircraft and ensure that the "Flat end" of the filter is "inlet" and the "curved" end connects to the pipe to the B.P. Control Unit.

(b) Where the filter is fitted in this way paint on the filter casing an arrow indicating the correct direction of air flow.

Note: The direction of air flow through the filter is from the "flat end" inlet to the "curved" end outlet.

(c) Where the filter is not so connected remove it from the aircraft, fit a new element and paint an arrow on the casing of the filter showing the direction of air flow.

(d) Refit the filter to the aircraft ensuring that it conforms to Para (D) 1 (a) above.

2. Vokes Air Filters held as Spares or in Store are to be checked to ensure that identification of air flow is clearly shown, prior to Installation or Issue as applicable.

E) Record on appropriate form.

F) Nil.

G) Nil.

Source: A.M. A.199453/54/Air Eng 1b,
Dated 14th May, 1957.

(B.H. GIBBONS)
Wing Commander
S.T.S.O.
A.H.Q. R.R.A.F.

Distribution:

O.C.M.U.	(1)
Tech. Control M.U.	(1)
A.R.S.	(2)
E.R.S.	(2)
No. 1 Squadron	(3)
No. 2 "	(3)
O.C. Equip. Depot	(1)
S.E.S.O.	(1)
Tech. Stats.	(2)

Air Headquarters,
Royal Rhodesian Air Force.

28th May, 1957

R.R.A.F. Technical Order
Vol. 3, Sect. 2, Sub Sect. D61 (Issue 1)
Cancelling and Superseding:-
Vol. 3, Sect. 2, Sub Sect. D34 and
Amendment No. 195 - i.e. STI/VAMP/138 & 138A respectively.

A) Special Technical Instruction/Vampire/163
(Cancelling STI/Vampire/138 and 138A)
Canopy Hatch Internal Release Handle, Lock Lever : Fouling

B) Vampire Mk. T 11 Aircraft (Post Mod. Vampire 3151, Pre Mod. Vampire 3448) - i.e. all R.R.A.F. T.11 Aircraft.

C) Cases have been reported whereby forward movement of the head guard, which is situated on the hatch centre beam, has obstructed the lock lever, Part No. 15FC.1879A, and thus prevented it reaching the "locked" position over the internal release handle, which is hidden from the pilot's view.

D) CLASS 'C'

1. As soon as possible but within 28 days of receipt of this Instruction proceed as follows:-

Part 'A' - Cast Type Hatch:

(a) STI/Vampire/138 Para. D 2 called for the following "With the head guard moved fully forward cut back the starboard front cut-away which accommodates the operating lever and the handle mechanism, to give a 1.0" minimum clearance between the tip of the air seal operating lever, when adjacent to the head guard cut-away. Also trim back rubber to suit."

With the head guard in this condition, remove approximately $4\frac{1}{2}$ inches of its forward portion to expose the hatch centre beam.

(b) Move the head guard fully aft and trim back the "Sorbo" at the front andsufficiently to then drill 2 - 4 B.A. holes through the head guard and lower flange of the hatch centre beam, 0.30 inch from the forward edge of the guard and 0.30 inch from each edge of the centre beam.

(c) With Ref. 28D/8338 Part No. AS.1248/3B 4 B.A. bolts, Ref. 28W/12305 Part No. S.P.13B Washers, and Ref. 28M/13086 Part No. A.27/BP Nuts, secure the head guard to the centre beam. Crop and peen bolts.

Part 'B' - Fabricated Type Hatch:

(a) Complete operation as in Part 'A' sub Para (a) above.

(b) Move the head guard fully aft and locate two convenient rivets in the hatch centre beam lower flange, approximately 1 inch aft from the front end of the guard.

(c) Drill out the two located rivets and open up to 2 BA. through beam and head guard.

(d) Trim away "Sorbo" to accomodate 2 BA bolt heads.

(e) With Ref. 28D/6341 Part No. AS.1248/1C 2 B.A. Bolts, Ref. 28W/12252 Part No. S.P.13C Washers, and Ref. 28M/12929 Part No. A.27/CP Nuts, secure the guard to the centre beam. Crop and peen bolts.

..... 2.

D) 2. With the lock lever in the fully locked position, the inboard portion of the lever which shows below the centre beam must be painted RED. Also paint a RED band, the width of and corresponding to the lever, across the bottom and edges of the centre beam.

Estimated Man-hours: 2

E) Record on the appropriate Forms 700 and 1802.

F) Nil.

G) Embodiment of Modification Vampire 3448 (B/2) will render compliance with this Instruction unnecessary.

Source: AM/STI/VAMP/163.

(B.H. GIBBONS)
Wing Commander
S.T.S.O.
A.H.Q. R.R.A.F.

Distribution:

C.O.M.U.	(1)
Tech. Control M.U.	(1)
A.R.S.	(3)
No. 1 Squadron	(3)
No. 2 "	(3)
O.C. Equipt. Depot	(2)
S.E.S.O.	(1)
Tech. Stats.	(2)

Air Headquarters,
Royal Rhodesian Air Force.

16th April, 1957

R.R.A.F. Technical Order
Vol. 3, Sect. 2, Sub Sect. D 60 (Issue 1)
Vol. 6, Sect. 3, Sub Sect. D 9 (Issue 1)

A) Special Technical Instruction/Vampire/149A Class C
(Amending STI/Vamp/149 - N.A. not issued in R.R.A.F. T.O's.)
Pitot Static System - Kinking of Pipelines

B) Vampire Mk 5 and 9 aircraft.

C) Cases have occurred of kinking and damage to the pitot static pipelines behind the instrument flying panel, due primarily to the poor lay-out of these pipelines.

Within 28 days of receipt of this Instruction proceed as follows:-

Blind Flying Panel

1. Discard the pipe between the panel manifold static connection and the altimeter.

2. Discard the pipe between the panel manifold pitot connection and the pitot connection on the Air Speed Indicator.

Where Artificial Horizons Mark 1D, 1E or Mark 3 are fitted - proceed as follows:-

3. Remove and retain the elbow connection on the A.S.I. pitot connection. Fit 8½" length of flexible tubing (32C/472) to A.S.I. pitot connection for connecting to the aircraft pitot system.

4. Remove and retain the three-way connector on the altimeter and replace it with the elbow connector retained in operation 3. Re-assemble the pipe between the altimeter and A.S.I. static connection.

5. Insert the three way connector from operation 4 in the static pipe line between the A.S.I. and the Rate of Climb Indicator approximately 2½" from the A.S.I. To the third connection of this union attach a 6½" length of flexible tubing (32C/472) for connection to the aircraft's static system.

6. Discard the flexible tubing fitted to the pitot static manifold at the base of panel. This manifold is no longer used.

Where Artificial Horizons Mark 3B or 3C are fitted proceed as follows:

7. Remove and retain the elbow connection, from the A.S.I. pitot connection. Fit a connector, straight, to the A.S.I. pitot connection and fit 1½ inch extension pipe. To this attach a 6½ inch length of rubber tubing (Ref. 32C3472) for connecting to aircraft pitot system.

8. Remove the three-way connector from the A.S.I. static connection. Fit a straight connector to the A.S.I. static connection and fit 1½" extension pipe. To this reconnecto the centre union of the three way connector.

9. Remove and retain the three way connector on the altimeter, and replace it with the elbow connector removed at operation 7. Shape and fit 6" of pipe between the Altimeter and three way connector on A.S.I. static pipe. Using a 1¼" pipe, connect three way connector removed from Altimeter to the remaining union of the three way connector on the A.S.I. static connection. Shape and fit 10" of pipe between this three way connector and the Rate of Climb Indicator passing it over the Artificial Horizon. To the centre connection of this three way connector attach 8½" of rubber tubing (Ref. 32C/472) for connection to the aircraft system.

Aircraft

1. Remove the three way connectors from the ends of the aircraft pitot and static pipelines and retain.

2. Extend the pitot and static pipelines by fitting to each a straight through connector 28V/5104 and a 3¼" and 3" length respectively of low pressure alloy tubing 30B/1195.

3. Refit the three way connectors from operation 1 to the extended pipelines with right angle connection pointing towards the machmeter.

4. Shorten the flexible connections to the machmeter to give a natural run to the tubing. The adjusted lengths will be approximately Pitot 9" and Static 11". Connect to the appropriate three way connector.

5. Refit Blind Flying Panel and connect to pitot and static aircraft pipelines.

6. Carry out a leak test and check for correct connections, i.e. Pitot direct to the Pitot connection on the A.S.I. and Static to the three way connector between the A.S.I. and Rate of Climb Indicator.

PARTS REQUIRED

		Where Artificial Hori	
		Mk. 1B, 1E or Mk 3 fitted	Mk. 3B Mk. 3C fit
28V/5104	Connectors, Straight	2 off	4 off
28V/5108	Nuts, Union	2 off	6 off
32C/472	Tubing Rubber ¼" I.D. x ½" O.D.	2 feet	2 fee
30B/1195	Tubing Alloy 5/16" O.D. x 22 s.w.g.	1 foot	2' 6"
28V/13603	Rings Rubber (AGS.838/5)	18 off	

Estimated man hours: 1½

E) Record on the appropriate Forms 700 and 4801 and file one copy of this Order in each relevant Technical Order Volume.

F) Nil.

G) Nil.

Source: A.M./STI/149 and 149A

(B.H. GIBBONS)
Wing Commander
S.T.S.O.
A.H.Q. R.R.A.F.

Distribution:

O.C. M.U.	(2)
Tech. Control M.U.	(2)
Specialist Officer	(2)
A.R.S.	(4)
Instrument Section	(4)
No. 1 Squadron	(5)
No. 2 "	(5)
S.E.S.O.	(2)
O.C. Equipt. Depot	(3)
Tech. Stats.	(2)

Air Headquarters,
Royal Rhodesian Air Force.

9th April, 1957

R.R.A.F. Technical Order
Vol. 3, Sect. 2, Sub Sect. D 59 (Issue 1)

A) Special Technical Instruction/Vampire/162

Emergency Oxygen Operating Cable: Incorrect Length

B) 1. Vampire Mk. T.11 Aircraft fitted with Ejector Seats

2. Spare Cables Stores Ref. 26FC/NIV Pt. No. 15.S.1167AND held in Stores and in Mod. Kits - Vampire Mod. 3282.

C) The Static Operating Cable for the Emergency Oxygen System Set, Located between the cockpit floor and the anchor assembly on the ejector seat, may be too short causing inadvertent operation of emergency oxygen release when the ejector seat is raised.

The subject cable has been made in two lengths 10 inch and 13 inch under the same Part Number, 15.S.1167AND. The correct nomenclature for the 13 inch cable is 26FC/NIV-Part No. 15.S.1265AND, and this cable, only, should be fitted to aircraft.

D) CLASS 'B'

1. Within 7 days of receipt of this Instruction, proceed as follows:-

(a) Check that all Static Operating Cables measure 13 inches between loop centres.

2. 13 inch static operating cables Part Numbered 15.S.1167AND, held in Stores as Spares or in Mod. Kits (Vampire Mod. 3283) are to be Re-Part Numbered 15.S.1265AND prior to Installation or Issue, as applicable.

E) Record on the appropriate Form.

F) Report any cases where 10" Cables are found to be fitted to Tech. Stats. A.H.Q.

G) Nil

Source: A 199468/54/Air Eng 1b
Dated 25th March, 1957

(B.H. GIBBONS)
Wing Commander
S.T.S.O.
A.H.Q. R.R.A.F.

Distribution:

O.C. M.U.	(1)
Tech. Control M.U.	(1)
A.R.S.	(2)
Instrument Section	(2)
O.C. Equipt. Depot	(2)
No. 1 Squadron	(3)
No. 2 "	(3)
Tech. Stats.	(1)
Armoury	(2)
Safety Eqhip. Section	(1)

Air Headquarters,
Royal Rhodesian Air Force.

26th March, 1957.

R.R.A.F. Technical Order
Vol. 3, Sect. 2, Sub Sect. D 56 (Issue 1)

A) Special Technical Instruction/Vampire/161

Cold Air Unit, Godfrey, Type A.C.R.E.8, Mk. 1A and B:

Oil Reservoir Vent Hole Blocked

B) 1. Vampire Mk. 9 and 11 aircraft.

2. Cold Air Unit Oil Reservoir Assemblies, Pt. No. R00.2621A held as spare or in store.

C) Cases have been reported of oil leaking from the breather holes in the casing of the Godfrey Type A.C.R.E.8, Mk. 1A and 1B, Cold Air Units, and in some instances of the Units having seized in spite of the oil level in the reservoir being correct.

These defects are attributed to the venting hole in the Cold Air Unit Oil Reservoir Assembly, Pt. No. R00.2621A, being blocked, or the result of the 1/64 inch diameter pilot hole in the Mounting Flange, Pt. No. R00.2615 not being subsequently drilled through the Reservoir Support Tube, Pt. No. R00.1879 N.D., on final assembly.

D) 1. Class B. Within 7 days of receipt of this Instruction proceed as follows:-

(a) Remove from the Port wing top surface the C.A.U. Access Panel; do not disconnect the flexible oil feed hose.

(b) Remove the oil filling plug from the reservoir and take out the dip stick and oil filter.

(c) From below the Access Panel locate the Mounting Flange Assembly, which is secured to the C.A.U. Access Panel. On closer inspection it will be observed that the Reservoir Support Tube Assembly is fitted inside the Mounting Flange and welded into position.

(d) Check that the 1/64 inch verticle hole passes through both Mounting Flange and Support Tube; this must be done with a piece of wire or a pin. The vent hole should be located approximately .8 inches below the Access Panel.

(e) In cases where only the Mounting Flange has been drilled and not the Support Tube, to ease the operation of drilling, a 1/32 inch hole is to be drilled through both the Mounting and Support Tube. Care must be taken to prevent the entry of swarf into the oil reservoir.

(f) Re-assemble items disturbed and replenish the oil reservoir, as required.

(g) Replace filler plug.

Estimated Man Hours - ¾

2. Oil Reservoir Assemblies Pt. No. R00.2621A, held as spare or in Store are to be checked and rectified where necessary prior to Installation or Issue, as applicable.

..... 2.

E) Record on the appropriate forms and paint "S.T.I./Vam./161" on Oil Reservoir Assemblies held as spare or in store.

F) Nil.

G) Nil. A.P.4099E & G, Vol, 1, Sect. 4, Chap. 3, Para. 76 for Vampire Mk. 9 and A.P.4099J. Vol. 1, Sect. 3, Chap. 8, Para. 10, for Vampire Mk. T.11 Aircraft.

Compiled: H.J.E.
Typed: B.W.L.
Source: A.M. A96784/51/Air Eng 1b
Dated 6th March, 1957.

J S Hamilton
(J.S. HAMILTON)
Flight Lieutenant
for S.T.S.O.
A.H.Q. R.R.A.F.

Distribution:

O.C. M.U.	(1)
Tech. Control M.U.	(1)
A.R.S.	(2)
No. 1 Squadron	(3)
No. 2 "	(3)
Tech. Stats.	(1)

Air Headquarters,
Royal Rhodesian Air Force,
NEW SARUM.

12th February, 1957.

R.R.A.F. Technical Order.
Vol. 3, Sect. 2, Sub Sect. D.56 (Issue 1)
(To be read in conjunction with R.R.A.F. Volumes 3 Sect. 2, Sub Sect. C 9 and Vol. 3-2-E23.)

N.B. "ISSUED STRICTLY FOR INFORMATION PURPOSES ONLY."

A. Special Technical Instruction/Vampire/76A.
(Cancelling & superseding S.T.I./Vampire/76.)

Drain Pipe at Main Fuel Tank Filler Neck: Damaged by Refuelling Nozzle.

Informatory:

1. This S.T.I. was originally issued by Air Ministry on 24th April, 1953. (For reasons are per para 3 below the S.T.I. was not promulgated by the R.R.A.F.)

2. It applied to all marks of Vampire, and called for a check (at Primary Star Servicing) on damage and fracturing of the main fuel tank filler neck drain pipe caused by the refuelling nozzle. Scarred or damaged pipes were to be blanked off to one or other of two schemes issued under cover of Drgs. ROOP.104 and ROOP.106.

3. On the 22nd October, 1953 the Air Ministry decided that the application of S.T.I./V/76A to all Vampire main fuel tanks was superfluous - and thereby cancelled the S.T.I. with the proviso that "blanking off procedure will, in future, only be applied when fuel leaks due to damage of fractured filler neck drain pipes are discovered."

4. In view of the foregoing it has been decided to issue a local R.R.A.F. Repair Scheme (Vol. 3 Sect. 2 Sub Sect. C 9) to be implemented only as and when defective drain pipes are discovered.

5. It is to be noted that certain R.R.A.F. FB.9 Vampires had the S.T.I. satisfied by the manufacturer before its cancellation became effective According to Log Card entries these aircraft are namely:-

RRAF 100 - 101 - 102 - 103 - 104 - 105 - 109 - 110 - 112 - 113 - 114 - and 115.

6. It is emphasised that the above named aircraft, and any other aircraft found to have the drain pipe blanked off under authority of STI/Vamp/76A are to remain in that condition so long as the existing fuel tank remains fitted.

N.B. "On no account are attempts to be made to remove blanking plugs and reinstate drain pipe connections."

Sources:
A.M./STI/Vamp/76A.
A.M./Postagram A.96785/51/Air Eng. 1 (B) dated 22nd October, 1953.

(B.H. GIBBONS)
Wing Commander
S.T.S.O.
H.Q. R.R.A.F.

Distribution.

O.C. M.U.	(1)	O.C. Equip. Depot	(2)
Tech. Control M.U.	(1)	S.E.S.O.	(1)
A.R.S.	(3)	Tech. Stats	(2)
No. 1 Squadron	(3)		
No. 2 "	(3)		
Component Section	(2)		

R.R.A.F. Technical Order.

Vol. 7, Sect. 2, Sub.Sect. D26 (Issue 1)
Vol. 3, Sect. 2, Sub. Sect. D55 (Issue 1)
Vol. 5, Sect. 10, Leaflet No. 2.

Superseding & Cancelling Technical Order

Vol. 3, Sect. 2, Sub. Sect. D37 (Issue 1)
and Amendments No's 125 and 129.

Air Headquarters,
Royal Rhodesian Air Force,
NEW SARUM.

29th November, 1956.

A. Special Technical Instruction/RRAF/Electrical/3
IRREGULAR RELEASE OF PRACTICE BOMBS.

B. Vampire FB9 and T.11 aircraft.

C. As a result of loss of aircraft stores and subsequent investigations into the requirements of Air Ministry Special Technical Instruction/Vampire/143 it has been decided that the redundant Cable B12 connected to No. 6 pin of the 7 pin bomb socket port and starboard is to be disconnected and taped back.

At the first opportunity but not later than next PRIMARY STAR SERVICING proceed as follows:-

Disconnect cable B12 from No. 6 pin of the bomb socket clipper Type 7 Pole Mk. 2, Sect. Ref. 5D1374 port and starboard m/p and tape back.

E. Record on the Forms 700E and 4801.

F. NIL.

G. NIL.

SOURCE:- File R.R.A.F./8057/1/[illegible]

(R.H. GIBBONS)
Squadron Leader.
S.T.S.O.

DISTRIBUTION.

C.O.M.U.	(3)
Specialist Officer. M.U.	(3)
Tech. Control M.U.	(3)
A.R.S.	(5
Elec. Section.	(4
Armanent.	(4
No. 1 Squadron.	(5
No. 2 Squadron.	(5
File.	(4
Staff Armament Officer.	(1)

R.R.A.F. Technical Order
Vol. 3 Sect. 2 Sub Sect. D 2h (Issue 1)

Air Headquarters,
Royal Rhodesian Air Force,
New Sarum.

11th October, 1956.

Special Technical Instruction/RRAF/VAIP/7.

A) Rudder Balance Cable - Fouling of Engine Air Intake Ducts.

B) Vampire MK FB9 and MK T11.

C) Cases have been reported of the rudder balance Cable Part No K.00453 fouling the engine air intake ducts where it runs across the rear face of bulk head No 4.

D) At the next engine removal the following action is to be taken:-

(a) Locate the fairlead Part No K.001819A fitted to the bottom rear face on bulk head No 4.

(b) Check the overall length of the fairlead and where found 1.5 ins. from top to bottom, replace with a locally manufactured fairlead of Tufnol Stores Ref. 10/5746 with an overall measurement of 1.65 ins.

(c) The groove for the cable in the new fairlead to be lowered 0.15 ins to give the necessary clearance between the cable and the air intake duct.

(d) Attachment holes in the new fairlead to be drilled to correspond with the existing holes in the bulkhead.

(e) Fit the new fairlead and secure with the existing bolts.

NOTE:

On aircraft where the overall length of the fairlead is found 1.65 in enter STI/RRAF/Vampire/7 in the appropriate form.

E) Record on Form 700 and 4601 as STI/RRAF/VAIP/7 Satisfied.

F) Nil

G) Nil.

Source:- SAAF/VAIP/D160
Dated 24th January, 1956.

(B.H. GIBBONS)
Squadron Leader
S.T.S.O.

Distribution:-

O.C. M.U.	(1)
M.U. Tech. Control	(1)
A.R.S.	(2)
E.R.S.	(2)
No. 1 Squadron	(3)
No 2 "	(3)
O.C. Equip. Depot	(1)
Tech. Stats	(1)
File	(1)

R.R.A.F. Tech Order.

..3, Sect 2, Sub Sect D 52 (Issue 1).

Air Headquarters.
Royal Rhodesian Air Force,
NEW SARUM.

24th July, 1956.

A). Special Servicing Instruction/RRAF/VAMP/6.

Fireguard Lower Half - Union Drain

B). Vampire all Marks & Goblin all Marks.

C). (1) The purpose of this Technical order is to warn all servicing personnel that the Fireguard Lower Half rear union drain, as introduced by Goblin Modification 903 is a left hand thread.

Within 7 days of receipt of this Technical Order to preclude inadvertent damage to this drain or Fireguard Lower Half Assembly the following notice is to be stencilled in ½" Red letters on the airframe rear cone in a position adjacent to the drain union and clearly visible to servicing personnel.

"FIREGUARD REAR DRAIN UNION - L.H. THREAD"

Record on the appropriate Forms.

F). NIL.

G). NIL.

B.H. GIBBONS
Squadron Leader.
S.T.S.O.

DISTRIBUTION:- SAAF/VAMP/88A.

O.C. M.U.	(1)
ARS	(2)
E.R.S.	(3)
No.1 Squadron	(3)
No.2. "	(3)
M.U. Tech Central	(2)
Tech Stats	(1)

R.R.A.F. Technical Order
Vol.3. Sect.2. Sub.Sect. D.51
Vol.6. Sect.5. Sub.Sect. D.1

Air Headquarters,
Royal Rhodesian Air Force,
NEW SARUM.

13th July, 1956.

(A) Special Technical Instruction/Vampire/154 (Class D)
(Cancelling S.I./Vampire/54).
Pacitor Fuel Contents System : Loss of Capacitance and Ingress of Water

Note:- S.I./Vampire/54 has never been issued as a R.R.A.F. Technical Order.

(B) Vampire, Marks 9, T.11.

(C) Cases have been reported of incorrect gauge reading due to the:-

(a) Weakening of the spring grip of Plugs (10H/3930) attached to sockets (10H/3931) on the Rectifier Unit G.P.642/001 in the cannon bay leading to loosening or disconnection due to Aircraft vibration.

(b) Ingress of water through the tank connector at the cable gland entry.

(D)1. Within three months of receipt of this Instruction proceed as follows:-

(a) Make a seal using Hermatite Ref. 34B/524 with a tank material gasket normal thickness 0.026 inch. After drying out all components the seal should be placed between the circular face of Part No. G.P.712 Cable end and the circular face of the Tank Unit Head. A.P.1275 A. Vol.1, Section 3, Chap. 17, Fig. 16 shows the circular face of the cable end, Part No. G.P. 712 at the lowest of the five Cable Assemblies.

(b) Unscrew both gland entry nuts, using Boscoprene No. 2113 Sect Ref 33C 1281, so alth gla nd and ca ble and replace the nuts.

(c) Using 20 gauge tinned copper wire 2½ inches long, wind the wire round the indented ring in the spring grip of Plug (10H/3930) and twist the two free ends with pliers until a firm grip is made.

(d) The insulation resistances of the Cable Assemblies and Tank Unit measured from each co-axial cable, where it has been disconnected from the Rectifier Unit, should be not less than 5 Meg. Ohms, using a 250 volt Megger.

Estimated man hours 6.

(E) Record on the Form 700 and 4801.

(F) Nil.

(G) 1. Nil.

(B.H. GIBBONS)
Squadron Leader
S.T.S.O.

SOURCE:- Postagram A243631/56/AIR ENG.4(B)

Distribution:-

O.C./M.U.	(1)	A.R.S.	(2)
No.1 Squadron	(3)	No.2 Squadron	(3)
Instrument Section	(3)	O.C. Equipment Depot	(2)
S.E.S.O.	(1)	O.C. G.T.S.	(1)
Tech. Stats.	(1)		

R.R.A.F. Technical Order
Vol. 3. Sect.2. Sub.Sect. D49 (Issue 1)

Air Headquarters,
Royal Rhodesian Air Force,
P. O. Box 8131, Causeway,
SOUTHERN RHODESIA.

8th May 1956.

Special Technical Instruction/Vampire/148B
(Amending S.T.I./Vamp/148 - 148A).

Rudder Top Hinge Bracket Attachment to Fin Spar: Cracking of Plates.

NOTE: Cancel Prelim. Warning/Vampire/II (Vol. 3-2-F.1.) and Special Technical Instruction/R.R.A.F./Vampire 2 (Vol. 3-2-D40) quoting this Order as authority.

(A) Vampire T.11.

(B) Cases have been reported of cracking of the weld joints on the steel nut plates on Rib No.5 forward of the fin rear spar, which has led to cracking of the fin spar web in-way of the rudder top hinge bracket attachment. This Instruction calls for a check to be made in the area affected, and authorises and details necessary repair.

(D) Class C - within the next 28 days after aircraft has completed its first 50 hours flying life, proceed as follows:-

1. Remove the Port and Starboard rudders as per A.P.4099J, Vol.1, Sect.3, Chap. 3. Remove also the pitot heater lead terminal block from the top of Port Fin Rib 6.

2. Re-insert the horizontal rudder top attachment bolt to the top rudder to fin attachment bracket, Part No. J00825 (Ref. only.) With the aid of a screwdriver or suitable lever, lightly load the top hinge bracket and at the same time visually check the 4 welded steel nut plates situated in the angles formed by the forward face of the fin spar and the top and bottom surfaces of Fin Rib No. 5.

NOTE:- The nut plates are to be inspected for cracks at the welds which may only become apparent during the loading of the hinge bracket as stated above, they can be viewed as follows:-

(a) Top Nut Plates These can be clearly seen looking down on the fin through the tooling holes in the Starboard Fin Rib 6, and on the Port Fin through the pitot head heater terminal lead block (removed in operation 1) aperture.

(b) Bottom Nut Plates
Refer to Drawing R.15.TF.101, locate the 2 rivets forward and below the bottom nut plate (as would be drilled if the repair was being carried out). Drill two 1/8 in. dia. holes at these positions on both sides of the fin. The nut plates can then be seen by using a "P" lamp at one hole and applying the eye closely to the other hole. If no cracks are found fill the newly drilled holes with Chobert Aluminium Alloy L.69 Countersunk 1/8 in. dia. x 1/3 in. Rivets Part No. AGS 2046/404 (Stores Ref. 280/6876). Plug Chobert rivets with filler and apply protective finish.

3. Inspect the fin spar rear face for cracks at the rudder top hinge Bracket attachment.

4. (a) Where cracks are detected in para (D)2 inspection, Repair Scheme R.15.TF.101 (R.R.A.F. Drawing Copy AV-29) attached is to be applied to both fins.

(b) Where cracks are found in the fin spar, per para (D)3 inspection a replacement boom will be required.

(c) The repair items required under the repair scheme, which will comprise The Box Bracket and Doubling Plates, are being provided for and will be demanded from Equipment Depot under Reference 26DV/11830; demands are to be annotated "For S.T.I./Vampire/14

5. Replace all removed items in accordance with the authorised procedure.

6. Man hours involved:- Inspection 4 hours - Repair 16 hours.

(E) Record on Forms 700 and 4801.

(F) Defects are to be reported to Tech. Stats. A.H.Q. quoting serial number of aircraft, the hours flown and the precise nature of defect.

(G) Modification Vampire 3508 has been initiated to obviate defect.

(B.H. GIBBONS) SQN. LDR.
S.T.S.O.

Distribution:

C.O./M.U.	1 copy	O.C. Equip. Depot	1 copy
A.R.S.	2 copies	O.C. Training School	1 "
Components Section	2 "	Tech. St ts T.O. Vol.	1 "
No.1 Squadron	3 "		
No.2 Squadron	3 "		
S.R.S.O./A.H.Q.	1 copy		

Air Headquarters,
Royal Rhodesian Air Force.

23rd March, 1957.

R.R.A.F. Technical Order
Vol. 3, Sect. 2, Sub Sect. D 49 (Issue 2)
(Superseding Issue 1, dated 8th May, 1956)

N.B. "Issue 1 Order & R.R.A.F. Drawing A.V.- 29 attached, are to be retained in T.O. Volumes for use in conjunction with this Issue 2 Order."

3508

A) Special Technical Instruction/Vampire/148B (Issue 2)
Rudder Top Hinge Bracket Attachment to Fin Spar: Cracking of Plates

B) Vampire T 11

C) 1. Cases have been reported of cracking of the weld joints on the steel nut plates on Rib 5 forward of the fin rear spar, which has led to cracking of the fin spar web in-way of the rudder top hinge bracket attachments.

2. This instruction (Issue 2) authorises the embodiment of The Repair Scheme R.15.TF.101 (RRAF Drawing AV - 29) designed to strengthen the affected areas; it is to be applied to both fins regardless of whether or not cracks at the nut plate welds were detected in accordance with Issue 1 Order, Para D (2) Inspection.

3. Box Brackets and Doubling Plates are now available in Equipment Depot and are to be demanded as follows:-

Sect. Ref.	Nomenclature	Qty.
26FC/11830	Box Bracket & Doubling Plates	1 Set

Rivets will be demanded as required, in accordance with Drg. R15.TF.101 (AV - 29).

D) 1. Within the next 28 days carry out the repair scheme in accordance with Drawing R15.TF.101 (RRAF AV - 29).

2. Also inspect the fin spar rear face for cracks at the rudder top hinge bracket attachment. Where cracks are found in the fin spar, a replacement boom will be required.

3. Replace all items removed in accordance with current authorised procedure.

4. Man Hours - approx. 16 hours.

E) 1. Record on Forms 700 and 4801 as "STI/Vamp/148B - Iss 2."

2. This is necessary as the suffix "Issue 2" will signify that the repair scheme has been carried out, and that in consequence the aircraft is cleared for Spinning.

3. Retrospective recording action as "STI/Vamp/148B - Iss 2" is required in respect of RRAF 121 which has already had the repair scheme satisfied, under recording action STI/Vamp/148B.

4. Retain Issue 1 Order and Drg. AV - 29 in T.O. Volumes for use in conjunction with this Issue 2 Order.

F) Defect as per para (d) 2 above, i.e. fin spar, are to be reported to Tech. Stats., quoting aircraft serial number, hours flown, etc.

..... 2.

G) 1. Modification Vampire 3508 has been initiated to obviate defect.

2. Until such time as further detailed information is available concerning Mod. Vamp. 3508, the satisfaction of this repair scheme will be taken as satisfying the conditions of Mod. Vamp. 3508 for the R.R.A.F.

Compiled: J.A.W.
Typed: B.W.L.
Source: A.M./STI/Vamp/148B
Tech. Stats/A.H.Q.

(B.H. GIBBONS)
Wing Commander
S.T.S.O.
A.H.Q. R.R.A.F.

Distribution:

O.C. M.U.	(1)
Tech. Control M.U.	(1)
A.R.S.	(3)
Components Section	(3)
No. 1 Squadron	(3)
No. 2 "	(3)
O.C. Equipt. Depot	(2)
S.E.S.O.	(1)
Tech. Stats.	(1)

Air Headquarters,
Royal Rhodesian Air Force,
New Salisbury Airport,
P. O. Box 8131, Causeway,
SOUTHERN RHODESIA.

26th April, 1956.

NOTE: This S.T.I. is issued in accordance with A.P.3158 Volume 2, Section G, Leaflet No.2 for information, guidance and necessary action.

(A) Special Technical Instruction/Vampire/152
Engine Air Intake Ducts - Defective Spot Welding

(B) Vampire, Mk. 5 (post Mod. Vampire 880) 9, 10 and 11 Aircraft and Inner Air Intake Ducts, Pt. Nos. D001996A/2 (26FC/4738) and D001997A/2, (26FC/4876) held as Spare or in Stock.

(C) Cases have occurred where faulty spot welds have allowed the inner air intake duct, Part Nos. D001996A/2 (Stbd.), D001997A/2 (Port), skins to part from the reinforcing plate, Part Nos. D007480.N.D. (Stbd), D007479.N.D. (Port).

(D)1. Class D. Within 3 months of receipt of this Instruction or at next engine removal whichever is the earlier proceed as follows:-

(a) Remove and inspect the Port and Starboard Inner Air Ducts for the fault quoted in Para. C.

(b) Where spot welds show signs of parting the instructions quoted on Repair Instruction Sheet No. 138 are applicable; R.R.A.F. Tech. Order Vol.3 Sect.2 Sub.Sect.C6 refers.

Estimated Man-hours

Inspection, both ducts	= 1/4
Removal and re-fitment of both ducts from aircraft	= 2
Repair if required, both ducts	= 2

2. All Inner Air Intake Ducts, Pt. Nos. D001996A/2 and D001997A/2 held as Spare or in Stock are to be rectified in accordance with this Instruction before issue.

(E) Record on forms 700 and 4801.

(F) Nil.

(G) Steps are being taken to ensure future production is satisfactory.

NOTE: Make the following handwritten amendment to R.R.A.F. Tech. Order Vol.2 Sect.2 Sub.Sect.C6 (Issue 1) quoting this Order as authority:- Directly underneath volume reference heading Vol.3 Sect.2 Sub.Sect.C6 (Issue 1) insert:-

"NOTE:
Implementation of this Instruction is now authorised by, and is to be recorded as, S.T.I./Vamp./152; Tech. Order Vol.3 Sect.2 Sub. Sect. D47 refers."

(B.H. GIBBONS) SQN. LDR.
S.T.S.O.

2/.....

Headquarters,
Royal Rhodesian Air Force,
New Salisbury Airport,
P.O. Box 8131, Causeway,
SOUTHERN RHODESIA.

18th April 1956.

NOTE: This Order supersedes and cancels Tech. Order Vol. 3/2/E37 and Vol. 3/2/D45 Issue I.

A) Special Technical Instruction R.R.A.F./Vampire/4
Chafing of Brake Pipelines in U/C Bays

B) Vampire aircraft - [illegible] marks.

C) Cases have occurred [illegible] flexible brake hose assemblies (Ref. [illegible]) P/No. [illegible] (2 ft) chafing the metal brake pipe [illegible] Nos. Q.002437 [illegible] and Q.002455 A/ND, where they are [illegible] over each other [illegible] also against the compression leg pick-up bracket.

D) 1. As soon as possible and not later than the next Minor Servicing proceed as follows:

a) Inspect the brake pipelines P/Nos. Q.002437 A/ND (Stores Ref. 26FC/4851) [illegible] Q.002455 A/ND (Stores Ref. 26FC/4658) for signs of chafing at the points of intersection by the flexible hose assemblies (Ref. 26B1/4608).

b) Inspect flexible hose assemblies (Ref. 26B1/4608) for signs of chafing on Bracket for compression leg pick-up (Ref. 26FC/3465), which is mounted on the rear undercarriage diaphragm between ribs 2 and 3.

2. Where NO signs of chafing as per para (D) 1 (a) are evident, the metal pipelines are to be covered with Tubing Synthetic Flexible (Ref. 5F/2035) over a length of three inches either side of the point touched by the flexible hose assembly, with the undercarriage in the down position. The synthetic tubing is to be split lengthwise and secured with braided stringing cord Ref. 32A/94.

3. Where NO chafing is evident as per para (D) 1 (b), but the possibility of chafing may exist due to the proximity of the flexible hoses to the brackets, the flexible hose assemblies are to be covered with Tubing Synthetic Flexible over a length of three inches either side of the estimated point of contact using the same method as per para. (D) 2.

4. Where any pipeline is found to be chafed it is to be removed and replaced by a serviceable pipeline which is then to be treated in accordance with para (D) 2 and 3 as applicable.

E) Record on Forms 700 and 4801 as "STI/R.R.A.F./VAMP/4"
F) Report defective items to Tech. Stats. A.H.Q.
G Nil.

Sources:
(S.A.A.F. Part A Vamp. E67
" " A " D.153
(Modified by T.O. No. 2 Squadron.

(B.H.GIBBONS)
Squadron Leader
S.T.S.O.

Distribution:-

O.C./M.U.	1 Copy	O.C. Equipment Depot	1 Copy
A.R.S.	2 "	Tech. Stats. T.O. Vol.	1 "
No. 1 Squadron	3 "	O.C. Training School	1 "
No. 2 Squadron	3 "		
S.T.S.O./A.H.Q.	1 "		

R.R.A.F. Technical Order
Vol. 3 Sect. 2 Sub Sect. D44 (Issue I)

Headquarters,
Royal Rhodesian Air Force
New Salisbury Airport,
P.O. Box 8131, Causeway,
SOUTHERN RHODESIA.

17th February, 1956.

A) Special Technical Instruction/R.R.A.F./Vampire/3
Arm on Elevator Bias Weight Fouling Instrument Panel.

B) Vampire Mk. ~~T.11~~ F.B.9. Aircraft. Amendment 132. Dated 21.2.56.

C) Cases have been reported of the arm, on the elevator bias weight (P.No. K.00925A), fouling where it passes through the lower left instrument panel.

D) Not later than the next Primary Servicing examine for signs of fouling as per para. (c). If fouling is evident, the instrument panel is to be filed to provide a clearance of 1/16 in. between the panel and the arm.

E) Record on Forms 700 & 4301 as "S.T.I./R.R.A.F./VAMP/3" satisfied. Also record on Form 700 whether foul evident or not, and action taken.

F) Nil.

G) Nil.

(B.H.GIBBONS)
Squadron Leader
S.T.S.O.

Source:

S.A.A.F., Part A, Vampire D.162)
S.T.I./S.A.A.F./Vamp/31)

Distribution:

O.C./M.U.	2	Copies
A.R.S.	2	"
No. 1 Squadron	3	"
No. 2 Squadron	3	"

For Information:-

Specialist Officer/M.U.	1	Copy
Instrument Section	1	"
O.C. Training School	1	"
Tech. Stats Files	1	"

R.R.A.F., Technical Orders

Vol. 3 Sect. 2 Sub Sect. D 43 (Issue I)
Vol. 7 Sect. 1 Sub Sect. D 5 (Issue I)

Headquarters,
Royal Rhodesian Air Force,
New Salisbury Airport,
P.O. Box 8131, Causeway,
SOUTHERN RHODESIA.

16th December, 1955.

NOTE:- This order supersedes and is The authority for cancelling R.R.A.F., Tech. Order Vol. 7 Sect. 1 Sub Sect. A 16 - issued as advance information.

A) Special Technical Instruction/Vampire/146
Blast Tube Cover Plate - Fouling Electric Cables.

B) Vampire Mk. T.II

C) Cases have been reported of the fouling and chafing of electric cables due to incorrect positioning of the gun blast tube cover plate, Ref. No. 26FC/6362.

D) Not later than the next Primary Star Servicing examine the electrical cables on the starboard side of the lower nose decking for evidence of chafing, and position the gun blast cover plate so that the channel is in the horizontal plane when the gun blast fairing is in position. Renew cables as necessary.

E) Record on Forms 700 and 4801 as "S.T.I./VAMP/146" and file one copy of this Order in each Volume of Tech Orders as applicable.

F) NIL

G) NIL

(B.H.GIBBONS)
Squadron Leader
S.T.S.O.

Distribution:-

S.T.O.	2 copies
Deputy S.T.O.	2 "
A.R.S.	2 "
A.S.F.	2 "
E.R.S.	2 "
Vampire Squadron	2 "
Electrical Section	2 "

For Information:-

O.C. Flying	2 Copies
O.C. Training School	2 "
Tech. Control	2 "
Provost Squadron	2 "
Transport Squadron	2 "
RRAF/T.O. File	2 "

Air Headquarters,
Royal Rhodesian Air Force,
NEW SARUM.

15th January, 1957.

R.R.A.F. Technical Order.
Vol. 3 Sect. 2 Sub-Sect. D42 (Issue 2)
Vol. 7 Sect. 1 Sub-Sect. D 4 (Issue 2)
(Superseding and cancelling Issue 1 of the above Orders dated 13th December, 1955 and Amendment No's 122 and 138.)

N.B. Retain Drawing Number R.O.O.N. 13, incorporated on Page 2 of Issue 1 of above Orders.

(A) Special Technical Instruction/Vampire/144C
(Amending and incorporating S.T.I./Vampire/144, 144A & 144B)
Fire Detection System - Incorrect Warning.

(B) Vampire aircraft embodying Mod. 844 or 3245 and with Goblin 2 Engines (Post Mod. 302) or with Goblin 3 Engines installed.

(C) Cases have been reported of the incorrect operation of the fire warning light during flight, due to the resetting type Fire Detectors being too close to the combustion chamber casings.

Embodiment of Goblin Mod. 302 (Goblin 2 Engines only) has made these switches redundant. For Goblin Mk. 3 Engines, Modification Goblin 302 is incorporated in the basic design.

(D) 1. At the first convenient opportunity and not later than the next MINOR Servicing proceed as follows:-

(a) Disconnect all split-can resetting type fire detectors and take the following action to by-pass these detectors with electrical wiring, to ensure that the remaining fire detectors are operative.

(b) It will be necessary to link the bottom flame switches situated on the Port and Starboard engine bearers to the flame switches at the rear of Rib No. 1 on the inboard face.

(c) Refer to Drawing No. R.O.O.N. 13 issued with S.T.I./Vampire/144 and carry out the following work:-
Two Unifire Red 7 cables (Stores Ref: 5E/3724) will be required at the Port and Starboard side and coded F.A. 2+ and F.A. 3. The new cable need not be run inside the existing asbestos tape, and can be secured above the existing run of cables along the rib.

(d) On some marks of aircraft it will be noted that the wiring from the split-can detectors is terminated at Terminal Blocks on the engine bearers. In other cases the termination is at the Fire Detectors on the engine bearers.

(e) When the alteration has been embodied carry out the standard insulation and functional tests, as laid down for this system.

Estimated Manhours - Under Five.

(E) Record on Forms 700 & 4801 as "S.T.I./VAMP/144C", and file one copy of this Order in each relevant T.O. Volume as indicated.

(F) Nil.

(G) Vampire Mod. 3475 when embodied will render compliance with this S.T.I. unnecessary, and will supersede Vampire Mod. 844 (in part) and Vampire Mod. 3245.

Source: A.M./S.T.I.

Distribution:

O.C./M.U.	(2)		
Tech/Control/M.U.	(2)	No.2 Squadron	(5)
Spec. Officer/M.U.	(2)	Air 1(Info)	(2)
A.R.S.	(3)	S.E.S.O./AHQ	(2)
E.R.S. (Info)	(2)	Tech. Staff.	(2)
Misc. Sect.	(5)		
O.C. Equipt. Depot	(3)		
No. 1 Squadron	(5)		

(S.H. GIBBONS)
Squadron Leader,
S.T.S.O.

Air Headquarters
Royal Rhodesian Air Force.

9th September, 1957.

R.R.A.F. Technical Order.
Volume 16 - Amendments.
Amendment No. 232.

Amending:-
Vol.3, Sect.2, Sub-Sect. D42 (Issue 2)
Vol.7, Sect.1, Sub-Sect. D 4 (Issue 2)
Date 15th January, 1957.

Special Technical Instruction/Vampire/144C

Action:-

(1) As a result of stocks of Unifire Red Cable (Red. 5E/3724) ordered primarily to meet requirements of this particular S.T.I. becoming exhausted, implementation of the S.T.I. on unsatisfied aircraft is to be held in obeyance pending availability of further supplies of cable; provisioning action has been implemented.

(2) P.S.C.O. are to notify Tech. Stats. immediately on receipt of fresh stocks of cable in order that this Amendment may be cancelled.

(3) Attach one copy of this Amendment to each copy of the above Orders as the authority for temporary suspension of action.

Source: Tech.Stats. 75CL/2/Rn.

(B.H. GIBBONS)
Wing Commander
S.T.S.O.
Air Headquarters. R.R.A.F.

Distribution.

Two copies per Essential Recipients plus the following:-

S.E.S.O./A.H.Q.	(2)
O.C. Equipment Depot.	(2)
Specialist Officer.	(2)
W.O. Electrical Section.	(3)
W.O. No. 1 Squadron.	(3)
W.O. No. 2 Squadron.	(3)

R.R.A.F. Technical Order

Vol 3 Sect. 2 Sub Sect.D41(Issue I)

Headquarters,
Royal Rhodesian Air Force,
New Salisbury Airport,
P.O. Box 8131, Causeway,
SOUTHERN RHODESIA.

15th December, 1955.

A) Special Technical Instruction/Vampire/147
Chafing of Oxygen Pipe by Elevator Trim Tab Control Chain

NOTE:-

Cancel R.R.A.F. Tech. Order Vol. 6 Sect. 9 Sub Sect. A7, quoting this order as authority.

B) Vampire T.11 aircraft with modification No. 3167 embodied, i.e. all R.R.A.F. T.11 a/c.

C) The elevator trim tab control chain from the second pilot's control to the cross shaft on Bulkhead No. 2 passes over and adjacent to the Oxygen Pipe. Pt. No. 15-S.711N.D., connecting to the Starboard regulator. Cases have been found where the chain has chafed the pipe.

D) At the next Primary Star Servicing check for a similar fault and ensure that there is ample clearance between the pipe and chain even when the control is operated. Where more clearance is desired, slightly and carefully re-set the oxygen pipe concerned to suit.

NOTE:-

The pipe and chain can be clearly seen by looking downwards between the first and second Pilot's seat.

E) Record on Forms 700 and 4801 as "S.T.I./Vampire/147" satisfied.

F) Nil.

G) Nil.

(B.H.GIBBONS) SQN. LDR.
S.T.S.O.

Distribution:-			For Information:-		
S.T.O.	1	Copy	O.C. Equipment Depot	1	Copy
Deputy S.T.O.	1	"	O.C. Flying	1	"
A.R.S.	2	"	O.C. Training School	1	"
A.S.F.	2	"	Technical Control	1	"
E.R.S.	2	"	File	1	"
Provost Squadron	2	"			
Vampire "	2	"			
Transport "	2	"			

.A.F. Technical Order
. 3 Sect. 2 Sub Sect. D 39

Headquarters,
Royal Rhodesian Air Force,
New Salisbury Airport,
P.O. Box 8131, Causeway,
SOUTHERN RHODESIA.

21st November, 1955.

Special Technical Instruction/R.R.A.F./Vampire 1. Lever on Elevator Torque Shaft Pt No 15CF9A - Chafing

Vampire Mk T 11.

A case has been reported of the lever on Elevator Torque Shaft Pt. No. 15CF9A chafing the underside of the Beam Support False Floor Rear L. H. Pt. No. 15F707A, when the floor is depressed by the occupant. The object of this instruction is to increase the clearance between top of the lever and the underside of the beam, to prevent chafing.

At the earliest convenient opportunity and not later than next Intermediate servicing, proceed as follows:-

1. Remove left hand seat.

2. Remove the Panel False Floor Rear L. H. Pt. No. 15F 715 A.

3. Examine the lever for evidence of chafing.

4. Refer to attached sketch. Manufacture the packing block, and apply anti-corrosive treatment before fitting.

5. Remove and discard the two 2 B.A. bolts securing the beam to the bracket. Retain the two washers. Insert the packing block between the beam and bracket. Secure with two 2 B.A. high tensile steel bolts Ref 28D/12506, using existing washers under the bolt heads.

6. Check to ensure that there is ample clearance between the top of the lever and underside of the beam.

7. Replace the Panel False Floor Rear L.H.

8. Replace seat.

) Record on Form 700 & 4801 as STI/RAF/VAMP/1

) Nil

) Nil

URCE: 3 Group (C.T.I.)

TE: 28th October, 1955

(R.M.PARRY) F/O.
A/STSO.
ROYAL RHODESIAN AIR FORCE.

STRIBUTION

.T.O.	1 Copy
eputy S.T.O.	1 "
.R.S.	2 "
.S.F.	2 "
.E.S.	2 "
rovost Flight	2 "
ampire Squadron	2 "
ransport Squadron	2 "
G. Equipment Depot	2 "

For Information

O.C. Flying	1 Copy
O.C. Training School	1 "
Tech. Control	1 "
File	1 "

APPENDIX TO:-

R.R.A.F. TECHNICAL ORDER
VOL.3 SECT.2 SUB.SECT.D39
(S.T.I./RRAF/VAMPIRE/1)

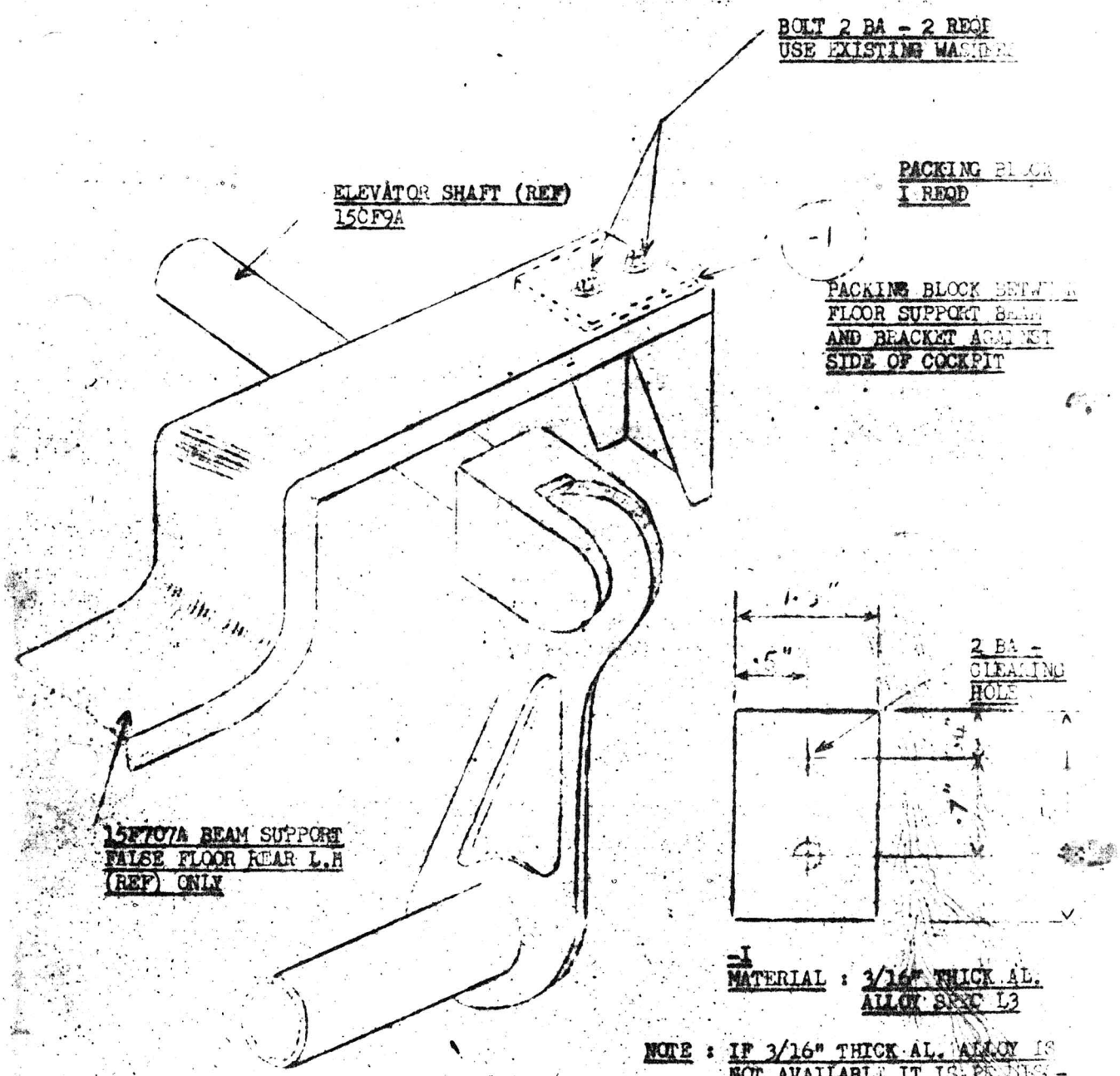

-1
MATERIAL : 3/16" THICK AL. ALLOY SPEC L3

NOTE : IF 3/16" THICK AL. ALLOY IS NOT AVAILABLE IT IS PERMISSIBLE TO USE THINNER GAUGES TO MAKE UP THE REQUIRED THICKNESS

Air Headquarters,
Royal Rhodesian Air Force.

20th June, 1957

R.R.A.F. Technical Order
Vol. 3, Sect. 2, Sub Sect. D32 (Issue 2)
Cancelling and Superseding:-
Vol. 3, Sect. 2, Sub Sect. D32
Dated 20th April, 1955.

A) Special Technical Instruction/Vampire/136A
Fouling of the Flap Jacks

B) Vampires Marks 9 and 11

C) Fouling may occur between Flap Jack Part No. Air.4008 (Sect. 27M/455) and Flap shroud stiffeners Part No. D001845 (Port) (Sect. 26FC/371) and D001846 (Starboard) (Sect. 26FC/544) resulting in chafing of the Flap Jack Body.

D) At next Primary servicing examine Flap Jack Body for signs of chafing. Where chafing has occurred proceed as follows:-

(1) File Stiffener to obtain clearance, ensuring that a minimum flange height of one eigth inch is retained. Measurement is to be taken on outside of Stiffener :

(2) a) Examine for signs of wear of Linatex sealing on trailing edge of flap shrouds and replace as necessary using Bostock 1261, (33C/1149).

b) Where complete renewal of the strip becomes necessary the latest Neoprene sealing strip (Shore Hardness 40° - 50°) Stores Ref. 32C/645 should be used, as this type has been found to be more resistant to attack by fuel.

(3) Where chafing has scored Jack body to a depth greater than 0.020 (twenty-thousands) inch, replacement Jack is to be fitted and damaged Jack disposed of according to current procedure.

(4) Where chafing has scored Jack body to a depth of 0.020 inch or less, the Jack may be considered serviceable provided scoring is filed out, using smooth file and taking care not to reduce wall thickness of Jack Body any further.

(5) Paint 'Keep-Off' in 3" Red lettering on the upper surface of the flap shroud.

E) Record on APPROPRIATE FORMS.

F) Report all cases found under para D 3 above to Tech. Stats. A.H.Q.

G) Nil

Source: D.H. T.N.S. V552
Dated 17/1/57

Distribution:
One copy to Essential Recipients
(per Vol. 1 No. 2 Issue 2 Para 5)
plus following additional copies:

A.E.S.	(1)
No. 1 Squadron	(2)
No. 2 "	(2)
Components Section	(1)

(H.J. PRINGLE)
Flight Lieutenant
For S.T.S.O.
A.H.Q. R.R.A.F.

R.R.A.F. Technical Order
Vol 3, Sect 2, Sub-Sect D30 (Issue 2)
Cancelling and superseding
Vol 3, Sect 2, Sub-Sect D30 (Issue 1)

Air Headquarters,
Royal Rhodesian Air Force,
P.O. Box 8131, Causeway,
SOUTHERN RHODESIA.

28th, September 1956.

A. Special Technical Instruction/Vampire/134A
Hydraulic Pipes: Corrosion.

B. Vampire Mk. FB9 and T. II.

C. Cases have been reported of the loss of hydraulic pressure, to the undercarriage through a leak from a hydraulic pipe in No. 1 wing fuel tank bay. The hole in the pipe was caused by corrosion due to poor enamelling of the pipes which in these cases were of DTD 503 material.

D. At the next removal of No. 1 wing fuel tank or engine removal whichever is the earlier and not later than the next Minor servicing proceed as follows:-

1. Examine the hydraulic pipes and if found to be manufactured in steel make a thorough inspection for signs of corrosion.

2. Pay particular attention to that portion of the pipes beneath the securing clamp blocks as these areas are considered most vulnerable to this damage. Renew any corroded pipes.

3. Where pipes are renewed the system should be tested and functioned as laid down in the relevant Air Publication.

4. If there is any reason to suspect a hydraulic leak in this area prior to the Minor Servicing this instruction should be actioned immediately.

E. Record on appropriate form.

F. NIL. All instances of corroded pipes are to be reported on R.R.A.F. Form/Stats/125.

G. NIL. On present production these pipes are manufactured in DTD 323A which is tungur.

(B.H. GIBBONS) S.DN. LDR.
S.T.S.O.

Authority: Summary of Defects No. 1636.

Distribution:

OC/MU	(1)
A.R.S.	(2)
MU Tech. Control	(1)
No. 1 Sqdn.	(3)
No. 2 Sqdn.	(3)
Tech Stats.	(1)
File.	(1)

Air Headquarters,
Southern Rhodesia Air Force,
New Salisbury Airport.

30th September, 1954.

Vol 3 Sect 2 Sub-Sect. D 29.

(A) Special Technical Instruction/Vampire/130
20 m/m Cannon Installation: Cannon Rear Mounting Brackets: Looseness and Fracture.

(B) Vampire Marks, 3,5,9,10,11

(C) Cases have been reported of fractured cannon rear mounting brackets, part numbers S.00622A, S.00621A, S.0065A, S.0066A, S.0067A, S.0068A. Stores Ref. 26FC, 2708, 2707, 1740, 1741, 1742, 1743 respectively. The fracturing is attributed to the looseness of the brackets due to the attachment bolts being threadbound.

(D) 1. Before the cannon is next fired and not later than the next Primary Servicing, Check the brackets quoted, for fractures and security.

2. Replace fractured brackets. Where brackets are found loose, check attachment bolts for bottoming of threads and fit an additional washer as required.

NOTE - The bracket attachments are as follows:-

Bolt (28D/13725) Pt.No.A.2616E (A15216E obsolete) with Stiff Nut (28M/10299/Pt.No.EA2 for preference; one washer (28W/12440) Pt.No.SP19/E (AGS.947D obsolete), and 2 shrinkage washers (Ref. No. not available) Pt.No. De Havilland Standard D.H.S.187/2. fitted at the four rear attachments of outboard port and starboard cannon rear mounting brackets. These bolts are accessible in the tank bay through a cutaway at the rear face of Bulkhead 3.

Countersunk Headed Bolt (28D/12657) Pt.No.AS.2920/6E with nut (28M/13271) Pt.No. A.24/EP (A16ZEP obsolete) and washer (26FC/2830) Pt.No.S.0026 is fitted at the four front attachments of the outboard port and starboard rear mounting brackets, and the two front attachments of the port and starboard inboard cannons outer brackets. These bolts are accessible through the ammunition bay.

Bolt (28D/13007) Pt.No.A.2615E (A15215E obsolete) is fitted at the four attachments of the inner brackets of the port and starboard cannons, and the two rear attachments of the outer brackets of both inboard cannons rear mountings. This bolt is secured in all cases by anchor nuts secured to the cannon floor. Ground steel pins 3/16" diameter, (26BY/5821) Pt.No. DMR/91/139, are fitted through all brackets except the outer brackets of the outboard cannon mountings.

(E) Record on the appropriate form.

(F) Any cases of fractured brackets where bolt attachments are not insecure to be reported to Tech Stats Air Headquarters.

(G) Nil.

(H.H.GIBBONS) MAJOR.
S.T.S.O.

Air Headquarters,
Southern Rhodesia Air Force,
New Salisbury Airport.

14th September, 1954.

Vol. 3 Sect. 2. Sub-Section D28

(A) Special Technical Instruction/Vampire/133
Canopy Winding Handle: Provision of Lanyard

(B) Vampire Mks. 3, 5, 9.

(C) Cases have been reported of the canopy opening in flight, due to the locking pin in the handle coming out of its hole in the micrometer locking plate. The purpose of this instruction is to provide a lanyard to prevent the handle unwinding in flight.

(D) As soon as possible and not later than the next Primary Star Servicing proceed as follows:-

1. Ensure the canopy winding gear is correctly rigged to S.T.I. Vampire 68A.

2. Refer to attached Drawing R.12.FC.101 and make up the lanyard and lug as specified. Fit the lanyard/lug assembly to the existing canopy rail bolt, which is the 8th bolt visible aft of the windscreen member above the canopy seal and cock. The lanyard should be forward of the cockpit light and should not rest on the top.

3. Stencil in red on the port ammunition door situated above the port engine intake - "TO JETTISON CANOPY AND RELEASE PILOT SEE OTHER SIDE".

4. Stencil in red on the starboard ammunition door "TO RELEASE PILOT PULL DOWN CABLE PAINTED RED INSIDE AND LIFT OFF CANOPY"

5. Open starboard ammunition door and paint the following markings in red.

(a) an arrow, pointing inwards, each side of the cut-away portion;

(b) the words "Cable here" above the cut-away;

(c) paint red the exposed section of the canopy jettison cable.

(E) Record on appropriate form.

(F) Nil.

(G) This S.T.I. satisfies Mod. Vam. 3307 which, where embodied will render compliance with this Instruction unnecessary.

(B.H. GIBBONS) Major.
S. T. S. O.

Air Headquarters,
Southern Rhodesia Air Force,
New Salisbury Airport.

6th September, 1954.

Vol 3. Section 2 Sub. Section D 27.

(A) Special Technical Instruction/Vampire/132.
Aileron Attachment Bolt: File Marked.

(B) Vampire T.11 aircraft and T11. Mainplanes held as spare or in store.

(C) Cases have been found of the attachment bolt, Part No.D.00458, (Stores Ref. 26FC/2555) attaching the aileron connecting rod from the differential to the aileron actuating arm, being filed during assemble. This is thought to be due to the operator's attempt to remove excess cadmium deposit. This defect applies to main planes of de Havilland manufacture, and these may be identified by the prefix DHP to the serial number.

(D) As soon as possible not later than the next Primary Star Servicing, and before installation or issue of mainplanes held as spare or in Store, all mainplanes bearing the prefix DHP on the serial plate are to have bolts, Part No.D.00458 (Stores Ref.26FC/2555) removed and examines for signs of filing. Filed bolts should be replaced with new items drawn from stock.

(E) Record on appropriate Forms.

(F) Nil.

(G) Nil. Future production will be free from this defect.

B.H.Gibbons

(B.H.GIBBONS) MAJOR
for E.W.S.JACKLIN,
Commanding,
SOUTHERN RHODESIA AIR FORCE.

Air Headquarters,
Southern Rhodesia Air Force,
NEW SALISBURY AIRPORT.

14 July 1954.

VOLUME 3. Section 2. Sub-section D.26.

(A) Special Technical Instruction/Vampire/131. A.S.I. Pipes: Fouling.

(B) Vampire Marks 3, 5, 9, 10, 11, Sea Vampire Mks. 20, 21 and T.22 embodying Mod. 3217.

(C) Cases have been reported of the A.S.I. pressure and static pipes fouling on the edge of the aperture in the leading edge of the fin through which they pass to the pitot head. The object of this instruction is to increase the size of the aperture in cases where there is insufficient clearance to prevent this foul.

(D) Before the next primary inspection, proceed as follows:

1. Remove the pitot head mounting cover by releasing its clamp bolt and six 4 B.A. countersunk screws and carefully withdraw it over the pitot head.

2. Examine the pipes for damage due to fouling on the edges of the aperture and replace the pipes if so damaged.

3. In such cases or where the clearance is judged to be so little that it may cause a foul the following action is to be taken:

(a) Remove the pitot head and the connections on the ends of the relevant pipes from the fin.

(b) Examine the top two 4 B.A. anchor nuts shown on drawing ROOj.75 and if they are found to be secured as shown in fig.1 they are to be removed and rotated on their existing centre to the positions shown in fig. 2. This is with their straight edge parallel to the fins of the joggle in the fin skin.

(c) Cut the top half of the aperture back to the edge of the top anchor nuts and blend it with the lower half. Radius the edges and apply protective treatment.

(d) Slide on over each pipe approximately two inches of protective sleeving. Sistoflex or any suitable dimensioned rubber tubing may be used. The tubing to be positioned to provide protection for the pipes through the aperture.

(e) Re-assemble the pipe connections and pitot head and test the system as laid down in the relevant publication.

4. Fit the pitot head mounting cover securely.

(E) Record on Form 700 and 1125 as STI/VAMP/131 incorporated.

(F) Nil.

(G) Nil.

(B.H.GIBBONS) MAJOR,
S.T.S.O.

A.R.S. Note Bk
Copy

Air Headquarters,
Southern Rhodesia Air Force,
NEW SALISBURY AIRPORT.

2 July 1954.

VOLUME 3, Section 2, Sub-section D.25

(A) Special Technical Instruction/SAAF/Vampire/20
Cold Air Unit A.C.R.E. Mk. 1A or B - Incorrect Installation in Aircraft.

(B) Vampire aircraft with Mod. 905 embodied.

(C) A case has occurred where the cold air unit was installed in a reversed position in the aircraft. From investigation it is suspected that the installation was incorrect when the unit was originally removed, a suspicion which is strengthened by the condition of the rotor shaft and bearings found when the unit was stripped.

(D) Not later than the next primary star servicing, the cold air units are to be inspected for correct installation. This is most conveniently done by ensuring that the oil supply connection is at the bottom so that the supply pipe forms a U tube from the reservoir. Ensure that the oil connection is fitted to the turbine casing No. 20726 and not the compressor casing No. 20725.

(E) Record on Form 700 or 1125 as STI/SAAF/VAMP/20 satisfied.

(F) Nil.

(G) Nil.

SOURCE: 1 Air Depot and 3 Group (T1)

DATE : 24th May 1954.

B.H. Gibbons

(B.H.GIBBONS) MAJOR,
S.T.S.O.

Air Headquarters,
Southern Rhodesia Air Force,
NEW SALISBURY AIRPORT

3 June 1954.

VOLUME 3, Section 2, Sub-section D.22.

(A) Special Technical Instruction/Vampire/123
Canopy Hatch Jettison Mechanism: Faulty Assembly.

(B) Vampire Mk. T.11 embodying Mod. 3151 and Hatch Jettison Shaft Assemblies held as spare or in store.

(C) Cases have been reported where the centre lever arm, Part No. 15FC 2137, has been incorrectly assembled to the hatch jettison shaft, Part No. 15FC 2185A. The lever is secured to the shaft by a 2BA bolt, Part No. A25 10C, and contains an angled cutaway. If incorrectly fitted the lever will foul the jettison tie rod, Part No. 15 FC 3303A. This will prevent the full movement of the shaft and will not allow the hinges to disengage to effect a satisfactory jettison.

(D) 1. At the first opportunity not later than the next Primary Servicing proceed as follows:

(1) Refer to the attached drawing, Part No. R15 FC 105, and check for the correct assembly of the centre lever arm to the jettison shaft.

(2) Where this assembly is incorrect, the lever is to be removed from the shaft and refitted correctly to the drawing requirements. The correct shaft assemblies on aircraft, the hatch is to be removed in accordance with the relevant A.P. The shaft can then be removed from the Canopy arch and the lever assembled correctly.

(3) Refit all components in accordance with the relevant A.P.

2. Canopy hatch jettison shaft Assemblies, Part No. 15.FC.2185 (Issue 4) held as spare or in Store are to be checked (and rectified where necessary) before installation or issue as applicable.

(E) Record on the form 700 and 1125 as STI/VAMP/43 Vol.3:2:D22 satisfied, and label spare assemblies.

(F) Nil.

(G) Redesign of the lever is contemplated, dispensing with the angled cutaway.

H J Pringle

(H.J.PRINGLE) CAPTAIN,
A/S.T.S.O.

Air Headquarters,
Southern Rhodesia Air Force,
NEW SALISBURY AIRPORT.

3 June 1954.

VOLUME 3, Section 2, Sub-section D 21.

(A) Special Technical Instruction/Vampire/120
Blanking plate, Rib 1, Port Wing: Omission.

(B) Vampire T.11.

(C) It has been discovered that aircraft have been delivered to the Service with a blanking plate omitted from Rib 1 on the port wing. The purpose of this plate is to blank off a redundant hole leading to the tank bay to reduce a possible fire hazard.

(D) At the earliest opportunity and not later than the next Engine Change proceed as follows:

1. Refer to the repair drawing No. R.15 W.101 and manufacture the blanking plate and the bolt attachment plate and apply anti corrosive treatment.

2. Locate the redundant hole on the port wing along the centre line of the rib 1 immediately aft of the air intake. Some holes will be found blanked off with adhesive tape and sprayed silver, giving the impression that the hole is already correctly blanked off, this tape is to be removed.

3. Prior to the assembly of the blanking plate, it is advisable that the bolt attachment plate is secured with a piece of string until one bolt has been secured to the plate. This is to prevent the possibility of the bolt attachment plate dropping inside the tank bay during assembly.

(E) Record on the Form 700 and 1125 as STI/VAMP/120 Vol.3:2:D21 satisfied.

(F) Nil.

(G) Nil. Future production aircraft will have this blanking plate fitted.

(H.J.PRINGLE) CAPTAIN,
A/S.T.S.O.

Air Headquarters,
Southern Rhodesia Air Force,
NEW SALISBURY AIRPORT.

27 May 1954.

VOLUME 3. Section 2. Sub-section D.18.

(A) Nose Wheel/Canopy Hatch Jettison Lines : Fouling STI/VAMP/117.

(B) Vampire Mks. T.11.

(C) During retraction of the nose wheel undercarriage the axle arc terminates as opposite the area shaded on the drawing No. R.15-UN-101 and, therefore, any pipes that are routed over this area are likely to be damaged. The Drawing shows two alternative routes for these pipes both of which are satisfactory. The object of this instruction is to check the pipe routing and correct if necessary.

(D) At, or before, the next Primary Star Servicing proceed as follows:-

1. Refer to the attached drawing No. R.12-UN-101 illustrating the two alternative pipe runs and determine whether any of the pipe lines have been routed over the shaded area.

2. Where the pipe lines are found to be routed over the shaded area, the clamp block is to be re-positioned to position 'A'. The pipe lines can be re-shaped in situ, care being taken not to kink the pipes. To enable fitment of the clamp block, drill off two 3/16" dia. holes to the dimension given on the drawing.

3. In order to gain access for the purpose of securing the clamp block at position 'A' (the location of which is above the floor level) remove the false flooring immediately forward of the second pilot's control column. The two 3/16" dia. holes will be located on the starboard side of the nose wheel housing in line with the second pilot's elevator cross shaft.

4. The attachment bolts securing the clamp block shown by dotted line on the drawing, are located below the floor level, access to which is gained by removing the starboard cannon fairing.

5. Replace fairing and flooring removed to carry out this instruction. Proceed to carry out a canopy hatch jettison check. With the canopy hatch closed and locked, pull the jettison handle and operate the hydraulic hand pump ensuring that the hatch jettison hydraulic jack ram extends to its full amount. On aircraft with the clear vision canopy hatch, introduced by Vampire Mod.3151, during the jettison check external pressure is to be brought to bear on the hatch, in the hinge area, to prevent the hatch becoming detached from the canopy.

6. Return the selector and handle to 'safe' position. On aircraft where the jettison handle is connected to the selector by bowden cable, stow the jettison handle and ensure the selector plunger is pushed fully home. At the same time ensure that the ferrule on the end of the bowden cable casing is seated correctly in its housing.

Return the hydraulic ram to its retracted position by hand pressure. Proceed to operate the hand pump to ensure that the hydraulic jack ram does not creep.

7. Raise the hatch.
8. At the next engine run again check the hydraulic jack ram for signs of creep.

(E) Record on the form 700 and 1125 as STI/VAMP/117 Vol. 3:2:D.18

-/2...

(F) Nil.

(G) Nil.

H J Pringle

(H.J.PRINGLE) CAPTAIN,
A/S.T.S.O.

Air Headquarters,
Southern Rhodesia Air Force,
New Salisbury Airport.

6th May, 1954.

VOL. 3 SECT. 2 SUB-SECT D16.

A. Supply Socket to Film Footage indicator Vampire FB9

B. The possibility exists that the sup ly socket to the Film Footage indicator can foul the elevator controls if the socket becomes detached from or is not fitted to the dummy stowage when the footage indicator is not in use.

C. Before next flight if the footage indicator is not in use the sup ly lead is to be loosely knotted before fitting the socket to the dummy stowage to ensure the socket does not foul the elevator controls if the lead becomes detached.

D. Record on F700 X F1125 as Vol.3: 2: D16 satisfied

(H.J. PRINGLE) CAPT.,
A/S.T.S.O.

Air Headquarters,
Southern Rhodesia Air Force,
NEW SALISBURY AIRPORT.

4 May 1954.

VOLUME 3, Section 2, Sub-Sect. D 14.

A. No. 1 Fuel Tank Bays : Chafing STI/VAMP/119.

B. 1. Vampire Marks 3, 5, 9 and 10 aircraft.

2. Vampire Mark 11 aircraft "WZ" Series and
Serial Nos. XD.375 to 380 (incl.)
XD.388 to 394 (incl.)
XD.403, 405, 425, 429
XD.430
XD.433 to 440 (incl.)

C. A case has been reported where a No. 1 wing fuel tank has been chafed by the edges of the Hycar packing sheets introduced by Mod. Vam. 3045 and by the bottom edge of the centre channel and its attached joint plates situated at the rear wall of the No. 1 fuel tank bay.

D. At the next removal of either No. 1 wing tank and not later than the next Minor Servicing carry out the following work on aircraft embodying Mod. Vam. 3045. If the modification has been embodied in part this instruction will only apply to those aircraft on which the embodiment has been effected in No. 1 wing tank bays.

1. Increase the chamfering of all exposed edges of the Hycar packing sheets to ¼" x 45°.

2. Radius the bottom edge of the centre channel stiffener and the bottom edges of its attached joint plates at the rear wall of the tank bay. Wrap the channel and joint plates with Tape Self Adhesive PVC 1" Stores Ref. 32/764 (or nearest available size). This tape is in 25 yd. rolls and is to specification UK/AID/909/1.

E. Record on the appropriate form.

F. Nil.

G. Nil. Production aircraft now embody this requirement and the Mod. leaflet for Mod. Vam. 3045 has been amended.

(H.J.PRINGLE) CAPTAIN,
A/S.T.S.O.

Air Headquarters,
Southern Rhodesia Air Force,
New Salisbury Airport.

30th April, 1954.

VOLUME 3, Sect. 2, Sub-Sect. D 13.

A. Aileron Mass Balance Tubes - Non Standard - STI/VAMP/69

B. Vampires Mks. 5, 9, 10, 11, fitted with Port Ailerons Serial Odd Numbers FL/DH/1649 to 2593 inclusive, and starboard Ailerons Serial Even Number FL/DH/1546 to 2560 inclusive, and all Ailerons within this Serial Number range held as Spares or in Stores.

C. Cases have been reported of rough wooden plugs being inserted in the lead at the ends of the aileron mass balance tubes. These plugs have been found to work out of the tubes and severely restrict the airleron movement.

D. 1. At earliest opportunity and not later than the next Primary Star Servicing, the following action is to be taken:

(i) Remove ailerons bearing Serial numbers quoted in Para. B from aircraft.

(ii) At inboard end of outboard balance tube and at each end of inboard balance tube, drill a 3/32" hole parallel to aileron chord 1" from ends of tubes and fit a 3/32" M.S. split pin of suitable length.

2. Action in accordance with (D)(ii) above is to be taken on all Ailerons bearing Serial Numbers quoted in Para (B) held as spares or in Stores, before issue.

E. Enter on F 700 as STI/VAMP/69 satisfied and record on Form 1125.

F. Nil.

G. This non-standard practise of plugging has been stopped on production.

(H.J. PRINGLE) CAPT.,
A/S.T.S.O.

Air Headquarters,
Royal Rhodesian Air Force,
NEW SARUM.

4th January, 1957.

R.R.A.F. Technical Order.

Vol. 3, Sect. 2, Sub-Sect. D12 (Issue 2)
(Superseding Issue 1, dated 6.4.54.)

Nose Leg Air Inflation Valve - Fouling Nosewheel Door Guide Plate
STI/VAMP/115A. (Amending STI/VAMP/115)

B. Vampire all marks, and all Nose Compression Legs held as spares or in Stores.

C. Cases have been reported of damage to the air inflation valve situated at the base of the nose compression leg caused by the guide plate fouling the inflation valve on heavy landing or due to under inflation of the nose strut.

D. At the first opportunity and not later than the next Primary Star Servicing proceed as follows:

1. Jack up nose undercarriage, remove air inflation cap and release air pressure in the manner laid down in A.P. 4099.

2. Replace air inflation cap.

3. Compress nose leg fully and ensure that minimum clearance of 0.1" is maintained at nearest point between air inflation cap and nose wheel guide plate when compression strut is rotated.

4. If the guide plate required filing, remove it from the nose leg to obviate possible damage to compression strut. After removal file guide plate to obtain required clearance, radius all sharp corners and refit.

5. Re-charge compression strut as laid down in appropriate A.P.

6. Nose Compression Legs held as spares or in Stores are to be rectified in accordance with this Instruction before issue, and suitably labelled.

E. Record on Form 700 and 4801 as STI/VAMP/115A.

F. NIL.

G. NIL.

Source: A.M./S.T.I.

(B.H. GIBBONS)
Squadron Leader,
S.T.S.O.

DISTRIBUTION.

O.C.M.U.	(1)
Tech. Office/M.U.	(1)
A.R.S.	(3)
Components Sect.	(2)
O.C. Equip. Depot.	(2)
No. 1 Squadron	(3)
No. 2 Squadron	(3)
Tech. Stats.	(1)

VOLUME 3. SECT.2.SUB.SECT.D.11.

A. Hydraulic Jacks, Type AIR 41192 for Undercarriage Retraction - Faulty Manufacture - STI/VAMP/116.

B. Vampire Aircraft, all Marks : all Hydraulic Jacks, Type AIR.41192, Serial Nos. LK.2090 to LK.2715 inclusive, installed in complete aircraft and in spare undercarriages assembled to wings and in spare undercarriage assemblies, and jacks held as spares.

C. Cases have been reported of jack piston part number 50250 with one inch diameter hole drilled too deeply in head. One case resulted in shearing of piston head from ram causing collapse of undercarriage.

D. 1. Complete Aircraft in Service: At first opportunity and not later than next Primary Star Servicing check Serial numbers of jacks if any found within suspected range quoted above take the following action:-

a) Remove jack, strip and check depth of hole. Depth must not (repeat NOT) exceed 21/32 inch to bottom of parallel portion.

b) If found satisfactory re-assemble (fitting new seal part number ADS 408/8) and pressure test in accordance with AP.1803B, Vol. 1, Section 11, Chapter 18, Appendix 2 and refit and paint "STI/Vampire/116" on Jack Cylinder in accordance with Para. (E) below.

NOTE 1: If facilities for pressure testing jacks are not available, operations (a) and (b) above are not to be carried out. Instead jacks within the suspected range are to be replaced by serviceable jacks outside the suspected range or jacks within suspected range previously inspected and tested before issue and found correct and marked in accordance with para. (E) below: suspected jacks are to be returned through normal channels for examination and rectification by Messrs. Lockheed Hydraulic Brake Co. Ltd., Speke.

2. Undercarriage Assemblies, Undercarriages assembled to wings and jacks held as spares. Actions (a) and (b) above to be carried out before delivery, or if delivered, before use. Note 1 also applies.

NOTE 2: If any operational serviceability difficulties arise from unavailability of spare jacks notify details immediately to Air Staff Tech. Stats.

E. Jacks within the suspected range found satisfactory in initial examination in accordance with (a) above and those outside the suspected range are to have "STI/Vampire/116" painted conspicuously on the Jack Cylinder.
Record on Forms 700 and 1125 as STI/VAMP/116.

F. Nil. G. Nil.

(R.M. PARRY) LT.
E.W.T.O.

RMP/EMT.

VOLUME 3. SECT.2. SUB.SECT. D.10.

A. Pacitor Fuel Contents Gauges, Locating Spigot : Incorrect Assembly in Main Fuel Tanks : STI/VAMP/78.

B. Vampire aircraft, all Marks to which SPARE fuel tanks, P.003425 AND, have been fitted; and spare tanks P.003425 held in Stores.

C. A number of cases have occurred where main fuel tanks to Pt. No. P.003425 AND, despatched as spares, have the spigot location in the top of the tank for the Pacitor fuel gauge tank unit assembled without jointing compound. In some cases, the spigot may be in the incorrect position and the securing screws may be loose.

Only tanks where the spigot plate has been covered over with flameproof covering are affected, and, of these, some have already been rectified. The rectified tanks have D.O.I. 14797 stencilled on the modification record panel and are provided with a rip off patch at the spigot plate position. The rip off patch is also provided on new production tanks.

D. 1. Where spare tanks P.003425 AND have already been installed in aircraft, no action need be taken, provided the Pacitor fuel gauge tank unit is correctly assembled in the top spigot and no fuel leaks are apparent. (The fit of the Pacitor Tank unit on the spigot may be checked through the tank filler aperture). On the next removal of the tank, this S.T.I. is to be complied with.

2. Before installing spare fuel tanks to part number P.003425 AND, refer to Para. C. Where necessary the following action is to be taken :-

3. Locate the Pacitor fuel gauge tank unit spigot, which is fitted approximately in the centre of the top of the tank. A circular depression will be felt in the covering at this point.

4. With a pair of dividers, mark out a circle approximately 4½" diameter at the above location. Carefully cut round the marked line through the outer glass fabric and the cellular rubber self sealing layers down to the depth of the tank shell. Use a very sharp knife frequently dipped in water and avoid damaging the tank shell.

5. Remove the circular pad of cellular rubber material. This will expose the eight mushroom head bolts securing the cover plate over the tank unit spigot. Retain the pad for future use.

6. Remove the bolts and cover plate, thus exposing the spigot plate.

7. Using a spare Pacitor fuel gauge tank unit. G.P. 352 059 Stores Ref. 6A.2822, assembled on its mounting flange at the bottom of the tank, check that the spigot plate is in its correct position. Adjust as necessary, and fix in position with an approved jointing compound.

8. Re-assemble the cover plate securely with jointing compound and remove the spare tank unit.

9. Apply one coat of self sealing tank cement 32D307 or 320 to the cover plate and one coat to the pad of rubber material (removed in para. 5) and when tacky, place in position and stick down.

/2....

10. Scrape the finish off the glass fabric covering over an area about 3" all round beyond the cut edge and prepare a rip off patch of glass fabric (DTD.797 32D/321 or 32D/322) approximately 9" diameter.

11. a. Apply two coats of cement to the area previously cleaned and three coats to the patch of glass fabric. When the final coats of cement are tacky place the patch in position and stick down.

B. As an alternative to the procedure outlined in Para. 11a, the rip off patch may be stuck down as follows :-
Apply one coat of fireproof lacquer (DTD.900 32D/323) to the tank surface and two coats to the glass fabric. While still wet, place the fabric in position and rub down with a dry cloth. The lacquer should dry in about ten minutes.

12. Allow to dry for at least 4 hours and then apply two coats of fireproof lacquer preferably by spray.

13. Stencil on the rip off patch in ½" white lettering "Pacitor Tank Unit Attachment Spigot".

E. Record on form 700 and 1125.

F. NIL.

G. A rip off patch is being provided on all new production tanks at this location.

NOTE: 1. Full instructions for the repair of self sealing coverings is given in A.P.4117,Vol.4, and 6, Section 5.

NOTE: 2. The following materials are required for the satisfaction of this S.T.I.

1. Self sealing tank covering cement (32D/307 or 320)
2. Glass fabric DTD.797 (32D/321 or 322)
3. Fireproof Lacquer DTD.900 (32D/323)

(R.M. PARRY) LIEUT.
F.W.T.O.

RMP/EMT.
12 April, 1954.

R.R.A.F. Technical Order
Vol 3, Sect. [illegible], Sub-Sect D7 (Issue 2)
Cancelling and Superseding
Vol 3, Sect. [illegible], Sub-Sect D7 (Issue 1)
Dated [illegible]th, January 1954

Air Headquarters,
Royal Rhodesian Air Force,
P.O. Box 8131, Causeway,
SOUTHERN RHODESIA.

25th, September 1956.

A. [illegible] CONTROL ELLIPTICAL PULLEYS : SECURITY
Special Technical Instruction/Vampire/108.

B. Vampire all marks FBC and T. Mk. II.

C. Cases have been reported where the countersunk Bolt Pt. No. AS.1[illegible]2/9E (28D/960[illegible]) which is screwed into and peened to the rudder elliptical pulley in the [illegible] and starboard booms had dropped out, causing a restriction in the rudder controls. This was due to the threads into which the bolt is screwed being damaged by taking out the bolt without first removing all the burr which locks the bolt to the pulley. Thus any bolt which is fitted after threads are damaged will be insecure.

D. At the next Minor Inspection and whenever the Elliptical Pulley installation is disturbed, examine the bolt Pt. No. AS.1[illegible]2/9E for security at the rudder and elevator elliptical pulleys.

1. Where a bolt is found loose, remove the pulleys as for a cable change and proceed as follows:-

2. Remove completely all burr which locks the bolt to the pulley.

3. Unscrew the bolt and examine the threads in the pulley for damage.

4. Where threads are damaged, the pulley must be replaced.

5. Screw in a new bolt Pt. No. AS.1882/9E (Ref 28D/9606) and file off until 1½ threads remain proud of the pulley.

6. Burr over the bolt with a flat punch on one side only, care be [illegible] taken not to damage the pulley.

7. Refit the pulleys, connect the cables and rig in accordance with the relevant A.P. Check the controls for safety, locking and freedom of movement.

E. Record on appropriate form.

F. [illegible].

G. [illegible].

(L.H. [illegible]) [illegible]
S.T.S.O.

Source : [illegible] 4132040/52/[illegible] 1B
Dated : [illegible]th, January 1954.

Distribution:

CC/MU	(1)	Tech. Stats	(1)
ARS	(2)	File	(1)
MU. Tech. Control	(1)		
No. 1 Sqdn.	(3)		
No. 2 Sqdn.	(3)		
Components Section	(2)		

DUE TO INCORRECT MARKING OF THE COCKPIT TEMPERATURE CONTROL HANDWHEEL 15CE.497A ANGULAR MOVEMENT ON CAMS DOES NOT PRODUCE CORRECT TEMPERATURE CONTROL AS THERE IS NO PERIOD OF MIX (COLD & HOT) OR REDUCE (FROM HOT TO OFF). THE HANDWHEEL SHOULD NOW BE REMARKED AND CAMS SHOULD BE RESET AS ILLUSTRATED BELOW.

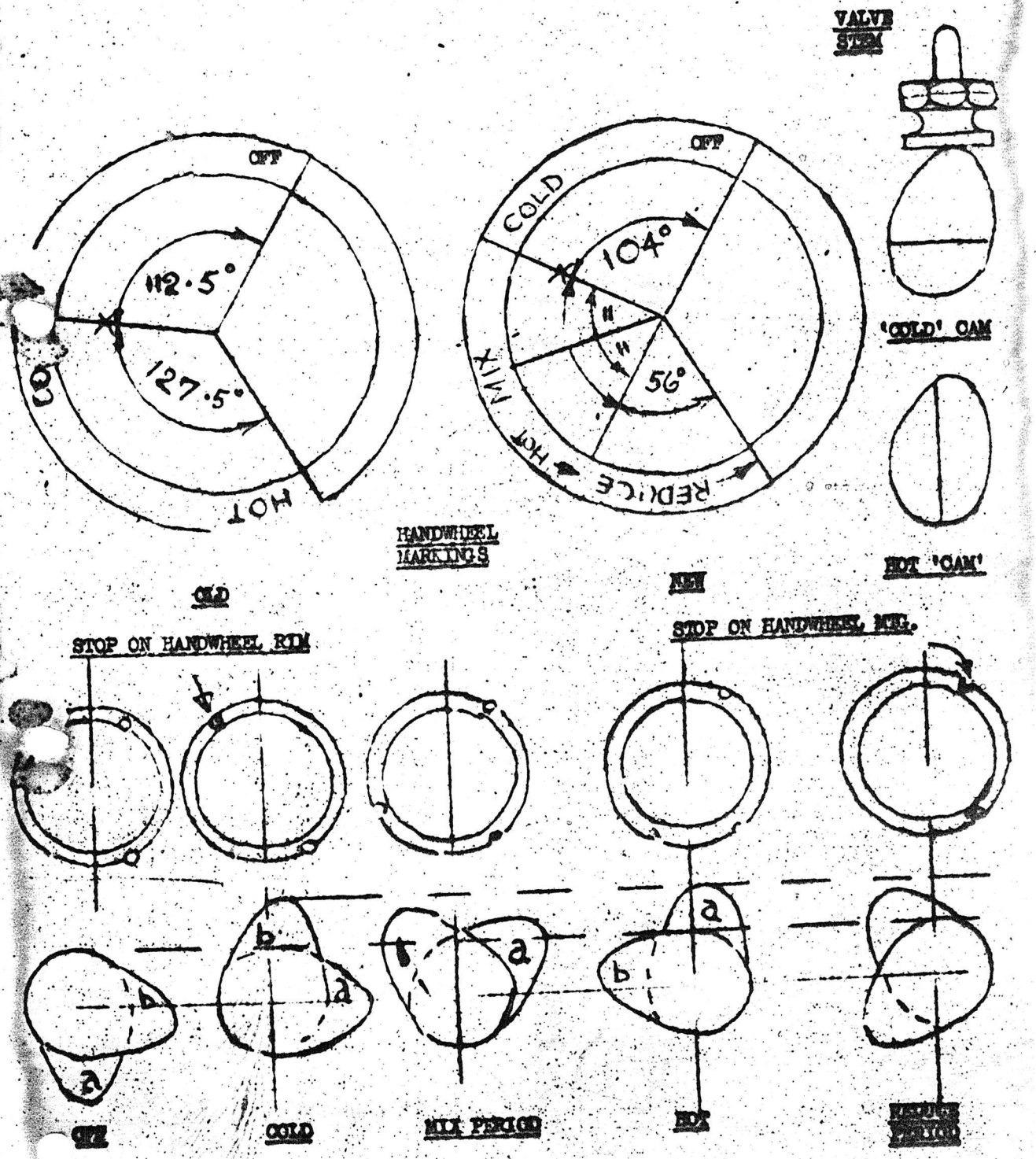

RE-SETTING OF COCKPIT AIR TEMP. CONTROL

DWG. NO. [illegible]

NOSEWHEEL JACK FLEXIBLE PIPES: CHAFING
S.T.I./Vampire/109

A. Vampires Mk.11.

B. Cases have been reported where the hydraulic nosewheel jack flexible down line pipe Part No. AIR.56286-15"5 has been chafed by the split pin securing the pin through the radius rod kidney slot. (The 'up' line pipe is Part No. AIR.56286/12"0).

C. PART I

Immediately on receipt of this instruction examine the flexible pipes to the nosewheel jack. Replace any damaged pipe in accordance with procedure laid down in AP.4099J Vol.1, Sect.3, Chap.6.

2. Wrap both pipes with Empire tape and secure the tape with waxed cord. Lash both pipes lightly together at the position where the bracket is shown on the attached drawing R.15.S.108 ensuring the down line pipe is as far outboard as possible.

3. Check that the split pin fitted on the outboard side of the pin through the kidney slot has its legs fitting firmly around the periphery of the pin's collar.

PART.II

As soon as convenient and not later than the Next Minor Servicing refer to the attached drawing No.R.15.S.108 and carry out the following work.

2. Manufacture the bracket as detailed.

3. Remove the false floor beneath the port control column.

4. Position the bracket over the pipes to the fairing. The pipes should move freely in the bracket. The dimensions $5\frac{1}{2}$" and $2\frac{1}{4}$" are quoted to miss the rivetted structure when drilling.

5. Drill the fairing in conjunction with the bracket and attach the bracket as detailed on the drawing.

6. Check the docking for cleanliness and refit the false floor.

D. Record on appropriate from as "Pt.1" or "Pt.2." as appropriate.

E. Nil.

F. Modification action is being introduced to incorporate a bracket similar to the action detailed on this S.T.I.

for. (B.H. GIBBONS) MAJOR
M.S.O.

Vol.3. Sect.2. Sub-Sect. D.4.

TANK BOOSTER PUMP DRAIN PIPE POSITION
S.T.I/ Vampire/107

A. Vampire Aircraft all Marks.

B. Cases have been reported of the fuel tank booster pump drain pipe not emerging below the level of the cannon bay doors and not being cut off at an angle which should face aft. The pipe is secured to the bottom of the forward face of the fireproof bulkhead and provides a common drain with the main tank filler neck drain which comes from the base of the tank.

C. At or before the next Minor servicing proceed as follows:-

1. Inspect the drain pipe and ensure that its end is cut off at a 45° angle with the angle facing aft and that approximately ⅛" of plain portion of pipe above the angle emerges below the level of the gun bay doors.

2. Where necessary change the pipe.

D. Record on the appropriate Form.

for. (B.H. GIBBONS) MAJOR
M.S.O.

Source: A.M.P. A96785/51/MR BNG 1B

Date: 6 Jan 54

Vol.3. Sect 2. Sub Sect. D.3.

CANOPY DRY AIR LINE: BLOCKAGE
S.T.I./VAMPIRE 106

(A) Vampire Mks. 3, 5, 9.

(B) A case has occurred of a canopy disintegration which was considered to have been due to the connection at the canopy for the Silica Gel dry air line being partially blocked.

(C) At or before the next Daily Servicing proceed as follows:-

(1) Disconnect the rubber hose from the canopy connection and check that the connection is not restricted or damaged.

(2) Fit new hose where necessary.

(D) Record on the appropriate form.

(B.H. GIBBONS) MAJOR
M.S.Q.

Source: Postagram
A28630/49/AIR ENG 1(B)

Date: 31.12.53

No 1 Squadron (8) copies
No 2 Squadron (4) "
A.S.F (2) "

Vol. 3 Sect. 2 Sub-Sect. D.2.

Vol. 6 Sect. 2 Sub-Section D.1.

SPECIAL TECHNICAL NOTICE/EAAF/INSTRUMENTS/2
GYRO UNITS BEZEL GLASSES (6B/2570).

1. It is notified that the bezel glasses (Ref. 6B/2570) were originally produced with a locating notch for mating with a lug on the locating plate fitted to the front of the type A Gyro Units (6B/2035 and 6B/1992).

2. In order to reduce the number of breakages caused by the weakness introduced by this notching, glasses will be supplied unnotched in future. Before the new glasses can be fitted to existing equipments however, the lug on the locating plate must be removed thus ensuring correct seating.

3. Care is to be taken to ensure that the aircraft heading rectangle on unnotched glasses is aligned with the lubber line.

(H.J. PRINGLE) LINCS.
O/C M.U.

SOURCE: A.M. Postagram A.118106/52/Air Eng. 4(a) 1.
File 3 GR/516/4/1/Eng. Vol. e Encl. 21 refers.

DATE: 12th November, 1953.

REP/REF. 6 Jan 54.

No 2 Squadron 4 Copies
H.S.F. 2 Copies

Vol. 3 Sect. 2 Sub-Sect. D.2.

Drop Tank Pressurising Air Pipe - Fracture
STI/SAAF/Vampire 14
(Superseding and Cancelling STI/Vampire/97)

(A) Vampire aircraft Mks. 5 and 52 and pipes Ref. 26FC/4650 and 26FC/5763 held as spares or in store.

(B) Cases have been reported of the pipes connected to the air pressure reducing valves in the drop tank transfer system fracturing. These pipes Part No. POC3041 AND Port Ref. 26FC/4650 and POC3043 AND Starboard Ref. 26FC/5763 were introduced by Mod. Vampire 591. Failure of these pipes is considered due to bumping or manipulation and for this reason are to be removed before engine change is effected.

(C) 1. Before the next MINOR servicing proceed as follows:-

(i) Locate the pressure reducing valves Part No. AC0.4798 or post Mod. Vampire 3068 Part No. AC4.16314 that are mounted on the port and starboard upper members of the engine mounting and remove the relevant pipes that emerge from No. 4 bulkhead.

(ii) Examine the ends of the pipes that connect to the pressure reducing valves for signs of fracture or of having been opened out in the bore. If the pipes show any signs of fracture they are to be changed before drop tanks are installed.

(iii) Existing pipes on aircraft whether of 20 or 22 SWG are only to be changed if fracture is evident.

2. Air pressure pipes held as spares or in store are to be checked as above prior to installation.

(D) Record on Form 1125 as applicable.

(E) Report cases of fracture to Tech. Control.

(F) Modification action in hand introducing brass pipes. Quantities of these pipes being manufactured and will be forwarded for stock purposes later.

H.J. Pringle
(H.J. PRINGLE) LIEUT.
O/C M.U.

SOURCE: A.M. Postagram A.96785/51 dated 8th October, 1953. and 3 Group (T2).

DATE: 7th December 1953.

HJP/EMT. 6 Jan 54.

VOL. 3. SECT. 2. SUB. SECTION D.1.

VOL. 6. SECT. 9. SUB. SECTION D.1.

OXYGEN VALVES : CORRECT INSTALLATION STI/VAMP/[illegible]

A. All Vampire aircraft.

B. Cases have been reported of the manually operated valve in the oxygen system being fitted in the reverse direction to that given in A.P.1275, Vol. 1, Section 8, Chap. 1. Para. 104. This states that the lower connection of the valve should always be connected to the line of continuous high pressure which is the line connected to the oxygen bottles. On these Mk.VIII valves the lower connection is the one nearest the base of the valve. Single seat aircraft have one such valve fitted which also has the external charging connection integral with it. Two seat aircraft have an additional line valve located between the oxygen bottles and the pilot's regulator.

C. As soon as possible and not later than the next MINOR servicing check that the valve or valves are fitted in accordance with the explanation given in Para. C. If it is necessary to rectify the fitting of the valves release all the oxygen contents and correctly assemble. Re-charge the system to full and carry out a leak test.

D. Record on appropriate form.

SOURCE: A.M. Postagram A72126/50/Air Eng. 4 dated 13th October 1953.

DATE: 12th November 1953.

Signed. (H.J. PRINGLE) LT.
S.T.O.