G. Moller

THE DE HAVILLAND AIRCRAFT CO. LTD.

Form No. 136E

E.O.I. GENERAL INSTRUCTIONS.
Z15 - 1469. INDEX.

D.O.I. No. 34914

Date 29-9-58

# DRAWING OFFICE INSTRUCTIONS

**Type of Machine** GENERAL INSTRUCTION. ALL AIRCRAFT TYPES.

**Subject** ALTERATION TO DZUS FASTENER TYPE S.5 SPRINGS.

THE RIVET HOLE CENTRES ON THE EXISTING S.5 SPRINGS ARE SUCH THAT WHEN THESE SPRINGS ARE USED ON THIN PLATE, WHERE THE CENTRE STUD AND RIVET HOLES ARE DIMPLE COUNTERSUNK, THERE IS DEFINITE INTERFERENCE BETWEEN DIMPLES, RESULTING IN BADLY SEATING SPRINGS AND/OR CRACKS IN THE PLATE.

TO ELIMINATE THESE FAULTS A NEW RANGE OF S.5 SPRINGS HAS BEEN INTRODUCED, IN WHICH THE RIVET HOLE CENTRES HAVE BEEN INCREASED TO 1".25, AS AGAINST 1".0 ON EXISTING SPRINGS.

A LIST OF THE OLD PART NUMBERS TOGETHER WITH THE EQUIVALENT NEW PART NUMBERS, IS GIVEN BELOW. THESE LATTER SPRINGS MAY BE USED WHERE THE OLD TYPE S.5 SPRING IS CALLED FOR ON DRAWINGS, WITHOUT FURTHER REF. TO THE D.O.

EXISTING ASSY'S THAT ARE SATISFACTORY TO W.I.D. WILL NOT BE MODIFIED.

| OLD TYPE SPRING | NEW TYPE SPRING |
|---|---|
| S.5 - 200 - D.12 | S.5--125 - 200 - D.12 |
| S.5 - 225 - D.12 | S.5 - 125 - 225 - D.12 |
| | |
| S.5 - 300 - D.12 | S.5 - 125 - 300 - D.12 |
| S.5 - 325 - D.12 | S.5 - 125 - 325 - D.12 |

Use these on all new Designs.

These are used on Frame Canon Doors and will not be changed

N 8/12/58

DATE OF ISSUE 1 OCT 1958 DRAWING OFFICE

"This Sepia is issued only to enable dispersed factories to [illegible] they require. Under no circumstances must alterations be made to this Sepia, but a new one with [illegible] in issue will be sent on completion of any modification from Hatfield."

**Compiled by** ..... **Approved by** T. Young.

INITIALLED

(1) copies all DO Manuals please

(2) file

THE DE HAVILLAND AIRCRAFT CO. LTD.
Form No. 136E

.2. 30th August, 1956.

D.O. No. 10369.
Date 4th February, 1955.

# DRAWING OFFICE INSTRUCTIONS

Type of Machine GENERAL INSTRUMENT. ALL AIRCRAFT TYPES.
Subject STEEL AND L.A. TUBES, HEAT TREATMENT FOR BENDING.

L.A. TUBES.

TG.11 Issued to UK. 14/1/57

All tubing to Specification D.H.A. 63 is annealed therefore drawings calling for this tubing need not specify annealing. Tubing to Specification L.67 (T.9) must be annealed before use and drawings calling for this tubing must bear a note to this effect.

STEEL TUBES.

All steel tubing, with the exception of tubes to specifications T.55, T.61 and D.T.D.743 must be annealed before bending and drawings must bear a note to this effect. In this connection it should be noted that after tubes to specifications T.35 and T.45 have been annealed to facilitate bending, subsequent heat treatment (i.e. normalising after bending) does not necessarily restore the minimum properties quoted in the specifications hence when stressing T.35 and T.45 tubes which have been annealed the "as welded" values as given in the D.O. Handbook must always be used.

Where these values are considered to be inadequate, tube to specification T.59 must be used, as heat treatment subsequent to annealing and bending fully restores the mechanical properties of this material. Drawings calling for Tubing to Specification T.59 must specify that these tubes are to be hardened and tempered subsequent to annealing and bending.

Tubes to specifications T.55, T.61 and D.T.D.743 need not be annealed before bending but, if they are bent through a mean radius of less than 5X diameter then they must be stress relieved to D.H.A.411 after bending and drawings must bear a note to this effect.

Where tubing to Specification T.26 is used for piping services no heat treatment is required either before or after bending i.e. it may be used and left in the "as received" condition.

If tubing to specifications T.50, T.57 or T.60 is required to be bent the Laboratory should be consulted at an early stage in the design.

Tubing to Specification T.58 cannot be bent without annealing. This causes it to revert to T.55 therefore T.55 must be used in place of T.58 in applications where bending is involved.

MONEL TUBES.

Monel tubing to specification D.T.D.477 is supplied in the annealed condition. Tubes to this specification must be stress relieved after bending and to avoid the formation of scale this process must be carried out in a special controlled atmosphere furnace. This equipment is available at Leavesden.

TUNGUM TUBES.

For stress relieving of tungum tubing after bending see D.O.I.10358.

Compiled by ..... Approved by T. Young. INITIALLED

# DRAWING OFFICE HANDBOOK

## INTRODUCTION

This Handbook is the property of The de Havilland Aircraft Co. Ltd., the contents are private and confidential and are not to be copied or communicated to any other person without the permission of the Company.

Should the recipient leave the Company's service, the Handbook must be returned to the D.O. Standards Section (Ext. 550) to whom any queries regarding this publication should be referred.

The Handbook comprises a number of separate sections dealing with specialised aspects of Design and Drawing Office Procedure. Details of each section are described below and an Index is included at the beginning of each section. Independent sections are also issued to other departments as necessary.

## SECTION I. DRAWING OFFICE PRACTICE

General administrative instructions and D.O. procedure

Information on the compilation and issue of drawings and inter-department communications. This section will, also, include Data Sheets on the more commonly used Standard Parts such as Nuts, Bolts, Rivets, Pipe Coupling, etc. and instruction sheets on de Havilland Standard Tools and Processes.

## SECTION II. DETAIL DESIGN PRACTICE

This section will contain specialised information as applies to Detail Design, e.g. Design of Castings and Forgings, Press and Foundry Technique, Design of Machined Fittings, Description and uses of Rubber and Adhesives, etc.

## SECTION III. TECHNICAL DATA

Contains Data sheets and explanatory notes on Strength of Materials and their uses, Rivet and Bolt strengths, Strut Curves, Tube Constants, Weight Data and specialised information required for strength calculations.

The De Havilland Aircraft Company.
Hatfield Aerodrome. Hertfordshire.

April 1947

| Amendment No. | ~~1~~ | ~~2~~ | ~~3~~ | ~~4~~ | ~~5~~ | ~~6~~ | ~~7~~ | ~~8~~ | ~~9~~ | ~~10~~ | ~~11~~ | ~~12~~ | ~~13~~ | ~~14~~ | ~~15~~ | ~~16~~ | 17 | 18 | 19 | 20 | 21 | 22 | 23 | 24 | 25 | 26 | 27 | 28 | 29 |
|---|---|---|---|---|---|---|---|---|---|---|---|---|---|---|---|---|---|---|---|---|---|---|---|---|---|---|---|---|---|
| Incorporated | 30 | 31 | 32 | 33 | 34 | 35 | 36 | 37 | 38 | 39 | 40 | 41 | 42 | 43 | 44 | 45 | 46 | 47 | 48 | 49 | 50 | 51 | 52 | 53 | 54 | 55 | 56 | 57 | 58 |

## TIME SHEETS

The time spent on each job must be accurately recorded on the official Time Sheet. This is most important to enable the cost of each job to be analysed. Time Sheets must be available for collection by 9.30 a.m. on each Monday morning and should give the following information :–

(i) Aircraft Type
(ii) Aircraft Project No.
(iii) Identification letter for the component on which work has been performed. (See paragraph 2.4 – Part Numbering System for component letter).
(iv) Description of work and day to day times and totals actually worked on that component.

Project Numbers for Trial Installations, Design Development, etc., can be obtained from the Section Leader, or Designer in charge of the component.

A facsimile Time Sheet is reproduced below and should be used as a guide when preparing individual Time Sheets.

Form 128a HP.
THE DE HAVILLAND AIRCRAFT CO., LTD. **TIME SHEET** Week Ending SATURDAY 19__

Name A.N. OTHER No. STAFF Trade EXP. D.O. Rate_____ Per_____

| JOB No. | JOB LABEL SERIAL No. | DETAILS | Mon. | | Tues. | | Wed. | | Thur. | | Fri. | | Sat. | | Sun | TOTAL | | | |
|---|---|---|---|---|---|---|---|---|---|---|---|---|---|---|---|---|---|---|---|
| | | | T. | O/T. | T. | O/T. | T. | O/T. | T. | O/T. | T. | O/T. | T. | O/T. | O/T. | T. | O/T. | Ex. | Pd. |
| 1049/D | D.H. 103. | TF - FIN RIBS | 7·45 | 1·15 | | | | | | | | | | | | 7/45 | 1/15 | | |
| 2782 | | SICK | | | 7·45 | \ | | | | | | | | | | 7/45 | / | | |
| 1049/D | D.H. 103 | C.F - CONTROL COLUMN | | | | | 7·45 | 1·15 | 4·15 | | | | | | | 12 | 1/15 | | |
| 1049/D | D.H. 103 | M - FIRST AID STOWAGE | | | | | | | 3·30 | 1·15 | | | | | | 3/30 | 1/15 | | |
| 2783 | | LEAVE MOS CONFERENCE ON D.H. 103. | | | | | | | | | 4·15 | | | | | 4/15 | / | | |
| 1049/D | D.H. 103 | W. WING – FRONT SPAR DETAILS | | | | | | | | | 3·30 | \ | \ | \ | \ | 3/30 | / | | |

| ALPHABETICAL REFERENCE INDEX | DATA SHEET NO. | OTHER REFERENCES |
|---|---|---|
| * Denotes additional information retained in Standards Section | | |
| ANTI-VIBRATION MOUNTINGS | | * |
| BEARINGS, Ball, Limits & Abutments | 1/13 | |
| Rod End (Ball Bearing) | 1/13B | Hoffman CF & CM Series |
| Self aligning (solid) | 1/13B | Hoffman CJ Series |
| Plain | 1/13C | |
| Sealing Washers - Sprung | | DHS. 905, 934, 937 |
| BENDING OF PLATES | 1/26A | |
| Minimum Bend Radii | 1/26B | |
| BLOCKS, Clamp | | DHS. 761 to 766 |
| BOLTS, General Notes | 1/4A | |
| Hexagon | 1/4B | |
| Slotted AS. Series | 1/5 | |
| DHS. Countersunk Head | 1/5A | |
| DHS. Countersunk Head (900 series) | 1/5F | |
| Phillips' Recess | 1/5B | |
| Holes for DHS Special CSK | | DHS. 526 - 556 |
| Drilled for Wire Locking | 1/4A-1/29A | DHS. 514 |
| Captive (Fusion welded) | | DHS. 140/1, 157,859 |
| Strength of | III/43B | 859 |
| Shear Values - DHS. Bolts | III/43G | |
| Identification of Special | 1/4A | |
| BEDDING TAPE (Bestobell J.29) | | * |
| BONDING FLEXIBLES | | AS.3360 |
| BURRS - Copper & Alum | 1/4D | |
| BUSHES, Plain, Pressed in | 1/13C | DHS. 419 |
| - ditto - for Line Reaming | 1/13C | DHS. 418 |
| ditto Self Lubricating | | B.S. 1131 * Oilite Catalogue |
| Shouldered Knurled - Tapped | 1/31C | DHS. 183 |
| Knurled - Plain | | AS. 2371 |
| Shear Plain Parallel | | AS. 3119 |
| Plain Tapered | | AS. 484 |
| Tapped | | AGS. 934 |
| Screwed Rod for AGS. 934 | | AGS. 575 |
| For Ball Bearing Sealing Washers | | DHS. 946 & 948 |
| BULB ENDS (Pipe Joint) | | DHS. 509-510 |
| Flight refuelling Pipe Joints | | DHS. 539-541 |
| CADMIUM PLATING, Allowances for | 1/2C | |
| CHROMIUM PLATING, Hard. Allowances for | 1/2C | |
| - ditto - Exterior Bolt Heads | | DHA. 369 |
| CAPS Filler | | See SDM Index * |
| Blanking | 1/19A | |
| CANVAS | | * |
| CHAINS, Attachment | | * |
| Attachment Tags | | * |
| | | DHS. 180 |
| CHAINS AND END CONNECTIONS | 1/14 | |
| CIRCLIPS | | AGS. 2030-1 |
| CLIPS Miscellaneous | 1/12A | |
| 'P' Plain, Rubber Covered and Bonded | 1/12B | |
| 'P' Nylastic | | AS. 4580-1 |

| DRAWING OFFICE HAND BOOK INDEX | | DATA SHEET NO. | OTHER REFERENCES |
|---|---|---|---|
| CONDUITS – Electrical, Belled & Expanded | | | DHS. 546 |
| CONTROL CABLE | General | 1/16A | |
| | Swaged Ends BS. SP. 33-39 | 1/16B | |
| | Swaged Ends 45 cwt. & greater | 1/16C | |
| | Anchorage | 1/18 | DHS. 218-9, 513 |
| CONTROL HAND KNOBS | | | SDM. 185 |
| CONVERSION TABLES, Decimal Equivalents, S.W.G. etc. | | 1/1C | |
| | General | 1/1A | |
| | Temperature | 1/1B | |
| CORD | (String) | | * |
| | Rubber Shock Absorber | | F16, F51 |
| COUNTERSINKS - Machine Spin Dimpled | | 1/40A | |
| | DHS. Bolts, Flush Finish | | DHS. 526 & 556 |
| COUPLINGS, Pipe | | 1/19A-B | |
| CUTTERS, | Milling, Spotface, Counterbore | 1/39 | |
| DE-BURRING | Holes for Bolts, Rivets | 1/44A-B | |
| | Edges of plate etc. | | |
| DECIMAL EQUIVALENTS | | 1/1C | |
| DIMPLING FOR SOLID & CHOBERT RIVETS, ALSO BOLTS | | 1/40A | |
| DISTANCE TUBES | Ordinary | 1/4F | |
| | Close Tolerance | 1/18 | DHS. 329-30 |
| D.O. SYSTEM & DOCUMENTS | | Index of Text Prefaces Sec. 1. | |
| DRAIN VALVES | | | SDM Index |
| DRILL SIZES | | 1/1C | |
| DRILL HOLES FOR PLUG ENDS | | 1/30 | |
| EXTRUSIONS, USE OF HIGH STRENGTH L.A. | | Section II, Design Note 4 | |
| EYELETS, | Sail | | AGS. 232 |
| | P.V.C. Ferrules | | DHS. 117-118 |
| | Drain | | DHS. 83-5 |
| | Special (For Soundproof Lacing) | | DHS. 493 |
| FASTENERS | 'Dzus' Self Ejecting | 1/43A | * |
| | 'Dzus' Round & C'S'K. Head | 1/43B | |
| | Self aligning | | DHS. 185 & 397 |
| | Toggle | | DHS. 460 - 890, 891 |
| FELT | | | DTD. 590 * |
| FERRULE, | Hook, Elastic Cord | | AGS. 897 |
| FLANGES | Standard | | SBAC. RS. 300 etc. |
| FORK ENDS | Screwed | 1/17 | |
| | Swaged | 1/16B | |
| FORGINGS | Issue of Drawings | Design Note 1 | |
| GASKETS | Rubber & Cork etc. | | DTD. 762 |
| | Cork | | DTD. 789 |
| | Rubber, Rubberbonded, aluminium | 1/4G & H | |
| GREASE | | | See Treatment Chart |
| | Nipples | | SP. 21 |
| GROMMETS | | 1/21 | |
| HAND NUTS | | | AS. 2160-63 |
| HINGES | | 1/25 | |

| | | DATA SHEET NO. | OTHER REFERENCES |
|---|---|---|---|
| HOLES | Standard Slotted | 1/27 | |
| | Standard Lightening (Rubber Press) | 1/32A | |
| | Standard Lightening Flanged (Drop Hammer) | 1/32B | |
| | Clearance Drill | 1/1C | |
| | For Locking Wire | 1/29A | |
| | De-burring | 1/44A | |
| HOSE | Pipe connections | | DHS. 159, 160, 401 |
| IDENTIFICATION OF PIPE LINES | | | DHS. 518-9 |
| INSERTS, WIRE THREAD (AS SERIES) | | 1/4 K & L. | |
| JOINTS, Universal | | | Mollart-Willcox* |
| | Ball | | AGS. 385 |
| | Clamp Type | | DHS. 407-413 |
| | | | DHS. 473 & 884 |
| KNOBS | Control | | SDM.185 * |
| | Rotating | | AS. 2311-14 |
| LABELS | Anodised | 1/24A | |
| | Engraved - Etched | 1/24B | |
| LAMINATED FABRIC | Bar L.F.B. 82, 89 | | SBAC D.O. |
| | Sheet L.F.S. 21, 23, 26 | | Handbook |
| | Tube L.F.T. 40, 42, 45, 48, 49 | | Vol. 2 Plastics |
| LIMIT SYSTEM | | 1/2 A,B,C | |
| | Workshop | 1/2 D,E | |
| LOCKING | Bolts | 1/4A-1/29A | |
| | Other Components | 1/29A,B,C. | |
| MATERIALS | | Section III | |
| EXPLANATORY NOTES | | III/1A-B-C-D | |
| SHEET | Steel, Non-Stainless | III/2A | |
| | Steel, Stainless, Brass & Copper | III/2B | |
| | Titanium & Titanium Alloy | III/3A | |
| | Aluminium Alloy | III/4A | |
| | Aluminium Alloy & Aluminium | III/4B | |
| | Aluminium Alloy Plate | III/4C-D-E-F | |
| | Magnesium Alloy | III/4G | |
| BAR | Steel, Non-Stainless | III/5A | |
| | Steel, Case Hardening | III/5B | |
| | Steel, Stainless | III/5C | |
| | Titanium - Titanium Alloy | III/6A | |
| | Brass & Bronze | III/8A | |
| BAR & EXTRUSION | | | |
| | Aluminium Alloy | III/7A | |
| | Aluminium & Magnesium Alloy | III/7B | |
| | Properties of Light Alloy Rectangular Bar | III/7C | |
| TUBES | | | |
| | Steel, Non-Stainless | III/9A | |
| | Steel, Stainless | III/9B | |
| | Light Alloy & Magnesium | III/11A | |
| | Copper Brass & Tungum | III/12A | |
| FORGINGS & STAMPINGS | | | |
| | Steel, Non-Stainless | III/13A | |
| | Steel, Stainless | III/13B | |
| | Titanium & Titanium Alloy | III/14A | |
| | Light Alloy | III/15A & B | |
| CASTINGS | Classification & Design Stresses | III/17A | |
| | Light Alloy | III/17B & C | |
| | Magnesium Alloy | III/17D | |
| | Bronze & Steel | III/16A | |
| SPRING | Materials & Design Data | III/20A-23 | |

| | | DATA SHEET NO. | OTHER REFERENCES |
|---|---|---|---|
| NUTS | Use of | III/43A | |
| | Hexagon & Wing | 1/4C | |
| | Drilled for Wire Locking | 1/29A | |
| | Union | 1/19A | |
| | Stiff Nuts | 1/6A | |
| | Stiff Nuts DHS. & Packing Plates | 1/6B | |
| | Nut Plates | | DHS. 430 |
| | Inverted Anchor | | DHS. 494 |
| OILITE BUSHES | | | BS. 1131* |
| OIL SEALS | | | Westons * |
| PERSPEX | Sheet | | DTD. 339 |
| | Label Attachment Bush | | DHS. 359 |
| PINS | Split | 1/4B | S.P.9 |
| | Ground Steel | 1/7A-B | DHS. 94 |
| | HTS Shouldered | 1/17 | SP.4 & SP.113 |
| | 'Pip' Quick Release | 1/42A | |
| | 'Pip' Push Type - with Handle | 1/42B | |
| PIPE | Couplings | 1/19A-B | |
| | Bends - Standard Radii | | DHS. 511 |
| PLUG ENDS | Radiused Drill Holes | 1/30 | |
| PULLEYS | Cable | 1/18 | |
| | Standard Cable Groove | 1/18 | |
| | Cable anchorage | 1/18 | |
| PUNCHES | Standard Circular | 1/37 | |
| PROTECTIVE TREATMENT | | Text | A/C Treatment Chart |
| RIVETS | Solid | 1/8 | |
| | Solid Light Alloy - Strength of | III/41 | |
| | Solid Steel & Monel - Strength of | III/41A | |
| | 'Chobert' | 1/10A | |
| | 'Pop' (Monel) | 1/10B | |
| | 'Chobert' Strength of | III/42, III/42B & C | |
| | Countersinking Machine Spin Dimpled | 1/40A | |
| | Tubular | | AGS.513-6 & 501 |
| ROD END BEARINGS | | 1/13B | * |
| ROLLER BEARINGS | | | Makers Catalogue |
| RODS TIE | | | * W.8 |
| SCREWS | 'Phillips' Recess | 1/5C | |
| | Wood | 1/11 | |
| | Grub & Slotted | 1/5D | |
| | Parker Kalon | 1/5E | |
| SCREW THREADS | | 1/3A-B | |
| SEALS | Rubber, Rubberbonded, Aluminium | 1/4G-H | |
| SERRATIONS | Shaft & Hole (obsolete use 1/31D & E) | 1/31A | |
| | Flat Surfaces | 1/31B | |
| | Straight sided BS. 2059 Pt. 2 | 1/31D & E | |
| SHACKLES | | | SP.1 |
| SHIMS | Brass Washer | 1/4D | |
| | Materials : Brass, Spec. Attewell L.B.2 | | * |
| | L.A. Spec. Attewell L.A.3 | | * |

| | | DATA SHEET NO. | OTHER REFERENCES |
|---|---|---|---|
| SLOTTED HOLES | | 1/27 | |
| SPOTFACES Min. Sizes for Machined Components | | 1/41 | |
| SPROCKETS | | 1/15 | Reynolds * |
| SPLINES | | | (BS 2059 Pt. 1) |
| SPRINGS Design Data | | 111/20A-23 | |
| STIFF NUTS | | 1/6A | |
| STIFF NUTS (D.H.S.) | | 1/6B | |
| SWAGES - Stiffening (For Rubber Press) | | 1/33 | |
| SWAGED CONNECTIONS (on to Cable) | | 1/16 A, B & C | |
| STRENGTH OF, | LUGS | III/30 | |
| | ROUND BARS | III/31 | |
| | CIRCULAR TUBES | III/32 | |
| | WELDING | III/40 | |
| | RIVETS. Mushroom and Snap Head | III/41 | |
| | RIVETS. Steel and Monel in Stainless Steel | III/41A | |
| | RIVETS. Monel in Titanium | III/41B | |
| | RIVETS. Light Alloy - Dimpled Sheet | III/41C | |
| | RIVETS. Light Alloy - Cut C'S'K. in L.A. | III/41D | |
| | RIVETS 'Chobert' L. Alloy in L.A. | III/42 | |
| | 'Chobert' C'S'K. Hd. Steel in L.A. | III/42B | |
| | 'Chobert' Snap Hd. Steel in L.A. | III/42C | |
| | BOLTS | III/43B | |
| | BOLTS, Bearing Strengths | III/43C | |
| | BOLTS, Combined Shear and Tension | III/43D | |
| | BOLTS, C'S'K. Head H.T.S. - Civil | III/43E | |
| | BOLTS, C'S'K. Head H.T.S. - Service | III/43F | |
| | BOLTS C'S'K. Head Light Alloy - D.H.S. | III/43G | |
| STRESS FOR, | Tubes in Torsion | III/34 | |
| | Tubular Struts, Steel | III/35 | |
| | Tubular Struts, Light Alloy | III/37 | |
| TAGS | Chain | | DHS. 180 |
| TANK STRAPS | Large | | AS.2372-95 |
| | Small | | AS.2424-32 |
| THERMOMETER BULBS Fitting of | | | DHS.389 |
| TOOLS | Circular Punches | 1/37 | |
| | Crop and Pierce | 1/38 | |
| | Cutters, Milling | 1/39 | |
| TUBING | P.V.C. | | DHS. 181 |
| | Rubber DHA.65 | | DHS. 373 |
| TURN BUCKLES Tension Rods | | 1/17 | |
| UNDERCUTS | External | 1/34 | |
| | Internal | 1/35 | |
| | Gasket | 1/36 | |
| VALVES | Various | | See S.D.M. |
| WASHERS | Plain and Saddle | 1/4D | |
| | Special Plain and Support | 1/4E | |
| | Locking | 1/4F | |
| | Sealing | 1/4G & H | |
| | Cropped Light Alloy | | DHS. 56, 57, 59. |
| | Cropped Stainless Steel | | DHS. 367-368 |
| | Countersunk SS-LA-Steel | | DHS. 113-4-5 |
| | C'S'K 120° Brass, Chromiumed for upholstery | | DHS. 166 |
| | Cup, Steel Non-Stainless | | DHS. 95, 96, 97. |
| | Cup, Steel - Stainless | | DHS. 189-192 |
| | Cup, Flanged 120° | | DHS. 908-909. |
| WASHER PLATES (For Bearing on Wood) | | 1/28 | |
| WEIGHT DATA | | III/39A & B | SBAC D.O. Hand Book Vol. III |
| WIRE THREAD INSERTS (A.S. SERIES) | | 1/4 K & L. | |

CHAPTER 1. PREPARATION OF DRAWINGS.

1. Drawing Sheet Sizes
2. Legibility of Drawings
3. Projection
4. Scale
5. Machining Symbols

CHAPTER 2. DIMENSIONING OF DRAWINGS.

1. Dimensions to be used
2. Tolerances on Hole Centres
3. Dimensions of Proprietary Parts
4. Dimensions for Rivet Pitches

CHAPTER 3. DRAWING NUMBERING SYSTEM.

1. Aircraft Type
2. Variants of Aircraft Type
3. Component Letter
4. Part Number
5. Storeable Assemblies
6. N.D. Parts
7. Parts with listed variants
8. Auxiliary Services
9. Permanent Fixtures
10. Detachable Components
11. Continuation Sheets
12. General Arrangement
13. Assembly No. & Quantity on details.
14. Quantities on Assembly & GA Drgs.
15. Assembly & Schedule Table
16. Reference only numbers
17. "X" Numbers
18. "Z" Numbers
19. "J" Numbers
20. "R" Numbers

CHAPTER 4. DRAWING MODIFICATION SYSTEM.

1. General Note
2. Classification of Modification
3. Preparation of Modification
4. Marking of original drawings
5. Alteration to Drawing Numbers
6. Missing Issue Numbers
7. Amendments

CHAPTER 5. ISSUE OF DRAWINGS.

1. General
2. Production Issue
3. Experimental Issue
4. Castings & Forgings
5. Trial Installation on prototype.
6. Trial Installation on Prodn. A/C.
7. Drawings for a limited No. of A/C.
8. Cancellation of Experimental Drgs.
9. Office copies etc.

CHAPTER 6. DRAWING OFFICE DOCUMENTS.

1. Suspense & Release Notes
2. Advance Material Order Form
3. Drawing Office Instructions
4. Drawing Deviation Notes
5. Works Query Notes

CHAPTER 7. DRAWING OFFICE SERVICES.

1. Lofting Department (Full Scale Layout)
2. Drawings Library
3. Production Liaison
4. Standards Section
5. Protective Treatments.

# CHAPTER 1. PREPARATION OF DRAWINGS.

## 1. DRAWING SHEET SIZES.

All drawings for issue to the works are to be drawn on the standard printed sheets, stocks of which are maintained in each Drawing Office. The sizes of these sheets are as follows:-

| | | | |
|---|---|---|---|
| Size "A" | 10 " x 7½" | Size "E" | 40" x 15" |
| " "B" | 15" x 10" | " "F" | 40" x 27" |
| " "C" | 20" x 15" | " "H" | 53" x 30" |
| " "D" | 30" x 20" | (½" Border all round). | |

## 2. LEGIBILITY OF DRAWINGS.

To ensure the production of satisfactory, legible prints, drawings must be produced with bold, well-defined lines and lettering. Many draughtsmen use too hard a pencil, resulting in a very thin line which is lost on the relatively coarse-grained print paper. This is specially applicable in the case of "Sepia" prints taken from pencil drawings; areas which have been blanked out by the "Remover" become opaque and do not print well; additions or modifications over these areas should be made with a very dense pencil, i.e. "H.B." or "F" Grade.

## 3. PROJECTION.

The first angle method of projection is to be used, namely, that in which each view is so placed that it represents the side of the object remote from it in the adjacent view. See example below:-

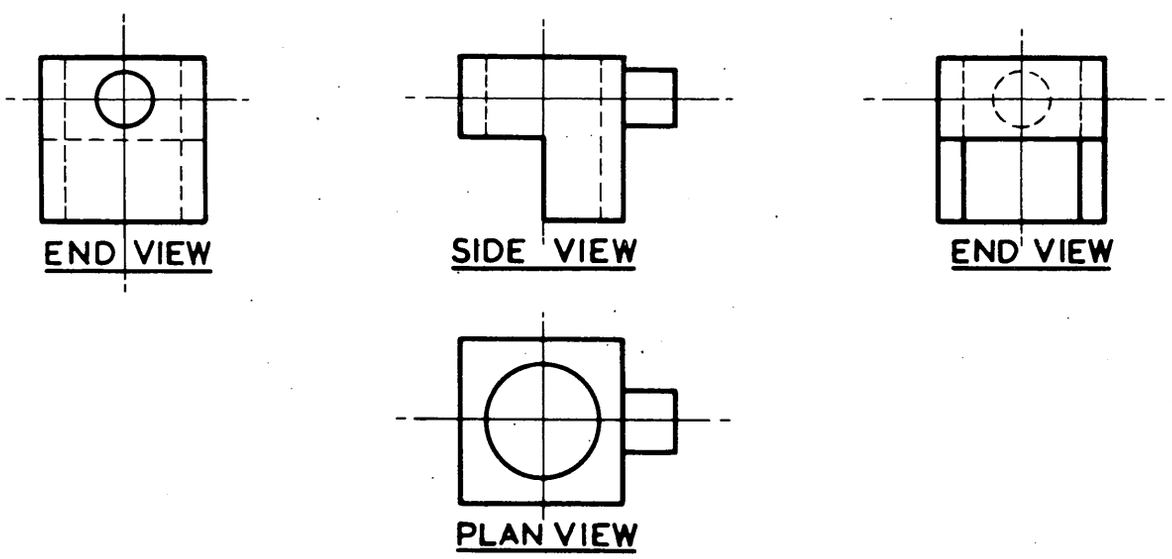


If, for special reasons, it is desired to use any method other than first angle, the drawing should clearly indicate the method by a note, or by arrows showing the direction of aspect of the various views in relation to each other.

When a section is drawn through a detail, the section line should be clearly defined with suitable arrows showing the direction in which the section is taken. Care must be observed in drawing either a "True Section" or a "View On." In each case, the drawing must clearly state which has been drawn. See examples below:-

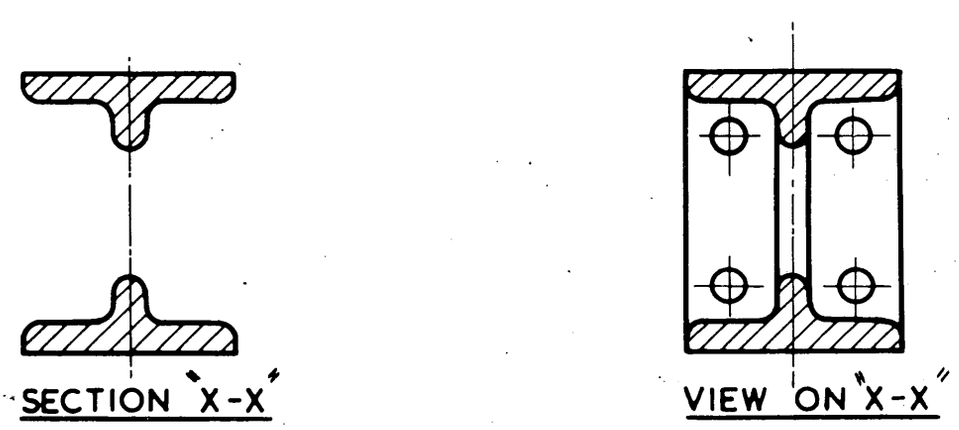

4. SCALE OF DRAWINGS.

Usual scales are twice full size, full size, half size, quarter and eighth full size. In special cases such as Aircraft General Arrangement Drawings, a convenient scale such as 1/12, 1/24, or 1/48 full size may be necessary. In all cases, excepting full size, the scale must be quoted in the bottom right hand corner of the drawing.

Wherever possible $\frac{1}{2}$ scale must be avoided for detail drawings.

The practice of marking "out of scale" dimensions with a black bar under the dimensions, should be avoided wherever possible and the drawing altered to the correct dimensions.

5. MACHINING SYMBOLS.

To conform to standard practice a machined finish should be indicated by a small triangle and not the symbol f as previously used. One point of the triangle should touch the surface defined or be related to it by a projection line.

Where a part is to be "Machined all over" one triangle with the appropriate note on the drawing sheet is sufficient.

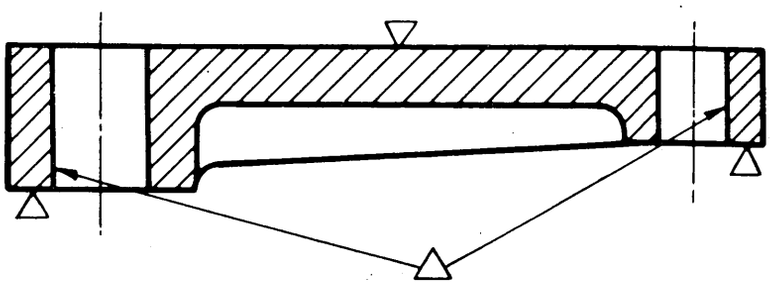

4. continued.

(b) "STAGGERED PITCH (OR PITCH STAGGERED) RIVETTING."

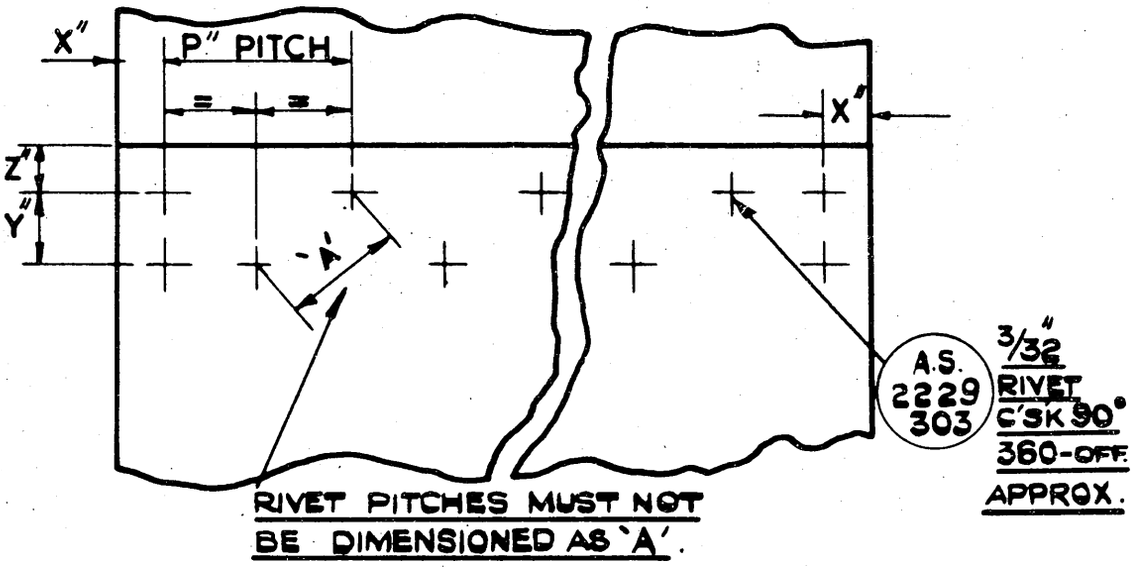


NOTE: The dimension given for 'P' must be maintained on long rivet runs, any adjustment necessary being made over the last 3 pitches. Dimensions X & Z must be given from a clearly defined datum and must also be given at the start of a change of pitch. The minimum centres of two rows of rivets that are not staggered or out of pitch locally should be 4 x Rivet Diameter. Material equivalent to 2 x Rivet Diameter should be maintained between rivets and edge of plate.

# CHAPTER 3. DRAWING NUMBERING SYSTEM.

## 1. AIRCRAFT TYPE.

The prefix figure of the Part Number will represent the Aircraft type and in the case of D.H.103 the figure 3 will be used, e.g.

| | | |
|---|---|---|
| (a) | 3.TE.1A | Elevator Assembly L.H. |
| (b) | 3-2 A.163 | Detail part of Armament peculiar to D.H.103 Mk.II. |
| (c) | 3.FS.245ND. | Gusset on Bulkhead |
| (d) | 3.TE.21 | Elevator Rib L.H. |
| (e) | 3.TE.22 | Elevator Rib R.H. |
| (f) | 3-2 WC.1A | Assy. of Centre Wing on D.H.103 MK.II. |

## 2. VARIANTS OF AIRCRAFT TYPE.

A separate series of drawing numbers will be used for parts peculiar to variants of the basic aircraft type. In the case of Civil Aircraft, these variants will be known as 'Type Numbers' e.g. 'Dove' Type 2, and for Military aircraft will be known as 'Mark Numbers' e.g. 'Hornet' Mark 21.

Drawing numbers for these variants will bear the Type or Mark Number - between the Basic Aircraft Type Number and the component letter, see example (b) above. Drawings introduced by a modification for several type or mark numbers should be numbered for the earliest type or mark number.

## 3. COMPONENT LETTER.

Components will be denoted by one or two letters (see list of Component Letters). The Component Letters will follow the aircraft type or Mark Number, as shown above. 10.

## 4. PART NUMBERS.

Figures following the Component Letters will represent the Part Number of Assemblies or Details used within the Component. All non-handed and L.H. parts to be given <u>odd Part Numbers</u>, e.g. (a) (b) (c) and (d) above. Even numbers must only be used for R.H. Parts. The even number must always be consecutive to the number of the L.H. Part, e.g. (d) and (e) above.

Drawings must state which hand is drawn. (This should invariably be left hand).

## 5. STORABLE ASSEMBLIES.

All Assembly Numbers of storable units and components, i.e. Elevators, Electrical Junction Box, completed fittings made up from several detail parts, etc., will have the suffix letter "A", e.g. (a) above.

## 6. N.D. PARTS.

An 'N.D.' suffix shall be added to all Part Numbers which are fully dimensioned on Assembly Drawings, but not detailed on separate sheets. See example in paragraph 1. (c).

(1) All N.D. parts shown on drawings must have <u>Issue No.</u> printed beside the part number immediately outside the balloon, together with the Protective Treatment symbol.

## IDENTIFICATION OF UNITS AND COMPONENTS.

| Letter. | Unit or Component. |
|---|---|
| A | Armament: Gun and Bomb Installations. Bomb Release Gear. Gun Heating. |
| B | Bonding: |
| CE | Controls: Engine (in Cockpit, Wings and Engine Nacelles.) |
| CF | Controls: Flying (in Fuselage? Wings and Tail Unit, including Trimming Tab and Aileron Differential mechanisms, etc.) |
| D | Deck Landing & Accelerating Gear: |
| E | Engine Installation: General, i.e. Layout, Mounting of Accessories, Firescreen etc. |
| EC | Cowling. - Air Ducts & Trunks. |
| EE | Exhaust System. |
| EM | Engine Mtg. (Structure only). |
| ER | Coolant System (Inc. Header Tank, Radiators, Piping.) |
| F | Fuselage Assembly. (including Instrument Boards, Cockpit Seating). |
| FC | Canopy. |
| FS | Structure (Shell, Bulkheads, Doors, Flooring, etc.) |
| FF | Cabin Furnishings. (Seating, Upholstery, Lavatories, Racks.) |
| G | General: G.A. of Aircraft, also loose details called up thereon. Paint finishing schemes etc. |
| H | ---- ---- ---- |
| K | ---- ---- ---- |
| L | Oil System: General Installation. |
| LT | " " Tanks. |
| M | Miscellaneous Equipment: i.e. Chart Table, Camera Installation, First Aid Stowage, Safety Harness, Fire Extinguisher (Hand and Automatic) Dinghy Installation, Camera Gun Installation, Control Locking Gear. |

| Letter. | Unit or Component. |
|---|---|
| N | Electrical Installation. |
| P | Fuel System: General i.e. Piping, Fuel Cooler, etc. |
| PT | Tanks. |
| Q | ------ |
| R | Radio: |
| S | Services: Hydraulics, (Oxygen, De-icing, Pneumatics, Vacuum, System and Tank Vent Pipes, and Water Tanks.) |
| T | Tail Unit Assembly. |
| TB | Tail Booms. |
| TE | Elevator. |
| TF | Fin. |
| TR | Rudder. |
| TP | Tailplane. |
| U | Undercarriage (Main) |
| UT | Tail Wheel Unit. |
| UN | Nose Wheel Unit. |
| V | Ventilation and Cabin Heating. |
| W | Wing Assembly Complete: (Also all details and Sub-Assemblies if Wing be designed in one piece.) |
| WC | Centre Portion & Stub Plane ) All details, Sub-Assemblies, & Component Assembly. |
| WE | Extension Plane ) |
| WA | Ailerons, or Elevons. |
| WB | Dive Brakes. |
| WF | Flaps. |
| WS | Slats. |
| X | Preliminary G.A.'s and Schemes, Wind Tunnel Model drawings, Mockups and Drawings for special Test work, e.g. Fuel Test Rig, Hydraulic Test Rig, Tail Parachute, etc. (See Para. 17.) |
| Y | Ground Equipment: (for Service Use) Interchangeability Data Sheets. |
| Z | Trial Installations and Modification Conversion Drawings. (See Para. 18.) |

6. continued.

(2) For subsequent design changes which do not affect interchangeability safety or functioning, the issue number of the N.D. detail affected will be raised.

(3) For subsequent design changes which do affect interchangeability, safety or functioning, the N.D. detail affected must be given a new 'N.D.' part number.

(4) Changes under paragraphs 2 and 3 above will also raise the issue number of the drawing on which the N.D. part is shown. If several N.D. parts on one drawing are raised in issue by the same modification, it is only necessary to raise the issue of the drawing on which the N.D. parts are shown, by one issue.

(5) An N.D. part is frequently shown on 2 or more assembly drawings and when raising the issue of an N.D. detail, reference must be made to the N.D. list to ensure that all relevant assembly drawings are altered to agree.

(6) If a part previously 'N.D.' is fully detailed without modification, the new drawing will bear the same Part and Issue Number as it was 'N.D.' If modified section (2) & (3) still apply.

(7) When a detail drawing of a Casting or Forging is made into an Assembly drawing by the addition of parts such as Bushes. The Casting or Forging will retain its original Part Number 'N.D.' with its Issue Number raised. The new Assembly drawing will take a new number, Issue 1.

(8) Each separate detachable length of pipe in Hydraulic, Oxygen, etc., services will have an 'N.D.' number, which will include nuts, collars and any part which is not removable when the pipe ends are belled. No 'N.D.' number will be given to the basic pipe. 12.

(9) Where an 'N.D.' detail is required on more than one Assembly drawing it must be fully dimensioned in every case. (See also section (5) above). First consideration however, should be given to making it a separate detail drawing.

7. PARTS WITH LISTED VARIANTS.

When parts of varying size are drawn with a table of dimensions a column for issue numbers must be provided in the table between the part number and dimension columns. This enables the issue number of one single part to be raised when necessary and avoids the necessity of altering issue numbers on the stock and tools of the variants.

8. AUXILIARY SERVICES.

Part Numbers for details and assemblies of Auxiliary Services which extend throughout the aircraft, i.e. Hydraulic, Electrical Installation, Flying Controls, etc., will bear the appropriate Services Unit or Component letter; Thus all detail part numbers of Flying Controls whether in Wing, Fuselage or Tail, will have the Unit identification "C.F.".

A Pulley Bracket which may be bolted to Spar in Wing to take Flying Control Cables will have "C.F." Unit Letters, but will be called for on the Wing Structure Assembly Drawings. Such parts will be grouped at the end of the Wing Structure Schedule.

9. PERMANENT FIXTURES.

Example, Wooden Block glued to Structure, to mount Control Bracket previously mentioned, will have Component letter "W". All general services parts which are loose until final assembly, or parts which are easily assembled after the main structure has been completed, will be called for on the relevant Services Arrangement Drawing.

Thus Control Cables in Wing will appear on the Arrangement of Controls in Wing, which will have a "CF" drawing number. This arrangement drawing will, in turn, be called for on the Wing Assembly Drawing.

10. DETACHABLE COMPONENTS.

Separate Arrangement Drawings are to be prepared for all Services in major detachable components, i.e. the following arrangements drawings will be required for Electrical Installation.

(a) Arrangement of Electrical Installation in Wing.
(b) " " " " " Fuselage.
(c) " " " " " Power Unit.

Similarly, where any part of an auxiliary service is fixed to a small detachable component, a separate arrangement drawing is required. e.g. An electrical conduit on a power plant cowling. Such an arrangement drawings must be called up on the G.A. of the component to which they are attached or the case arises where the Power Plant cowling above becomes an Electrical Assembly.

Key diagrams of complete Hydraulic, Electrical Services and Flying Control, etc. will be drawn for reference only. Detail Part Numbers must not be called up on these diagrams, as this information must be obtained from the relevant services arrangement drawing for each Component.

11. CONTINUATION SHEETS.

All drawing continuation sheets must be given independent numbers and not Sheet Numbers of the Main Drawing.

12. GENERAL ARRANGEMENT.

The General Arrangement or Key Assembly Number for each unit or Component must be number 1 in each series.

e.g. for D.H.103 - Rudder 3. TR.1A
D.H.103 Mk.2 - Rudder 3-2 TR.1A (Only if Rudder is different to Mk.1.)

13.

Fuselage Assembly (complete) 3.F 1A
or for D.H.103 Mk.2 3-2F.1A

This principle may be extended, as for example the Electrical Services, for which the first series of numbers are to be used consistently as follows for each new design.

| | |
|---|---|
| Key Diagram & G.A. of Electrics | 6N.1 |
| Theoretical Diagrams | 6N.3 |
| Routing Charts | 6N.5 |
| Equipment Lists (for Military A/C. See Appendix A) | 6N.7 |
| Cable Assembly Lists | 6N.9 |
| Loading Chart Supply | 6N.11 |
| Loading Chart Earth | 6N.13 |
| Diagram of Earth Terminals | 6N.15 |
| Block Diagram of Connector Groups | 6N.17 |

13. ASSEMBLEY NUMBER & QUANTITIES ON DETAILS.

All drawings, except drawings of standard sections and D.H.S. parts, must, before issue, have the number of the drawing on which they are assembled, quoted in the "Assembly No." column and the quantity required per m/c. in the "No. Off" column in the bottom R.H. corner of the drawing sheet.

It is emphasised that this quantity must be the total number per m/c for the particular assembly - not the number per assembly. If the quantity of any assembly is, for some reason, increased particular care must be taken to see that all detail parts of that assembly have the No. off per M/C altered accordingly.

14. QUANTITIES ON ASSEMBLEY & G.A. DRAWINGS.

On Assembly and G.A. Drawings, quantities of detail parts (i.e. parts for which separate drawings exist) are not to be quoted against the balloon references except in the case of complicated assemblies where confusion might occur if this information were omitted. Quantities of standard parts, nuts, bolts, pins, etc., must be given. Where quantities are given against the balloon reference, the No. off should be that required to make one assembly, even though two or more assemblies may be required per M/C, e.g. on a handed assembly, the number of "non-handed" parts called for should be enough to make 1-off for one hand only.

15. ASSEMBLY & SCHEDULE TABLE.

The "Assembly and Schedule Table" on drawings covering two or more detail parts must not be used to denote dimensional or other differences between these parts. A separate table must always be made on the drawing for this purpose.

16. REFERENCE ONLY NUMBERS.

"Reference Only" drawing numbers must not be ballooned, but should be given in note form.

17. 'X' NUMBERS.

"X" Numbers must not be used for Production drawings.

18. 'Z' NUMBERS.

"Z" Drawing Numbers which show the method of altering existing storable components must have the following note added in the bottom right hand corner:- 14.

"When Part Number 13A.155" (i.e. existing production number) is altered as shown above, the part must be renumbered" [illegible]" (this number to be the same as the new production assembly number.

The new production drawing must also have a note added as follows:-

"For methods of altering existing Part Number..13A.155... to comply with this drawing see Drawing No.Z.15-13.47....."

The original drawing must have a note added:-

"This drawing is modified see Drawing No. Z....."

19. "J" NUMBERS.

Drawings of standard sections are allocated "J" numbers and are issued by the Standards Section only, a register of "J" numbers is retained by the Standards Section.

20. "R" NUMBERS.

Repair Schemes have a prefix "R" before the aircraft Type Number, e.g. R.3. TE.6 Repair to HORNET Elevator.

# REVISED CLASSIFICATION FOR DE HAVILLAND MODIFICATIONS

| D.H. CLASS | M.O.S. CLASS: AT CONTRACTORS WORKS | M.O.S. CLASS: FOR RETROSPECTIVE ACTION | CLASSIFICATION FOR CIVIL OPERATORS | TYPE OF CHANGE | EMBODIMENT AT FACTORY: CIVIL | EMBODIMENT AT FACTORY: SERVICE A/C | RETROSPECTIVE ACTION: CIVIL | RETROSPECTIVE ACTION: SERVICE A/C |
|---|---|---|---|---|---|---|---|---|
| | | | THE MANDATORY CLASSIFICATION FOR OPERATORS WILL ONLY BE USED BY AGREEMENT WITH THE **A.R.B.** THE CLASSIFICATION FOR OPERATORS WILL ONLY BE USED ON MODIFICATION LEAFLETS & THE SERVICE DEPT MOD INDICES & WILL NOT BE USED ON MOD. SHEETS. | | | | | |
| 1 | A | A | NOT APPLICABLE | ESSENTIAL BEFORE RELEASE OF NEW TYPE OR MARK OF A/C TO SERVICE | NOT APPLICABLE | COMPULSORY BEFORE DELIVERY EVEN THOUGH DELAY IS INVOLVED | NOT APPLICABLE | NIL |
| 1 | A | 1 | MANDATORY | ESSENTIAL FOR SAFETY | COMPULSORY BEFORE DELIVERY EVEN THOUGH DELAY IS INVOLVED. | | COMPULSORY & IMMEDIATE | |
| 2 A | - | - | | URGENT OPERATIONAL REQUIREMENT | COMPULSORY AS SOON AS NEW PARTS ARE AVAILABLE EXISTING PARTS MUST BE MODIFIED OR REPLACED. **SPARES.** NEW OR MODIFIED PARTS TO BE MADE AVAILABLE AS SOON AS POSSIBLE THE PRE MOD PARTS MAY HAVE TO REMAIN AVAILABLE FOR A/C. NOT MODIFIED TO THE LATEST STANDARD AND ALSO BE SUPPLIED PENDING AVAILABILITY OF NEW PARTS, WHICH HAVE BEEN ORDERED | | COMPULSORY AT A DATE AGREED WITH THE **A.R.B.** | |
| 2 A | B | 2 | DESIRABLE | IMPORTANT OPERATIONAL REQUIREMENT | | COMPULSORY AS SOON AS PARTS ARE AVAILABLE. EXISTING PARTS TO BE MODIFIED OR REPLACED. | RECOMMENDED AS SOON AS POSSIBLE | AS SOON AS MODS. SETS CAN BE MADE AVAILABLE |
| 2 B | - | - | OPTIONAL | MINOR OPERATIONAL IMPROVEMENT | AT A CONVENIENT STAGE ON THE PRODUCTION LINE, IMMEDIATELY PARTS BECOME AVAILABLE. **SPARES.** SAME AS (2A) ABOVE | NIL | ONLY BY ARRANGEMENT WITH OPERATOR | NIL |
| 3 A | C | 3 | | DESIGN IMPROVEMENT | TO BE EMBODIED ON ALL PARTS IN STORES | AS EARLY AS POSSIBLE, EXISTING PARTS TO BE MODIFIED OR REPLACED BUT NO DELAY IN DELIVERY OF AIRCRAFT | | AS SOON AS MOD. SETS ARE AVAILABLE, NOT LATER THAN THE NEXT MAJOR INSPECTION |
| 3 B | D | 4 | INFORMATION | DESIGN IMPROVEMENT **NOT** AFFECTING *INTERCHANGEABILITY | AS EARLY AS CONVENIENT WITHOUT SCRAP OR DELAY IN DELIVERY OF AIRCRAFT. | | NIL | NIL. EXISTING SPARES TO BE USED UP. |
| | D | O | | DESIGN IMPROVEMENT WHICH **AFFECTS** *INTERCHANGEABILITY | | | NIL | NIL. PRE MOD. AND POST MOD. SPARES ARE TO BE PROVISIONED |
| S.O.O. | S.O.O. | | | SPECIAL ORDER REQUIREMENT | — | | — | — |

* DEFINITION OF INTERCHANGEABILITY AFFECTED:- 1. DIMENSIONALLY 2. PHYSICAL (STRENGTH) 3. FUNCTIONING 4. SPARES.

N.B. THE MOS. CLASSES SHOWN ABOVE ARE THOSE MOST FREQUENTLY USED. THE LETTERS & FIGURES CAN BE PERMUTATED, DEPENDANT UPON THE URGENCY AT CONTRACTORS WORKS & IN SERVICE TO PROVIDE REQUIRED PRIORITY. e.g. 1. A MOD THAT IS REQUIRED "IMMEDIATELY" IN NEW PROD^N A/C BUT WITH NO RETROSPECTIVE APPLICATION WILL BE CLASSED A4. 2. A MOD THAT IS REQUIRED "URGENTLY" IN NEW PRODUCTION A/C BUT WITH NO RETROSPECTIVE APPLICATION WILL BE CLASSIFIED B/O OR B/4.

M. 6137

APRIL 1956

IMPORTANT! THIS DOCUMENT MUST NOT BE ISSUED TO ANYONE OUTSIDE THE DE HAVILLAND AIRCRAFT COMPANY ORGANISATION WITHOUT THE AUTHORITY OF THE DESIGNER IN CHARGE OF DEVELOPMENT

## CLASSIFICATION OF MODIFICATIONS ON DRAWINGS.

### PRIOR TO THE INTRODUCTION OF FULL MODIFICATION PROCEDURE.

It is the practice in the Drawing Offices to give a Mod. classification to raised issues of drawings for the guidance of the Engineering Offices and Production Control.

It is important to realize that the only classifications that can be used are as follows:-

Class 2. Implying compulsory action as soon as possible. With scrap. (issue D.O.I. if modification of details can save scrap.)

Class 3A. Implying modification as soon as possible without delay in Aircraft programme. Scrap permitted. (issue D.O.I. if modification of details can save scrap.)

Class 3B. Implying modification as soon as convenient (e.g. when existing batch of details is used up or a tool change is desirable etc.)

Certain drawings have been issued quoting Class 2A or 2B. This implies that retrospective action, because of Interchangeability Safety or Functioning, had been considered thereby making it a definite case for a written mod.

Class 2A or 2B must not therefore be used without a written mod.

Written modifications are required in the following cases if any aircraft of the Type No. affected has been delivered or is in a pre-delivery condition, or, if there are to be any differences in the mod. standard of the aircraft still on the production line.

15A. (i) Any Classification where Interchangeability Safety or Functioning are affected.

(ii

(ii) Mods to, or introduction of, any Equipment that requires A.R.B. or A.I.D. approval.

(iii) Mods to, or introduction of, any Equipment requested by Customer. (This is to record in the Log Book, any change from the standard Aeroplane.)

Where written modifications are required the drawings must not be issued until the Development D.O. have provided a Mod. No. to go on the drawings, after which all subsequent alterations must be recorded on that Modification sheet until the drawings and mod are issued.

When issuing design alterations as Class 2 the detail and assembly part numbers affected must be changed as laid down in the D.O. Handbook Chapter 4 Para. 5.

In certain special cases (e.g. when only the prototype aircraft parts exist) this rule may be waived but only by agreement with the Assistant Designer in charge.

Class 1 modifications must not be issued without the approval of the Chief Designer. Lower Classifications must be approved by the Designer I/C.

# CHAPTER 4. DRAWING MODIFICATION SYSTEM.

GENERAL NOTE.

PLEASE REMEMBER THAT WHAT MIGHT APPEAR TO YOU AS A "MINOR" MODIFICATION TO A DETAIL, INVARIABLY MEANS THE SCRAPPING OF EXPENSIVE TOOLS AND TEMPLATES.

It should be realised that the modification procedure will vary for Civil or Military aircraft according to circumstances. Reference should be made to the current instructions issued for the particular aircraft, the drawings of which are to be modified.

The following instructions are, however, applicable to all types.

2. CLASSIFICATION OF MODIFICATIONS.

The classification of modifications applicable to de Havilland Aircraft are given on M.6137 opposite.

3. PREPARATION OF MODIFICATIONS.

(1) The modification is to be written in the following order:-

New Drawings
Cancelled Drawings
Modified Details
Modified Sub-assemblies
Modified G.A.'s.

(2) The grid system should be used, e.g. Position 18L. The note "....." has been changed from "....."

16. (3) In the description, the alteration should be quoted to ..... from..... e.g. dimension .7" was .6", or dimension altered to .7" from .6".

(4) The description should be confined to the bare alteration and not confused with the reason, which should be stated clearly below in the space provided, as the reason for doing the job and not a summary of what has been done.

(5) Works Query Note references, etc. should be quoted.

(6) When assembly references and numbers off are affected by an alteration to a G.A. or assembly, do not forget to modify the detail drawings.

(7) If existing parts are scrapped by the modification, but can be altered to make them usable, issue a D.O.I. for this purpose and quote the number on the modification sheet, e.g. "Existing parts may be modified as shown on D.O.I....." See also paragraph 9.3.

(8) D.O.I's which have been issued for advanced information should be quoted in the superseded column, and stamped with the "Incorporated" stamp.

(9) Drawings affected by the modification, but altered by amendment action must be referenced on the modification. In the description column state as follows:- "Drawing No.'s..... altered by Amendment List No....." See Paragraph 9.7 for details of Amendment Procedure

4. MARKING UP OF ORIGINAL DRAWINGS.

When a modification is made to the master drawing, (linen, paper, or Ozalid) the alteration must be ringed round in yellow pencil. Thus every print taken from the drawing will indicate the latest modification. Red or Blue pencils must not be used as they do not print. When further modification is required, the draughtsman will first remove the existing yellow markings, carry out the new alteration and then ring round the

4. continued.

new modification in yellow. Linen tracings are to be marked on the front face, i.e. the matt surface, paper drawings and "Ozalid" are to be marked up on the rear face.

When making new drawings which are based on an existing drawing, especially in the case of altered sepia prints, care must be observed that obsolescent references and specifications are not perpetuated.

5. ALTERATION TO DRAWING NUMBERS.

When a modification is made to a part which affects INTERCHANGEABILITY, SAFETY or FUNCTIONING, the drawing number of the modified part <u>must be changed</u>.

Detail parts are to be given an entirely new part number and will revert to issue 1.

Storable assemblies will have a stroke number added after the existing Part Number and the issue of the Drawing raised. For example:- a fitting Part Number, 4.FS.234 Assembled on Bulkhead 4.FS.678A is unsuitable, has been re-designed and in its modified form is Non-interchangeable. The following Part Numbering changes must therefore be made:-

Fitting) Part Number prior to modification - 4.FS.234 Issue 3.
) Part number after modification - 4FFS.999 Issue 1.

Bulkhead) Part Number prior to modification - 4.FS.678A Issue 2.
) Part number after modification - 4.FS.678A/1 Issue 3.

It should be clearly understood that the addition of a stroke number at the end of a part number i.e. 4.FS.678/A/1 or the raising of a stroke number i.e. 4.FS.678/A/1 raised to 4.FS.678/A/2 is the 17.
equivalent to allocating an entirely new part number.

It is therefore most important that a copy of the drawing (preferably a transparent copy) be taken before the alterations are made to the Master Tracing i.e. before the addition of stroke numbers.

This copy should be marked "This drawing will not be required when Mod. No.--- is introduced" or "Cancelled" as appropriate and returned to the Drawings Library.

General Assemblies and Arrangementsdrawings will be modified to call up the new storable assembly and the issue raised, but the Part Number will be unaltered. In the example above, if the Bulkhead, 4.FS.678A was called up on General Arrangement of Fuselage 4.FS.1A. then this G.A. drawing would be altered to call up 4.FS.678/A/1 and raised in issue, but its number would remain 4.FS.1A.

Subsequent modifications which affect Interchangeability, Safety or Functioning will again raise the stroke number. In the case of the example above, the part number would become 4.FS.678/A/2 and the issue raised to 4.

Subsequent modifications which <u>do not</u> affect Interchangeability Safety or Functioning, the drawing issue number <u>only</u> will be raised, the stroke number remaining unaltered.

Drawing numbers which have been changed by the addition of a stroke number must also be altered on their respective assembly drawings, but all assembly number references on detail drawings required to make the assembly to which the stroke number is added, need not be changed.

6. "MISSING" ISSUE NUMBERS.

It is confusing for production personnel when they receive drawings with a jump in Issue numbers. In one example they had received Issue 5 and then Issue 8. It was found that the draughtsman had put

6. continued.

on an alteration to Issue 6, another draughtsman an alteration to Issue 7 and neither of these had been issued. This causes considerable inconvenience to the Engineering Dept., as Issue 8 only was ringed up to show the modification, the ring markings for Issues 6 and 7 being omitted. There is also confusion in the print distribution department over missing issues. When a modification is made to a drawing the issue number must be raised and the drawing issued. In the case of drawings on experimental issue however, when two or more draughtsmen require to alter the same drawing, it can be done under the same issue number by mutual arrangement. Care must be taken to see that each modification is correctly ringed and entered in the issue column before the drawing is issued by the draughtsman making the final alteration.

7. AMENDMENTS. (Not applicable to Experimental Aircraft).

A large number of drawing alterations of a minor character can be carried out by Amendment Action; generally such alterations are of minor importance and if they are overlooked or not acted upon the production departments would not be inconvenienced or the design of the components prejudiced. This does not mean that small alterations can be ignored by the Drawing Office. The procedure in these cases is to make the necessary alteration to the Master Tracing and give a description and/or an illustration of the modification on the current Amendment List. The issue of the Master Tracing is NOT raised, but the number of the Amendment List is entered in the Amendment List Column on the extreme left hand side of the drawing.

As the Amendment List only is issued and not the drawing, a considerable saving in prints can be effected.

The following alterations may be covered by Amendment Action:-

18.

(1) Schedule corrections
(2) Schedule references on drawings
(3) Assembly numbers
(4) Addition or deletion of unimportant notes.
(5) Pictorial corrections
(6) Minor dimensional corrections, not affecting strength interchangeability or tools.
(7) Improved method of dimensioning, which do not materially alter part.
(8) Deletion of Redundant Dimensions
(9) Part Number corrections on Assembly Drawings (not alterations brought about by modifications, e.g. tracers' errors).
(10) Reduction in numbers off. (Discretion to be used in cases of parts fabricated by ourselves).
(11) Correction of Rivet Lengths.

The following must <u>not</u> be altered by Amendment:-

(1) Changing of material specification.
(2) Part Numbers - the addition to, or deletion from an assembly drawing.
(3) Increase in number off.
(4) Addition of Tooling Holes.
(5) Stroke numbers added to balloon references.

## CHAPTER 5. ISSUE OF DRAWINGS.

1. GENERAL.

Before the first issue, all drawings must have design approval. The Print Room will not accept drawings without the authorised signature of the Assistant Designer in charge of the unit or aircraft, who must also initial the 'Checked' column before second and subsequent issues.

Alterations for each issue must be ringed round in YELLOW pencil on the underside of the paper drawings and on the front of the linen tracings. See note re issue numbers (Chapter 4. Para.6.)

2. PRODUCTION ISSUES.

Drawings for full production must be listed on a BLUE print requisition and handed to the Drawings Library assistant who despatches them to the Print Issue department. These drawings are then distributed to the production departments concerned with the particular aircraft and to any persons listed on the record cards as holding copies of the earlier issue of these drawings.

3. EXPERIMENTAL ISSUES.

Drawings from the Experimental D.O's. for Prototype Aircraft or Major Design Developments must be examined and approxed by Mr.A.T.Cross after receiving Design Approval but BEFORE ISSUE.

A WHITE print requisition is then completed for the drawings to be issued, with a bold note "EXPERIMENTAL ISSUE". The Print Distribution department will then forward copies to those people indicated on the "Issue of Drawings" instruction for the relevant type.

After printing, the originals will be returned to the person signing the requisition. 19.

4. CASTINGS & FORGINGS.

Drawings of Castings and Forgings must be noted on the print requisition so that additional copies required by the Experimental Buying Office are allocated. (For full procedure see Section II).

5. TRIAL INSTALLATIONS ON PROTOTYPE AIRCRAFT.

Where it is inadvisable to issue a drawing until a Trial Installation has been proved satisfactory, the words TRIAL INSTALLATION PROTOTYPE ONLY _ SEE SUSPENSE NOTE, No....." are to be pencilled in large letters on the drawing before issue.

Concurrently with the drawing issue, a Suspense Note must be issued stating that the drawings affected are to be suspended after 1st. aircraft. When the Trial Installation is approved, the note is to be removed from the drawings, the issue raised and the drawings re-issued as "Full Issue" together with the Release Note.

6. TRIAL INSTALLATION ON PRODUCTION AIRCRAFT.

Drawings are issued in conjunction with a T.I. Form and must bear the note 'TRIAL INSTALLATION ONLY". "T.I." NO....." When the Trial Installation is approved, the note is deleted from the original drawing, the issue number raised and issued on production.

7. DRAWINGS FOR A LIMITED NUMBER OF AIRCRAFT.

When a drawing is issued to cover one, or a particular number of aircraft it must bear the production numbers of the aircraft affected. e.g. M/C.6002 to 6005. (Note. NOT 'Second Production Aircraft' etc.) In such cases a Suspense Note is not required. Where applicable it is helpful to state the Production drawing numbers. e.g. PROTOTYPE ONLY. FOR PRODN. SEE DRAWING .....

8. CANCELLATION OF EXPERIMENTAL DRAWINGS.

When drawings have been issued with a Suspense Note, the Release Note is issued stating the drawings cancelled and the drawing is marked in Red Pencil 'CANCELLED'.

If a redesign of any component cancels a drawing which has been issued in the ordinary way without a Suspense Note, then a Suspense and Release Note must be made out to cancel it.

9. OFFICE COPIES ETC.

Prints have, in the past, been obtained by filling in a print slip for 'Office Copies Only', and have been used for the following purposes:-

(a) Amassing a private collection
(b) Passing them to individuals in the Shops direct.
(c) Sending them to outside Firms, etc. (usually with a letter)
(d) For real use within the office, (e.g. where the drawing is a key one and several people require it at the same time).

There have been occasions when the Drawings Library have been unable to prove that a drawing has been sent to the Shops or the outside Firm, simply because their record cards say "2 off Office Copies". All print slips for special issue must be White and must state their ultimate destination, e.g. regarding the above:-

(a) & (b) Not permitted.
(c) The print slip should state "2 off Rolls-Royce to accompany letter, or "3 off M.A.P. to accompany letter, or "2 off Mr. Long for ordering," and so on.
The prints are to be returned with original to the person who made out the print slip.
20. (d) The print slip should state:- "1-off - D.O. Use".

It is permissible for original sketches for urgent mock-up purposes or layouts for Stress Office to be handed direct to the Department concerned, without numbering. If, however, the drawing has to be printed, it must be given a proper drawing number and handed in with a White print stating "1-off for Mock-up Room only," or "1-off for Stress Office Only".

# CHAPTER 6. DRAWING OFFICE DOCUMENTS.

## 1. SUSPENSE AND RELEASE NOTES.

The object of the Suspense and Release Note System is to provide a rapid means of stopping the manufacture of parts which are either to be scrapped or extensively modified as shown in Example 1.

In addition, the Suspense System is used when "N.D." Parts are transferred from one drawing to another. Such changes may be the result of a Production Request to suit an operation schedule. Example No.2 Illustrates the method to be adhered to:-

On experimental work for Prototype Aircraft the Suspense Note System is also used to issue a Trial Installation. (See Chap.5 Para.5.)

A Suspense Note is treated as a very urgent item by the recipients who take immediate action on its instructions. Waiting to re-draw or modify a part is not quick enough, as apart from the time taken to modify the drawing, each drawing takes its turn in the various departments con-concerned, i.e. Printing, Issue, Production Engineers, etc. and valuable time, material and labour may be wasted if a Suspense Note has not been issued promptly.

When writing Suspense Notes the instructions given on the front of each Suspense Book must be carefully observed.

When the aircraft type passes to the Production stage, care should be observed that Suspense Notes which are not directly applicable to the Prototype Aircraft are not issued to the Experimental Department.
Suspense Notes are not to be issued without the words:-
"SEE SUSPENSE NOTE NO....." being printed in bold letters on the original drawing.

Particular care must be observed with regard to "ND" parts when suspending G.A.'s or assembly drawings. It is important that all 'N.D.' Numbers, are fully listed.

Release Notes should also be compiled with special attention to N.D. numbers. Frequently a new drawing will be released to issue 1, replacing a Suspended drawing. The new drawing may be only a modified form of the Suspended drawing and will, therefore, call up a number of "N.D." parts used on the previous drawing. In these cases the Release Note must list the common "ND" parts and also the "ND" parts which are definitely cancelled. See example Release Note No.1 for details:-

DO NOT WITHOLD INFORMATION FROM EITHER SUSPENSE OR RELEASE NOTES.

If a new drawing replaces a suspended one, say so on the Release Note.
e.g. 3.CF.2000A. Issue 1 Control Column,
replaces 3.CF.1000A Issue 6.

Similarly, if a drawing is definitely cancelled on the Release Note and, there is no replacement, a note to this effect should appear alongside the drawing number.

If there is insufficient room on one sheet for all the drawings concerned, use the next consecutive numbered form and not pieces of paper or private duplicate books.

*To* AS ON SUSPENSE NOTE RELEASE NOTE

M/c Type D.H. 105

Component REAR FUSELAGE FRAME 17

*Work may be recommenced to the following Drawings :—*

| Part No. | New Issue | Description |
|---|---|---|
| 5.FS.313A | 1 | FRAME Nº 17 REPLACES 5.FS.101A ON A/C 5003 |
| THE FOLLOWING 'ND' PARTS ON 5.FS.101A ARE REQUIRED ON 5.FS.313A. | | |
| 5.FS.113ND | 2 | WEB PLATE |
| " 127ND | 1 | DOUBLING PLATE |

*The following Drgs. are *not required for Prodn./*~~Cancelled.~~*

| | |
|---|---|
| 5.FS.101A | 5.FS.103 ND. |
| | " 105 ND. |
| | " 109 ND. |
| | " 111 ND. |

*Signed* READABLE SIG. *Dept.* PROD. DO *Date* 20-9-50

Form No. 751B C.P. 70940 INITIALLED BY DESIGNER 1/C

*To* NAMES GIVEN ON FRONT OF SUSPENSE NOTE BOOKS. SUSPENSE NOTE EXAMPLE Nº 1.

M/c Type D.H. 105

A/c affected 5003 & SUBSEQUENT

Component REAR FUSELAGE FRAME 17

*Suspend work on :* (1) *Lofting. (2) *Materials. (3) *Jigs and Tools. (4) *Operations.

* Delete as necessary.

| Part No. | Description |
|---|---|
| 5FS 101A | FRAME Nº 17 INCLUDING :- |
| 5FS 103ND | GUSSET |
| " 105ND | BRACKET |
| " 109 ND | GUSSET |
| " 111 ND | CHANNEL |
| " 113 ND | WEB PLATE |
| " 127 ND | DOUBLING PLATE. |

*Reason :* FRAME No 17 TO BE REDESIGNED TO INCORPORATE ADDITIONAL OXYGEN BOTTLE STOWAGE.

*Signed* READABLE SIG. *Dept.* EXP. DO *Date* 1-8-50

INITIALLED BY DESIGNER 1/C

22.

*To* RELEASE NOTE ISSUED WITH SUSPENSE NOTE

M/c Type D.H. 105.

Component INSTRUMENT PANEL MTG.

*Work may be recommenced to the following Drawings :—*

| Part No. | New Issue | Description |
|---|---|---|
| 5F 947ND | 1 | NOW CALLED UP ON 5 F 962 A. ISS. 3. |
| 5F 963ND | 1 | |

*The following Drgs. are *not required for Prodn./*Cancelled.*

*Signed* READABLE SIG. *Dept.* PROD. DO *Date* 2-9-50

Form No. 751B. C.P. 70940 INITIALLED BY DESIGNER 1/C

*To* NAMES GIVEN ON FRONT OF SUSPENSE NOTE BOOKS. SUSPENSE NOTE EXAMPLE Nº 2.

M/c Type D.H. 105

A/c affected NONE AFFECTED

Component INSTRUMENT PANEL MTG.

*Suspend work on :* ~~(1) *Lofting.~~ ~~(2) *Materials.~~ ~~(3) *Jigs and Tools.~~ (4) *Operations.

* Delete as necessary.

| Part No. | Description |
|---|---|
| 5 F 947 ND | CALLED FOR ON 5 F 123A ARE TO BE TRANSFERRED TO 5F962A |
| 5 F 963 ND | |

*Reason :* TRANSFERRED TO PERMIT ASSY. IN DETAIL STAGE.

*Signed* READABLE SIG. *Dept.* PROD. DO *Date* 2-9-50

INITIALLED BY DESIGNER 1/C

## 2. ADVANCE ORDERING OF MATERIAL FOR PROTOTYPE AIRCRAFT.

It is of the utmost importance that early notification be issued regarding prototype material requirements, e.g. extra large sheets, Tubing, Extrusions, Ball Races, Hoses, Jacks, and other specialised components. These items are to be ordered through the medium of the 'ADVANCE MATERIAL ORDER FORM' (AMOF), its whole purpose being to ensure that ordering of other than stock material is not held up pending the first issue of Experimental Drawings. A facsimile of the form and method of ordering is reproduced here.

ADVANCE MATERIAL ORDER FORM A.M.O.F. No. 600 (A)

*To:* Mr Long, Mr Rex King, Mr Mitchell (EXP. METHODS) *Date* 17-11-50

* The material ordered on the form below has now been embodied in Drg. No. 5-CF-101 Iss. 1.
Any subsequent material alterations will be covered by later issues of the Drg.

~~* Items ordered on the form below are no longer required; for details of replacement see A.M.O.F. No.~~
*(DELETE LINES WHICH ARE NOT APPLICABLE)

*Signed* ..... *Dept.* EXP. DO.

*Tear along this line*

ADVANCE MATERIAL ORDER FORM A.M.O.F. No. 600 (B)
FOR PROTOTYPE D.H. 105

*To:* Mr Long, Mr Rex King, Mr Mitchell (EXP. METHODS) *Date* 2-9-50.

COMPONENT: CONTROL COLUMN.

THE FOLLOWING MATERIAL WILL BE REQUIRED ON THE ABOVE AIRCRAFT

| MATERIAL | | | Specn. | No. Off Per A/c | Methods Office Record |
|---|---|---|---|---|---|
| Item No. | Description | Size and/or Part Number | | | |
| 1. | BALL RACE | SKF. 13303 | | 4 | |
| 2. | CHAIN WITH SPECIAL END FITTING. (SEE DRG. 5 X 17) | 3/8" PITCH | B.S.2. | 1 | |
| 3. | HTS ROUND BAR | 3" O/D X 14" | D.T.D473 | 1 | |
| 4. | M.S. TUBE | 2" O/D X 10SWG X 4'-0" | T45 | 1 | |
| 5 | HANDWHEEL SUPPLIED BY XYZ LTD | ABCZ3 | | 2 | |

*Remarks:* ABOVE QUANTITY FOR PROTOTYPE ONLY.
1 HANDWHEEL WILL BE REQUIRED FOR TEST.

Form No. 1630/5.49 B.P. G.7125 *Signed* ..... *Dept.* EXP. D.O.

The bottom portion "A" is to be completed and issued as soon as possible to ensure that the material will be available against the issue of drawings. The top portion "B" should also be completed as soon as possible, especially if the material is to be cancelled or changed. If material changes are made without the initial notification being cancelled, large quantities of material become redundant.

DO NOT LEAVE PORTION "B" LAYING AROUND IN THE BOOK WHEN DRAWINGS INCORPORATING PORTION "A" HAVE BEEN ISSUED.

3. DRAWING OFFICE INSTRUCTION (D.O.I) BOOK.

These books comprise transparent numbered sheets which are used for Urgent Modification Action and for issuing Advance information to the Shops. A carbon copy is retained in the book for reference and the detachable transparent copy is issued for printing in the usual manner.

It is important to note that D.O.I's which will affect interchangeability, safety, functioning, and cost, on aircraft in Production and Service, must be made the subject of an official mod. (not an internal mod.) The D.O.I. must then be treated in the same manner as a 'Z' number (i.e. a drawing used for emparting "advanced information" to the shops) and must be quoted and issued with the Mod. Sheet.

Where a D.O.I. makes a change that will subsequently affect the master drawings, the master drawing must be endorsed with a pencil note:- "SEE D.O.I._ _ _ _ _." This note will be removed upon incorporation of the change which must be effected as soon as possible after the issue of the D.O.I.

The D.O.I. may be also be used as a measure to modify or convert components which may have become obsolete due to the introduction of a modification. In such cases, the modification sheet and/or the modified drawing will state:- "For alteration to existing stocks see D.O.I....."

4. DRAWING DEVIATION NOTES.

These are sent in by Inspectors in the Experimental and Lofting Departments to cover queries on Prototype Aircraft and Trial Installations. They indicate deviations from drawing dimensions which have been proved incorrect and which are brought to the notice of the Draughtsman concerned for correction before the drawing is released for production.

Deviation notes are entered in a register by the Office Clerk and passed to the Draughtsman for action. An acknowledgement that the drawing has been corrected is embodied in the bottom half of the form; this portion should be completed without delay and the entire form returned to the Office Clerk, who will file the top half and return the acknowledgement to the originator.

5. WORKS QUERY NOTES.

These, broadly, form the liaison between the Production Department and the Drawing Office and cover a wide field of applications, such as requests for alternative methods of construction, alternative materials, queries on dimensions and alterations to drawings to suit a particular method of assembly.

The lower portion of the query note is for the Drawing Office Reply, which should be as clear and concise as possible, illustrated where necessary by sketches, as the information given constitutes an authority for the recipient to take appropriate action on the query. Care must be observed to see that the carbon copies are legible.

Works Query Notes must be answered promptly to avoid needless production delays.

# CHAPTER 7. DRAWING OFFICE SERVICES.

## 1. LOFTING DEPARTMENT.

The object of these notes is to describe briefly the organisation of the Lofting Department, and its relation to the Drawing Office.

The Department is under the Supervision of the Design Department and consists of three distinct sections with the following functions:-

### (1) FULL SCALE LAYOUT SECTION.

This section is responsible for drawing accurately and to Full Scale on specially prepared metal sheets, the complete fairing lines of the aircraft. In addition they will supply ordinates, dimensions and other information on special sections, curves and other shapes to the Master Layout Section and, also, to the Drawing offices and other departments requiring such information.

### (2) MASTER PLATE SECTION.

This section draws on specially grained metal sheets, all sheet metal and other details for which tool templates are required. These 'drawings' are known as 'Master Plates' and show the part as 'Developed' in the flat, with tooling holes, bending allowances, press tool profiles and any other information required by the Production Department.

It will be appreciated that drawings of sheet metal parts are quickly 'proved' in this department before manufacture or tooling is commenced. Any errors on the drawings therefore, require to be quickly corrected in accordance with the Deviation Note originated by the Lofting Department.

### (3) PROCESS SECTION.



This section reproduces from the Master Plates, by a lithographic process all tool templates, etc. as requested.

### (4) ROUTINE PROCEDURE BETWEEN DESIGN AND LOFTING DEPARTMENT.

It will be the responsibility of the Design Department to supply a preliminary set of fairing lines, drawn to a convenient scale, which will also include particular dimensional stations, e.g. fuselage and engine nacelle cross-sections, wing profiles, and other geometry necessary to the overall design of the aircraft. Where a component has a straight taper - say an Aileron - it would be sufficient to give profile dimensions of each end rib, with plan outline and rib positions only. Any such information found by the full-scale layout section to be incorrect will be rectified and "faired in" by them in agreement with the Design Department.

Preliminary lines drawings done by the Design Department must not be issued to the Shops; they may, however, be sufficiently accurate for work in the Mock-up room, and could be issued for that purpose.

Although it is desired to avoid unnecessary Memos and other paper work, the Drawing Office practise of requesting information from the full scale layout section on odd scraps of paper must cease. Such requests from any department should be clearly written in a Duplicate Book and amplified where necessary, with a sketch done on detail paper, or a print of the drawing, signed by the Section Leader in the Drawing Office, or Department concerned.

The Full-Scale Layout Section will enter the information required on a Layout Ref. Sheet, and identify it by placing the suffix/M behind the Drawing Number, e.g. if the sketch be of a Stiffening Channel, Part No. 6.W.273, the Ref. Sheet will become 6.W.273/M. The original will be retained and filed and a copy sent to the department requesting the information. Personal Part or Drawing Number Systems are not allowed, and all work done in the Lofting Department must be immediately identifiable with the Drawing Number used by the Design Department.

1 (4) continued.

Typical examples where the Drawing Office requires information from the Full Scale Layout Section are as follows:-

(a) A cross section through the fuselage is required at 30° to the horizontal datum between two existing frames. A note to the Lofting Department will request this information, which will be issued on a Reference Sheet, the number of which will be that of the fuselage G.A.

(b) The drawing office may request the Full Scale Layout Section to check clearances between components.

(c) As the wing, fuselage, canopy, engine necelles cross sections are drawn as 'nested' sections by the Master Plate Section, copies of these can be obtained on Cartridge paper for Drawing Office use. Judicious use of these printed sections can save many hours in setting out profiles.

(5) DIMENSIONS DEPENDENT ON LOFTING.

All ordinates and profile dimensions which are dependent on full scale layout will be omitted from drawings and in such cases the following note must be added in bold lettering to the drawing:-
"DIMENSIONS NOT GIVEN ARE GOVERNED BY MASTER LAYOUT PLATES".

It must be emphasised, however, that this note is not to be used by Draughtsmen as an excuse for incomplete dimensioning of detail parts.

Typical examples such as flat plates or fittings having simple bends which cannot be fully dimensioned due to the complete geometry not being available in the Drawing Office, must not carry the above note. In these cases, it is the duty of the draughtsman to request such
26. information as he requires from the Full Scale Layout Section as outlined in Para.(4) and to complete the drawing before issue. Discretion must be exercised in determining which drawings will be dimensioned. For example:- curved members with complex curvatures would not be dimensioned, but would be dependent on the Master Plate; on the other hand, a flat gusset plate adjoining, say two frames, which may be located at an angle to the relative datums could be fully dimensioned in conjunction with the Full Scale Layout Section.

IN CASES OF DOUBT, OBTAIN THE ADVICE OF THE LOFTING DEPARTMENT.

(6) LOFTING DEPARTMENT HANDBOOK.

A Lofting Handbook has been prepared, detailing the work of the department and methods of procedure for each section. Copies are available for reference in the D.O. Standards Section.

2. DRAWINGS LIBRARY.

(1) All drawings, with the exception of those being used by the Experimental Drawing Office on prototype aircraft are filed in the Drawings Library. Master tracings, i.e. linen or paper originals must not be used for reference purposes and should only be obtained from the Library when modifications action is necessary.

A complete set of prints are available for reference purposes. Prints or Master Tracings may be obtained by filling in a yellow ticket and handing it to the Drawings Library Assistant who is stationed in each office.

Where the original Drawings are in use in the Drawing Office and are required by the Drawings Library for printing, a label must be attached to the drawing. This will ensure the prompt return of the original drawing to the Draughtsman concerned.

(2) Drawings from outside sources e.g. other firms, M.O.S., etc. must not be retained by individuals to amass a private collection. All such drawings (excluding SIS, AGS, BSI, SBAC) must be indexed and

2. (2) continued.

numbered immediately upon receipt by the Drawings Library. SIS, AGS, BSI, publications, etc. will be filed by the Standards Section.

When these drawings are finished with they must be returned immediately to the Library for filing. Drawings in this class are known as "Outside Prints" and carry an "OP" number; a register is available in the Library under two headings:-

(a) A numerical index of "OP" numbers giving the name of the Part and the Firm concerned.

(b) An alphabetical Index from which a part can be found by reference to its name, without knowing either its proprietary Part Number of "OP" Drawing Number.

To assist in finding drawings of parts from external sources, the aircraft drawing on which they are called up is to quote the "OP" No. in Brackets e.g.

A.I.R. 4000 LOCKHEED
UNDERCARRIAGE JACK
(D.O. REF. OP.1001)

3. PRODUCTION LIAISON.

Two Production Liaison Engineers are permanently stationed in the Experimental Drawing Office to give advice and assistance on all aspects of Production Technique. It must be emphasised that their advice and experience should be sought in the Initial Design Stages, to avoid unnecessary alterations and re-design when the aircraft goes on production.

4. STANDARDS SECTION.



(1) GENERAL.

Standard Parts must be used wherever possible without needlessly restricting the design of a component. The saving of man-hours through D.O. Library, and Production Departments is considerable if a standard part can be utilised and there is an advantage from the Servicing and Maintenance point of view in that a number of varieties of almost the same article do not have to be held in stock.

Standardisation in relation to military aircraft is most important as detailed in Paragraph (4) S.D.M.

The Standards Section controlls all External and Internal Standards. The external standards comprise B.S.I. standard parts and processes, S.B.A.C. AS. parts, AGS, S.I.S. and various proprietary items. Internal Standards are de Havilland Standard Parts and Processes (DHS) de Havilland Standard Section and Extrusions. (J Drg. Nos.) In addition numerous publications issued by the M.O.S., B.S.I. and S.B.A.C. are available for reference.

Data sheets of the more generally used standards are included in this handbook and copies of AGS, BSI and SBAC Standards, D.H Standards and Standard Sections are available in each Drawing Office for use by the staff.

(2) STANDARD SECTIONS (J. SECTIONS)

To facilitate the choice of a suitable section an illustrated and catalogued "Index to Standard Sections" has been prepared and numerous copies are in circulation for reference.

4. (2) continued.

In view of the difficulty of choosing a suitable rubber section from an illustration only, sample lengths of all D.H. standard rubber sections are retained by the Standards Section for inspection.

Components, stringers, etc made from Standard Sections shall be given an aircraft Part No; this will usually be 'N.D.' number and will carry the note:- "Make from Standard Section-----"

(3) DE HAVILLAND STANDARD PARTS AND PROCESSES. (DHS)

These cover a wide range of items which are outside the scope of the National Standards, and staff are requested to familiarise themselves with the series. D.H.S. 1 to D.H.S. 499 are actual physical parts, D.H.S. 500 to D.H.S. 599 comprise standard instructions and processes, e.g. Standard Lightening Holes, Slotted Holes, Standard Swages, Undercuts, etc. The majority of the latter group are reproduced in this Handbook under a Data sheet number.

(4) STANDARDISATION DESIGN MEMORANDA (S.D.M.)

In respect of Military aircraft it has been decided that the maximum degree of standardisation shall be introduced.

To this end the M.O.S. has issued the S.D.M. series of instructions which cover a very wide field of components and accessories and which are Mandatory in the Design of Military aircraft. Staff should acquaint themselves with this series which are available for reference in each department.

(5) PROTECTIVE TREATMENTS.

A separate protective treatment chart is issued for each aircraft type, where the treatment required for various materials are indicated by appropriate symbols. Care must be taken to ensure that the correct protective treatment symbols are called for in the "Finish" column on drawings. The treatments called for on the drawing must be approved by the assistant Designer I/C of the component.

In the case of Civil Aircraft, the finish and colour of many components will be dependent upon the furnishing Scheme, which may vary with the customer. In such cases the "Finish" will also carry a reference to the Upholstery Chart.

(6) PREVENTION OF CORROSION DUE TO ELECTROLYTIC ACTION.

Careful consideration should be given to the selection of materials to avoid a high inherent potential difference between metals either in direct contact, including plating, or liable to be bridged by moisture. Also wherever possible, drilling or other damage to protected surfaces should be avoided.

Corrosion begins when an electrolyte bridges the joint thereby setting up a current flow between the two metals. From a practical point of view, moisture from any source (e.g., condensation, rain, sea-water) can function as an electrolyte.

# GALVANIC CORROSION

GENERAL.

GALVANIC CORROSION WILL OCCOUR WHEN ALUMINIUM IS JOINED IN METAL TO METAL CONTACT WITH OTHER MORE NOBLE METALS WITH THE JOINT BEING EXPOSED TO A LIQUID IE (SALT WATER) THAT CAN CARRY AN ELECTRIC CURR. THIS TYPE OF CORROSION CAN BE AVOIDED BY PROPERLY DESIG BI-METAL JOINTS, PROPER ATTENTION BEING GIVEN TO INSULAT AND THE ANODE AND CATHODE RATIOS, THE KIND OF METAL WHICH ALUMINIUM IS CONECTED, THE RELATIVE AREAS OF THE TWO METALS. THE DEGREE OF IMERSION INFLUENCE THE SEVERITY OF GALVANIC ATTACK. THE SURFACE RATIO EXPOSED TO SEA WATER SHOULD BE SIX TIMES GREATER THAN STAINLESS STEEL.

(1) B.54 S HAS A RESISTANCE TO CORROSION BY SEA WATER SIMILAR TO THAT OF 3 S AND HAS PERFORMED WELL IN LAUNCHES UP TO 25 YEARS OF SERVICE.

(2) BI-METAL CONECTIONS BOTH PAINTED GIVES AN INSULATION THAT CHOKES OFF THE ELECTRICAL CURRENT AND NO GALVANI ACTION TAKES PLACE.

(3) SACRIFICIAL ANODES ENSURE AGAINST GALVANIC CORROSION WHEN PAINT CANNOT BE USED.

(4) IF ALUMINIUM IS LEFT UNPROTECTED THERE WILL BE CORROSION WHERE IT IS IN DIRECT CONTACT WITH UNPAINTED WOOD.

CLAD ALLOYS ARE ALWAYS RECOMENDED.

(6) ZINC CHROMATE PRIMER IS HIGHLY RECOMENDED.

(7) CASTING ALLOYS ALCAN 135 & 356 LOOSE THEIR MECHANICAL PROPERTIES ON BEING WELDED AND 356T4 ALLOY BECOMES SUSCEPTIBLE TO STRESS CORROSION & SHOULD NEVER BE WELDED.

(8) STAINLESS STEEL BOLTS SHOULD BE USED TO KEEP THE POSSIBILITY OF GALVANIC CORROSION TO A MINIMUM, SYNTHETIC WASHERS SHOULD BE UNDER THE METAL WASHERS.

(9) UNDER NO CONDITIONS SHOULD PLAIN STEEL, BRONZE, OR NICKEL ALLOYS BOLTS BE USED.

(10) NEVER USE LUBRICANTS CONTAINING GRAPHITE.

# GALVANIC CORROSION

GENERAL

GALVANIC CORROSION WILL OCCUR WHEN ALUMINIUM IS JOINED IN METAL TO METAL CONTACT WITH OTHER MORE NOBLE METALS WITH THE JOINT BEING EXPOSED TO A LIQUID IE (SALT WATER) THAT CAN CARRY AN ELECTRIC CURRE[illegible] THIS TYPE OF CORROSION CAN BE AVOIDED BY PROPERLY DESIG[illegible] BI-METAL JOINTS, PROPER ATTENTION BEING GIVEN TO INSULATI[illegible] AND THE ANODE AND CATHODE RATIOS, THE KIND OF METAL[illegible] WHICH ALUMINIUM IS CONNECTED, THE RELATIVE AREAS OF TH[illegible] TWO METALS, THE DEGREE OF IMMERSION INFLUENCE THE SEVERITY OF GALVANIC ATTACK. THE SURFACE RATIO [illegible] EXPOSED TO SEA WATER SHOULD BE SIX TIMES GREATER THAN STAINLESS STEEL.

(1) B.54S HAS A RESISTANCE TO CORROSION BY SEA WAT[illegible] SIMILAR TO THAT OF 3S AND HAS PERFORMED WELL IN LAUNCHES UP TO 25 YEARS OF SERVICE.

(2) BI-METAL CONNECTIONS BOTH PAINTED GIVES AN INSULATION THAT CHOKES OFF THE ELECTRICAL CURRENT AND NO GALVA[illegible] ACTION TAKES PLACE.

(3) SACRIFICIAL ANODES ENSURE AGAINST GALVANIC COR[illegible] WHEN PAINT CANNOT BE USED.

(4) IF ALUMINIUM IS LEFT UNPROTECTED THERE WILL BE CORRO[illegible] WHERE IT IS IN DIRECT CONTACT WITH UNPAINTED WOOD.

(5) CLAD ALLOYS ARE ALWAYS RECOMMENDED.

(6) ZINC CHROMATE PRIMER IS HIGHLY RECOMMENDED.

(7) CASTING ALLOYS ALCAN 135 & 356 LOOSE THEIR MECHANI[illegible] PROPERTIES ON BEING WELDED AND 350T4 ALLOY BECO[illegible] SUSCEPTIBLE TO STRESS CORROSION & SHOULD NEVER BE WELDE[illegible]

(8) STAINLESS STEEL BOLTS SHOULD BE USED TO KEEP THE POSSIBILITY OF GALVANIC CORROSION TO ALUMINIUM, SYNTH[illegible] WASHERS SHOULD BE UNDER THE METAL WASHERS.

(9) UNDER NO CONDITIONS SHOULD PLAIN STEEL, BRONZE, OR NICKEL ALLOYS BOLTS BE USED.

(10) NEVER USE LUBRICANTS CONTAINING GRAPHITE.

(7) RECOMMENDED ALLOWABLE POTENTIAL DIFFERENCE.

Typical values of the E.M.F. between metals and a saturated calomel electrode in sea-water at room temperature are given in Para 8. The Difference between the electrode potential values for any pair provides a guide to the probable danger of electrolytic corrosion of the more negative metal at an unprotected or inadequately protected joint.

If the maximum allowable potential difference is fixed too high the dangers of corrosion are increased, and if fixed too low unnecessary restrictions in design are imposed. In practice, though still open to some objections, the allowable potential difference should be chosen according to the severity of the conditions to be faced as follows:-

| Maximum potential difference (in sea-water) | Condition of use. |
|---|---|
| 0.25 volt | Liable to wetting with salt water or normally exposed to the weather. |
| 0.50 volt | Interior parts which may be exposed to condensation but not to contamination with salt. |
| No restriction (but see para following) | Interior parts of hermetically sealed components and equipment. |

Where joints are not exposed to moisture there is no objection on grounds of corrosion trouble to the use of any dissimilar metals in contact. Unless, however, a desiccant is present, or unless all materials of an absorbent nature are dried at elevated temperatures before sealing, hermetic sealing does not ensure freedom from moisture which may be released when the assembly is warm and condensed elswhere on cooling.

(8) POTENTIALS AGAINST A SATURATED CALOMEL ELECTRODE IN SEA-WATER AT ROOM TEMPERATURE (values to nearest 50 millivolts)

| Material | Volts |
|---|---|
| Magnesium and its alloys | -1.60 |
| Zinc and its alloys:- | |
| Zinc die-casting alloy, B.S.1004 | -1.10 |
| Zinc plating on steel, D.T.D. 903 | -1.10 |
| Zinc plating on steel, chromate passivated, D.T.D. 923 | -1.05 |
| Galvanised iron, B.S. 729 | -1.05 |
| Tin-zinc alloy (80/20) plating on steel | -1.05 |
| Cadmium and its alloys:- | |
| Cadmium-zinc solder, D.T.D. 221 | -1.05 |
| Cadmium plating on steel, D.T.D. 904 | -0.80 |
| Aluminium and its alloys:- | |
| Aluminium alloy casting, B.S.L5. | -0.90 |
| Aluminium alloy casting, D.T.D. 424 | -0.80 |
| Aluminium alloy castings, B.S.L33, L51 | -0.75 |
| Wrought aluminium alloy coated aluminium alloy, D.T.D.687 | -0.90 |
| Wrought aluminium, B.S.L4, L16, L17, L34, T9. | -0.75 |
| Wrought aluminium coated aluminium alloys, B.S.L38. D.T.D.546, 610 | -0.75 |
| Wrought aluminium alloy D.T.D. 683 | -0.80 |
| Wrought aluminium alloys other than duralumin and D.T.D.683 | -0.75 |
| Duralumin type alloys, B.S.395, 396, L1, L3, L39, T4, D.T.D.364, 464, 603, 646. | -0.60 |

| Material | Volts |
|---|---|
| **Irons and Steels:-** | |
| Non-stainless:- B.S.S2, S6 | -0.75 |
| B.S.S3, T1, T45, Grey cast iron | -0.70 |
| Stainless:- 12% chromium, B.S.S61, S62, S85, D.T.D.161, 203 | -0.45 |
| High chromium, B.S.S80, D.T.D.60, 146, 185 | -0.35 |
| Austenitic, B.S.S110, T55, T58, D.T.D.166, 171 | -0.20 |
| **Lead and its alloys:-** | |
| Lead | -0.55 |
| Lead-silver solder (2½% Ag) | -0.50 |
| **Tin and its alloys:-** | |
| Tin-lead solders, B.S.219, Grades A and B | -0.50 |
| Tinned steel, B.S.S20 | -0.50 |
| Tin plating on steel, D.T.D.924 | -0.45 |
| **Chromium:-** | |
| Chromium plating, 0.0005 inch on steel | -0.50 |
| Chromium plating, 0.00003 inch on nickel-plated steel | -0.45 |
| Chromium (massive, 99%) | -0.45 |
| **Copper and its alloys:-** | |
| Brass, B.S.265 | -0.30 |
| Brass, B.S.249; Gunmetal, B.S.383 | -0.25 |
| Copper, B.S.899; Copper-Beryllium, T.C.M. Cu-Be 250; Brasses, B.S.250, D.T.D.283; Bronzes, B.S.407, D.T.D.412; "Nickel-silver" B.S.790; Cupro-nickel (70/30) | -0.20 |
| **Nickel and its alloys:-** | |
| 45% Nickel alloy, D.T.D.237 | -0.25 |
| Monel metal, D.T.D.10; Monel K | -0.15 |
| Nickel plating on steel, B.S.1224 (Ni 8S Category) | -0.15 |
| **Silver and its alloys:-** | |
| Silver solder, B.S.206 Grade C | -0.20 |
| Silver; Silver plating on copper, Silver-gold (90/10) alloy | 0 |
| Rhodium plating on silver-plated copper | 0.05 |
| Platinum | 0.15 |
| Gold (Assay grade) | 0.15 |

# THE DE HAVILLAND AIRCRAFT COMPANY LTD., HATFIELD, HERTS.

## GENERAL CONVERSION TABLE

| TO CONVERT | TO | MULTIPLY BY |
|---|---|---|
| **LENGTH** | | |
| INCHES | MILLIMETRES | 25·40 |
| MILLIMETRES | INCHES | ·03937 |
| FEET | METRES | ·30479 |
| METRES | FEET | 3·2809 |
| **AREA** | | |
| SQUARE INCHES | SQUARE CENTIMETRES | 6·4514 |
| SQUARE CENTIMETRES | SQUARE INCHES | ·1550 |
| SQUARE FEET | SQUARE METRES | ·0929 |
| SQUARE METRES | SQUARE FEET | 10·7643 |
| **VOLUME** | | |
| GALLONS | LITRES | 4·5435 |
| LITRES | GALLONS | ·2201 |
| CUBIC INCHES | LITRES | ·0164 |
| LITRES | CUBIC INCHES | 61 |
| CUBIC FEET | GALLONS | 6·243 |
| GALLONS | CUBIC FEET | ·16 |
| CUBIC INCHES | CUBIC CENTIMETRES | 16·39 |
| CUBIC CENTIMETRES | CUBIC INCHES | ·061 |
| **WEIGHT** | | |
| POUNDS | KILOGRAMMES | ·4536 |
| KILOGRAMMES | POUNDS | 2·2046 |
| OUNCES | GRAMMES | 28·3495 |
| GRAMMES | OUNCES | ·03527 |

| TO CONVERT | TO | MULTIPLY BY |
|---|---|---|
| **VELOCITY** | | |
| MILES PER HOUR | KNOTS | ·8684 |
| KNOTS | MILES PER HOUR | 1·1515 |
| MILES PER HOUR | KILOMETRES PER HOUR | 1·6093 |
| KILOMETRES PER HOUR | MILES PER HOUR | ·62138 |
| MILES PER HOUR | FEET PER SECOND | 1·467 |
| FEET PER SECOND | MILES PER HOUR | ·682 |
| **DENSITY** | | |
| LBS PER CUBIC FOOT | KGM PER CUBIC METRE | 16·02 |
| KGM PER CUBIC METRE | LBS PER CUBIC FOOT | ·0624 |
| LBS PER GALLON | KGM PER LITRE | ·0998 |
| KGM PER LITRE | LBS PER GALLON | 10·02 |
| **PRESSURE & STRESS** | | |
| POUNDS PER SQ. INCH | GRAMMES PER SQ. CM. | 70·3 |
| GRAMMES PER SQ. CM | POUNDS PER SQ. INCH | ·0142 |
| TONS PER SQ. INCH | KGM PER SQ. M/M. | 1·575 |
| KGM PER SQ. M/M | TONS PER SQ. INCH | ·635 |
| LBS PER SQ. INCH. | ATMOSPHERES | ·068 |
| ATMOSPHERES | LBS PER SQ. INCH | 14·7 |
| LBS PER SQ. FOOT | KGM PER SQ. METRE | 4·883 |
| KGM. PER SQ. METRE | LBS PER SQ. FOOT | ·205 |

## MILLIMETRES TO INCHES

| M/M | | 10 | 20 | 30 | 40 | 50 | 60 | 70 | 80 | 90 |
|---|---|---|---|---|---|---|---|---|---|---|
| 0 | | ·39370 | ·78740 | 1·18110 | 1·57480 | 1·96851 | 2·36221 | 2·75591 | 3·14961 | 3·54331 |
| 1 | ·03937 | ·43307 | ·82677 | 1·22047 | 1·61417 | 2·00788 | 2·40158 | 2·79528 | 3·18898 | 3·58268 |
| 2 | ·07874 | ·47244 | ·86614 | 1·25984 | 1·65354 | 2·04725 | 2·44095 | 2·83465 | 3·22835 | 3·62205 |
| 3 | ·11811 | ·51181 | ·90551 | 1·29921 | 1·69291 | 2·08662 | 2·48032 | 2·87402 | 3·26772 | 3·66142 |
| 4 | ·15748 | ·55118 | ·94488 | 1·33858 | 1·73228 | 2·12599 | 2·51969 | 2·91339 | 3·30709 | 3·70079 |
| 5 | ·19685 | ·59055 | ·98425 | 1·37795 | 1·77165 | 2·16536 | 2·55906 | 2·95276 | 3·34646 | 3·74016 |
| 6 | ·23622 | ·62992 | 1·02362 | 1·41732 | 1·81103 | 2·20473 | 2·59843 | 2·99213 | 3·38583 | 3·77953 |
| 7 | ·27559 | ·66929 | 1·06299 | 1·45669 | 1·85040 | 2·24410 | 2·63780 | 3·03150 | 3·42520 | 3·81890 |
| 8 | ·31496 | ·70866 | 1·10236 | 1·49606 | 1·88977 | 2·28347 | 2·67717 | 3·07087 | 3·46457 | 3·85827 |
| 9 | ·35433 | ·74803 | 1·14173 | 1·53543 | 1·92914 | 2·32284 | 2·71654 | 3·11024 | 3·50394 | 3·89764 |

| ISSUE No | DATE |
|---|---|
| 1 | JUNE '54 |

COMPILED
L. SPENCER.
TRACED
DOLTON DRAWING Co. 6. 7. 1953
APPROVED

# CONVERSION TABLES

DRAWING OFFICE DATA SHEET No 1/1A

# THE DE HAVILLAND AIRCRAFT COMPANY LTD., HATFIELD, HERTS.

| FRACTIONS OF AN INCH. | | | DECIMAL EQUIVALENT INS. | METRIC EQUIVALENT M/M |
|---|---|---|---|---|
| | | 1/64" | ·015625 | ·3969 |
| | 1/32" | | ·03125 | ·7937 |
| | | 3/64" | ·046875 | 1·1906 |
| 1/16" | | | ·0625 | 1·5875 |
| | | 5/64" | ·078125 | 1·9844 |
| | 3/32" | | ·09375 | 2·3812 |
| | | 7/64 | ·109375 | 2·7781 |
| 1/8" | | | ·125 | 3·1750 |
| | | 9/64" | ·140625 | 3·5719 |
| | 5/32" | | ·15625 | 3·9687 |
| | | 11/64" | ·171875 | 4·3656 |
| 3/16" | | | ·1875 | 4·7625 |
| | | 13/64" | ·203125 | 5·1594 |
| | 7/32" | | ·21875 | 5·5562 |
| | | 15/64" | ·234375 | 5·9531 |
| 1/4" | | | ·25 | 6·3500 |
| | | 17/64" | ·265625 | 6·7469 |
| | 9/32" | | ·28125 | 7·1437 |
| | | 19/64" | ·296875 | 7·5406 |
| 5/16" | | | ·3125 | 7·9375 |
| | | 21/64" | ·328125 | 8·3344 |
| | 11/32" | | ·34375 | 8·7312 |
| | | 23/64 | ·359375 | 9·1281 |
| 3/8" | | | ·375 | 9·5250 |
| | | 25/64" | ·390625 | 9·9219 |
| | 13/32" | | ·40625 | 10·3187 |
| | | 27/64" | ·421875 | 10·7156 |
| 7/16" | | | ·4375 | 11·1125 |
| | | 29/64" | ·453125 | 11·5094 |
| | 15/32" | | ·46875 | 11·9062 |
| | | 31/64" | ·484375 | 12·3031 |
| 1/2" | | | ·5 | 12·7000 |

| FRACTIONS OF AN INCH | | | DECIMAL EQUIVALENT INS. | METRIC EQUIVALENT M/M |
|---|---|---|---|---|
| | | 33/64" | ·515625 | 13·0969 |
| | 17/32" | | ·53125 | 13·4937 |
| | | 35/64" | ·546875 | 13·8906 |
| 9/16" | | | ·5625 | 14·2875 |
| | | 37/64" | ·578125 | 14·6844 |
| | 19/32" | | ·59375 | 15·0812 |
| | | 39/64" | ·609375 | 15·4781 |
| 5/8" | | | ·625 | 15·8750 |
| | | 41/64" | ·640625 | 16·2719 |
| | 21/32" | | ·65625 | 16·6687 |
| | | 43/64" | ·671875 | 17·0656 |
| 11/16" | | | ·6875 | 17·4625 |
| | | 45/64" | ·703125 | 17·8594 |
| | 23/32" | | ·71875 | 18·2562 |
| | | 47/64" | ·734375 | 18·6531 |
| 3/4" | | | ·75 | 19·0500 |
| | | 49/64" | ·765625 | 19·4469 |
| | 25/32" | | ·78125 | 19·8437 |
| | | 51/64" | ·796875 | 20·2406 |
| 13/16" | | | ·8125 | 20·6375 |
| | | 53/64" | ·828125 | 21·0344 |
| | 27/32" | | ·84375 | 21·4312 |
| | | 55/64" | ·859375 | 21·8281 |
| 7/8" | | | ·875 | 22·2250 |
| | | 57/64 | ·890625 | 22·6219 |
| | 29/32" | | ·90625 | 23·0187 |
| | | 59/64" | ·921875 | 23·4156 |
| 15/16" | | | ·9375 | 23·8125 |
| | | 61/64" | ·953125 | 24·2094 |
| | 31/32" | | ·96875 | 24·6062 |
| | | 63/64" | ·984375 | 25·0031 |
| 1" | | | 1·0 | 25·400 |

| SIZES OF NUMBER DRILLS | |
|---|---|
| 1 | ·2280 |
| 2 | ·2210 |
| 3 | ·2130 |
| 4 | ·2090 |
| 5 | ·2055 |
| 6 | ·2040 |
| 7 | ·2010 |
| 8 | ·1990 |
| 9 | ·1960 |
| 10 | ·1935 |
| 11 | ·1910 |
| 12 | ·1890 |
| 13 | ·1850 |
| 14 | ·1820 |
| 15 | ·1800 |
| 16 | ·1770 |
| 17 | ·1730 |
| 18 | ·1695 |
| 19 | ·1660 |
| 20 | ·1610 |
| 21 | ·1590 |
| 22 | ·1570 |
| 23 | ·1540 |
| 24 | ·1520 |
| 25 | ·1495 |
| 26 | ·1470 |
| 27 | ·1440 |
| 28 | ·1405 |
| 29 | ·1360 |
| 30 | ·1285 |
| 31 | ·1200 |
| 32 | ·1160 |
| 33 | ·1130 |
| 34 | ·1110 |
| 35 | ·1100 |
| 36 | ·1065 |
| 37 | ·1040 |
| 38 | ·1015 |
| 39 | ·0995 |
| 40 | ·0980 |
| 41 | ·0960 |
| 42 | ·0935 |
| 43 | ·0890 |
| 44 | ·0860 |
| 45 | ·0820 |
| 46 | ·0810 |
| 47 | ·0785 |
| 48 | ·0760 |
| 49 | ·0730 |
| 50 | ·0700 |
| 51 | ·0670 |
| 52 | ·0635 |
| 53 | ·0595 |
| 54 | ·0550 |
| 55 | ·0520 |
| 56 | ·0465 |
| 57 | ·0430 |
| 58 | ·0420 |

| S.W.G. Nº | DECIMAL EQUIVALENT (INS.) | S.W.G. Nº | DECIMAL EQUIVALENT (INS.) |
|---|---|---|---|
| 4/0 | ·400 | 14 | ·080 |
| 3/0 | ·372 | 15 | ·072 |
| 2/0 | ·348 | 16 | ·064 |
| 0 | ·324 | 17 | ·056 |
| 1 | ·300 | 18 | ·048 |
| 2 | ·276 | 19 | ·040 |
| 3 | ·252 | 20 | ·036 |
| 4 | ·232 | 21 | ·032 |
| 5 | ·212 | 22 | ·028 |
| 6 | ·192 | 23 | ·024 |
| 7 | ·176 | 24 | ·022 |
| 8 | ·160 | 25 | ·020 |
| 9 | ·144 | 26 | ·018 |
| 10 | ·128 | 27 | ·0164 |
| 11 | ·116 | 28 | ·0148 |
| 12 | ·104 | 29 | ·0136 |
| 13 | ·092 | 30 | ·0124 |

STANDARD TOOLING HOLE - DRILL Nº 11

DRILL HOLES FOR WIRE LOCKING - SEE D.O. DATA SHEET Nº 1/29 A

TAPPING HOLE SIZES - SEE D.O. DATA SHEET Nº 1/3

| SIZES OF LETTER DRILLS | |
|---|---|
| A | ·234 |
| B | ·238 |
| C | ·242 |
| D | ·246 |
| E | ·250 |
| F | ·257 |
| G | ·261 |
| H | ·266 |
| I | ·272 |
| J | ·277 |
| K | ·281 |
| L | ·290 |
| M | ·295 |
| N | ·302 |
| O | ·316 |
| P | ·323 |
| Q | ·332 |
| R | ·339 |
| S | ·348 |
| T | ·358 |
| U | ·368 |
| V | ·377 |
| W | ·386 |
| X | ·397 |
| Y | ·404 |
| Z | ·413 |

NOMINAL SIZE - BOLTS

| 6 B.A. | 4 B.A. | 2 B.A. | 1/4" | 5/16" | 3/8" | 7/16" | 1/2" | 9/16" | 5/8" | 3/4" | 7/8" | 1" |
|---|---|---|---|---|---|---|---|---|---|---|---|---|
| ·1102 | ·1417 | ·185 | ·25 | ·3125 | ·375 | ·4375 | ·5 | ·5625 | ·625 | ·75 | ·875 | 1·0 |

HOLES FOR BOLTS (OTHER THAN REAMED) IN FIRST CLASS STRUCTURAL WORK.
DRILL SIZE +·004 +·0005 (D.H.S. 550. 3. 2)
CALL UP ÷ * DIA. DRILLED BOLT HOLE"

| | * → | Nº 13 | 1/4" | 5/16" | 3/8" | 7/16" | 1/2" | 9/16" | 5/8" | 3/4" | 7/8" | 1" |
|---|---|---|---|---|---|---|---|---|---|---|---|---|

CLEARANCE HOLES FOR BOLTS IN GENERAL METAL WORK.
DRILL SIZE (TOLERANCE D.H.S. 550.3.3.)

| 32 | 26 | 11 | F | P | W | 29/64" | 33/64" | 37/64" | 41/64" | 49/64" | 57/64" | 1 1/64" |
|---|---|---|---|---|---|---|---|---|---|---|---|---|

CLEARANCE HOLES FOR BOLTS THROUGH TIMBER.
DRILL SIZE

| | | 13/64" | 17/64" | 21/64" | 25/64" | 29/64" | 33/64" | | | | | |
|---|---|---|---|---|---|---|---|---|---|---|---|---|

NOMINAL SIZE - RIVETS & PINS

| 1/16" | 3/32" | 1/8" | 5/32" | 3/16" | 7/32" | 1/4" | 5/16" | 3/8" |
|---|---|---|---|---|---|---|---|---|

HOLES FOR RIVETS IN 1/8" OR THICKER. TOTAL THICKNESS OF SHEETS JOINED.
DRILL SIZE +·004 +·0005 (D.H.S. 550. 3. 2.)

| 1/16" | 3/32" | 1/8" | 5/32" | 3/16" | 7/32" | 1/4" | 5/16" | 3/8" |
|---|---|---|---|---|---|---|---|---|

CLEARANCE HOLES FOR RIVETS IN TOTAL THICKNESSES BELOW 1/8" ALSO GENERAL METAL WORK.
DRILL SIZE +·004 +·0005 (D.H.S. 550. 3. 2.)

| 52 | 41 | 30 | 21 | 11 | 2 | F | 0 | V |
|---|---|---|---|---|---|---|---|---|

HOLES FOR SPLIT PINS. DRILL SIZE

| 51 | 41 | 30 | 20 | 11 | 2 | F |
|---|---|---|---|---|---|---|

NOMINAL SIZE - WOODSCREWS Nº

| 2 | 3 | 4 | 6 | 8 | 10 | 12 | 14 |
|---|---|---|---|---|---|---|---|
| ·08 | ·094 | ·108 | ·136 | ·164 | ·192 | ·220 | ·248 |

CLEARANCE HOLES THROUGH METAL FOR WOODSCREWS.
DRILL SIZE

| 36 | 35 | 30 | 24 | 14 | 4 | B | F |
|---|---|---|---|---|---|---|---|

DRILL HOLES FOR WOODSCREWS.
DRILL SIZE (REF. ONLY)

| 1·5 M/M | 49 | 44 | 35 | 29 | 22 | 14 | 7 |
|---|---|---|---|---|---|---|---|

| ISSUE Nº | DATE |
|---|---|
| 1 | JUNE '54 |
| 2. | OCT. '55. |

COMPILED
L. SPENCER.

TRACED
OLTON DRAWING Co.
14 · 7 · 1953

APPROVED

# DRILL SIZES - DECIMAL EQUIVALENTS - S.W.G.

DRAWING OFFICE DATA SHEET Nº 1/1C

# THE DE HAVILLAND AIRCRAFT COMPANY LTD., HATFIELD, HERTS.

| °F | | °C | °F | | °C | °F | | °C | °F | | °C | °F | | °C |
|---|---|---|---|---|---|---|---|---|---|---|---|---|---|---|
| −58·0 | −50 | −45·6 | 78·8 | 26 | −3·3 | 215·6 | 102 | 38·9 | 352·4 | 178 | 81·1 | 431·6 | 222 | 105·6 |
| −56·2 | −49 | −45·0 | 80·6 | 27 | −2·8 | 217·4 | 103 | 39·4 | 354·2 | 179 | 81·7 | 433·4 | 223 | 106·1 |
| −54·4 | −48 | −44·4 | 82·4 | 28 | −2·2 | 219·2 | 104 | 40·0 | 356·0 | 180 | 82·2 | 435·2 | 224 | 106·7 |
| −52·6 | −47 | −43·9 | 84·2 | 29 | −1·7 | 221·0 | 105 | 40·6 | 357·8 | 181 | 82·8 | 437·0 | 225 | 107·2 |
| −50·8 | −46 | −43·3 | 86·0 | 30 | −1·1 | 222·8 | 106 | 41·1 | 359·6 | 182 | 83·3 | 438·8 | 226 | 107·8 |
| −49·0 | −45 | −42·8 | 87·8 | 31 | −0·6 | 224·6 | 107 | 41·7 | 361·4 | 183 | 83·9 | 440·6 | 227 | 108·3 |
| −47·2 | −44 | −42·2 | 89·6 | 32 | 0 | 226·4 | 108 | 42·2 | 363·2 | 184 | 84·4 | 442·4 | 228 | 108·9 |
| −45·4 | −43 | −41·7 | 91·4 | 33 | 0·6 | 228·2 | 109 | 42·8 | 365·0 | 185 | 85·0 | 444·2 | 229 | 109·4 |
| −43·6 | −42 | −41·1 | 93·2 | 34 | 1·1 | 230·0 | 110 | 43·3 | 366·8 | 186 | 85·6 | 446·0 | 230 | 110·0 |
| −41·8 | −41 | −40·6 | 95·0 | 35 | 1·7 | 231·8 | 111 | 43·9 | 368·6 | 187 | 86·1 | 447·8 | 231 | 110·6 |
| −40·0 | −40 | −40·0 | 96·8 | 36 | 2·2 | 233·6 | 112 | 44·4 | 370·4 | 188 | 86·7 | 449·6 | 232 | 111·1 |
| −38·2 | −39 | −39·4 | 98·6 | 37 | 2·8 | 235·4 | 113 | 45·0 | 372·2 | 189 | 87·2 | 451·4 | 233 | 111·7 |
| −36·4 | −38 | −38·9 | 100·4 | 38 | 3·3 | 237·2 | 114 | 45·6 | 374·0 | 190 | 87·8 | 453·2 | 234 | 112·2 |
| −34·6 | −37 | −38·3 | 102·2 | 39 | 3·9 | 239·0 | 115 | 46·1 | 375·8 | 191 | 88·3 | 455·0 | 235 | 112·8 |
| −32·8 | −36 | −37·8 | 104·0 | 40 | 4·4 | 240·8 | 116 | 46·7 | 377·6 | 192 | 88·9 | 456·8 | 236 | 113·3 |
| −31·0 | −35 | −37·2 | 105·8 | 41 | 5·0 | 242·6 | 117 | 47·2 | 379·4 | 193 | 89·4 | 458·6 | 237 | 113·9 |
| −29·2 | −34 | −36·7 | 107·6 | 42 | 5·6 | 244·4 | 118 | 47·8 | 381·2 | 194 | 90·0 | 460·4 | 238 | 114·4 |
| −27·4 | −33 | −36·1 | 109·4 | 43 | 6·1 | 246·2 | 119 | 48·3 | 383·0 | 195 | 90·6 | 462·2 | 239 | 115·0 |
| −25·6 | −32 | −35·6 | 111·2 | 44 | 6·7 | 248·0 | 120 | 48·9 | 384·8 | 196 | 91·1 | 464·0 | 240 | 115·6 |
| −23·8 | −31 | −35·0 | 113·0 | 45 | 7·2 | 249·8 | 121 | 49·4 | 386·6 | 197 | 91·7 | 465·8 | 241 | 116·1 |
| −22·0 | −30 | −34·4 | 114·8 | 46 | 7·8 | 251·6 | 122 | 50·0 | 388·4 | 198 | 92·2 | 467·6 | 242 | 116·7 |
| −20·2 | −29 | −33·9 | 116·6 | 47 | 8·3 | 253·4 | 123 | 50·6 | 390·2 | 199 | 92·8 | 469·4 | 243 | 117·2 |
| −18·4 | −28 | −33·3 | 118·4 | 48 | 8·9 | 255·2 | 124 | 51·1 | 392·0 | 200 | 93·3 | 471·2 | 244 | 117·8 |
| −16·6 | −27 | −32·8 | 120·2 | 49 | 9·4 | 257·0 | 125 | 51·7 | 393·8 | 201 | 93·9 | 473·0 | 245 | 118·3 |
| −14·8 | −26 | −32·2 | 122·0 | 50 | 10·0 | 258·8 | 126 | 52·2 | 395·6 | 202 | 94·4 | 474·8 | 246 | 118·9 |
| −13·0 | −25 | −31·7 | 123·8 | 51 | 10·6 | 260·6 | 127 | 52·8 | 397·4 | 203 | 95·0 | 476·6 | 247 | 119·4 |
| −11·2 | −24 | −31·1 | 125·6 | 52 | 11·1 | 262·4 | 128 | 53·3 | 399·2 | 204 | 95·6 | 478·4 | 248 | 120·0 |
| −9·4 | −23 | −30·6 | 127·4 | 53 | 11·7 | 264·2 | 129 | 53·9 | 401·0 | 205 | 96·1 | 480·2 | 249 | 120·6 |
| −7·6 | −22 | −30·0 | 129·2 | 54 | 12·2 | 266·0 | 130 | 54·4 | 402·8 | 206 | 96·7 | 482 | 250 | 121 |
| −5·8 | −21 | −29·4 | 131·0 | 55 | 12·8 | 267·8 | 131 | 55·0 | 404·6 | 207 | 97·2 | 500 | 260 | 127 |
| −4·0 | −20 | −28·9 | 132·8 | 56 | 13·3 | 269·6 | 132 | 55·6 | 406·4 | 208 | 97·8 | 518 | 270 | 132 |
| −2·2 | −19 | −28·3 | 134·6 | 57 | 13·9 | 271·4 | 133 | 56·1 | 408·2 | 209 | 98·3 | 536 | 280 | 138 |
| −0·4 | −18 | −27·8 | 136·4 | 58 | 14·4 | 273·2 | 134 | 56·7 | 410·0 | 210 | 98·9 | 554 | 290 | 143 |
| 1·4 | −17 | −27·2 | 138·2 | 59 | 15·0 | 275·0 | 135 | 57·2 | 411·8 | 211 | 99·4 | 572 | 300 | 149 |
| 3·2 | −16 | −26·7 | 140·0 | 60 | 15·6 | 276·8 | 136 | 57·8 | 413·6 | 212 | 100·0 | 590 | 310 | 154 |
| 5·0 | −15 | −26·1 | 141·8 | 61 | 16·1 | 278·6 | 137 | 58·3 | 415·4 | 213 | 100·6 | 608 | 320 | 160 |
| 6·8 | −14 | −25·6 | 143·6 | 62 | 16·7 | 280·4 | 138 | 58·9 | 417·2 | 214 | 101·1 | 626 | 330 | 166 |
| 8·6 | −13 | −25·0 | 145·4 | 63 | 17·2 | 282·2 | 139 | 59·4 | 419·0 | 215 | 101·7 | 644 | 340 | 171 |
| 10·4 | −12 | −24·4 | 147·2 | 64 | 17·8 | 284·0 | 140 | 60·0 | 420·8 | 216 | 102·2 | 662 | 350 | 177 |
| 12·2 | −11 | −23·9 | 149·0 | 65 | 18·3 | 285·8 | 141 | 60·6 | 422·6 | 217 | 102·8 | 680 | 360 | 182 |
| 14·0 | −10 | −23·3 | 150·8 | 66 | 18·9 | 287·6 | 142 | 61·1 | 424·4 | 218 | 103·3 | 698 | 370 | 188 |
| 15·8 | −9 | −22·8 | 152·6 | 67 | 19·4 | 289·4 | 143 | 61·7 | 426·2 | 219 | 103·9 | 716 | 380 | 193 |
| 17·6 | −8 | −22·2 | 154·4 | 68 | 20·0 | 291·2 | 144 | 62·2 | 428·0 | 220 | 104·4 | 734 | 390 | 199 |
| 19·4 | −7 | −21·7 | 156·2 | 69 | 20·6 | 293·0 | 145 | 62·8 | 429·8 | 221 | 105·0 | 752 | 400 | 204 |
| 21·2 | −6 | −21·1 | 158·0 | 70 | 21·1 | 294·8 | 146 | 63·3 | | | | | | |
| 23·0 | −5 | −20·6 | 159·8 | 71 | 21·7 | 296·6 | 147 | 63·9 | | | | | | |
| 24·8 | −4 | −20·0 | 161·6 | 72 | 22·2 | 298·4 | 148 | 64·4 | | | | | | |
| 26·6 | −3 | −19·4 | 163·4 | 73 | 22·8 | 300·2 | 149 | 65·0 | | | | | | |
| 28·4 | −2 | −18·9 | 165·2 | 74 | 23·3 | 302·0 | 150 | 65·6 | | | | | | |
| 30·2 | −1 | −18·3 | 167·0 | 75 | 23·9 | 303·8 | 151 | 66·1 | | | | | | |
| 32·0 | 0 | −17·8 | 168·8 | 76 | 24·4 | 305·6 | 152 | 66·7 | | | | | | |
| 33·8 | 1 | −17·2 | 170·6 | 77 | 25·0 | 307·4 | 153 | 67·2 | | | | | | |
| 35·6 | 2 | −16·7 | 172·4 | 78 | 25·6 | 309·2 | 154 | 67·8 | | | | | | |
| 37·4 | 3 | −16·1 | 174·2 | 79 | 26·1 | 311·0 | 155 | 68·3 | | | | | | |
| 39·2 | 4 | −15·6 | 176·0 | 80 | 26·7 | 312·8 | 156 | 68·9 | | | | | | |
| 41·0 | 5 | −15·0 | 177·8 | 81 | 27·2 | 314·6 | 157 | 69·4 | | | | | | |
| 42·8 | 6 | −14·4 | 179·6 | 82 | 27·8 | 316·4 | 158 | 70·0 | | | | | | |
| 44·6 | 7 | −13·9 | 181·4 | 83 | 28·3 | 318·2 | 159 | 70·6 | | | | | | |
| 46·4 | 8 | −13·3 | 183·2 | 84 | 28·9 | 320·0 | 160 | 71·1 | | | | | | |
| 48·2 | 9 | −12·8 | 185·0 | 85 | 29·4 | 321·8 | 161 | 71·7 | | | | | | |
| 50·0 | 10 | −12·2 | 186·8 | 86 | 30·0 | 323·6 | 162 | 72·2 | | | | | | |
| 51·8 | 11 | −11·7 | 188·6 | 87 | 30·6 | 325·4 | 163 | 72·8 | | | | | | |
| 53·6 | 12 | −11·1 | 190·4 | 88 | 31·1 | 327·2 | 164 | 73·3 | | | | | | |
| 55·4 | 13 | −10·6 | 192·2 | 89 | 31·7 | 329·0 | 165 | 73·9 | | | | | | |
| 57·2 | 14 | −10·0 | 194·0 | 90 | 32·2 | 330·8 | 166 | 74·4 | | | | | | |
| 59·0 | 15 | −9·4 | 195·8 | 91 | 32·8 | 332·6 | 167 | 75·0 | | | | | | |
| 60·8 | 16 | −8·9 | 197·6 | 92 | 33·3 | 334·4 | 168 | 75·6 | | | | | | |
| 62·6 | 17 | −8·3 | 199·4 | 93 | 33·9 | 336·2 | 169 | 76·1 | | | | | | |
| 64·4 | 18 | −7·8 | 201·2 | 94 | 34·4 | 338·0 | 170 | 76·7 | | | | | | |
| 66·2 | 19 | −7·2 | 203·0 | 95 | 35·0 | 339·8 | 171 | 77·2 | | | | | | |
| 68·0 | 20 | −6·7 | 204·8 | 96 | 35·6 | 341·6 | 172 | 77·8 | | | | | | |
| 69·8 | 21 | −6·1 | 206·6 | 97 | 36·1 | 343·4 | 173 | 78·3 | | | | | | |
| 71·6 | 22 | −5·6 | 208·4 | 98 | 36·7 | 345·2 | 174 | 78·9 | | | | | | |
| 73·4 | 23 | −5·0 | 210·2 | 99 | 37·2 | 347·0 | 175 | 79·4 | | | | | | |
| 75·2 | 24 | −4·4 | 212·0 | 100 | 37·8 | 348·8 | 176 | 80·0 | | | | | | |
| 77·0 | 25 | −3·9 | 213·8 | 101 | 38·3 | 350·6 | 177 | 80·6 | | | | | | |

## VALUES OF SINGLE DEGREES

| °C | | °F | °F | | °C |
|---|---|---|---|---|---|
| 1 | = | 1·8 | 1 | = | 0·56 |
| 2 | = | 3·6 | 2 | = | 1·11 |
| 3 | = | 5·4 | 3 | = | 1·67 |
| 4 | = | 7·2 | 4 | = | 2·22 |
| 5 | = | 9·0 | 5 | = | 2·78 |
| 6 | = | 10·8 | 6 | = | 3·33 |
| 7 | = | 12·6 | 7 | = | 3·89 |
| 8 | = | 14·4 | 8 | = | 4·44 |
| 9 | = | 16·2 | 9 | = | 5·0 |

$°C = \frac{5}{9}(°F - 32°)$ | $°F = (\frac{9}{5}\,°C) + 32°$

FIND THE KNOWN TEMPERATURE TO BE CONVERTED IN THE **CENTRE** COLUMN. THEN READ THE CENTIGRADE CONVERSION TO RIGHT AND FAHRENHEIT TO LEFT.

e.g. 50 10 −12·2

10°C = 50°F

10°F = −12·2°C

| ISSUE Nº | DATE |
|---|---|
| 1 | JUNE.54. |
| | |
| | |
| | |
| | |
| | |

COMPILED

TRACED

DOLTON DRAWING CO. 16-7-1953

APPROVED

DRAWING OFFICE DATA SHEET Nº 1/1B

# TEMPERATURE CONVERSION TABLES

# THE DE HAVILLAND AIRCRAFT COMPANY LTD. HATFIELD, HERTS.

THE LIMIT SYSTEM TABULATED BELOW IS REPRODUCED FROM B.S.S. 164 AND MUST BE ADHERED TO, THE "NEWALL" SYSTEM IS NOT TO BE USED. WHERE SPECIAL FITS OTHER THAN THOSE GIVEN BELOW ARE REQUIRED REFERENCE SHOULD BE MADE TO B.S.S. 164.

| RANGE OF DIAMETERS | BASIC HOLE "X" | | SHAFT "D" | | SHAFT "P" | | SHAFT "Q" | | SHAFT "R" | | SHAFT "S" | |
|---|---|---|---|---|---|---|---|---|---|---|---|---|
| | | | LIGHT DRIVE IN "X" HOLE | | PUSH FIT IN "X" HOLE | | EASY SLIDE OR CLOSE RUNNING IN "X" HOLE | | NORMAL RUNNING IN "X" HOLE | | SLACK RUNNING IN "X" HOLE | |
| | | | INTERFERENCE FIT | | TRANSITION FIT | | CLEARANCE FIT | | CLEARANCE FIT | | CLEARANCE FIT | |
| | LIMIT INCHES | TOL'CE INCHES | LIMIT INCHES | TOL'CE INCHES | LIMIT INCHES | TOL'CE INCHES | LIMIT INCHES | TOL'CE INCHES | LIMIT INCHES | TOL'CE INCHES | LIMIT INCHES | TOL'CE INCHES |
| 0 TO ".29 | +·0003<br>-·0003 | ·0006 | +·0003<br>+·0006 | ·0003 | -·0002<br>-·0005 | ·0003 | -·0005<br>-·0009 | ·0004 | -·0009<br>-·0015 | ·0006 | -·0015<br>-·0024 | ·0009 |
| ".3 TO ".59 | +·0004<br>-·0004 | ·0008 | +·0004<br>+·0008 | ·0004 | -·0002<br>-·0006 | ·0004 | -·0006<br>-·0012 | ·0006 | -·0012<br>-·0020 | ·0008 | -·0020<br>-·0032 | ·0012 |
| ".6 TO ".99 | +·0005<br>-·0005 | ·0010 | +·0005<br>+·0010 | ·0005 | -·0003<br>-·0008 | ·0005 | -·0008<br>-·0015 | ·0007 | -·0015<br>-·0025 | ·0010 | -·0025<br>-·0040 | ·0015 |
| 1".0 TO 1".49 | +·0006<br>-·0006 | ·0012 | +·0006<br>+·0012 | ·0006 | -·0003<br>-·0009 | ·0006 | -·0009<br>-·0018 | ·0009 | -·0018<br>-·0030 | ·0012 | -·0030<br>-·0048 | ·0018 |
| 1".5 TO 2".09 | +·0007<br>-·0007 | ·0014 | +·0007<br>+·0014 | ·0007 | -·0004<br>-·0011 | ·0007 | -·0011<br>-·0021 | ·0010 | -·0021<br>-·0035 | ·0014 | -·0035<br>-·0056 | ·0021 |
| 2".1 TO 2".79 | +·0008<br>-·0008 | ·0016 | +·0008<br>+·0016 | ·0008 | -·0004<br>-·0012 | ·0008 | -·0012<br>-·0024 | ·0012 | -·0024<br>-·0040 | ·0016 | -·0040<br>-·0064 | ·0024 |
| 2".8 TO 3".59 | +·0009<br>-·0009 | ·0018 | +·0009<br>+·0018 | ·0009 | -·0005<br>-·0014 | ·0009 | -·0014<br>-·0027 | ·0013 | -·0027<br>-·0045 | ·0018 | -·0045<br>-·0072 | ·0027 |
| 3".60 TO 4".49 | +·0010<br>-·0010 | ·0020 | +·0010<br>+·0020 | ·0010 | -·0005<br>-·0015 | ·0010 | -·0015<br>-·0030 | ·0015 | -·0030<br>-·0050 | ·0020 | -·0050<br>-·0080 | ·0030 |

THE RESULTANT "FITS" OBTAINED FROM THE ABOVE COMBINATION OF SHAFTS AND HOLES ARE ILLUSTRATED DIAGRAMMATICALLY ON DATA SHEET Nº 1/2B, WHERE THE HOLE AND SHAFT TOLERANCES ARE PLOTTED AGAINST ZERO FOR THE RANGE 0 TO 2".09. THE OBJECT OF THIS DIAGRAM IS TO GIVE A VISIBLE INDICATION OF THE TYPE OF FIT BEING CALLED FOR, FOR EXAMPLE:-

THE SMALLEST "D" SHAFT IS THE SAME SIZE AS THE LARGEST "X" HOLE, THEREFORE ANY INCREASE IN SHAFT "D" OR DECREASE IN HOLE "X" RESULTS IN AN INCREASING INTERFERENCE.

SIMILARLY, THE LARGEST "Q" SHAFT IN THE SMALLEST "X" HOLE WILL ALWAYS GIVE A CLEARANCE FIT. THE "XP" COMBINATION GIVES A RESULTANT FIT RANGING BETWEEN A CLEARANCE AND AN INTERFERENCE AND IS THEREFORE IN THE TRANSITION GROUP.

CLEARANCE HOLES. WHERE LIMIT HOLES ARE UNNECESSARY, i.e. REAMED HOLES, THE STANDARD CLEARANCE HOLES TABULATED ON DATA SHEET Nº 1/1 MUST BE ADHERED TO.

ALL BOLT HOLES THROUGH WOODEN COMPONENTS MUST BE 1/64" CLEARANCE, e.g. 17/64" DIA. FOR 1/4" DIA. BOLT.

| ISSUE Nº | DATE |
|---|---|
| 1 | 4-11-46 |
| 2 | JAN '53 |

COMPILED

TRACED
GARNET & Cº
26 - 2 - 47

APPROVED

LIMIT SYSTEM

DRAWING OFFICE DATA SHEET Nº 1/2 A

THE DE HAVILLAND AIRCRAFT COMPANY LTD. HATFIELD, HERTS.

HOLES ARE SHOWN THUS —— ▨

SHAFTS ARE SHOWN THUS —— ■

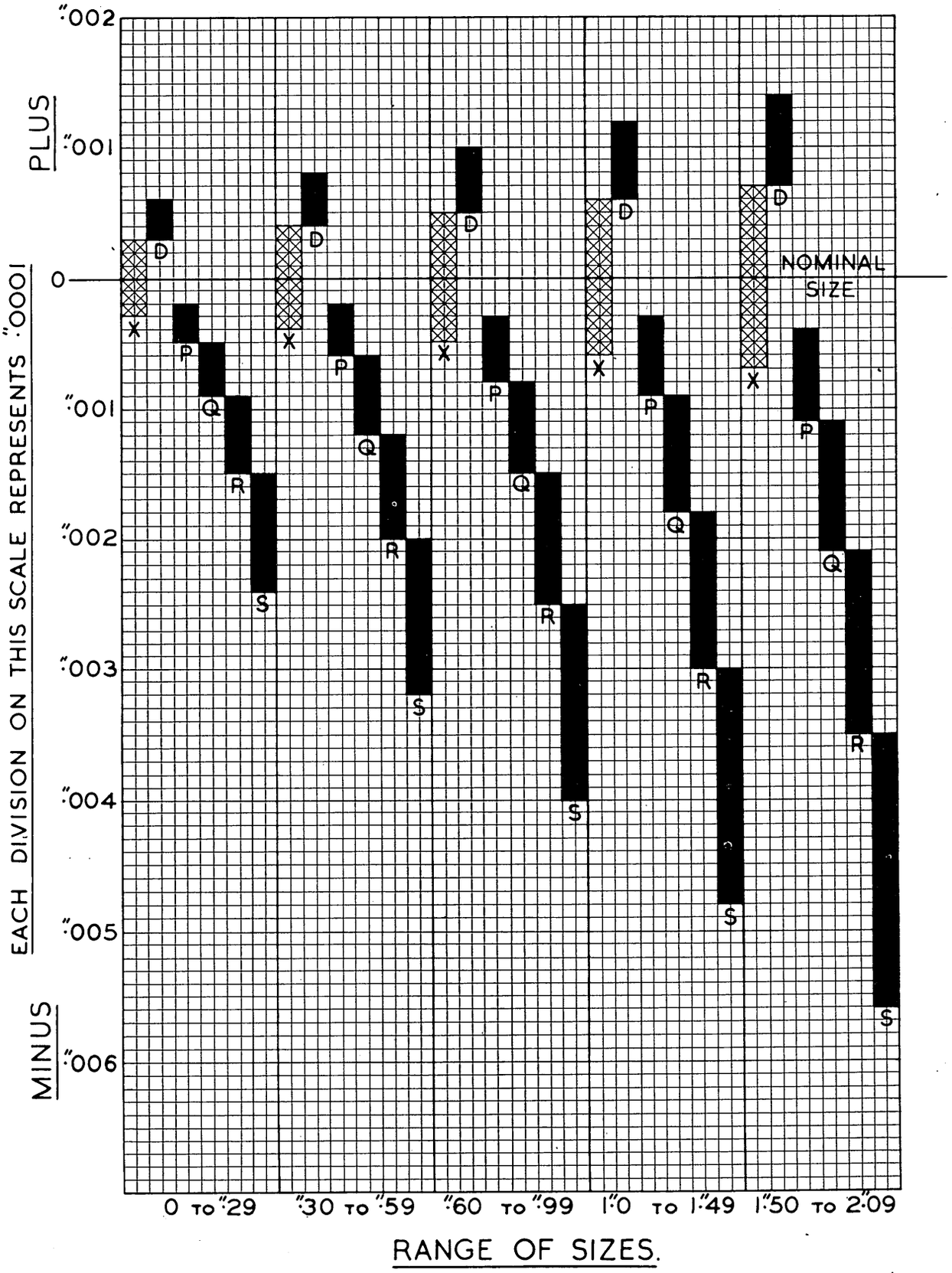


| ISSUE Nº | DATE |
|---|---|
| 1 | 4·11·46 |
| | |
| | |
| | |
| | |
| | |

COMPILED
L. SPENCER
TRACED.
GARNET & Co
26 - 2 - 47
APPROVED

LIMIT DIAGRAM

DRAWING OFFICE DATA SHEET Nº 1/2 B

35

## ALLOWANCES FOR PLATING

The effect of Cadmium and Hard Chrome Plating on limits must be carefully considered.

## CADMIUM PLATING

The specification thickness for cadmium plating is .0003 minimum, the effect of this coating being to increase a shaft diameter by .0006 and reduce a hole diameter by the same amount.

As it is difficult to obtain reamers and gauges to produce and measure this small amount over-size, Close Tolerance Holes and Shaft combinations i.e. "XQ" should have the cadmium omitted from the hole. A note "NO CADMIUM" with a suitable arrow to the hole/s in question will be added to the drawing.

Shafts (which do not require special gauges to check them) should be given the limits before and after Cadmium plating.

In cases where a better fit than a "clear hole" is used i.e. reamed holes to Class "X" limits in joint fittings in conjunction with A.25 or A.26 standard bolts, the holes need not be plugged as the bolt tolerance will accommodate the plating thickness. This type of hole should only quote:-

Ream 3/8" dia. + .0004
- .0004

N.B. Steel bolts through L.A. structural components must be Cadmium Plated.

## HARD CHROMIUM PLATING

The standard thickness of Hard Chrome plating to be used in the majority of design applications is .001, and as for Cadmium plating allowance must be made for this amount when giving limits.

Every endeavour in the case of holes should be made to use standard reamers to produce the basic unplated hole, this will entail quoting:-

(i) Standard limits for the hole BEFORE Hard Chrome Plating.

(ii) Non-standard limits AFTER plating allowing for a .002 reduction in diameter i.e. .001 each side.

The shaft fitting this hole must have a corresponding .002 allowance for the non-standard final diameter of the hole.

In some cases however the procedure of producing a standard hole before Hard Chrome plating and thereby avoiding the need for special reamers may be inapplicable as the shaft may also have to pick up another component, ball race etc., which has a standard hole. In these instances the following limits must be given:-

(i) The hole diameter BEFORE Hard Chrome Plating .002 larger than standard.

(ii) The standard hole diameter AFTER Hard Chrome

| ISSUE NO. | DATE |
|---|---|
| 2 | Aug.'55 |
| | |
| | |
| | |
| | |
| | |

COMPILED

TRACED

APPROVED

THE DE HAVILLAND AIRCRAFT COMPANY LTD., HATFIELD, HERTS. | D.H.S. 550

## GENERAL WORKSHOP LIMITS.

SHEET Nº 1 | Nº OF SHTS. 2.

THIS STANDARD RECORDS FOR PRODUCTION & INSPECTION DEPARTMENTS THE TOLERANCES THAT ARE CONSIDERED TO BE SATISFACTORY TO THE DESIGN OFFICE FOR STRENGTH, WEIGHT & WORKMANSHIP.

THE FOLLOWING LIMITS ARE TO APPLY TO ANY DIMENSIONS GIVEN ON DE HAVILLAND DRAWINGS WHERE A SPECIFIC TOLERANCE IS NOT GIVEN, BUT DO NOT APPLY TO PROPRIETARY PARTS, NOR TO COMPONENTS MANUFACTURED TO ANY OTHER RECOGNISED SYSTEM OF LIMITS.

WHERE SUCH LIMITS ARE NOT REGARDED AS SATISFACTORY TO THE D.O. THEN A SPECIFIC LIMIT MUST BE GIVEN, BUT ONLY IF NECESSARY.

### 1. MILLING. (EXCLUDING SPAR MILLING.)

1.1. ALL DIMENSIONS GOVERNING THE EXTERNAL FORM OF A MILLED DETAIL THIS INCLUDES WIDTH OF LUGS, OVERALL WIDTH OF FORK FITTING, DEPTH OF SLOTS & RADII ABOVE 3/64". — ± ".0075

1.2. WIDTH OF SLOTS. — + ".0075 / - 0
D.O. NOTE. MATED FORK & EYE FITTINGS MUST BE TOLERANCED ON DRAWINGS - GENERAL LIMITS TO BE USED:-
FORK SLOT. + ".005 / + ".0005
EYE END. - ".003 / - ".0005

1.3. OFFSET FROM CENTRE LINE OR DATUM e.g. A SLOT IN A FORK END OR LUG OF AN EYE END. — ".010

1.4. CORNER RADII - CONCAVE RADIUS (CONVEX CUTTER) } TOLERANCE ON DRAWING DIMENSION. — + ".010 / ".0
1.5. CORNER RADII - CONVEX RADIUS (CONCAVE CUTTER) } — - ".010 / 0
D.O. NOTE. MATED RADII MUST BE DIMENSIONED TO CLEAR i.e. LARGER DIA. ON CONVEX RADIUS.

1.6. ANGLES. (REF. - $\frac{1}{4}°$ = APPROX. ".009 ON 2"). — $+\frac{1}{4}°$ / $-\frac{1}{4}°$
D.O. NOTE. ON DETAIL WORK, ANGLES SHOULD ONLY BE GIVEN AS A REFERENCE. A DIMENSION SHOULD ALWAYS BE GIVEN WHERE ACCURACY IS REQUIRED.

### 2. TURNING & BORING.

2.1. EXTERNAL DIAMETERS, PARALLEL OR SPHERICAL (WITHIN 10" DIA.) (ABOVE 10" DIA. - ".001 PER IN. DIA.) — ± ".0075

2.2. INTERNAL DIAMETERS OF BORED OR DRILLED, CLEARANCE OR RELIEF HOLES (NOT STRUCTURAL BOLT OR RIVET HOLES.) — + ".010 / - ".005

2.3. CONCENTRICITY OF EXTERNAL &/OR INTERNAL DIAMETERS (WITHIN TOTAL INDICATOR READING.) — ".010

2.4. DEPTH OF BLIND BORED OR DRILLED HOLES. — ± ".010

2.5. OVERALL LENGTH OF TURNED DETAILS, THE LENGTH OF A PARALLEL, A TAPER OR A THREADED SECTION. — ± ".0075 PER FOOT

2.6. CORNER RADII - CONCAVE. — + ".010 / 0

2.7. CORNER RADII - CONVEX. — 0 / - ".010

2.8. CHAMFERS - LIMIT ON LENGTH. — 0 / - ".010
(NOT APPLICABLE TO THREADS ON HYDRAULIC JUNCTION BLOCKS & SIMILAR, FOR WHICH SEE D.H.S. 544.)

2.9. ANGLES, UP TO 2" LENGTH. — $\pm\frac{1}{4}°$

2.10. UNDERCUTS
INTERNAL - SEE D.H.S. 504. EXTERNAL - SEE D.H.S. 502-3
GASKET - SEE D.H.S. 505.

2.11. THREAD FORM PITCH ETC.
B.A., B.S. 93. BSF & BSP & B.S.P. TRUNCATED., BS. 84.
UNF, UNC, UNS & UN., B.S. 1580.

| ISSUE Nº | DATE |
|---|---|
| 1 | 3.3.55 |

COMPILED

TRACED

D.P.

APPROVED

GENERAL WORKSHOP LIMITS. | DRAWING OFFICE DATA SHEET Nº 1/2D

## 3. DRILLING & REAMING.

| | | |
|---|---|---|
| 3.1. | DIAMETER OF REAMED HOLES. BRITISH STANDARD BI-LATERAL 'X' HOLE. | B.S. 164 |
| 3.2 | DIAMETER OF DRILLED HOLES FOR RIVETS & BOLTS IN MAIN STRUCTURAL JOINTS (NOTE. DRAWING WILL IN FUTURE CALL UP 'X DIA. DRILLED BOLT HOLE', WHERE 'X' IS TO BE THE NOMINAL BOLT SIZE.) | + ·0005<br>+ ·004 |
| 3.3. | DIAMETER OF DRILLED HOLES FOR GENERAL WORK.<br>DRILL DIAMETER UP TO ·20 ——<br>" " ABOVE ·20 TO ·75 —<br>" " ABOVE ·75 —— | <br>+ ·0005<br>+ ·004<br>+ ·0005<br>+ ·0075<br>+ ·0005<br>+ ·010 |
| 3.4. | CENTRES OR DISTANCE FROM DATUM LINES OF REAMED OR DRILLED HOLES JIGGED FOR POSITION BUT WHERE COMPONENTS ARE BORED TOGETHER, ALSO LIGHTENING HOLES. | ± ·015 |
| 3.5. | CENTRES OF A GROUP OF DRILL HOLES JIGGED TO MATE TWO OR MORE SEPARATELY DRILLED COMPONENTS, ALSO A GROUP OF 'DRILL SIZE' HOLES PUNCHED WITH A PRESS TOOL.<br>UP TO ·2 DIA.<br>UP TO ·75 DIA. | <br>± ·002<br>± ·0035 |
| 3.6. | POSITION OF AN INDEPENDANT GROUP OF DRILLED OR PUNCHED HOLES RELATIVE TO A DATUM. | ± ·020 |
| 3.7. | CENTRES OF PRE-DRILLED PILOT HOLES FOR RIVETS. | ± ·015 |
| 3.8. | POSITION OF RIVET HOLE FROM TRUE LOCATION.<br>IMPORTANT. THE DIMENSION GIVEN ON DRAWING FROM EDGE OF SHEET IS TO BE THE MINIMUM. | ·020 |
| 3.9. | VARIATION IN PITCH OF A ROW OF EQUALLY SPACED RIVETS. | 5% OF ACTUAL PITCH. |
| 3.10. | DIAMETER OF SPOT FACE OR COUNTERBORE. | + ·010<br>− 0 |
| 3.11. | THICKNESS AFTER SPOT FACING OR COUNTERBORING. | + ·010<br>− ·005 |
| 3.12. | TOOLING HOLE CENTRES (NOT JIG LOCATION HOLES) FOR DRILL & ROUTER TEMPLATES - DEVIATION FROM LOFT PLATE POSITION OR DRAWING DIMENSION. | ± ·005 |

## 4. SHEET METAL DEVELOPMENT & FORMING.

| | | |
|---|---|---|
| 4.1. | ROUTED BLANKS & DEVELOPED SHEET BEFORE ANY FORMING OPERATION, ALSO DIMENSIONS OF STRETCHED, WHEELED OR FLAT PANELS AFTER TRIMMING & RADII ON CORNERS TO BE FLANGED ETC. - THE DEVIATION OF EACH EDGE OR FACE OUTSIDE THE LOFT LINE OR TRUE DIMENSION. | + ·03<br>0 |
| 4.2. | DIMENSIONS AFTER FLANGING - THE DEVIATION OF EACH HEEL LINE FROM LOFT LINE OR TRUE DIMENSION. | ± ·010 |
| 4.3. | DEPTH OF FLANGE. | + ·02<br>0 |
| 4.4. | INTERNAL BEND RADII | + ·02<br>0 |
| 4.5. | FLANGE ANGLES. | ± ½° |
| 4.6. | BEATEN OR WHEELED PARTS OR DROP HAMMER PRESSINGS - DEVIATION ON CONTOUR DIMENSIONS. FLANGED PRESSINGS OR FINAL DETAILS ——<br>UNFLANGED PRESSINGS (e.g. WHERE TRIMMING MAY BE DONE.) —— | ± ·02<br>+ ·05<br>0 |
| 4.7. | POSITION OF FLANGED LIGHTENING HOLES & SWAGES - FROM LOFT LINE OR TRUE DIMENSION. | ± ·02 |

| ISSUE Nº | DATE |
|---|---|
| 1 | 3.3.55 |

COMPILED

TRACED

D.P.

APPROVED.

# GENERAL WORKSHOP LIMITS.

DRAWING OFFICE DATA SHEET Nº 1/2E

# THE DE HAVILLAND AIRCRAFT COMPANY LTD., HATFIELD, HERTS.

## B.S.B. BS. BRASS.

| SIZE | DIA. | T.P.I. | PITCH | DEPTH OF THREAD | CORE DIA. | AREA FULL DIA. | CORE AREA | TAPPING DRILL SIZE |
|---|---|---|---|---|---|---|---|---|
| 1/8" | ·125 | 26 | ·03846 | ·02461 | ·0758 | ·0123 | ·00452 | 47 |
| 1/4" | ·25 | | | | ·2008 | ·0491 | ·0317 | 6 |
| 3/8" | ·375 | | | | ·3258 | ·1105 | ·0834 | Q |
| 1/2" | ·5 | | | | ·4508 | ·1964 | ·1596 | 29/64" |
| 5/8" | ·625 | | | | ·5758 | ·3068 | ·2604 | 37/64" |
| 3/4" | ·75 | | | | ·7008 | ·4418 | ·3858 | 45/64" |
| 7/8" | ·875 | | | | ·8258 | ·6 | ·5357 | 53/64" |
| 1" | 1·0 | | | | ·9508 | ·7854 | ·7101 | 61/64" |
| 1 1/8" | 1·125 | | | | 1·0758 | ·993 | ·9093 | 1 5/64" |
| 1 1/4" | 1·25 | | | | 1·2008 | 1·56 | 1·132 | 1 13/64" |
| 1 1/2" | 1·5 | | | | 1·4508 | 2·25 | 1·653 | 1 29/64" |

## B.A.

| SIZE | DIA | T.P.I | PITCH | DEPTH OF THREAD | CORE DIA | AREA FULL DIA. | CORE AREA | TAPPING DRILL SIZE |
|---|---|---|---|---|---|---|---|---|
| 10 | ·0669 | 72·6 | ·0138 | ·0083 | ·050 | ·0035 | ·0019 | 55 |
| 8 | ·0866 | 59·1 | ·0169 | ·0102 | ·066 | ·0058 | ·0034 | 51 |
| 6 | ·1102 | 47·9 | ·0209 | ·0126 | ·085 | ·0095 | ·0057 | 43 |
| 4 | ·1417 | 38·5 | ·026 | ·0156 | ·111 | ·0158 | ·0097 | 32 |
| 2 | ·185 | 31·4 | ·0319 | ·0191 | ·147 | ·0268 | ·0169 | 24 |

## B.S.F. BS. FINE

| SIZE | DIA | T.P.I | PITCH | DEPTH OF THREAD | CORE DIA | AREA FULL DIA. | CORE AREA | TAPPING DRILL SIZE |
|---|---|---|---|---|---|---|---|---|
| 1/4" | ·25 | 26 | ·03846 | ·0246 | ·2008 | ·0491 | ·0317 | No. 5 |
| 5/16" | ·3125 | 22 | ·04545 | ·0291 | ·2543 | ·0767 | ·0508 | F |
| 3/8" | ·375 | 20 | ·05 | ·032 | ·311 | ·1105 | ·0760 | O |
| 7/16" | ·4375 | 18 | ·05556 | ·0356 | ·3663 | ·1503 | ·1054 | U |
| 1/2" | ·5 | 16 | ·0625 | ·04 | ·42 | ·1964 | ·1385 | 27/64" |
| 9/16" | ·5625 | 16 | ·0625 | ·04 | ·4825 | ·2485 | ·1828 | 31/64" |
| 5/8" | ·625 | 14 | ·07143 | ·0457 | ·5336 | ·3068 | ·2236 | 35/64" |
| 3/4" | ·75 | 12 | ·08333 | ·0534 | ·6432 | ·4418 | ·3249 | 21/32" |
| 7/8" | ·875 | 11 | ·09091 | ·0582 | ·7586 | ·6013 | ·4520 | 25/32" |
| 1" | 1·0 | 10 | ·10 | ·064 | ·872 | ·7854 | ·5972 | 7/8" |

## B.S.W. BRITISH STANDARD WHITWORTH

| SIZE | DIA | T.P.I | PITCH | DEPTH OF THREAD | CORE DIA | AREA FULL DIA. | CORE AREA | TAPPING DRILL SIZE |
|---|---|---|---|---|---|---|---|---|
| 1/8" | ·125 | 40 | ·025 | ·016 | ·093 | ·0123 | ·0068 | 38 |
| 3/16" | ·1875 | 24 | ·04167 | ·0267 | ·1341 | ·0276 | ·0141 | 26 |
| 1/4" | ·25 | 20 | ·05 | ·032 | ·186 | ·0491 | ·0272 | 13/64" |
| 5/16" | ·3125 | 18 | ·05556 | ·0356 | ·2413 | ·0767 | ·0457 | F |
| 3/8" | ·375 | 16 | ·0625 | ·04 | ·295 | ·1105 | ·0683 | 8 M/M |
| 7/16" | ·4375 | 14 | ·07143 | ·0457 | ·3461 | ·1503 | ·0941 | U |
| 1/2" | ·5 | 12 | ·08333 | ·0534 | ·3932 | ·1964 | ·1214 | 10·5 M/M |
| 9/16" | ·5625 | 12 | ·08333 | ·0534 | ·4557 | ·2485 | ·1631 | 31/64" |
| 5/8" | ·625 | 11 | ·09091 | ·0582 | ·5086 | ·3068 | ·2032 | 17/32" |
| 3/4" | ·75 | 10 | ·1 | ·064 | ·622 | ·4418 | ·3039 | 16·5 M/M |
| 7/8" | ·875 | 9 | ·11111 | ·0711 | ·7328 | ·6013 | ·4218 | 49/64" |
| 1" | 1·0 | 8 | ·125 | ·08 | ·84 | ·7854 | ·5542 | 7/8" |
| 1 1/8" | 1·125 | 7 | ·14286 | ·0915 | ·942 | ·994 | ·6969 | BORE TO CORE DIA. |
| 1 1/4" | 1·25 | 7 | ·14286 | ·0915 | 1·067 | 1·2272 | ·8942 | |
| 1 1/2" | 1·5 | 6 | ·16667 | ·1067 | 1·2866 | 1·7671 | 1·3 | |
| 1 3/4" | 1·75 | 5 | ·2 | ·1281 | 1·4938 | 2·4053 | 1·753 | |
| 2" | 2·0 | 4·5 | ·22222 | ·1423 | 1·7154 | 3·1416 | 2·311 | |
| 2 1/4" | 2·25 | 4 | ·25 | ·1601 | 1·9298 | 3·9761 | 2·925 | |
| 2 1/2" | 2·5 | 4 | ·25 | ·1601 | 2·1798 | 4·9087 | 3·732 | |
| 2 3/4" | 2·75 | 3·5 | ·28571 | ·183 | 2·384 | 5·9396 | 4·464 | |
| 3" | 3·0 | 3·5 | ·28571 | ·183 | 2·634 | 7·0686 | 5·449 | |

## ACME

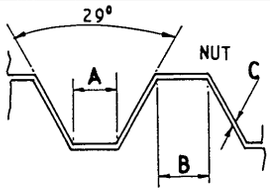


| SIZE | DIA. | T.P.I. | SCREW CORE AREA MIN | SCREW CORE MAX. | SCREW DIA MIN. | A NUT | B SCREW | C |
|---|---|---|---|---|---|---|---|---|
| 1/2" | ·5 | 10 | ·1104 | ·375 | ·380 | ·0319 | ·0371 | ·00065 |
| 5/8" | ·625 | 8 | ·1763 | ·4737 | ·480 | ·0411 | ·0463 | |
| 3/4" | ·75 | 6 | ·2419 | ·555 | ·563 | ·0566 | ·0618 | |
| 7/8" | ·875 | 6 | ·3632 | ·680 | ·688 | ·0566 | ·0618 | |
| 1" | 1·0 | 5 | ·4657 | ·770 | ·780 | ·0689 | ·0741 | |
| 1 1/8" | 1·125 | 5 | ·6291 | ·895 | ·905 | ·0689 | ·0741 | |
| 1 1/4" | 1·25 | 5 | ·8172 | 1·02 | 1·03 | ·0689 | ·0741 | |
| 1 3/8" | 1·375 | 4 | ·9365 | 1·092 | 1·105 | ·0875 | ·0927 | |
| 1 1/2" | 1·5 | 4 | 1·186 | 1·23 | 1·217 | ·0875 | ·0927 | |
| 1 3/4" | 1·75 | 4 | 1·69 | 1·467 | 1·48 | ·0875 | ·0927 | |
| 2" | 2·0 | 4 | 2·316 | 1·717 | 1·73 | ·0875 | ·0927 | |

## B.S.P. BRITISH STANDARD PIPE.

| SIZE B.S.P. | DIA. | T.P.I. | PITCH | DEPTH OF THREAD | CORE DIA | AREA FULL DIA | CORE AREA | TAPPING DRILL SIZE |
|---|---|---|---|---|---|---|---|---|
| 1/8" | ·383 | 28 | ·03571 | ·0229 | ·3372 | ·115 | ·0893 | R |
| 1/4" | ·518 | 19 | ·05263 | ·0337 | ·4506 | ·211 | ·1595 | 29/64" |
| (5/16") | ·6 | 19 | ·05263 | ·0337 | ·5326 | ·2827 | ·2222 | 35/64" |
| 3/8" | ·656 | 19 | ·05263 | ·0337 | ·5886 | ·338 | ·2721 | 19/32" |
| (7/16") | ·75 | 14 | ·07143 | ·0457 | ·6586 | ·441 | ·34 | 43/64" |
| 1/2" | ·825 | 14 | ·07143 | ·0457 | ·7336 | ·534 | ·4227 | 47/64" |
| 5/8" | ·902 | 14 | ·07143 | ·0457 | ·8106 | ·639 | ·5161 | 13/16" |
| 3/4" | 1·041 | 14 | ·07143 | ·0457 | ·9496 | ·85 | ·7082 | 31/32" |
| 7/8" | 1·189 | 14 | ·07143 | ·0457 | 1·0976 | 1·108 | ·9462 | 1 3/32" |
| 1" | 1·309 | 11 | ·09091 | ·0582 | 1·1926 | 1·345 | 1·117 | 1 3/16" |
| 1 1/4" | 1·65 | 11 | ·09091 | ·0582 | 1·5336 | 2·14 | 1·847 | BORE TO CORE DIAMETER |
| 1 1/2" | 1·882 | 11 | ·09091 | ·0582 | 1·7656 | 2·78 | 2·448 | |
| 1 3/4" | 2·116 | 11 | ·09091 | ·0582 | 1·9996 | 3·516 | 3·14 | |
| 2" | 2·347 | 11 | ·09091 | ·0582 | 2·2306 | 4·334 | 3·908 | |
| 2 1/4" | 2·587 | 11 | ·09091 | ·0582 | 2·4706 | 5·259 | 4·794 | |
| 2 1/2" | 2·96 | 11 | ·09091 | ·0582 | 2·8436 | 6·881 | 6·351 | |
| 2 3/4" | 3·21 | 11 | ·09091 | ·0582 | 3·0936 | 8·092 | 7·517 | |
| 3" | 3·46 | 11 | ·09091 | ·0582 | 3·3436 | 9·402 | 8·78 | |
| 3 1/2" | 3·95 | 11 | ·09091 | ·0582 | 3·8336 | 12·225 | 11·5426 | |
| 4" | 4·45 | 11 | ·09091 | ·0582 | 4·3336 | 15·552 | 14·7498 | |

## TRUNCATION TABLE FOR B.S. PIPE THREADS.

| BOLT MAJOR DIAMETER MAX. | TOL. | MIN. | NUT MINOR DIAMETER MAX. | TOL. | MIN. | SIZE B.S.P. |
|---|---|---|---|---|---|---|
| ·3777 | ·0048 | ·3729 | ·3483 | ·0058 | ·3425 | 1/8" |
| ·5102 | ·0057 | ·5045 | ·4681 | ·0097 | ·4584 | 1/4" |
| ·5922 | ·0057 | ·5865 | ·5496 | ·0097 | ·5399 | (5/16) |
| ·6482 | ·0057 | ·6425 | ·6061 | ·0097 | ·5964 | 3/8 |
| ·7394 | ·0067 | ·7327 | ·6823 | ·0107 | ·6716 | (7/16) |
| ·8144 | ·0067 | ·8077 | ·7549 | ·0107 | ·7442 | 1/2" |
| ·8914 | ·0067 | ·8847 | ·8319 | ·0107 | ·8212 | 5/8" |
| 1·0304 | ·0067 | 1·0237 | ·9709 | ·0107 | ·9602 | 3/4" |
| 1·1784 | ·0067 | 1·1717 | 1·1189 | ·0107 | 1·1082 | 7/8" |
| 1·2956 | ·0078 | 1·2878 | 1·2178 | ·0118 | 1·2060 | 1" |
| 1·6366 | ·0078 | 1·6288 | 1·5588 | ·0118 | 1·5470 | 1 1/4" |
| 1·8686 | ·0078 | 1·8608 | 1·7908 | ·0118 | 1·7790 | 1 1/2" |
| 2·1026 | ·0078 | 2·0948 | 2·0248 | ·0118 | 2·0130 | 1 3/4" |
| 2·3336 | ·0078 | 2·3258 | 2·2558 | ·0118 | 2·2440 | 2" |
| 2·5736 | ·0078 | 2·5658 | 2·4958 | ·0118 | 2·4840 | 2 1/4" |
| 2·9466 | ·0078 | 2·9388 | 2·8688 | ·0118 | 2·8570 | 2 1/2" |
| 3·1966 | ·0078 | 3·1888 | 3·1188 | ·0118 | 3·1070 | 2 3/4" |
| 3·4466 | ·0078 | 3·4388 | 3·3688 | ·0118 | 3·3570 | 3" |
| 3·9366 | ·0078 | 3·9288 | 3·8588 | ·0118 | 3·8470 | 3 1/2" |
| 4·4366 | ·0078 | 4·4288 | 4·3588 | ·0118 | 4·3470 | 4" |

## SPECIAL THREADS T.D.O. STANDARD STD. 35.

| DIA. | T.P.I. | TYPE | HAND | DIA. | T.P.I. | TYPE | HAND | DIA. | T.P.I. | TYPE | HAND | DIA. | T.P.I. | TYPE | HAND |
|---|---|---|---|---|---|---|---|---|---|---|---|---|---|---|---|
| ·125 | | BRIGGS | R H | ·75 | 10 | ACME | R H | 1·45 | 20 | WHIT. | R H | 2·625 | 14 | WHIT. | R H |
| ·138 | 32 | Nº 6 A.N.C. | R H | ·75 | 2 START WHIT. | ·166L ·083P | L H | 1·5 | 14 | WHIT. | R H | 2·75 | 16 | WHIT. | R H |
| 5 M/M | ·75 M/M | METRIC | R H | ·75 | 14 | B.S.P. (7/16) | LH & RH | 1·5 | 16 | WHIT. | R H | 2·875 | 20 | WHIT. | R H |
| ·25 | | BRIGGS | R H | ·75 | 16 | WHIT. | R H | 1·5 | 20 | WHIT. | R H | 3·0 | 16 | WHIT. | R H |
| ·25 | 20 | A.N.C. | R H | ·75 | 19 | WHIT. | R H | 1·562 | 26 | WHIT. | R H | 3·1 | 16 | WHIT. | R H |
| ·309/311 | 32 | 1 TYRE STD | R H | ·75 | 20 | WHIT. | R H | 1·58 | 16 | WHIT. | R H | 3·21 | 11 | B.S.P. (2 3/4) | R H |
| ·3125 | 16 | WHIT. | R H | ·7969 | 26 | WHIT. | R H | 1·6 | 20 | WHIT. | R H | 3·4 | 16 | WHIT. | R H |
| 8 M/M | 1 M/M | METRIC. | R H | ·8 | 20 | WHIT. | R H | 1·6 | 2 START ACME | ·33L ·16P | R H | 3·4 | 20 | WHIT. | R H |
| ·325 | 26 | WHIT. | R H | ·8134 | 6 | WHIT. | R H | 1·625 | 16 | WHIT. | R H | 3·5 | 16 | WHIT. | R H |
| Nº 10 | 32 | A.N.F. | R H | ·875 | 5 | ACME | R H | 1·7 | 20 | WHIT. | R H | 3·6 | 16 | WHIT. | R H |
| ·375 | 24 | A.N.F. | R H | ·875 | 14 | WHIT. | R H | 1·75 | 16 | WHIT. | R H | 3·77 | 20 | WHIT. | R H |
| ·375 | 2 START WHIT. | ·125L ·062P | LH & RH | ·875 | 16 | WHIT. | LH & RH | 1·75 | 20 | WHIT. | R H | 3·8 | 16 | WHIT. | R H |
| ·375 | | BRIGGS | R H | ·875 | 20 | WHIT. | R H | 1·8 | 10 | WHIT. | R H | 4·0 | 11 | WHIT. | R H |
| ·375 | 12 | ACME 3 START | R H | ·875 | 2 START WHIT. | ·222L ·111P | R H | 1·8 | 20 | WHIT. | R H | 4·25 | 16 | WHIT. | R H |
| 12 M/M | 1·5 M/M | METRIC | R H | ·92 | 26 | WHIT. | R H | 1·9 | 20 | WHIT. | R H | 4·4 | 16 | WHIT. | R H |
| ·4375 | | B.S.F. | L H | ·937 | 11 | WHIT. | R H | 1·99 | 26 | WHIT. | R H | 4·75 | 11 | WHIT. | R H |
| ·5 | | BRIGGS | R H | ·939 | 20 | WHIT. | R H | 2·0 | 16 | WHIT. | R H | 5·125 | 16 | WHIT. | R H |
| ·5 | 5 | ACME | R H | 1·0 | | BRIGGS | R H | 2·0 | 20 | WHIT. | R H | 5·3 | 11 | WHIT. | R H |
| ·5 | 8 | ACME | R H | 1·0 | 16 | WHIT. | R H | 2·035 | 16 | WHIT. | R H | 6·1 | 16 | WHIT. | R H |
| ·5 | 20 | WHIT. | R H | 1·0 | 20 | WHIT. | LH & RH | 2·047 | 16 | WHIT. | R H | 6·5 | 16 | WHIT. | R H |
| ·5 | 20 | WHIT. | L H | 1·05 | 26 | WHIT. | R H | 2·1 | 20 | WHIT. | R H | 6·7 | 16 | WHIT. | R H |
| ·518 | 19 | B.S.P. | L H | 1·1 | 20 | WHIT. | R H | 2·18 | 26 | WHIT. | R H | 6·75 | 16 | WHIT. | R H |
| | | | | 1·1875 | 11 | WHIT. | R H | 2·185 | 11 | WHIT. | R H | 6·8 | 16 | WHIT. | R H |
| ·6 | 19 | B.S.P. (5/16) | R H | 1·2 | 20 | WHIT. | R H | 2·2 | 20 | WHIT. | R H | | | | |
| ·62 | 2 START WHIT. | ·142 8L ·071 4P | R H | 1·25 | 16 | WHIT. | R H | 2·25 | 12 | WHIT. | R H | | | | |
| ·625 | 11 | WHIT. 2 START | LH & RH | 1·25 | 20 | WHIT. | R H | 2·3 | 20 | WHIT. | R H | | | | |
| ·625 | 18 | A.N.F | R H | 1·30 | 20 | WHIT. | R H | 2·3125 | 20 | WHIT. | R H | | | | |
| ·675 | 26 | WHIT. | R H | 1·325 | 10 | WHIT. | L H | 2·4 | 26 | WHIT. | R H | | | | |
| ·692 | 24 | WHIT. | R H | 1·375 | 11 | WHIT. | LH & RH | 2·4375 | 16 | WHIT. | R H | | | | |
| 18 M/M | 1·5 M/M | METRIC | R H | 1·375 | 16 | WHIT. | R H | 2·5 | 8 | WHIT. | R H | | | | |
| ·75 | | BRIGGS | R H | 1·375 | 20 | WHIT. | R H | 2·5 | 20 | WHIT. | R H | | | | |
| ·75 | 6 | ACME | R H | 1·414 | 20 | WHIT. | R H | 2·6 | 20 | WHIT. | R H | | | | |

TAPS–INTERFERANCE FITS FOR STUDS

| | | | |
|---|---|---|---|
| 2 BA | STUD | BS 1171 SIZE 'E' | R H |
| 1/4 BSF | STUD | | R H |

| ISSUE Nº | DATE |
|---|---|
| 1 | JUNE 54 |

COMPILED: L. SPENCER.

TRACED: M.T.

APPROVED:

# SCREW THREADS.

DRAWING OFFICE DATA SHEET Nº 1/3A

1. SCREW THREAD SPECIFICATIONS.

The majority of screw threads conform to one of the following specifications :-
B.S. 84. SCREW THREAD OF WHITWORTH FORM. (B.S.F. B.S.W. B.S.P. & B.S.B.).
B.S. 93. BRITISH ASSOCIATION SCREW THREADS. (B.A.).
B.S. 1104. GENERAL PURPOSE 'ACME' SCREW THREADS.
B.S. 1580. UNIFIED SCREW THREADS (special threads only are covered in these notes).

2. FITS.

SPECIFICATION B.S. 84 provides for three grades of fit :-

CLOSE FIT. Applicable to screw threads requiring a fine snug fit. This grade of fit is obtainable consistently only by use of the highest quality screwing tools. It should be used only where extreme accuracy of pitch and form are required.

MEDIUM FIT. Applicable to good class engineering work in general. Where clearance must be kept down. The majority of general purpose aircraft threads are in this category.

FREE FIT. Applicable to the majority of commercial screw threads also B.S.F. Nuts for aircraft.

Where drawings do not call for a specific grade of fit, B.S.F. (External) B.S.W. & B.S.B. threads will be produced with medium fit and B.S.F. (Internal) and B.S.P. with free fit. For special applications e.g. Screw jacks, Undercarriage Mechanisms and certain Adjustable Joints where end play must be reduced to the minimum, it is important that the required grade of fit is quoted on the drawing.

SPECIFICATIONS B.S. 93 & 1104. provide only one grade of fit which need not be quoted. Only even sizes of B.A. threads, excluding O.B.A. are to be used.

3. TRUNCATED THREADS.

All pipe couplings and unions having B.S.P. threads will be truncated to B.S. 84 Amendment 3. The dimension given in table should be quoted.

4. SPECIAL SCREW THREADS.

In the smaller diameters up to 1½ in., B.S.P. and B.S.B. threads must be used whenever possible. Tolerances after plating where applicable, to B.S. 84 - 'Medium Fit'.

Any other special threads must be chosen from S.T.D. 35 shown in the table for reference, for which gauges and cutting tools are available.

Where no suitable thread size is available, any new size must be chosen from Table 16 to B.S. 1580 SELECTED SERIES, UNIFIED SPECIAL THREADS (U.N.S.). Tolerances for general use and after plating where applicable, to B.S. 1580 Class 2A for external and 2B for internal threads. Typical designation 7/8 - 20 UNS - 2A (Class 3A and 3B may be used for special threads requiring a fine snug fit, as B.S.84 close fit in 2 above.)

Threads of non-standard diameter will be Unified form, the pitch being selected from the series 36, 28, 20, 16, 12, 8, 4, T.P.I.
Typical designation: 3.83 - 16 UN - 2B.

5. MULTIPLE START THREADS.

Where this type of thread is used the size, pitch, lead and thread form must be quoted e.g. 2 in. dia. - 3 start thread. Whitworth form .3 in. lead, .1 in. pitch.

6. NOTE.

Drawings of screw threads must not carry cross references to mating parts, but must be called up by the correct designation for each thread with the required fit where necessary.

| ISSUE Nº | DATE |
|---|---|
| 1 | JUNE '54 |
| | |
| | |
| | |
| | |
| | |
| COMPILED | |
| | |
| TRACED | |
| | |
| APPROVED | |

## BOLTS.

THE FOLLOWING DATA SHEETS LIST A COMPREHENSIVE RANGE OF STANDARD BOLTS WHICH MUST BE USED WHEREVER POSSIBLE. NOTE THAT STANDARD MILD STEEL BOLTS ARE OBSOLETE AND MUST NOT BE CALLED UP ON NEW OR MODIFICATION DESIGN WORK (REF. SDM 136)

## SPECIAL REQUIREMENTS

(1) BOLTS & NUTS REQUIRED TO BE WIRE LOCKED WILL BE CALLED UP BY THEIR STANDARD REFERENCE / D.H.S. 514.D. WHICH REQUIRES THEM TO BE PREDRILLED IN A STANDARD RANGE OF TOOLS AVAILABLE ON PRODUCTION.

(2) WHERE VARIATIONS OF PLAIN & THREADED SHANK ARE REQUIRED THE BOLT MUST BE DETAILED AND INCORPORATE THE 'SPECIAL' IDENTIFICATION DISC ON THE HEAD. DO NOT STATE 'MAKE FROM ..... (A STANDARD BOLT)' AS THE MAJORITY OF STANDARD BOLTS HAVE ROLLED THREADS WHICH CANNOT BE ADJUSTED.

(3) THE RAISED DISC (SEE DETAIL BELOW) MUST BE INCORPORATED ON ALL SPECIAL BOLTS THAT COULD OTHERWISE BE MISTAKEN FOR A STANDARD BOLT. e.g. AS IN (2) ABOVE, OR ON A BOLT OF STANDARD DIMENSIONS BUT OF SPECIAL MATERIAL. THE RAISED DISC IS NOT NECESSARY ON A CIRCULAR HEAD HAVING TWO MILLED SPANNER FLATS, OR SHOULDERED BOLTS, WHICH ARE EASILY IDENTIFIED AS SPECIAL.

(4) WHERE A FULL THREAD UP TO A SHOULDER OR A BOLT HEAD IS REQUIRED AN UNDERCUT MUST BE CALLED FOR (SEE DATA SHEET 1/34) ALTERNATIVELY AN ALLOWANCE OF TWO FULL THREADS MUST BE MADE FOR THE THREAD RUNOUT.

AN UNDERCUT IS PARTICULARLY DESIRABLE WHERE THREADS ARE TO BE ROLLED. ALSO ON SUPER H.T.S. BOLTS.

(5) SUPER H.T.S. BOLTS MUST BE MACHINED ALL-OVER (ref NOTE ON DATA SHEET III/7). THE ONLY PART NOT NORMALLY MACHINED IS THE HEXAGON HEAD. IT IS RECOMMENDED THAT BOLTS OVER 55 TONS U.T.S. HAVE A ROUND HEAD WITH TWO MILLED SPANNER FLATS OR, IF TWO ARE INSUFFICIENT, HAVE FOUR FLATS MACHINED SQUARE ON A HEAD DIAMETER EQUIVALENT TO STANDARD 'ACROSS CORNERS' DIMENSION.

(6) WHERE NUTS ARE REQUIRED TO BE LOCKED BY PEENING THE BOLT END, CALL UP 'LOCK TO D.H.S. 514.A.'

| ISSUE Nº | DATE |
|---|---|
| 1 | OCT. '50 |
| | |
| | |
| | |
| | |
| | |
| DRAWN | |
| | |
| TRACED | |
| DOLTON DRAWING Co 16 - 10 - 1950 | |
| APPROVED | |

IDENTIFICATION FOR SPECIAL BOLTS

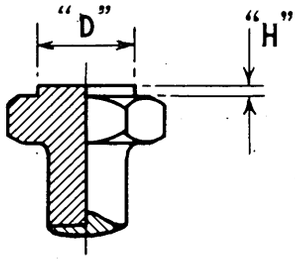


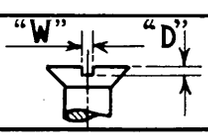


STANDARD SCREWDRIVER SLOTS

| BOLT SIZE FULL HEAD | 4 BA | 2 BA | 1/4" BSF | 5/16" BSF | 3/8" BSF | 7/16" BSF | 1/2" BSF |
|---|---|---|---|---|---|---|---|
| STANDARD HEX. A/F | | ·319 ·324 | ·438 ·445 | ·518 ·525 | ·592 ·600 | ·702 ·710 | ·812 ·820 |
| STANDARD HEX. A/C | | ·37 | ·51 | ·61 | ·69 | ·82 | ·95 |
| DIAMETER "D" | | ·25 | ·31 | ·38 | ·44 | ·50 | ·56 |
| HEIGHT "H" | | ·03 | ·03 | ·05 | ·05 | ·05 | ·05 |
| WIDTH "W" | ·03 | ·04 | ·05 | ·06 | ·08 | ·09 | ·10 |
| DEPTH "D" | ·03 | ·04 | ·06 | ·07 | ·08 | ·10 | ·11 |

**BOLTS.** GENERAL NOTES.

DRAWING OFFICE DATA SHEET Nº 1/4A

# THE DE HAVILLAND AIRCRAFT COMPANY LTD., HATFIELD, HERTS.

| PLAIN LENGTH "L" | SUFFIX CODES FOR LENGTH & DIAMETER | | | | | | | | | | | | |
|---|---|---|---|---|---|---|---|---|---|---|---|---|---|
| BOLT SIZE | 6 B.A. | 4 B.A. | 2 B.A. | 1/4" B.S.F. | 5/16" B.S.F. | 3/8" B.S.F. | 7/16" B.S.F. | 1/2" B.S.F. | 9/16" B.S.F. | 5/8" B.S.F. | 3/4" B.S.F. | 7/8" B.S.F. | 1" B.S.F |
| ·1 | 1A | 1B | 1C | 1E | 1G | | | | | | | | |
| ·2 | 2A | 2B | 2C | 2E | 2G | 2J | 2L | 2N | 2P | 2Q | 2S | 2U | 2W |
| ·3 | 3A | 3B | 3C | 3E | 3G | 3J | 3L | 3N | 3P | 3Q | 3S | 3U | 3W |
| ·4 | 4A | 4B | 4C | 4E | 4G | 4J | 4L | 4N | 4P | 4Q | 4S | 4U | 4W |
| ·5 | 5A | 5B | 5C | 5E | 5G | 5J | 5L | 5N | 5P | 5Q | 5S | 5U | 5W |
| ·6 | 6A | 6B | 6C | 6E | 6G | 6J | 6L | 6N | 6P | 6Q | 6S | 6U | 6W |
| ·7 | 7A | 7B | 7C | 7E | 7G | 7J | 7L | 7N | 7P | 7Q | 7S | 7U | 7W |
| ·8 | 8A | 8B | 8C | 8E | 8G | 8J | 8L | 8N | 8P | 8Q | 8S | 8U | 8W |
| ·9 | 9A | 9B | 9C | 9E | 9G | 9J | 9L | 9N | 9P | 9Q | 9S | 9U | 9W |
| 1·0 | 10A | 10B | 10C | 10E | 10G | 10J | 10L | 10N | 10P | 10Q | 10S | 10U | 10W |
| 1·1 | 11A | 11B | 11C | 11E | 11G | 11J | 11L | 11N | 11P | 11Q | 11S | 11U | 11W |
| 1·2 | 12A | 12B | 12C | 12E | 12G | 12J | 12L | 12N | 12P | 12Q | 12S | 12U | 12W |
| 1·3 | 13A | 13B | 13C | 13E | 13G | 13J | 13L | 13N | 13P | 13Q | 13S | 13U | 13W |
| 1·4 | 14A | 14B | 14C | 14E | 14G | 14J | 14L | 14N | 14P | 14Q | 14S | 14U | 14W |
| 1·5 | 15A | 15B | 15C | 15E | 15G | 15J | 15L | 15N | 15P | 15Q | 15S | 15U | 15W |
| 1·6 | 16A | 16B | 16C | 16E | 16G | 16J | 16L | 16N | 16P | 16Q | 16S | 16U | 16W |
| 1·7 | 17A | 17B | 17C | 17E | 17G | 17J | 17L | 17N | 17P | 17Q | 17S | 17U | 17W |
| 1·8 | 18A | 18B | 18C | 18E | 18G | 18J | 18L | 18N | 18P | 18Q | 18S | 18U | 18W |
| 1·9 | 19A | 19B | 19C | 19E | 19G | 19J | 19L | 19N | 19P | 19Q | 19S | 19U | 19W |
| 2·0 | 20A | 20B | 20C | 20E | 20G | 20J | 20L | 20N | 20P | 20Q | 20S | 20U | 20W |
| 2·1 | 21A | 21B | 21C | 21E | 21G | 21J | 21L | 21N | 21P | 21Q | 21S | 21U | 21W |
| 2·2 | 22A | 22B | 22C | 22E | 22G | 22J | 22L | 22N | 22P | 22Q | 22S | 22U | 22W |
| 2·3 | 23A | 23B | 23C | 23E | 23G | 23J | 23L | 23N | 23P | 23Q | 23S | 23U | 23W |
| 2·4 | 24A | 24B | 24C | 24E | 24G | 24J | 24L | 24N | 24P | 24Q | 24S | 24U | 24W |
| 2·5 | 25A | 25B | 25C | 25E | 25G | 25J | 25L | 25N | 25P | 25Q | 25S | 25U | 25W |
| 2·6 | 26A | 26B | 26C | 26E | 26G | 26J | 26L | 26N | 26P | 26Q | 26S | 26U | 26W |
| 2·7 | 27A | 27B | 27C | 27E | 27G | 27J | 27L | 27N | 27P | 27Q | 27S | 27U | 27W |
| 2·8 | | 28B | 28C | 28E | 28G | 28J | 28L | 28N | 28P | 28Q | 28S | 28U | 28W |
| 2·9 | | 29B | 29C | 29E | 29G | 29J | 29L | 29N | 29P | 29Q | 29S | 29U | 29W |
| 3·0 | | 30B | 30C | 30E | 30G | 30J | 30L | 30N | 30P | 30Q | 30S | 30U | 30W |
| 3·1 | | 31B | 31C | 31E | 31G | 31J | 31L | 31N | 31P | 31Q | 31S | 31U | 31W |
| 3·2 | | 32B | 32C | 32E | 32G | 32J | 32L | 32N | 32P | 32Q | 32S | 32U | 32W |
| 3·3 | | 33B | 33C | 33E | 33G | 33J | 33L | 33N | 33P | 33Q | 33S | 33U | 33W |
| 3·4 | | 34B | 34C | 34E | 34G | 34J | 34L | 34N | 34P | 34Q | 34S | 34U | 34W |
| 3·5 | | 35B | 35C | 35E | 35G | 35J | 35L | 35N | 35P | 35Q | 35S | 35U | 35W |
| 3·6 | | 36B | 36C | 36E | 36G | 36J | 36L | 36N | 36P | 36Q | 36S | 36U | 36W |
| 3·7 | | 37B | 37C | 37E | 37G | 37J | 37L | 37N | 37P | 37Q | 37S | 37U | 37W |
| 3·8 | | 38B | 38C | 38E | 38G | 38J | 38L | 38N | 38P | 38Q | 38S | 38U | 38W |
| 3·9 | | 39B | 39C | 39E | 39G | 39J | 39L | 39N | 39P | 39Q | 39S | 39U | 39W |
| 4·0 | | 40B | 40C | 40E | 40G | 40J | 40L | 40N | 40P | 40Q | 40S | 40U | 40W |
| 4·1 | | 41B | 41C | 41E | 41G | 41J | 41L | 41N | 41P | 41Q | 41S | 41U | 41W |
| 4·2 | | 42B | 42C | 42E | 42G | 42J | 42L | 42N | 42P | 42Q | 42S | 42U | 42W |
| 4·3 | | 43B | 43C | 43E | 43G | 43J | 43L | 43N | 43P | 43Q | 43S | 43U | 43W |
| 4·4 | | 44B | 44C | 44E | 44G | 44J | 44L | 44N | 44P | 44Q | 44S | 44U | 44W |
| 4·5 | | 45B | 45C | 45E | 45G | 45J | 45L | 45N | 45P | 45Q | 45S | 45U | 45W |
| 4·6 | | 46B | 46C | 46E | 46G | 46J | 46L | 46N | 46P | 46Q | 46S | 46U | 46W |
| 4·7 | | 47B | 47C | 47E | 47G | 47J | 47L | 47N | 47P | 47Q | 47S | 47U | 47W |
| 4·8 | | 48B | 48C | 48E | 48G | 48J | 48L | 48N | 48P | 48Q | 48S | 48U | 48W |
| 4·9 | | 49B | 49C | 49E | 49G | 49J | 49L | 49N | 49P | 49Q | 49S | 49U | 49W |
| 5·0 | | 50B | 50C | 50E | 50G | 50J | 50L | 50N | 50P | 50Q | 50S | 50U | 50W |
| 5·1 | | 51B | 51C | 51E | 51G | 51J | 51L | 51N | 51P | 51Q | 51S | 51U | 51W |
| 5·2 | | 52B | 52C | 52E | 52G | 52J | 52L | 52N | 52P | 52Q | 52S | 52U | 52W |
| 5·3 | | 53B | 53C | 53E | 53G | 53J | 53L | 53N | 53P | 53Q | 53S | 53U | 53W |
| 5·4 | | | | 54E | 54G | 54J | 54L | 54N | 54P | 54Q | 54S | 54U | 54W |
| 5·5 | | | | | | | | | 55P | 55Q | 55S | 55U | 55W |
| 5·6 | | | | | | | | | 56P | 56Q | 56S | 56U | 56W |

I. STANDARD BOLTS ARE CALLED UP IN PLAIN LENGTH ("L") INCREMENTS OF ·1

EXAMPLE: A BOLT WITH ·5 PLAIN LENGTH WILL BE :-

'PART Nº FOR BOLT TYPE'/ 5 /'CODE LETTER FOR BOLT DIA.'

II. CERTAIN D.H.S. BOLTS HOWEVER ARE AVAILABLE IN PLAIN LENGTH ("L") INCREMENTS OF ·05 OR HALF SIZES.

EXAMPLE: A BOLT WITH ·55 PLAIN LENGTH WILL BE :-

'PART Nº FOR BOLT TYPE'/ 5½ /'CODE LETTER FOR BOLT DIA.'

| ISSUE Nº | DATE |
|---|---|
| 1 | OCT.'50 |
| | |
| | |
| | |

COMPILED
L. SPENCER

TRACED
DOLTON DRAWING Co.
10. 11. 1950

APPROVED

# BOLTS — PART NUMBER CODES

# THE DE HAVILLAND AIRCRAFT COMPANY LTD., HATFIELD, HERTS.

| PART Nº PREFIX | MATERIAL | SPEC. | FINISH |
|---|---|---|---|
| A.25 | H.T.S. | S.96 | CADMIUM |
| A.26 | H.T.S. STAINLESS | S.80 | —— |

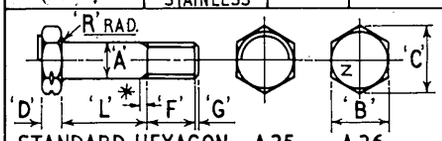


STANDARD HEXAGON A25 A26

| A.61 | LIGHT ALLOY | L.65 | ANODIC (GREEN) |
|---|---|---|---|

(AVAILABLE IN SIZES FROM 4 B.A. TO 5/8 B.S.F. INCL. ONLY)

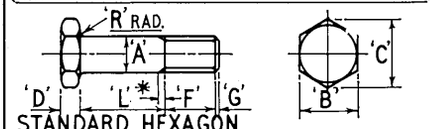


STANDARD HEXAGON

| BOLT SIZE. | 6 B.A | 4 B.A. | 2 B.A. | 1/4" B.S.F. | 5/16" B.S.F. | 3/8" B.S.F. | 7/16" B.S.F. | 1/2" B.S.F. | 9/16" B.S.F. | 5/8" B.S.F. | 3/4" B.S.F. | 7/8" B.S.F. | 1" B.S.F. |
|---|---|---|---|---|---|---|---|---|---|---|---|---|---|
| IDENT. LETTER | A | B | C | E | G | J | L | N | P | Q | S | U | W |
| 'A' DIA. | ·1072 ·1102 | ·1387 ·1417 | ·1820 ·1850 | ·2465 ·2495 | ·3090 ·3120 | ·3715 ·3745 | ·4335 ·4370 | ·4960 ·4995 | ·5585 ·5620 | ·6205 ·6245 | ·7455 ·7495 | ·8705 ·8745 | ·9955 ·9995 |
| 'F' | ·29 | ·33 | ·37 | ·42 | ·47 | ·57 | ·61 | ·71 | ·76 | ·85 | 1·14 | 1·34 | 1·44 |
| 'B' | ·188 ·193 | ·243 ·248 | ·319 ·324 | ·438 ·445 | ·518 ·525 | ·592 ·600 | ·702 ·710 | ·812 ·820 | ·912 ·920 | 1·000 1·010 | 1·190 1·200 | 1·288 1·300 | 1·468 1·480 |
| 'C' | ·22 | ·29 | ·37 | ·51 | ·61 | ·69 | ·82 | ·95 | 1·06 | 1·17 | 1·39 | 1·50 | 1·71 |
| 'D' | ·063 ·068 | ·080 ·086 | ·106 ·113 | ·14 ·15 | ·17 ·18 | ·21 ·22 | ·26 ·27 | ·29 ·30 | ·34 ·35 | ·38 ·39 | ·47 ·48 | ·52 ·53 | ·61 ·62 |
| 'R' | ·005 ·015 | ·005 ·015 | ·010 ·020 | ·015 ·030 | ·015 ·030 | ·015 ·030 | ·015 ·030 | ·015 ·030 | ·015 ·030 | ·015 ·030 | ·015 ·030 | ·015 ·030 | ·015 ·030 |
| 'G' | ·015 ·020 | ·020 ·030 | ·03 ·04 | ·03 ·04 | ·03 ·04 | ·03 ·04 | ·04 ·05 | ·04 ·05 | ·04 ·05 | ·05 ·06 | ·065 ·075 | ·065 ·075 | ·065 ·075 |
| 'L' +·04 −·0 | 1/2 TO ·1 ·1 TO 2·7 | 1/2 TO ·1 ·1 TO 5·3 | 1/2 TO ·1 ·1 TO 5·3 | ·1 TO 5·4 | ·1 TO 5·4 | ·2 TO 5·4 | ·2 TO 5·4 | ·2 TO 5·4 | ·2 TO 5·6 | ·2 TO 5·6 | ·2 TO 5·6 | ·2 TO 5·6 | ·2 TO 5·6 |
| 'L' MAX. A.25 ONLY | | | | 6·0 | 7·0 | 7·0 | 7·0 | 7·0 | | | | | |

| PART Nº PREFIX | MATERIAL | SPEC. | FINISH |
|---|---|---|---|
| A.30 | H.T.S. | S.96 | HEAD & THR'D CADMIUM |
| A.59 | H.T.S. | S.96 | CADMIUM |

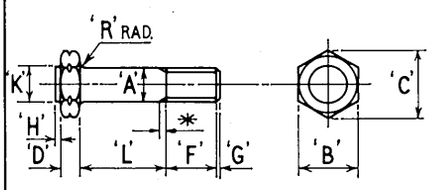


CLOSE TOLERANCE. HEXAGON

| BOLT SIZE. | 3/16" NOMINAL | 1/4" B.S.F. | 5/16" B.S.F. | 3/8" B.S.F. | 7/16" B.S.F. | 1/2" B.S.F. | 9/16" B.S.F. | 5/8" B.S.F. | 3/4" B.S.F. | 7/8" B.S.F. | 1" B.S.F. |
|---|---|---|---|---|---|---|---|---|---|---|---|
| 'A' DIA. | ·18675 ·18725 | ·24925 ·24975 | ·31175 ·31225 | ·37425 ·37475 | ·43675 ·43725 | ·49925 ·49975 | ·1898 −·00025 −·00075 | | | | |
| 'F' | ·37 | ·42 | ·47 | ·57 | ·61 | ·71 | ·40 | | | | |
| 'B' | ·319 ·324 | ·438 ·445 | ·518 ·525 | ·592 ·600 | ·702 ·710 | ·812 ·820 | ·245 ·248 | | | | |
| 'C' | ·37 | ·51 | ·61 | ·69 | ·82 | ·95 | ·29 | | | | |
| 'D' | ·076 ·083 | ·110 ·120 | ·140 ·150 | ·180 ·190 | ·230 ·240 | ·260 ·270 | ·084 ·092 | | | | |
| 'R' | ·010 ·015 | ·010 ·030 | ·010 ·030 | ·010 ·030 | ·010 ·030 | ·010 ·030 | ·010 ·030 | | | | |
| 'G' | ·030 ·040 | ·030 ·040 | ·030 ·040 | ·030 ·040 | ·040 ·050 | ·040 ·050 | ·030 ·040 | | | | |
| 'K' | ·32 | ·44 | ·52 | ·59 | ·70 | ·81 | ·195 | | | | |
| 'H' | ·03 | ·03 | ·03 | ·03 | ·03 | ·03 | ·03 | | | | |
| 'L' +·04 −·0 | ·2 TO 2·5 | ·2 TO 3·0 | ·2 TO 3·7 | ·2 TO 3·5 | ·2 TO 4·0 | ·2 TO 4·5 | ·1 TO | | | | |

| PART | MAT'L | SPEC. |
|---|---|---|
| A.S.2504/C | H.T.S. | S.96 |

FINISH:- HEAD & THREAD: CADMIUM

CLOSE TOLERANCE HEXAGON - SPECIAL FOR ROD END AND SMALL BALL BEARINGS (C.B.A.0 AND SIMILAR.)

FINISH:— CADMIUM PLATED ALL OVER A.S. 4569.

| PART Nº PREFIX | MATERIAL | SPEC: | FINISH |
|---|---|---|---|
| D.H.S. 382 | H.T.S. | S.96 | CADMIUM |

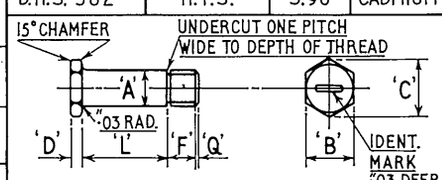


SPECIAL H.T.S. SHEAR

| BOLT SIZE. | 1/4" B.S.F. | 5/16" B.S.F. | 3/8" B.S.F. | 7/16" B.S.F. | 1/2" B.S.F. | 9/16" B.S.F. | 5/8" B.S.F. | 3/4" B.S.F. | 7/8" B.S.F. | 1" B.S.F. |
|---|---|---|---|---|---|---|---|---|---|---|
| 'A' DIA. | ·248 ·250 | ·3105 ·3125 | ·373 ·375 | | | | | | | |
| 'F' | ·25 | ·26 | ·30 | | | | | | | |
| 'B' | ·321 ·324 | ·440 ·445 | ·520 ·525 | | | | | | | |
| 'C' | ·37 | ·51 | ·61 | | | | | | | |
| 'D' | ·12 ·13 | ·12 ·13 | ·12 ·13 | | | | | | | |
| 'Q' | ·019 | ·023 | ·025 | | | | | | | |
| 'L' +·02 −·0 | ·05 TO | ·05 TO | ·05 TO | | | | | | | |

NOTE
1. TO BE USED IN CONJUNCTION WITH D.H.S. 383 OR 983 C/BORED NUT OR WASHER & NUT ONLY.
2. THE PLAIN LENGTH 'L' SHOULD BE SELECTED TO CONTAIN THE FULL THICKNESS OF THE MATERIAL TO BE HELD. THE CLAMPING EFFECT BEING OBTAINED BY THE FACE OF THE NUT (D.H.S. 383 OR D.H.S. 983) OVER-RIDING THE PLAIN SHANK
3. PLAIN LENGTHS 'L' ARE AVAILABLE IN INCREMENTS OF ·05
4. CALL UP AS D.H.S 901 BELOW. ⊙

| PART Nº PREFIX. | MATERIAL | SPEC. | FINISH |
|---|---|---|---|
| A.57 | H.T.S. | S.96 | HEAD & THR'D CADMIUM |
| A.60 | H.T.S. | S.96 | CADMIUM |

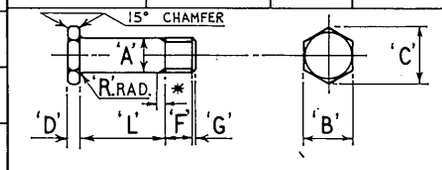


CLOSE TOLERANCE. SHEAR

| BOLT SIZE. | 1/4" B.S.F. | 5/16" B.S.F. | 3/8" B.S.F. | 7/16" B.S.F. | 1/2" B.S.F. | 9/16" B.S.F. | 5/8" B.S.F. | 3/4" B.S.F. | 7/8" B.S.F. | 1" B.S.F. |
|---|---|---|---|---|---|---|---|---|---|---|
| 'A' DIA. | ·24925 ·24975 | ·31175 ·31225 | ·37425 ·37475 | ·43675 ·43725 | ·49925 ·49975 | ·3143 ·3148 | 8 M/M 5/16 B.S.F. | THIN SLOTTED NUT A58/GS TO BE USED | | |
| 'F' | ·26 | ·26 | ·26 | ·26 | ·26 | ·26 | | | | |
| 'B' | ·319 ·324 | ·438 ·445 | ·518 ·525 | ·592 ·600 | ·702 ·710 | ·438 ·445 | | | | |
| 'C' | ·37 | ·51 | ·61 | ·69 | ·82 | ·51 | | | | |
| 'D' | ·12 ·13 | ·12 ·13 | ·12 ·13 | ·12 ·13 | ·12 ·13 | ·12 ·13 | | | | |
| 'R' | ·015 ·030 | ·015 ·030 | ·015 ·030 | ·015 ·030 | ·015 ·030 | ·03 | | | | |
| 'G' | ·03 ·04 | ·03 ·04 | ·03 ·04 | ·04 ·05 | ·04 ·05 | ·03 | | | | |
| 'L' +·04 −·0 | ·2 TO 2·5 | ·2 TO 3·0 | ·2 TO 3·5 | ·2 TO 4·0 | ·2 TO 4·5 | ·2 TO− ·05 INC. | | | | |

| PART No. | MAT'L | SPEC. |
|---|---|---|
| D.H.S. 854 | H.T.S | S.96 |

FINISH. HEAD & THREAD CADMIUM.

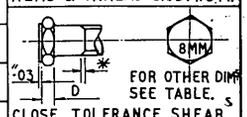


FOR OTHER DIMS SEE TABLE.

CLOSE TOLERANCE SHEAR 8M/M BOLT-5/16 B.S.F. THR'D. FOR USE IN 8M/M BALL RACES WHERE LOADING IS RECIPROCAL

| BOLT SIZE | 2 X PITCH |
|---|---|
| 1" B.S.F. | ·20 |
| 7/8" B.S.F. | ·181 |
| 3/4" B.S.F. | ·167 |
| 5/8" B.S.F. | ·143 |
| 9/16" B.S.F. | ·125 |
| 1/2" B.S.F. | ·125 |
| 7/16" B.S.F. | ·111 |
| 3/8" B.S.F. | ·100 |
| 5/16" B.S.F. | ·091 |
| 1/4" B.S.F. | ·077 |
| 2 BA | ·064 |
| 4 BA | ·052 |
| 6 BA | ·042 |

ALLOWANCE MUST BE MADE FOR MAX: THREAD RUN-OUT (2 X P) WHEN CALCULATING PLAIN LENGTH 'L'

| PART Nº PREFIX. | MATERIAL | SPEC. | FINISH |
|---|---|---|---|
| D.H.S. 901 | LIGHT ALLOY | D.T.D. 363 | ANODIC |

CHAMFERED ON UNDERSIDE ONLY

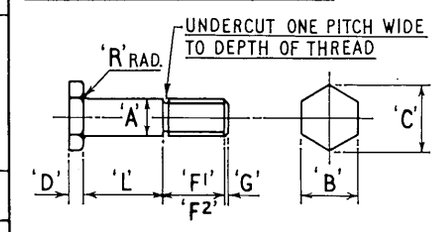


SPECIAL L.A. SHEAR

| IDENT. LETTER | FOR THIN NUT | | C | E | G | J | | |
|---|---|---|---|---|---|---|---|---|
| 'F1' | | | ·20 | ·25 | ·26 | ·30 | | |
| IDENT. LETTER | FOR FULL NUT | | CC | EE | GG | JJ | | |
| 'F2' | | | ·32 | ·38 | ·45 | ·54 | | |
| 'A' DIA. | | | ·183 ·185 | ·248 ·250 | ·3105 ·3125 | ·373 ·375 | | |
| 'B' | | | ·319 ·324 | ·438 ·445 | ·518 ·525 | ·592 ·600 | | |
| 'C' | | | ·37 | ·51 | ·61 | ·69 | | |
| 'D' | | | ·100 ·106 | ·100 ·110 | ·125 ·135 | ·150 ·160 | | |
| 'R' | | | ·02 | ·03 | ·03 | ·03 | | |
| 'G' | | | ·02 | ·03 | ·03 | ·03 | | |
| 'L' +·02 −·0 | | | ·05 TO | ·05 TO | ·10 TO | ·10 TO | | |

NOTE
1. TWO LENGTHS OF THREAD ARE AVAILABLE FOR D.H.S. 901 SHEAR BOLTS. THE SHORT THREAD BOLTS ARE TO BE USED IN CONJUNCTION WITH D.H.S. 383 OR 983 C/BORED NUTS.
2. PLAIN LENGTHS 'L' ARE AVAILABLE IN ·05 INCREMENTS FOR BOTH TYPES OF BOLT.
3. SEE DATA SHEET III/43A — 'USE OF NUTS.'

METHOD OF CALLING UP
A SHEAR BOLT (SHORT THREAD) ⊙ PLAIN LENGTH 'L' ·55 x 1/4" B.S.F. IS D.H.S. 901/5 1/2/E
SIMILARLY A SHEAR BOLT (LONG THREAD) WITH PLAIN LENGTH 'L' ·5 x 1/4" B.S.F. IS D.H.S/901/5 EE

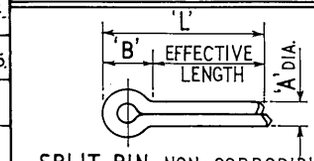


SPLIT PIN - NON-CORRODIBLE

S.P. 9
SEE B.S. SPEC. FOR 1/32", 3/64" & 1/4" DIA'S.

| IDENT. CODE | | | C8 | C8 | C8 | C8 | E10 | E10 | G12 | G12 | H14 | H14 | K18 |
|---|---|---|---|---|---|---|---|---|---|---|---|---|---|
| 'A' DIA. | | | 1/16" | 1/16" | 1/16" | 1/16" | 3/32" | 3/32" | 1/8" | 1/8" | 5/32" | 5/32" | 3/16" |
| 'B' DIA. | | | ·16 | ·16 | ·16 | ·16 | ·23 | ·23 | ·30 | ·30 | ·36 | ·36 | ·44 |
| 'L' NOM. LENGTH | | | 1" | 1" | 1" | 1" | 1 1/4" | 1 1/4" | 1 1/2" | 1 1/2" | 1 3/4" | 1 3/4" | 2 1/4" |
| DRILL SIZE | | | Nº 51 | Nº 51 | Nº 51 | Nº 51 | Nº 41 | Nº 41 | Nº 30 | Nº 30 | Nº 20 | Nº 20 | Nº 11 |
| BOLT SIZE | 6 B.A. | 4 B.A. | 2 B.A. | 1/4" B.S.F. | 5/16" B.S.F. | 3/8" B.S.F. | 7/16" B.S.F. | 1/2" B.S.F. | 9/16" B.S.F. | 5/8" B.S.F. | 3/4" B.S.F. | 7/8" B.S.F. | 1" B.S.F. |

| ISSUE Nº | DATE |
|---|---|
| 1 | MAY '51 |
| 2 | JUNE '54 |
| 3 | MARCH '55 |
| 4 | AUG. '55 |
| 5 | JULY '56 |

DRAWN: L. SPENCER
TRACED: DOLTON DRWG Co 1 - 12 - 1950
APPROVED: [signature]

FOR SPECIAL CLOSE TOLERANCE SHEAR BOLTS (U.T.S. 75 TONS) SEE D.H.S. 459 & D.H.S. 829
FOR SPECIAL VERY CLOSE TOLERANCE SHEAR BOLTS (U.T.S. 75 TONS) SEE D.H.S. 959 & DHS 860
FOR STRENGTH FIGURES SEE DATA SHEETS III/43

# HEXAGON HEAD BOLTS - SPLIT PINS

DRAWING OFFICE DATA SHEET Nº 1/4 B

# BOLT WEIGHT DATA

## STEEL

HEX. HD. BOLTS

| Plain Length | C 2 B.A. | E 1/4" B.S.F. | G 5/16" B.S.F. | J 3/8" B.S.F. |
|---|---|---|---|---|
| .1" | .0062 | .0125 | | |
| .2" | .0069 | .0139 | .0257 | |
| .3" | .0076 | .0153 | .0277 | .0421 |
| .4" | .0083 | .0167 | .0297 | .0451 |
| .5" | .0090 | .0181 | .0318 | .0481 |
| .6" | .0097 | .0194 | .0338 | .0511 |
| .7" | .0104 | .0208 | .0358 | .0542 |
| .8" | .0111 | .0222 | .0378 | .0572 |
| .9" | .0118 | .0236 | .0399 | .0602 |
| 1.0" | .0125 | .0250 | .0419 | .0632 |

PLAIN WASHERS

| | | | | |
|---|---|---|---|---|
| SP 13 | .0012 | .00212 | .0028 | .00356 |

PLAIN NUTS

| | | | |
|---|---|---|---|
| .00347 | .00713 | .012 | .0189 |

THIN NUTS

| | | | |
|---|---|---|---|
| .00228 | .00471 | .00788 | .0112 |

DIFFERENCES FOR COUNTERSUNK BOLTS

| | | | |
|---|---|---|---|
| -.0023 | -.006 | -.0095 | -.0151 |

DIFFERENCES FOR SHEAR BOLTS (THIN HEX HD)

| | | | |
|---|---|---|---|
| - | -.00378 | -.00598 | -.01024 |

FACING WASHERS

| | | | |
|---|---|---|---|
| .000408 | .000792 | .001048 | .00134 |

## LIGHT ALLOY

HEX. HD. BOLTS

| Plain Length | C 2 B.A. | E 1/4" B.S.F. | G 5/16" B.S.F. | J 3/8" B.S.F. |
|---|---|---|---|---|
| .1" | .00223 | .0045 | | |
| .2" | .00248 | .0050 | .00925 | .01504 |
| .3" | .00274 | .0055 | .00997 | .01515 |
| .4" | .00299 | .0060 | .01070 | .01624 |
| .5" | .00324 | .0065 | .01145 | .01730 |
| .6" | .00349 | .0070 | .01217 | .01840 |
| .7" | .00374 | .0075 | .01290 | .01950 |
| .8" | .00399 | .0080 | .01360 | .02060 |
| .9" | .00425 | .0085 | .01440 | .02165 |
| 1.0" | .00450 | .0090 | .01510 | .02270 |

PLAIN WASHERS

| | | | | |
|---|---|---|---|---|
| SP 15 | .00042 | .00075 | .00099 | .00126 |

PLAIN NUTS

| | | | |
|---|---|---|---|
| .00124 | .00254 | .00427 | .00673 |

THIN NUTS

| | | | |
|---|---|---|---|
| .00081 | .00168 | .0028 | .00399 |

DIFFERENCES FOR COUNTERSUNK BOLTS

| | | | |
|---|---|---|---|
| -0.000836 | -.00215 | -.00341 | -.00543 |

DIFFERENCES FOR SHEAR BOLTS (THIN HEX HD)

| | | | |
|---|---|---|---|
| -.000058 | -.000685 | -.0009 | -.00188 |

MARCH 1955.

# THE DE HAVILLAND AIRCRAFT COMPANY LTD., HATFIELD, HERTS.

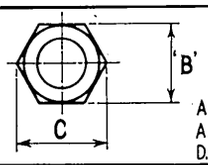


HEXAGON DIMS. FOR B.S. SPECS. A.24. A.27, A29 & A14 A.53 ALSO D.H.S. 202. & D.H.S. 983.

| NOMINAL SIZE | 6 B.A. | 4 B.A. | 2 B.A. | 1/4" BSF | 5/16" BSF | 3/8" BSF | 7/16" BSF | 1/2" BSF | 9/16" BSF | 5/8" BSF | 3/4" BSF | 7/8" BSF | 1" BSF |
|---|---|---|---|---|---|---|---|---|---|---|---|---|---|
| A/F 'B' | ·188<br>·193 | ·243<br>·248 | ·319<br>·324 | ·438<br>·445 | ·518<br>·525 | ·592<br>·600 | ·702<br>·710 | ·812<br>·820 | ·912<br>·920 | 1·000<br>1·010 | 1·190<br>1·200 | 1·288<br>1·300 | 1·468<br>1·480 |
| A/C 'C' | ·22 | ·29 | ·37 | ·51 | ·61 | ·69 | ·82 | ·95 | 1·06 | 1·17 | 1·39 | 1·50 | 1·71 |

## STEEL-ORDINARY

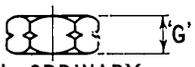


| A.24/ STAINLESS STEEL | A.27/ NON-STAINLESS | | | | | | | | | | | | |
|---|---|---|---|---|---|---|---|---|---|---|---|---|---|
| | | PART Nº R.H. | AP | BP | CP | EP | GP | JP | LP | NP | PP | QP | SP | UP | WP |
| | | PART Nº L.H. | APL | BPL | CPL | EPL | GPL | JPL | LPL | NPL | PPL | QPL | SPL | UPL | WPL |
| S.80 | * SEE CASTLE | DIM. 'G' | ·095<br>·105 | ·125<br>·135 | ·157<br>·167 | ·190<br>·200 | ·240<br>·250 | ·302<br>·312 | ·365<br>·375 | ·427<br>·437 | ·490<br>·500 | ·552<br>·562 | ·677<br>·687 | ·740<br>·750 | ·865<br>·875 |

## STEEL - THIN

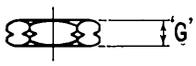


| A.24/ STAINLESS STEEL | A.27/ NON-STAINLESS | | | | | | | | | | | | |
|---|---|---|---|---|---|---|---|---|---|---|---|---|---|
| | | PART Nº R.H. | AT | BT | CT | ET | GT | JT | LT | NT | PT | QT | ST | UT | WT |
| | | PART Nº L.H. | ATL | BTL | CTL | ETL | GTL | JTL | LTL | NTL | PTL | QTL | STL | UTL | WTL |
| S.80 | * SEE CASTLE | DIM. 'G' | ·063<br>·073 | ·084<br>·094 | ·113<br>·123 | ·123<br>·133 | ·156<br>·166 | ·198<br>·208 | ·240<br>·250 | ·281<br>·291 | ·323<br>·333 | ·365<br>·375 | ·448<br>·458 | ·490<br>·500 | ·573<br>·583 |

## STEEL - SLOTTED

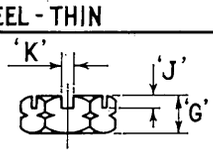


| A.24/ STAINLESS STEEL | A.27/ NON-STAINLESS | | | | | | | | | | | | |
|---|---|---|---|---|---|---|---|---|---|---|---|---|---|
| | | PART Nº R.H. | | | CS | ES | GS | JS | LS | NS | PS | QS | SS | US | WS |
| | | DIM. 'G' | | | ·240<br>·250 | ·250<br>·260 | ·270<br>·280 | ·302<br>·312 | ·365<br>·375 | ·427<br>·437 | ·490<br>·500 | ·552<br>·562 | ·677<br>·687 | ·740<br>·750 | ·865<br>·875 |
| S.80 | * SEE CASTLE | 'J' | | | ·090 | ·090 | ·090 | ·090 | ·140 | ·140 | ·187 | ·187 | ·234 | ·234 | ·280 |
| | | 'K' | | | ·080<br>·090 | ·090<br>·100 | ·090<br>·100 | ·090<br>·100 | ·125<br>·135 | ·125<br>·135 | ·165<br>·175 | ·165<br>·175 | ·208<br>·218 | ·208<br>·218 | ·250<br>·260 |

## STEEL - CASTLE

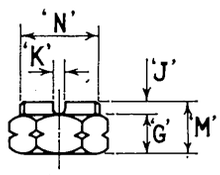


| A.24/ STAINLESS STEEL | A.27/ NON-STAINLESS | | | | | | | | | | | | |
|---|---|---|---|---|---|---|---|---|---|---|---|---|---|
| | | PART Nº R.H. | | | | EC | GC | JC | LC | NC | PC | QC | SC | UC | WC |
| | | DIM. 'M' | | | | ·280<br>·290 | ·330<br>·340 | ·392<br>·402 | ·505<br>·515 | ·567<br>·577 | ·677<br>·687 | ·739<br>·749 | ·911<br>·921 | ·974<br>·984 | 1·145<br>1·155 |
| S.80 | * 6.4 & 2BA S.112 1/4"-1/2" BSF S.113 OVER 1/2" BSF S.114 | 'G' | | | | ·190<br>·200 | ·240<br>·250 | ·302<br>·312 | ·365<br>·375 | ·427<br>·437 | ·490<br>·500 | ·552<br>·562 | ·677<br>·687 | ·740<br>·750 | ·865<br>·875 |
| | | 'N' | | | | ·425<br>·430 | ·500<br>·510 | ·575<br>·585 | ·685<br>·695 | ·795<br>·805 | ·895<br>·905 | ·985<br>·995 | 1·165<br>1·185 | 1·265<br>1·285 | 1·445<br>1·465 |
| | | 'J' | | | | ·090 | ·090 | ·090 | ·140 | ·140 | ·187 | ·187 | ·234 | ·234 | ·280 |
| | | 'K' | | | | ·090<br>·100 | ·090<br>·100 | ·090<br>·110 | ·125<br>·135 | ·125<br>·135 | ·165<br>·175 | ·165<br>·175 | ·208<br>·218 | ·208<br>·218 | ·250<br>·260 |

## L.A. ORDINARY

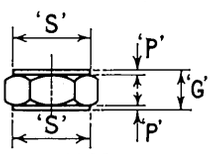


| A.29/ LIGHT ALLOY L.65 | | | | | | | | | | | | | |
|---|---|---|---|---|---|---|---|---|---|---|---|---|---|
| | PART Nº R.H. | | BP | CP | EP | GP | JP | LP | NP | PP | QP | | | |
| | PART Nº L.H. | | BPL | CPL | EPL | GPL | JPL | LPL | NPL | PPL | QPL | | | |
| | DIM. 'G' | | ·125<br>·135 | ·157<br>·167 | ·190<br>·200 | ·240<br>·250 | ·302<br>·312 | ·365<br>·375 | ·427<br>·437 | ·490<br>·500 | ·552<br>·562 | | | |
| | 'P' | | ·015 | ·015 | ·020 | ·020 | ·025 | ·025 | ·030 | ·030 | ·035 | | | |
| FINISH - ANODIC | 'S' | | ·233<br>·243 | ·309<br>·319 | ·428<br>·438 | ·508<br>·518 | ·582<br>·592 | ·692<br>·702 | ·802<br>·812 | ·902<br>·912 | ·990<br>1·000 | | | |

## L.A. SLOTTED

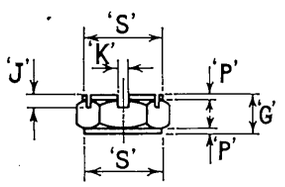


| A.29/ LIGHT ALLOY L.65 | | | | | | | | | | | | | |
|---|---|---|---|---|---|---|---|---|---|---|---|---|---|
| | PART Nº R.H. | | | | ES | GS | JS | LS | NS | PS | QS | | | |
| | DIM. 'G' | | | | ·250<br>·260 | ·270<br>·280 | ·302<br>·312 | ·365<br>·375 | ·427<br>·437 | ·490<br>·500 | ·552<br>·562 | | | |
| | 'P' | | | | ·020 | ·020 | ·025 | ·025 | ·030 | ·030 | ·035 | | | |
| FINISH - ANODIC | 'S' | | | | ·428<br>·438 | ·508<br>·518 | ·582<br>·592 | ·692<br>·702 | ·802<br>·812 | ·902<br>·912 | ·990<br>1·000 | | | |
| | 'J' | | | | ·090 | ·090 | ·090 | ·140 | ·140 | ·187 | ·187 | | | |
| | 'K' | | | | ·090<br>·100 | ·090<br>·100 | ·090<br>·100 | ·125<br>·135 | ·125<br>·135 | ·165<br>·175 | ·165<br>·175 | | | |

## L.A. THIN

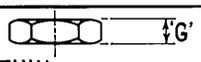


| D.H.S. 202/ LIGHT ALLOY D.T.D. 423 FINISH-BLACK ANODISE | | | | | | | | | | | |
|---|---|---|---|---|---|---|---|---|---|---|---|
| | PART Nº R.H. | | | C | E | G | J | L | N | | Q |
| | DIM. 'G' | | | ·113<br>·123 | ·123<br>·133 | ·170<br>·180 | ·198<br>·208 | ·240<br>·250 | ·281<br>·291 | | ·365<br>·375 |

'OBSOLESCENT' USE DHS 983 & 383 SEE SHEET III/43A.

## L.A. COUNTERBORED (SMALL HEXAGON)

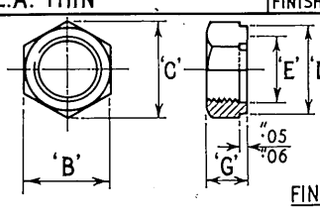


| D.H.S.383/ LIGHT ALLOY D.T.D. 423 | | | | | | | | | | |
|---|---|---|---|---|---|---|---|---|---|---|
| | PART Nº R.H. | | | C† | E† | G | J | | N | |
| | A/F 'B' | | | ·321<br>·324 | ·440<br>·445 | ·440<br>·445 | ·520<br>·525 | | ·705<br>·710 | |
| | A/C 'C' | | | ·37 | ·51 | ·51 | ·61 | | ·82 | |
| | DIM. 'G' | | | ·16<br>·17 | ·20<br>·21 | ·20<br>·21 | ·24<br>·25 | | ·33<br>·34 | |
| FINISH - ANODIC | DIA. 'D' | | | ·324 | ·445 | ·445 | ·525 | | ·710 | |
| | C/BORE 'F' | | | ·185<br>·190 | ·250<br>·255 | ·313<br>·318 | ·375<br>·380 | | ·500<br>·505 | |

† D.H.S. 383/C 'OBSOLESCENT'
† DHS 383/E 'OBSOLETE'

NOTE. D.H.S. 383/G, J & N HAVE REDUCED SIZE HEXAGON SEE DATA SHEET III/43A.

## L.A. COUNTERBORED

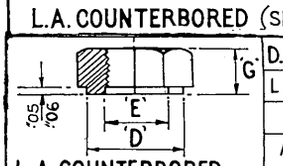


| D.H.S.983/ LIGHT ALLOY L.65 ANODIC GREEN | D.H.S.984/ STEEL S.113 CADMIUM | | | | | | | |
|---|---|---|---|---|---|---|---|---|
| | | PART NO. R.H. | | | | E | G | J |
| | | DIM. 'G' | | | | ·20<br>·21 | ·20<br>·21 | ·24<br>·25 |
| | | DIA. 'D' | | | | ·445 | ·525 | ·60 |
| | | C/BORE 'E' | | | | ·251<br>·255 | ·314<br>·318 | ·376<br>·380 |

## BRASS - ORDINARY

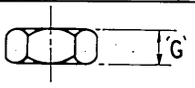


| A.53/ BRASS-COMM L | | | | | | | | | | | | |
|---|---|---|---|---|---|---|---|---|---|---|---|---|
| | PART NO. R.H. | A | B | C | | | | | | | | |
| | PART NO. L.H. | | | | | | | | | | | |
| FINISH - TINNED | DIM. 'G' | ·095<br>·105 | ·125<br>·135 | ·157<br>·167 | | | | | | | | |

NOTE: SEE SPECIFICATION FOR THE FOLLOWING SIZES - 12 B.A., 10 B.A., 8 BA.

## BRASS - THIN

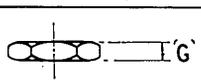


| A.14/ BRASS - B. 249 | | | | | | | | | | | | | |
|---|---|---|---|---|---|---|---|---|---|---|---|---|---|
| | PART NO. R.H. | | | | EB | GB | JB | LB | NB | PB | QB | SB | UB | WB |
| | PART NO. L.H. | | | | EBL | GBL | JBL | LBL | NBL | PBL | QBL | SBL | UBL | WBL |
| FINISH - TINNED | DIM. 'G' | | | | ·12<br>·13 | ·14<br>·15 | ·15<br>·16 | ·17<br>·18 | ·19<br>·20 | ·19<br>·20 | ·21<br>·22 | ·25<br>·26 | ·29<br>·30 | ·33<br>·34 |

## BRASS - WINGNUTS

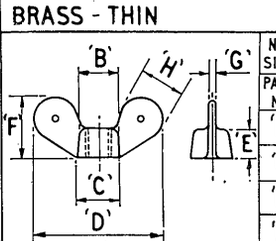


MATERIAL: S.P.EC: B.S.S.218 FINISH: CADMIUM PLATED

| NOM. SIZE | 6 B.A. | 4 B.A. | 2 B.A. | 1/4" B.S.F. | 5/16" B.S.F. | 3/8" B.S.F. | 7/16" B.S.F. | 1/2" B.S.F. |
|---|---|---|---|---|---|---|---|---|
| PART NO | A.G.S. 113.A | A.G.S. 113.B | A.G.S. 113.C | A.G.S. 120.A | A.G.S. 120.C | A.G.S. 120.E | A.G.S. 120.G | A.G.S. 120.H |
| 'B' | ·25 | ·25 | ·312 | ·375 | ·437 | ·50 | ·562 | ·625 |
| 'C' | ·28 | ·28 | ·34 | ·44 | ·52 | ·60 | ·71 | ·82 |
| 'D' | 1·0 | 1·0 | 1·25 | 1·50 | 1·62 | 1·75 | 2·0 | 2·25 |
| 'E' | ·187 | ·187 | ·25 | ·31 | ·39 | ·47 | ·55 | ·63 |
| 'F' | ·50 | ·50 | ·625 | ·75 | ·812 | ·875 | 1·00 | 1·125 |
| 'G' | ·062 | ·062 | ·080 | 3/32" | 3/32" | 3/32" | 1/8" | 1/8" |
| 'H' | ·344 | ·344 | ·406 | ·50 | ·562 | ·594 | ·687 | ·75 |

## H.T.S. THIN SLOTTED

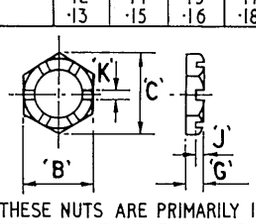


THESE NUTS ARE PRIMARILY INTENDED FOR USE WITH SHEAR BOLT A.57

A.58/ H.T.S. S.96

FINISH CADMIUM

| NOM. SIZE | 1/4" B.S.F. | 5/16" B.S.F. | 3/8" B.S.F. | 7/16" B.S.F. | 1/2" B.S.F. |
|---|---|---|---|---|---|
| PART NO. | ES | GS | JS | LS | NS |
| B | ·438<br>·445 | ·438<br>·445 | ·518<br>·525 | ·592<br>·600 | ·702<br>·710 |
| C | ·51 | ·51 | ·61 | ·69 | ·82 |
| G | ·19<br>·20 | ·19<br>·20 | ·19<br>·20 | ·19<br>·20 | ·19<br>·20 |
| J | ·09 | ·09 | ·09 | ·09 | ·09 |
| K | ·08<br>·09 | ·08<br>·09 | ·08<br>·09 | ·08<br>·09 | ·08<br>·09 |
| PART NO. | USE A27/ET | GT | JT | LT | NT |
| DIM. 'G' | | ·19<br>·20 | ·19<br>·20 | ·19<br>·20 | ·19<br>·20 |

## H.T.S. THIN (HEX. DIMS. AS FOR SLOTTED)

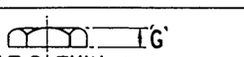


A.58/

| ISSUE Nº | DATE |
|---|---|
| 1 | MAY '51. |
| 2 | JUNE '54. |
| 3 | AUG. 55. |
| 4 | JULY '56 |

DRAWN L. SPENCER

TRACED DOLTON DRWG CO 8 - 1 - 1951

APPROVED

# HEXAGON NUTS

DRAWING OFFICE DATA SHEET Nº 1/4 C

# THE DE HAVILLAND AIRCRAFT COMPANY LTD., HATFIELD, HERTS.

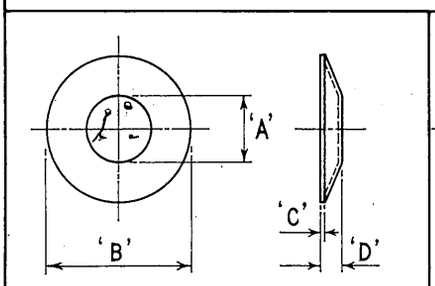


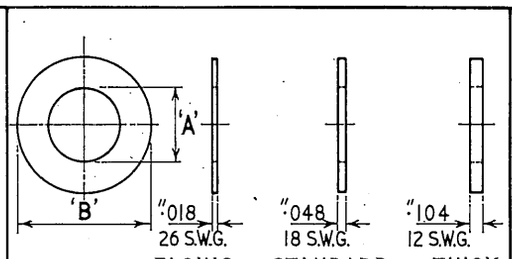


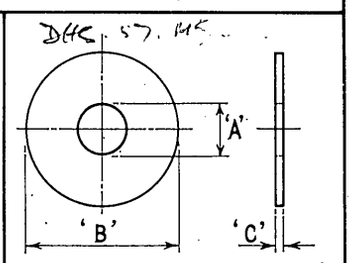


(PRIMARILY FOR USE IN TIMBER)

| BOLT SIZE | SHRINKAGE: NON-STAINLESS COMM. PART Nº | SHRINKAGE: STAINLESS D.T.D. 271 PART Nº | SHRINKAGE: DIA. 'A' +·02 −·0 | SHRINKAGE: DIA. 'B' | SHRINKAGE: S.W.G. 'C' | SHRINKAGE: 'D' | FACING: DIA. 'A' | FACING: DIA. 'B' | FACING: MILD STEEL S.3. PART Nº | FACING: STAINLESS D.T.D.171 PART Nº | STANDARD: MILD STEEL S.3. PART Nº | STANDARD: STAINLESS D.T.D.171 PART Nº | STANDARD: ALCLAD D.T.D.610 PART Nº | THICK: ALCLAD D.T.D.610 PART Nº | LARGE: MILD STEEL S.3. PART Nº | LARGE: STAINLESS D.T.D.171 PART Nº | LARGE: ALCLAD D.T.D.610 PART Nº | LARGE: DIA. 'A' | LARGE: DIA. 'B' | LARGE: S.W.G. 'C' |
|---|---|---|---|---|---|---|---|---|---|---|---|---|---|---|---|---|---|---|---|---|
| 6 B.A. | | | | | | | ·123 ·118 | ·233 ·228 | SP10A | SP11A | SP13A | SP14A | SP15A | SP16A | SP18A | SP19A | D.H.S. 34A | ·123 ·118 | 1·01 ·99 | 16 |
| 4 B.A. | | | | | | | ·157 ·152 | ·301 ·296 | SP10B | SP11B | SP13B | SP14B | SP15B | SP16B | SP18B | SP19B | D.H.S. 34B | ·157 ·152 | 1·01 ·99 | 16 |
| 2 B.A. | D.H.S. 33/1 | D.H.S. 187/1 | 13/64 | ·625 | 22 | ·071 | ·202 ·197 | ·391 ·386 | SP10C | SP11C | SP13C | SP14C | SP15C | SP16C | SP18C | SP19C | D.H.S 34C | ·202 ·197 | ·26 1·24 | 16 |
| 1/4" B.S.F. | D.H.S. 33/2 | D.H.S. 187/2 | 17/64 | ·75 | 22 | ·085 | ·270 ·265 | ·520 ·510 | SP10E | SP11E | SP13E | SP14E | SP15E | SP16E | SP18E | SP19E | D.H.S. 34D | ·270 ·265 | ·26 1·24 | 16 |
| 5/16" B.S.F. | D.H.S. 33/3 | D.H.S. 187/3 | 21/64 | ·875 | 20 | ·099 | ·333 ·328 | ·610 ·60 | SP10G | SP11G | SP13G | SP14G | SP15G | SP16G | SP18G | SP19G | D.H.S. 34E | ·333 ·328 | ·26 1·24 | 16 |
| 3/8" B.S.F. | D.H.S. 33/4 | D.H.S. 187/4 | 25/64 | 1·1 | 19 | ·124 | ·395 ·390 | ·70 ·69 | SP10J | SP11J | SP13J | SP14J | SP15J | SP16J | SP18J | SP19J | D.H.S. 34F | ·395 ·390 | ·51 1·49 | 14 |
| 7/16" B.S.F. | D.H.S. 33/5 | D.H.S. 187/5 | 29/64 | 1·2 | 19 | ·136 | ·458 ·453 | ·82 ·81 | SP10L | SP11L | SP13L | SP14L | SP15L | SP16L | SP18L | SP19L | D.H.S. 34G | ·458 ·453 | ·51 1·49 | 14 |
| 1/2" B.S.F. | | | | | | | ·520 ·515 | ·95 ·94 | SP10N | SP11N | SP13N | SP14N | SP15N | SP16N | SP18N | SP19N | D.H.S. 34H | ·520 ·515 | ·51 1·49 | 14 |
| 9/16" B.S.F. | | | | | | | ·583 ·578 | 1·07 1·06 | SP10P | SP11P | SP13P | SP14P | SP15P | SP16P | | | | | | |
| 5/8" B.S.F. | | | | | | | ·645 ·640 | 1·17 1·16 | SP10Q | SP11Q | SP13Q | SP14Q | SP15Q | SP16Q | | | | | | |
| 3/4" B.S.F. | | | | | | | ·770 ·765 | 1·39 1·38 | SP10S | SP11S | SP13S | SP14S | SP15S | SP16S | | | | | | |
| 7/8" B.S.F. | | | | | | | ·895 ·890 | 1·50 1·49 | SP10U | SP11U | SP13U | SP14U | SP15U | SP16U | | | | | | |
| 1" B.S.F. | | | | | | | 1·025 1·015 | 1·71 1·70 | SP10W | SP11W | SP13W | SP14W | SP15W | SP16W | | | | | | |

**NOTE:-** TWO SHRINKAGE WASHERS ARE TO BE USED ON EACH BOLT. THESE WASHERS COMPRESS FLAT (THICKNESS OF GAUGE) WHEN BOLTED UP.

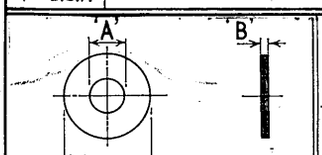


'C' D.H.S.66 LARGE
'D' D.H.S.69 SMALL
(LAMINATIONS OF ·002 OR ·003)
BRASS. SPEC: ATTEWELL LB2

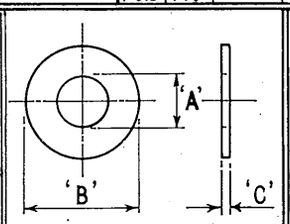


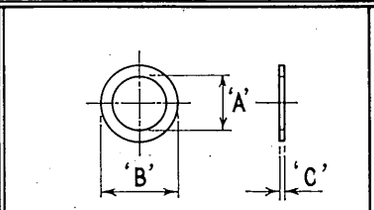


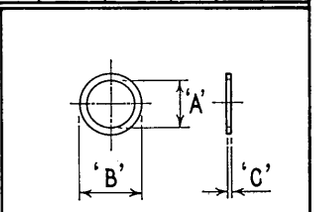


| BOLT SIZE | SHIMS: DIM. 'B' IDENT. LETTER | | SHIMS: DIA. 'A' −·0 +·02 | LARGE D.H.S. 66 DIA. 'C' | SMALL D.H.S. 69 DIA. 'D' | BURRS: COPPER B.S.899 PART Nº | BURRS: ALUM. ALLOY B.S. L.3. PART Nº | BURRS: DIA. 'A' +·015 −·0 | BURRS: DIA. 'B' | BURRS: S.W.G. 'C' |
|---|---|---|---|---|---|---|---|---|---|---|
| | 1/32" | 1/16" | | | | | | | | |
| 4 B.A. | B | BB | ·15 | 1·0 | ·4 | A.G.S. 190AA | A.G.S. 191AA | 1/16 | ·35 | 22 |
| 2 B.A. | C | CC | ·19 | 1·25 | ·5 | A.G.S. 190A | A.G.S. 191A | 3/32 | ·4 | 22 |
| 1/4" B.S.F. | D | DD | ·26 | 1·25 | ·6 | A.G.S. 190B | A.G.S. 191B | 1/8 | ·45 | 22 |
| 5/16" B.S.F. | E | EE | ·32 | 1·25 | ·75 | A.G.S. 190C | A.G.S. 191C | 5/32 | ·55 | 22 |
| 3/8" B.S.F. | F | FF | ·38 | 1·5 | ·9 | A.G.S. 190D | A.G.S. 191D | 3/16 | ·65 | 22 |
| 7/16" B.S.F. | G | GG | ·44 | 1·5 | 1·0 | A.G.S. 190F | A.G.S. 191F | 1/4 | ·8 | 20 |
| 1/2" B.S.F. | H | HH | ·51 | 1·5 | 1·15 | A.G.S. 190H | A.G.S. 191H | 5/16 | ·9 | 20 |
| | | | | | | A.G.S. 190J | A.G.S. 191J | 3/8 | 1·1 | 18 |

| BOLT SIZE | B.A. SIZES - LARGE: BRASS PART Nº | STEEL PART Nº | NON CORROD'LE PART Nº | DIA. 'A' | DIA. 'B' | S.W.G. 'C' | B.A. SIZES - SMALL: BRASS PART Nº | STEEL PART Nº | NON-CORROD'LE PART Nº | DIA. 'A' | DIA. 'B' | S.W.G. 'C' |
|---|---|---|---|---|---|---|---|---|---|---|---|---|
| 2 B.A. | SP22C | SP23C | SP24C | ·202 ·197 | ·5 ·495 | 18 | SP25C | SP26C | SP27C | ·202 ·197 | ·391 ·386 | 21 |
| 4 B.A. | SP22B | SP23B | SP24B | ·157 ·152 | ·378 ·373 | 19 | SP25B | SP26B | SP27B | ·157 ·152 | ·301 ·296 | 22 |
| 6 BA | SP22A | SP23A | SP24A | ·123 ·118 | ·288 ·283 | 20 | SP25A | SP26A | SP27A | ·123 ·118 | ·233 ·228 | 23 |
| 8 B.A. | SP22Z | SP23Z | SP24Z | ·099 ·094 | ·228 ·223 | 25 | SP25Z | SP26Z | SP27Z | ·099 ·094 | ·185 ·180 | 25 |
| 10 B.A. | SP22Y | SP23Y | SP24Y | ·078 ·073 | ·176 ·171 | 27 | | | | | | |

**NOTE:-** THESE WASHERS ARE PRIMARILY FOR ELECTRICAL AND INSTRUMENT USE. USE B.A. SIZES OF SP10 TO 19 IN PREFERENCE.

CIRCULAR TYPE A.S.1903.

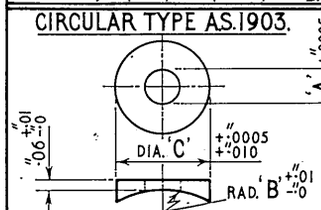


SQUARE TYPE A.S.1904.

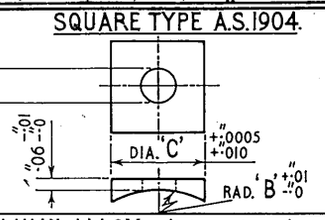


CIRCULAR TYPE A.S.1905.

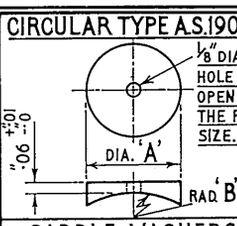


SQUARE TYPE A.S.1906.

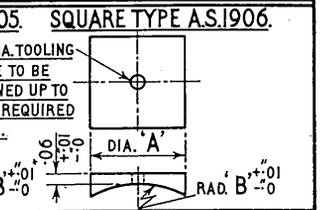


SADDLE WASHERS - ALUMN ALLOY (L.I. OR L.40.)

| MARK Nº | DIA 'A' | RAD. 'B' | DIA. 'C' | MARK Nº | DIA. 'A' | RAD. 'B' | DIA. 'C' | MARK Nº | DIA. 'A' | RAD. 'B' | DIA. 'C' | MARK Nº | DIA. 'A' | RAD. 'B' | DIA. 'C' |
|---|---|---|---|---|---|---|---|---|---|---|---|---|---|---|---|
| C6 | 3/16 | 3/8 | 1/2 | E7 | 1/4 | 7/16 | 5/8 | G8 | 5/16 | 1/2 | 3/4 | J8 | 3/8 | 1/2 | 7/8 |
| C7 | 3/16 | 7/16 | 1/2 | E8 | 1/4 | 1/2 | 5/8 | G9 | 5/16 | 9/16 | 3/4 | J9 | 3/8 | 9/16 | 7/8 |
| C8 | 3/16 | 1/2 | 1/2 | E9 | 1/4 | 9/16 | 5/8 | G10 | 5/16 | 5/8 | 3/4 | J10 | 3/8 | 5/8 | 7/8 |
| C9 | 3/16 | 9/16 | 1/2 | E10 | 1/4 | 5/8 | 5/8 | G11 | 5/16 | 11/16 | 3/4 | J11 | 3/8 | 11/16 | 7/8 |
| C10 | 3/16 | 5/8 | 1/2 | E11 | 1/4 | 11/16 | 5/8 | G12 | 5/16 | 3/4 | 3/4 | J12 | 3/8 | 3/4 | 7/8 |
| C11 | 3/16 | 11/16 | 1/2 | E12 | 1/4 | 3/4 | 5/8 | G13 | 5/16 | 13/16 | 3/4 | J13 | 3/8 | 13/16 | 7/8 |
| C12 | 3/16 | 3/4 | 1/2 | E13 | 1/4 | 13/16 | 5/8 | G14 | 5/16 | 7/8 | 3/4 | J14 | 3/8 | 7/8 | 7/8 |
| C13 | 3/16 | 13/16 | 1/2 | E14 | 1/4 | 7/8 | 5/8 | G15 | 5/16 | 15/16 | 3/4 | J15 | 3/8 | 15/16 | 7/8 |
| C14 | 3/16 | 7/8 | 1/2 | E15 | 1/4 | 15/16 | 5/8 | G16 | 5/16 | 1 | 3/4 | J16 | 3/8 | 1 | 7/8 |
| | | | | E16 | 1/4 | 1 | 5/8 | | | | | | | | |

SADDLE WASHERS - STEEL (S.I. OR S.92.)

| MARK Nº | DIA. 'A' | RAD. 'B' | MARK Nº | DIA. 'A' | RAD. 'B' | MARK Nº | DIA. 'A' | RAD. 'B' | MARK Nº | DIA. 'A' | RAD. 'B' |
|---|---|---|---|---|---|---|---|---|---|---|---|
| C6 | 1/2 | 3/8 | E7 | 5/8 | 7/16 | G8 | 3/4 | 1/2 | J8 | 7/8 | 1/2 |
| C7 | 1/2 | 7/16 | E8 | 5/8 | 1/2 | G9 | 3/4 | 9/16 | J9 | 7/8 | 9/16 |
| C8 | 1/2 | 1/2 | C9 | 5/8 | 9/16 | G10 | 3/4 | 5/8 | J10 | 7/8 | 5/8 |
| C9 | 1/2 | 9/16 | E10 | 5/8 | 5/8 | G11 | 3/4 | 11/16 | J11 | 7/8 | 11/16 |
| C10 | 1/2 | 5/8 | E11 | 5/8 | 11/16 | G12 | 3/4 | 3/4 | J12 | 7/8 | 3/4 |
| C11 | 1/2 | 11/16 | E12 | 5/8 | 3/4 | G13 | 3/4 | 13/16 | J13 | 7/8 | 13/16 |
| C12 | 1/2 | 3/4 | E13 | 5/8 | 13/16 | G14 | 3/4 | 7/8 | J14 | 7/8 | 7/8 |
| C13 | 1/2 | 13/16 | E14 | 5/8 | 7/8 | G15 | 3/4 | 15/16 | J15 | 7/8 | 15/16 |
| C14 | 1/2 | 7/8 | E15 | 5/8 | 15/16 | G16 | 3/4 | 1 | J16 | 7/8 | 1 |
| | | | E16 | 5/8 | 1 | | | | | | |

| ISSUE Nº | DATE |
|---|---|
| 1 | MAY 51 |
| 2 | AUG. 51 |

DRAWN: S. Spencer

TRACED: DOLTON DRWG CO. 11 - 1 - 1950

APPROVED: D. Clip

# WASHERS, PLAIN & SADDLE

DRAWING OFFICE DATA SHEET Nº 1/4 D

# THE DE HAVILLAND AIRCRAFT COMPANY LTD., HATFIELD, HERTS.

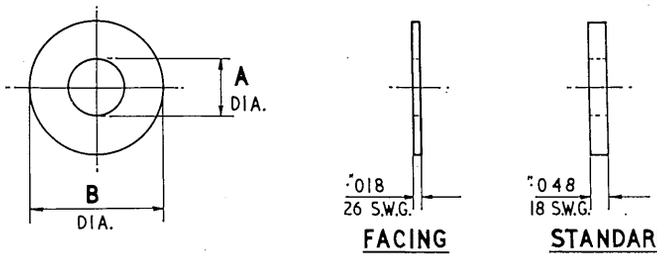


THE D.H.S.772 TO 777 SERIES OF SPECIAL WASHERS ARE SUPPLEMENTARY TO THE STANDARD B.S. S.P. 10-16 SERIES AND PROVIDE THREE ADDITIONAL OUTSIDE DIAMETERS FOR EACH HOLE SIZE. THE OUTSIDE DIAMETER. INCREASING BY 1/16" INCREMENTS IS DENOTED BY THE STROKE NUMBER.

| MATERIAL | SPECIFICATION | FINISH | FACING | STANDARD |
|---|---|---|---|---|
| MILD STEEL | S.3 | CADMIUM | D.H.S. 772 | D.H.S. 775 |
| STAINLESS | D.T.D. 171 | | D.H.S. 773 | D.H.S. 776 |
| ALCLAD | L.72 | | D.H.S. 774 | D.H.S. 777 |

| BOLT SIZE | IDENT. LETTER | I/DIA. A | O/DIA. B D.H.S. /1 | D.H.S. /2 | D.H.S. /3 |
|---|---|---|---|---|---|
| 3/16" | C | ·202<br>·197 | ·453<br>·448 | ·516<br>·511 | ·578<br>·573 |
| 1/4" | E | ·270<br>·265 | ·582<br>·572 | ·645<br>·635 | ·707<br>·697 |
| 5/16" | G | ·333<br>·328 | ·672<br>·662 | ·735<br>·725 | ·797<br>·787 |
| 3/8" | J | ·395<br>·390 | ·762<br>·752 | ·825<br>·815 | ·887<br>·877 |
| 7/16" | L | ·458<br>·453 | ·882<br>·872 | ·945<br>·935 | 1·007<br>·997 |
| 1/2" | N | ·520<br>·515 | 1·012<br>1·002 | 1·075<br>1·065 | 1·137<br>1·127 |

| BOLT SIZE | IDENT. LETTER | I/DIA. A | O/DIA. B D.H.S. /1 | D.H.S. /2 | D.H.S. /3 |
|---|---|---|---|---|---|
| 9/16" | P | ·583<br>·578 | 1·132<br>1·122 | 1·195<br>1·185 | 1·257<br>1·247 |
| 5/8" | Q | ·645<br>·640 | 1·232<br>1·222 | 1·295<br>1·285 | 1·357<br>1·347 |
| 3/4" | S | 770<br>765 | 1·452<br>1·442 | 1·515<br>1·505 | 1·577<br>1·567 |
| 7/8" | U | ·895<br>·890 | 1·562<br>1·552 | 1·625<br>1·615 | 1·687<br>1·677 |
| 1" | W | 1·025<br>1·015 | 1·772<br>1·762 | 1·835<br>1·825 | 1·897<br>1·887 |

METHOD OF CALLING UP.
A MILD STEEL FACING WASHER TO SUIT 1/4" BOLT X ·645/·635 O/DIA. WILL BE

| D.H.S. 772 | E | 2 |
|---|---|---|
| BASIC PART NUMBER FOR TYPE OF WASHER, MATERIAL & S.W.G. | IDENTIFICATION LETTER FOR SIZE | SUFFIX INDICATING O/DIA. |

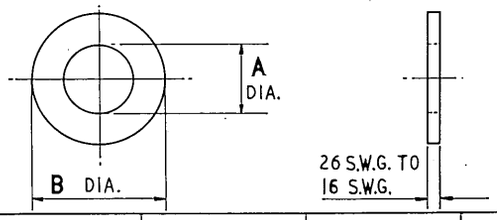


| PART NUMBER | MATERIAL | SPECIFICATION | FINISH |
|---|---|---|---|
| D.H.S. 781 | MILD STEEL | S.3 | CADMIUM |
| D.H.S. 782 | STAINLESS | D.T.D. 171 | |
| D.H.S. 783 | ALCLAD | L.72 | |

| PART Nº D.H.S. / | TO SUIT BOLT SIZE | I/DIA. A | O/DIA. B |
|---|---|---|---|
| 3 | | ·096 | ·40 |
| 10 | | ·096 | ·618 |
| 55 | | ·125 | 1·527 |
| 1 | | ·128 | ·35 |
| 65 | | ·149 | ·625 |
| 4 | | ·156 | ·5 |
| 18 | | ·156 | ·75 |
| 17 | | ·157 | ·75 |
| 8 | | ·187 | ·60 |
| 66 | | ·189 | ·75 |
| 37 | | ·189 | 1·0 |
| 2 | 3/16" | ·191 | ·39 |
| 5 | 2 B.A. | 191 | ·50 |
| 11 | | ·191 | ·625 |
| 63 | | ·191 | 875 |
| 59 | | ·22 | 2·125 |
| 14 | | ·234 | ·625 |
| 19 | | ·25 | ·75 |
| 38 | | ·25 | 1·0 |
| 47 | | ·25 | 1·125 |
| 9 | | ·253 | ·60 |
| 6 | | ·257 | ·50 |
| 24 | 1/4" | ·257 | ·75 |
| 30 | | ·257 | ·80 |
| 32 | | ·257 | ·875 |
| 20 | | ·264 | ·75 |
| 7 | | ·265 | ·50 |
| 13 | | ·265 | ·625 |
| 54 | | ·272 | 1·5 |
| 53 | | ·281 | 1·375 |
| 48 | | ·312 | 1·25 |
| 61 | | ·3125 | ·6875 |
| 23 | 5/16" | ·317 | ·75 |
| 21 | | ·32 | ·75 |
| 34 | | ·321 | ·875 |

| PART Nº D.H.S. / | TO SUIT BOLT SIZE | I/DIA. A | O/DIA. B |
|---|---|---|---|
| 16 | 5/16" | ·323 | ·625 |
| 26 | | ·3281 | ·75 |
| 62 | | ·375 | ·875 |
| 39 | | ·375 | 1·0 |
| 46 | | ·375 | 1·1 |
| 56 | | ·375 | 1·7 |
| 22 | | ·38 | ·75 |
| 35 | 3/8" | ·38 | ·945 |
| 27 | | ·385 | ·75 |
| 40 | | ·385 | 1·0 |
| 58 | | ·386 | 1·87 |
| 15 | | ·390 | ·625 |
| 68 | | ·391 | ·7 |
| 41 | 7/16" | ·437 | 1·0 |
| 31 | | ·45 | ·815 |
| 28 | | ·50 | ·80 |
| 42 | | ·512 | 1·0 |
| 57 | 1/2" | ·515 | 1·362 |
| 49 | | ·52 | 1·25 |
| 52 | | ·53 | 1·312 |
| 33 | | ·628 | ·875 |
| 50 | | ·63 | 1·25 |
| 43 | 5/8" | ·64 | 1·0 |
| 44 | | ·687 | 1·0 |
| 67 | 3/4" | ·75 | 1·25 |
| 45 | | ·937 | 1·22 |
| 60 | 1 1/4" | 1·25 | 2·25 |
| 64 | | 1·64 | 2·03 |

A RANGE OF TOOLS EXIST TO PROVIDE WASHERS TO THE DIMENSIONS QUOTED ABOVE AND SUITABLE FOR MATERIAL FROM 26 S.W.G. TO 16 S.W.G. THE PART No. INDICATES THE MATERIAL REQUIRED AND THE S.W.G. IS INDICATED BY A STROKE No.
METHOD OF CALLING UP
A SPECIAL MILD STEEL WASHER ·265 I/D. X ·625 O/D & 18 S.W.G. IS:-

| D.H.S. 781 | 13 | 18 |
|---|---|---|
| BASIC PART NUMBER FOR MATERIAL | STROKE Nº TO INDICATE SIZE THIS IS REF. Nº ON TOOL DRG. STD. 127 | S.W.G. GIVEN AS ACTUAL |

## SUPPORT WASHERS

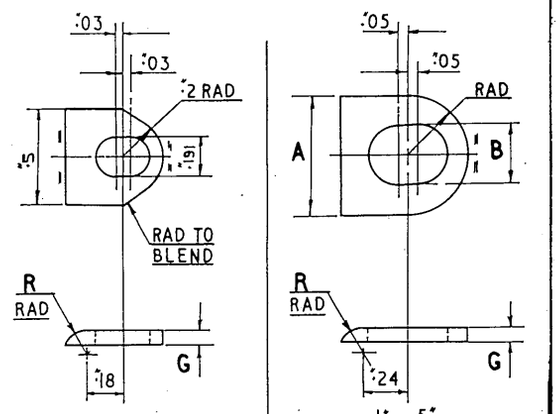


TO SUIT 2 B.A. BOLTS

TO SUIT 1/4" & 5/16" DIA. BOLTS

| TO SUIT | DIM. 'A' | DIM. 'B' |
|---|---|---|
| 1/4" DIA | ·6 | ·257 |
| 5/16" DIA | ·7 | ·316 |

| TO SUIT 2 B.A. PART NUMBER | TO SUIT 1/4" PART NUMBER | TO SUIT 5/16" PART NUMBER | COMMON DIMENSIONS S.W.G. G | MADE FROM | RAD. R |
|---|---|---|---|---|---|
| D.H.S. 725 C 16 | D.H.S. 725 E 16 | D.H.S. 725 G 16 | 16 | J2037 | ·056 (2X |
| D.H.S. 725 C 12 | D.H.S. 725 E 12 | D.H.S. 725 G 12 | 12 | J2042 | 22G) |
| D.H.S. 726 C 16 | D.H.S. 726 E 16 | D.H.S. 726 G 16 | 16 | J2038 | ·072 (2X |
| D.H.S. 726 C 12 | D.H.S. 726 E 12 | D.H.S. 726 G 12 | 12 | J2043 | 20G) |
| D.H.S. 727 C 16 | D.H.S. 727 E 16 | D.H.S. 727 G 16 | 16 | J2039 | ·096 (2X |
| D.H.S. 727 C 12 | D.H.S. 727 E 12 | D.H.S. 727 G 12 | 12 | J2044 | 18G) |
| D.H.S. 728 C 16 | D.H.S. 728 E 16 | D.H.S. 728 G 16 | 16 | J2040 | ·128 (2X |
| D.H.S. 728 C 12 | D.H.S. 728 E 12 | D.H.S. 728 G 12 | 12 | J2045 | 16G) |
| D.H.S. 729 C 16 | D.H.S. 729 E 16 | D.H.S. 729 G 16 | 16 | J2041 | ·160 (2X |
| D.H.S. 729 C 12 | D.H.S. 729 E 12 | D.H.S. 729 G 12 | 12 | J2046 | 14G) |

SUPPORT WASHER MUST BE FITTED CLOSELY INTO THE CORNER RADIUS OF THE FLANGED COMPONENT.

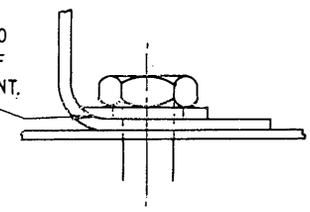

ASSEMBLY DRAWINGS MUST QUOTE THE ABOVE NOTE.

FOR THE MANUFACTURE OF SPECIAL SUPPORT WASHERS THE STANDARD RADIUSED STRIP J.2037-46 SHOULD BE USED WHERE POSSIBLE.

| ISSUE Nº | DATE |
|---|---|
| 1 | JUNE '53 |
| 2 | JULY '56 |

COMPILED
L. SPENCER
TRACED
A.E.C.
APPROVED

# WASHERS - SPECIAL PLAIN & SUPPORT

DRAWING OFFICE DATA SHEET No. 1/4 E

# THE DE HAVILLAND AIRCRAFT COMPANY LTD., HATFIELD, HERTS.

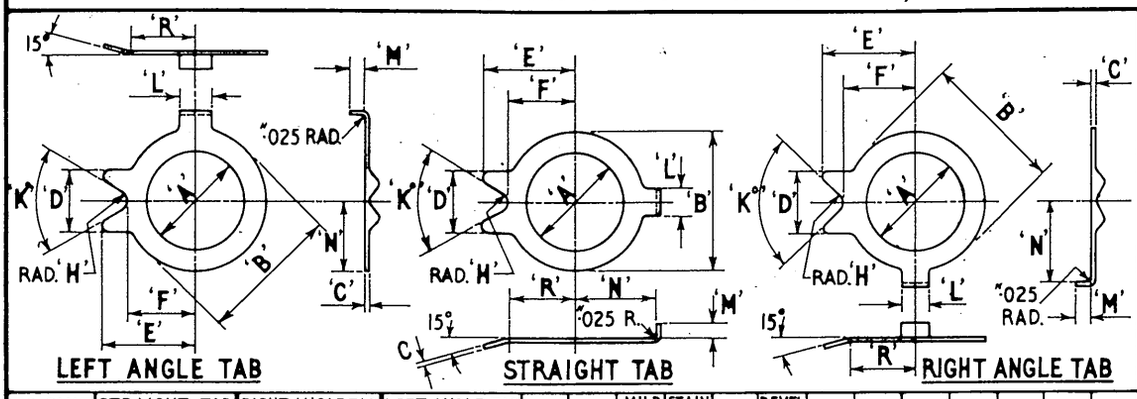


LEFT ANGLE TAB — STRAIGHT TAB — RIGHT ANGLE TAB

| TO SUIT BOLT SIZE | STRAIGHT TAB MILD STEEL PART Nº | STRAIGHT TAB STAINLESS ST. PART Nº | RIGHT ANGLE TAB MILD STEEL PART Nº | RIGHT ANGLE TAB STAINLESS ST. PART Nº | LEFT ANGLE TAB MILD STEEL PART Nº | LEFT ANGLE TAB STAINLESS ST. PART Nº | 1/DIA. 'A' | 0/DIA. 'B' | MILD STEEL S.W.G. 'C' | STAINLESS S.W.G. 'C' | 'D' | DEVELOPED LENGTH 'E' | 'F' | RAD. 'H' | 'K' | 'L' | 'M' | 'N' | 'R' | CENTRES 'X' | CENTRES 'Y' | DRILL DIA. 'Z' |
|---|---|---|---|---|---|---|---|---|---|---|---|---|---|---|---|---|---|---|---|---|---|---|
| 2 B.A. | SP41 C | SP42 C | SP43 C | SP44 C | SP45 C | SP46 C | ·195 ·190 | ·330 ·320 | 22 | 24 | ·19 | ·275 | ·16 | ·015 | 60° | ·11 | ·09 | ·225 | ·20 | ·225 | ·105 | 1/8" |
| 1/4" B.S.F. | SP41 E | SP42 E | SP43 E | SP44 E | SP45 E | SP46 E | ·260 ·255 | ·450 ·440 | 20 | 21 | ·25 | ·35 | ·22 | ·025 | 60° | ·11 | ·10 | ·27 | ·24 | ·275 | ·115 | 1/8" |
| 5/16" B.S.F. | SP41 G | SP42 G | SP43 G | SP44 G | SP45 G | SP46 G | ·325 ·320 | ·530 ·520 | 20 | 21 | ·30 | ·425 | ·26 | ·03 | 60° | ·14 | ·10 | ·33 | ·30 | ·335 | ·115 | 5/32" |
| 3/8" B.S.F. | SP41 J | SP42 J | SP43 J | SP44 J | SP45 J | SP46 J | ·395 ·390 | ·605 ·595 | 20 | 21 | ·34 | ·475 | ·295 | ·03 | 60° | ·14 | ·14 | ·37 | ·34 | ·375 | ·155 | 3/32" |
| 7/16" B.S.F. | SP41 L | SP42 L | SP43 L | SP44 L | SP45 L | SP46 L | ·455 ·450 | ·715 ·705 | 20 | 20 | ·40 | ·54 | ·35 | ·045 | 60° | ·17 | ·15 | ·42 | ·39 | ·425 | ·165 | 3/16" |
| 1/2" B.S.F. | SP41 N | SP42 N | SP43 N | SP44 N | SP45 N | SP46 N | ·520 ·515 | ·825 ·815 | 20 | 20 | ·465 | ·625 | ·405 | ·05 | 60° | ·20 | ·15 | ·47 | ·44 | ·475 | ·165 | 7/32" |
| 9/16" B.S.F. | SP41 P | SP42 P | SP43 P | SP44 P | SP45 P | SP46 P | ·580 ·575 | ·925 ·915 | 20 | 20 | ·52 | ·67 | ·455 | ·05 | 80° | ·20 | ·15 | ·545 | ·52 | ·55 | ·165 | 7/32" |
| 5/8" B.S.F. | SP41 Q | SP42 Q | SP43 Q | SP44 Q | SP45 Q | SP46 Q | ·645 ·640 | 1·010 1·000 | 20 | 20 | ·55 | ·70 | ·50 | ·05 | 80° | ·20 | ·15 | ·57 | ·54 | ·575 | ·165 | 7/32" |
| 3/4" B.S.F. | SP41 S | SP42 S | SP43 S | SP44 S | SP45 S | SP46 S | ·770 ·765 | 1·200 1·190 | 20 | 20 | ·575 | ·81 | ·595 | ·05 | 90° | ·23 | ·15 | ·67 | ·64 | ·675 | ·165 | 1/4" |
| 7/8" B.S.F. | SP41 U | SP42 U | SP43 U | SP44 U | SP45 U | SP46 U | ·895 ·890 | 1·303 1·295 | 20 | 20 | ·60 | ·875 | ·645 | ·05 | 90° | ·26 | ·15 | ·795 | ·77 | ·80 | ·165 | 9/32" |
| 1" B.S.F. | SP41 W | SP42 W | SP43 W | SP44 W | SP45 W | SP46 W | 1·020 1·015 | 1·480 1·470 | 20 | 20 | ·65 | ·97 | ·735 | ·10 | 90° | ·29 | ·15 | ·87 | ·84 | ·875 | ·165 | 5/16" |

* NOTE THESE WASHERS ARE APPROVED AS SUITABLE FOR USE WITH INSTRUMENT OR ELECTRICAL EQUIPMENT, BUT DO NOT COMPLY WITH A.P. 970 CHAP. 400 PARA. 7 STANDARD 'A' OR 'B'

THESE WASHERS DO NOT COMPLY WITH A.P. 970 CHAP. 400. PARA. 7 STANDº 'A' OR 'B'

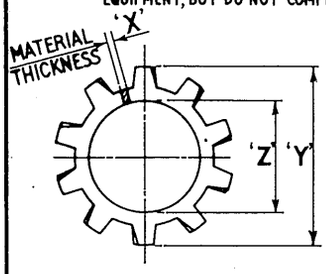


'SHAKEPROOF' FLAT EXTERNAL TEETH

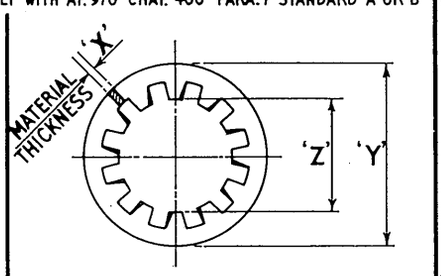


'SHAKEPROOF': INTERNAL TEETH

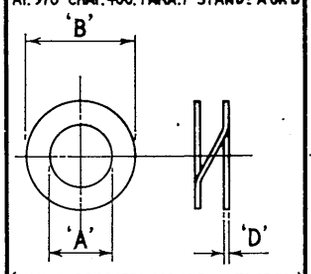


(DIMS. IN BRACKETS APPLY ONLY TO SP56E)

DOUBLE SPRING

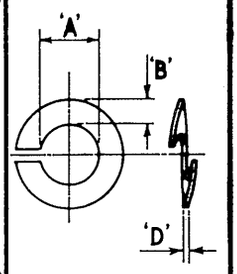


SINGLE SPRING

| TO SUIT BOLT SIZE | SPRING STEEL: PART NUMBER | DIA. 'Z' | DIA. 'Y' | DIM. 'X' | PHOSPHOR BRONZE PART NUMBER | DIA. 'Z' | DIM. 'X' | SPRING STEEL PART NUMBER | DIA. 'Z' | DIM. 'X' | COMMON DIM. 'Y' | SPRING STEEL: PART NUMBER | PHOSPHOR BRONZE: PART NUMBER | 1/DIA. 'A' | 0/DIA. 'B' | DIM. 'D' | SPRING STEEL PART NUMBER | 1/DIA. 'A' | DIM. 'B' | DIM. 'D' |
|---|---|---|---|---|---|---|---|---|---|---|---|---|---|---|---|---|---|---|---|---|
| 6 B.A. | A.G.S. 2034 A | ·123 ·117 | ·253 ·247 | ·018 | A.G.S. 2037 A | ·119 ·113 | ·014 | A.G.S. 2035 A | ·119 ·113 | ·018 | ·253 ·247 | SP 55 A | SP 56 A | ·141 ·133 | ·237 | ·032 | SP 47 A | ·116 ·113 | ·056 | ·036 |
| 4 B.A. | A.G.S. 2034 B | ·153 ·147 | ·315 ·309 | ·018 | A.G.S. 2037 B | ·153 ·147 | ·014 | A.G.S. 2035 B | ·153 ·147 | ·018 | ·303 ·297 | SP 55 B | SP 56 B | ·172 ·164 | ·300 | ·032 | SP 47 B | ·146 ·143 | ·072 | ·036 |
| 2 B.A. | A.G.S. 2034 C | ·203 ·197 | ·403 ·397 | ·024 | A.G.S. 2037 C | ·203 ·197 | ·021 | A.G.S. 2035 C | ·197 ·191 | ·021 | ·403 ·397 | SP 55 C | SP 56 C | ·203 ·196 | ·363 | ·032 | SP 47 C | ·195 ·191 | ·092 | ·048 |
| 1/4" B.S.F. | A.G.S. 2034 E | ·263 ·257 | ·505 ·495 | ·030 | A.G.S. 2037 E | ·268 ·262 | ·024 | A.G.S. 2035 E | ·268 ·262 | ·024 | ·471 ·465 | SP 55 E | SP 56 E | ·281 ·267 | ·513 (·465) | ·040 (·048) | SP 47 E | ·256 ·251 | ·128 | ·056 |
| 5/16" B.S.F. | A.G.S. 2034 G | ·335 ·325 | ·598 ·588 | ·030 | | | | A.G.S. 2035 G | ·330 ·320 | ·030 | ·605 ·595 | SP 55 G | SP 56 G | ·344 ·328 | ·576 | ·048 | SP 47 G | ·320 ·314 | ·140 | ·064 |
| 3/8" B.S.F. | A.G.S. 2034 J | ·395 ·385 | ·692 ·682 | ·035 | | | | A.G.S. 2035 J | ·395 ·385 | ·035 | ·692 ·682 | SP 55 J | SP 56 J | ·406 ·391 | ·694 | ·048 | SP 47 J | ·383 ·376 | ·160 | ·072 |
| 7/16" B.S.F. | A.G.S. 2034 L | ·458 ·448 | ·786 ·776 | ·040 | | | | A.G.S. 2035 L | ·461 ·451 | ·035 | ·786 ·776 | SP 55 L | SP 56 L | ·469 ·453 | ·757 | ·064 | SP 47 L | ·447 ·439 | ·176 | ·072 |
| 1/2" B.S.F. | A.G.S. 2034 N | ·525 ·515 | ·875 ·861 | ·040 | | | | A.G.S. 2035 N | ·525 ·515 | ·040 | ·880 ·870 | SP 55 N | SP 56 N | ·531 ·516 | ·851 | ·064 | SP 47 N | ·510 ·501 | ·210 | ·080 |
| 9/16" B.S.F. | A.G.S. 2034 P | ·590 ·580 | ·976 ·960 | ·040 | | | | A.G.S. 2035 P | ·598 ·582 | ·040 | ·976 ·960 | SP 55 P | SP 56 P | ·625 ·594 | 1·009 | ·064 | SP 47 P | ·574 ·564 | ·230 | ·092 |
| 5/8" B.S.F. | A.G.S. 2034 Q | ·649 ·639 | 1·070 1·054 | ·045 | | | | A.G.S. 2035 Q | ·663 ·647 | ·045 | 1·070 1·054 | SP 55 Q | SP 56 Q | ·688 ·656 | 1·072 | ·080 | SP 47 Q | ·636 ·626 | ·260 | ·104 |

* SEE NOTE IN TABLE ABOVE

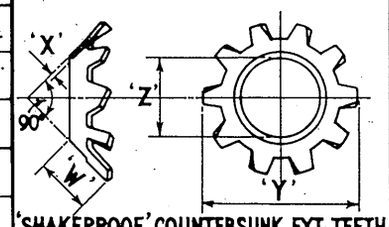


'SHAKEPROOF' COUNTERSUNK EXT: TEETH

| TO SUIT BOLT SIZE | SPRING STEEL PART NUMBER | DIA. 'Z' | DIA. 'Y' | DIM. 'X' | DIM. 'W' |
|---|---|---|---|---|---|
| 4 B.A. | A.G.S. 2036 B | ·153 ·147 | ·300 ·290 | ·018 | ·084 ·076 |
| 2 B.A. | A.G.S. 2036 C | ·198 ·192 | ·375 ·365 | ·021 | ·099 ·091 |

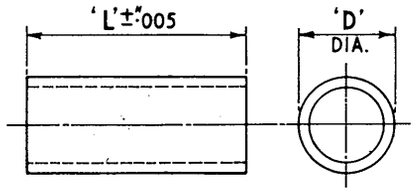


DISTANCE TUBES

| MILD STEEL SPECS: T.35 OR T.45 PART Nº | S.W.G. | LIGHT ALLOY. SPECS: T.4. D.T.D.450 OR 460 PART Nº | S.W.G. |
|---|---|---|---|
| A.S. 2806 | 22 | A.S. 2809 | 22 |
| A.S. 2807 | 20 | A.S. 2810 | 20 |
| A.S. 2808 | 17 | A.S. 2811 | 17 |

METHOD OF CALLING UP.

PART Nº INDICATING MATERIAL AND S.W.G.

DIAMETER 'D', DENOTED BY A STROKE Nº INDICATING THE DIAMETER IN 1/16"

LENGTH 'L', DENOTED BY A SECOND STROKE Nº GIVING THE LENGTH TO NEAREST ·01
USE PREFIX '0' FOR LENGTHS BELOW 1"0

EXAMPLE :- A 7/16" 0/DIA. LIGHT ALLOY DISTANCE TUBE IN 20 S.W.G. × ·75 LONG WILL BE AS. 2810/7/075

DISTANCE TUBES TO SUIT BOLT SIZES

| BOLT SIZE | TUBE S.W.G. & DIA. | NOM. CLEAR | TUBE S.W.G. & DIA. | NOM. CLEAR | TUBE S.W.G. & DIA. | NOM. CLEAR |
|---|---|---|---|---|---|---|
| 4 B.A. | 1/4" × 22 G. | ·052 | 1/4" × 20 G. | ·037 | NOTE:- NOMINAL CLEARANCE IS ON DIA. | |
| 2 B.A. | 1/4" × 22 G. | ·009 | 5/16" × 17 G. | ·015 | 5/16" × 20 G. | ·055 |
| 1/4" B.S.F. | 5/16" × 22 G. | ·006 | 3/8" × 17 G. | ·013 | 3/8" × 20 G. | ·053 |
| 5/16" B.S.F. | 3/8" × 22 G. | ·007 | 7/16" × 17 G. | ·013 | 7/16" × 20 G. | ·053 |
| 3/8" B.S.F. | 7/16" × 22 G. | ·006 | 1/2" × 17 G. | ·013 | 1/2" × 20 G. | ·053 |

| ISSUE Nº | DATE |
|---|---|
| 6 | JUNE '54. |

DRAWN: L. SPENCER

TRACED: DOLTON DRAWING Cº 2 - 4 - 1953

APPROVED

# LOCKING WASHERS & DISTANCE TUBES

DRAWING OFFICE DATA SHEET Nº 1/4F

# THE DE HAVILLAND AIRCRAFT COMPANY LTD., HATFIELD, HERTS.

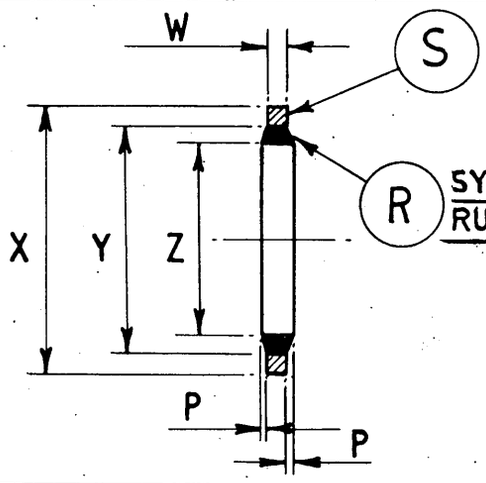


STEEL. SPEC S.1 CADMIUM PLATED
LIGHT ALLOY. SPEC. L.65 ANODISED BLUE

SYNTHETIC RUBBER.

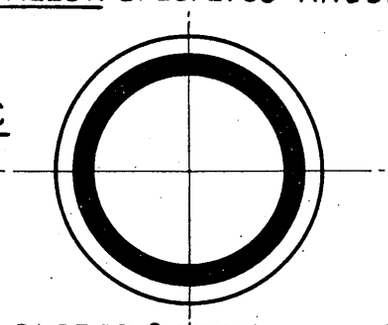

RUBBER & STEEL BONDED TOGETHER.

| SIZE B.S.P. | SIZE B.S.F. | PART No STEEL | PART No L.A. | PART 'R' 'Z' DIA | PART 'R' 'P' | PART 'S' 'Y' DIA. | PART 'S' 'X' DIA. | PART 'S' 'W' |
|---|---|---|---|---|---|---|---|---|
| | 6 B.A. | A.G.S. 1186-1 | | ·115 ·125 | ·008 / ·015 | ·161 ·164 | ·245 ·255 | ·048 / ·054 |
| | 4 B.A. | A.G.S. 1186-2 | | ·157 ·167 | | ·202 ·212 | ·281 ·291 | |
| | 2 B.A. | A.G.S. 1186-3 | D.H.S 402C | ·200 ·210 | | ·245 ·255 | ·325 ·335 | |
| | 1/4" | A.G.S. 1186-4 | | ·265 ·275 | | ·310 ·320 | ·515 ·525 | |
| | 1/4" | A.G.S. 1186-5 | | ·270 ·280 | | ·370 ·380 | ·525 ·530 | |
| | 1/4" | | D.H.S 402E | ·265 ·275 | | ·310 ·320 | ·445 ·450 | |
| | 5/16" | A.G.S. 1186-6 | D.H.S 402G | ·322 ·330 | | ·370 ·380 | ·525 ·530 | |
| | 5/16" | A.G.S. 1186-7 | | ·335 ·345 | | ·390 ·400 | ·555 ·565 | |
| 1/8" | 3/8" | A.G.S. 1186A | D.H.S 402J | ·403 ·411 | ·010 / ·020 | ·461 ·471 | ·625 ·630 | |
| | ·40" | A.G.S. 1186-8 | | ·438 ·442 | | ·485 ·495 | ·723 ·727 | |
| | 7/16" | A.G.S. 1186-9 | D.H.S. 402L | ·455 ·465 | | ·510 ·520 | ·745 ·755 | |
| 1/4" | 1/2" | A.G.S. 1186B | D.H.S. 402N | ·536 ·544 | | ·594 ·604 | ·810 ·815 | |
| | 9/16" | A.G.S. 1186-10 | | ·580 ·590 | | ·640 ·650 | ·875 ·880 | |
| 19T.P.I. ·6%D | | A.G.S. 1186BB | | ·618 ·626 | | ·676 ·686 | ·875 ·880 | |
| | 5/8" | A.G.S. 1186-11 | D.H.S. 402Q | ·645 ·655 | | ·733 ·743 | 1·000 1·005 | |
| 3/8" | | A.G.S. 1186-C | | ·675 ·683 | | ·733 ·743 | ·937 ·942 | |
| | 11/16" | A.G.S. 1186-12 | | ·710 ·720 | | ·770 ·780 | ·995 1·005 | ·092/·102 |
| 14TPI ·75%D | | A.G.S. 1186CC | | ·770 ·778 | | ·830 ·840 | 1·060 1·065 | |

| SIZE B.S.P. | SIZE B.S.F. | PART No STEEL | PART No L.A. | PART 'R' 'Z' DIA. | PART 'R' 'P' | PART 'S' 'Y' DIA. | PART 'S' 'X' DIA. | PART 'S' 'W' |
|---|---|---|---|---|---|---|---|---|
| 1/2" | | A.G.S. 1186D | | ·843 ·851 | ·010 / ·020 | ·901 ·911 | 1·125 1·130 | ·092 / ·102 |
| 5/8" | | A.G.S 1186E | | ·920 ·928 | | ·978 ·988 | 1·250 1·255 | |
| | 15/16" | A.G.S. 1186-13 | | ·950 ·960 | | 1·020 1·030 | 1·305 1·315 | |
| 3/4" | | A.G.S. 1186F | | 1·060 1·068 | | 1·118 1·128 | 1·375 1·380 | |
| | 1 1/8" | A.G.S. 1186-14 | | 1·150 1·160 | | 1·210 1·220 | 1·435 1·445 | |
| 7/8" | | A.G.S. 1186-G | | 1·208 1·216 | | 1·266 1·276 | 1·500 1·505 | |
| | 1 1/4" | A.G.S. 1186-15 | | 1·280 1·290 | | 1·400 1·410 | 1·625 1·635 | ·128 / ·138 |
| 1" | | A.G.S 1186-H | | 1·329 1·337 | | 1·447 1·457 | 1·685 1·690 | |
| | 1 3/8" | A.G.S. 1186-16 | | 1·410 1·420 | | 1·530 1·540 | 1·745 1·755 | |
| | 1 1/2" | A.G.S. 1186-17 | | 1·530 1·540 | | 1·650 1·660 | 1·875 1·885 | |
| 1 1/4" | | A.G.S. 1186J | | 1·685 1·693 | | 1·803 1·813 | 2·062 2·067 | |
| | 1 3/4" | A.G.S. 1186-18 | | 1·780 1·790 | | 1·900 1·910 | 2·245 2·255 | |
| 1 1/2" | | A.G.S. 1186K | | 1·902 1·910 | | 2·018 2·028 | 2·307 2·312 | |
| | 2" | A.G.S. 1186-19 | | 2·030 2·040 | | 2·150 2·160 | 2·495 2·505 | |
| 1 3/4" | | A.G.S. 1186L | | 2·156 2·164 | | 2·290 2·300 | 2·745 2·755 | |
| 2" | | A.G.S. 1186M | | 2·380 2·390 | | 2·500 2·510 | 2·870 2·880 | |
| | | | | | | | | |
| 2 1/2 | | A.G.S 1186P | | 2·990 3·000 | | 3·120 3·130 | 3·550 3·560 | |

FOR SATISFACTORY FUNCTIONING THE RUBBER MUST BE FULLY COVERED & THE METAL RING SHROUDED TO A WIDTH OF AT LEAST ·03

THE EXISTING RANGE OF HEXAGON A/F SIZES FOR A.G.S. ADAPTORS & BANJO BOLTS IS SATISFACTORY.

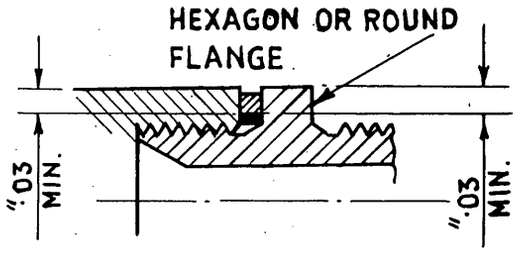


THE ABOVE RANGE OF SEALS ARE SUITABLE FOR USE WITH OIL, WATER, AIR & LOCKHEED 22 CASTOR BASE OIL. SEE A.G.S. 1186 SHT. 3 FOR SPEC. OF FLUIDS & TEMPERATURE RANGE FOR WHICH THAT TYPE OF SEAL IS SUITABLE.

WHEN BONDED SEALS ARE USED WITH JUNCTION BLOCKS & IN SIMILAR APPLICATIONS, DETAIL DRAWINGS MUST CALL UP "FINISH TO D.H.S. 544" AGAINST THE SEALING FACE ON WHICH THESE SEALS ARE USED.

| ISSUE No | DATE |
|---|---|
| 1 | JUNE '54 |
| | |
| | |
| | |

COMPILED: L. SPENCER.
TRACED:
D.P.
APPROVED:

# BONDED SEALS

DRAWING OFFICE DATA SHEET No 1/4G

# THE DE HAVILLAND AIRCRAFT COMPANY LTD., HATFIELD, HERTS.

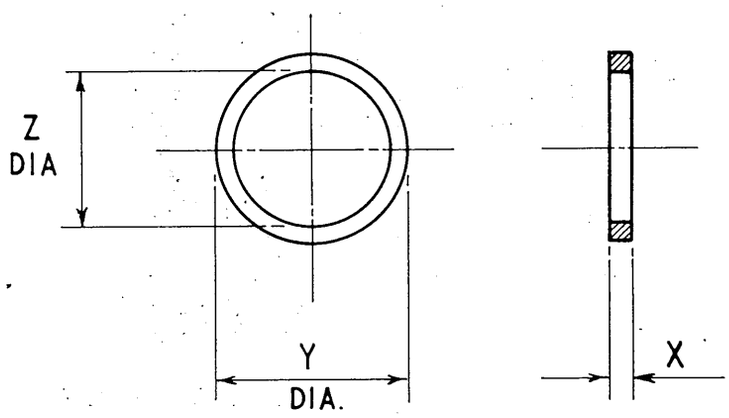


MATERIAL:
ALUMINIUM FULLY ANNEALED

SPECIFICATION:
B.S. L.4, L.16 OR L.17.

## SOFT ALUMINIUM JOINTING WASHERS

| SIZE B.S.P. | SIZE B.S.F. | PART NUMBER | DIA 'Z' +·005 −0 | DIA. 'Y' ±·005 | DIM. 'X' +·010 −0 |
|---|---|---|---|---|---|
| | 2 B.A. | D.H.S. 204 C | ·191 | ·32 | ·06 |
| | 1/4" | D.H.S. 204 E | ·26 | ·44 | ·06 |
| | 5/16" | D.H.S. 204 G | ·32 | ·48 | ·08 |
| 1/8" | 3/8" | A.G.S. 1138 A | ·39 | ·56 | ·08 |
| | 7/16" | D.H.S. 204 L | ·44 | ·60 | ·08 |
| 1/4" | 1/2" | A.G.S. 1138 B | ·52 | ·69 | ·08 |
| 19 T.P.I. WHIT. FORM ·6 O/DIA. | | A.G.S. 1138 BB | ·60 | ·77 | ·08 |
| 3/8" | | A.G.S. 1138 C | ·66 | ·83 | ·08 |

| SIZE B.S.P. | SIZE B.S.F. | PART NUMBER | DIA. 'Z' +·005 −0 | DIA. 'Y' ±·005 | DIM. 'X' +·010 −0 |
|---|---|---|---|---|---|
| 14 T.P.I. WHIT. FORM ·75 O/D. | | A.G.S. 1138 CC | ·75 | ·92 | ·09 |
| 1/2" | | A.G.S. 1138 D | ·83 | 1·00 | ·09 |
| 5/8" | | A.G.S. 1138 E | ·91 | 1·08 | ·09 |
| 3/4" | | A.G.S. 1138 F | 1·05 | 1·22 | ·09 |
| 7/8" | | A.G.S. 1138 G | 1·19 | 1·36 | ·09 |
| 1" | | A.G.S. 1138 H | 1·31 | 1·56 | ·12 |
| 1 1/4" | | A.G.S. 1138 J | 1·66 | 1·91 | ·12 |
| 1 1/2" | | A.G.S. 1138 K | 1·89 | 2·14 | ·12 |

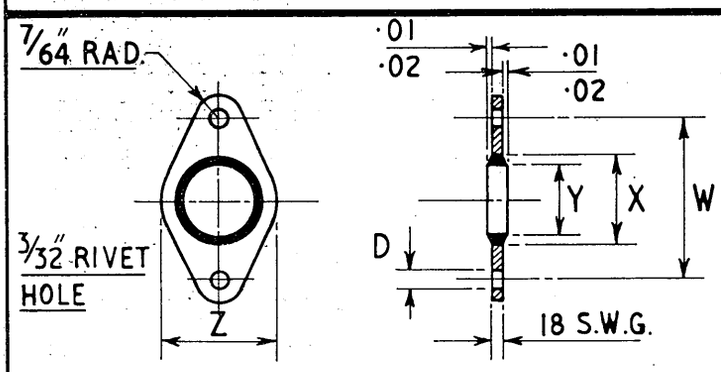


## BONDED RUBBER WASHER PLATE

SYNTHETIC RUBBER DOWTY MIX H.15. BONDED TO ALCLAD PLATE, SPEC: L.72.
THIS WASHER PLATE IS USED IN CONJUNCTION WITH SPECIAL DOUBLE ANCHOR CAP NUT D.H.S.386.

| TO SUIT BOLT SIZE | PART NUMBER | DIM. 'W' ±·001 | DIA. 'X' | DIA. 'Y' | DIM. 'Z' | DIA. 'D' |
|---|---|---|---|---|---|---|
| 1/4" B.S.F. | D.H.S. 396 E | ·75 | ·368<br>·380 | ·30<br>·31 | ·5 | ·0965<br>·0960 |
| 5/16" B.S.F. | D.H.S. 396 G | ·85 | ·433<br>·445 | ·37<br>·38 | ·6 | ·0965<br>·0960 |

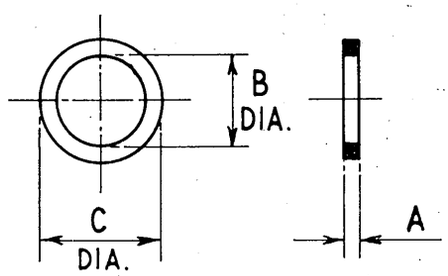


## SEALING WASHER

MATL SYNTHETIC RUBBER.
SPEC: DOWTY MIX A.190/7

SEE D.H.S.526 SHT. 3 FOR DETAILS OF SPOTFACE TO ACCOMMODATE THIS SEAL.

| TO SUIT BOLT SIZE | PART NUMBER | DIM 'A' | DIA. 'B' | DIA. 'C' |
|---|---|---|---|---|
| 1/4" B.S.F. | D.H.S. 388 E | ·078<br>·068 | ·32<br>·31 | ·44<br>·43 |
| 5/16" B.S.F. | D.H.S. 388 G | ·078<br>·068 | ·38<br>·37 | ·50<br>·49 |
| 3/8" B.S.F. | D.H.S. 388 J | ·078<br>·068 | ·43<br>·42 | ·59<br>·58 |

| ISSUE Nº | DATE |
|---|---|
| 1 | JAN. '53 |

COMPILED
L. SPENCER
TRACED
DOLTON DRAWING CO. 28. 3. 1953
APPROVED

DRAWING OFFICE DATA SHEET Nº 1/4H

# SEALING WASHERS

# THE DE HAVILLAND AIRCRAFT COMPANY LTD., HATFIELD, HERTS.

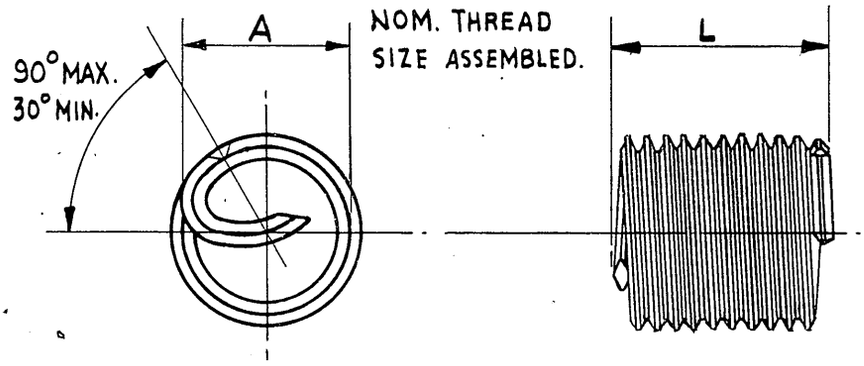


| B.A. & B.S.F. | |
|---|---|
| PART Nº | MATERIAL |
| A.S.4601 | SPRING STEEL D.T.D. 239 |
| A.S.4614 | NON-CORRODIBLE STEEL. D.T.D.326 |

INSERT PROVIDES B.A. THREAD TO B.S. 93 AND B.S.F. & B.S.P. THREADS TO B.S. 84 MEDIUM FIT WHEN ASSEMBLED IN TAPPED HOLE OF DIMENSIONS SPECIFIED IN DATA SHEET Nº 1/4L

| NOM. THREAD SIZE DIA. A. | T.P.I. | (REF.) MAJOR DIA. MIN. | NOM. LENGTHS IN TERMS OF NOM. THREAD SIZE DIA. A.- B.A.& B.S.F. | | | | | | | | | | | | | | |
|---|---|---|---|---|---|---|---|---|---|---|---|---|---|---|---|---|---|
| | | | 1 x A | | | 1·5 x A | | | 2 x A | | | 2·5 x A | | | 3 x A | | |
| | | | MK.Nº | L MAX | TOL- | MK.Nº | L MAX | TOL- | MK.Nº | L MAX | TOL- | MK.Nº | L MAX | TOL- | MK.Nº | L MAX | TOL- |
| 4 B.A. | 38·5 | ·1749 | 1 | ·130 | ·015 | 13 | ·200 | ·015 | 25 | ·270 | ·015 | 37 | ·340 | ·015 | 49 | ·420 | ·015 |
| 2 B.A. | 31·4 | ·2252 | 2 | ·180 | ·015 | 14 | ·270 | ·015 | 26 | ·360 | ·015 | 38 | ·450 | ·015 | 50 | ·540 | ·015 |
| 1/4" BSF | 26 | ·3012 | 3 | ·240 | ·020 | 15 | ·370 | ·020 | 27 | ·490 | ·020 | 39 | ·610 | ·020 | 51 | ·740 | ·020 |
| 5/16" BSF | 22 | ·3727 | 4 | ·300 | ·020 | 16 | ·460 | ·020 | 28 | ·610 | ·020 | 40 | ·770 | ·020 | 52 | ·930 | ·020 |
| 3/8" BSF | 20 | ·4410 | 5 | ·370 | ·030 | 17 | ·550 | ·030 | 29 | ·740 | ·030 | 41 | ·930 | ·030 | 53 | 1·110 | ·030 |
| 7/16" BSF | 18 | ·5107 | 6 | ·430 | ·030 | 18 | ·650 | ·030 | 30 | ·870 | ·030 | 42 | 1·080 | ·030 | 54 | 1·300 | ·030 |
| 1/2" BSF | 16 | ·5820 | 7 | ·490 | ·030 | 19 | ·740 | ·030 | 31 | ·990 | ·030 | 43 | 1·240 | ·030 | 55 | 1·490 | ·030 |
| 9/16" BSF | 16 | ·6445 | 8 | ·550 | ·030 | 20 | ·830 | ·030 | 32 | 1·110 | ·030 | 44 | 1·400 | ·030 | 56 | 1·680 | ·030 |
| 5/8" BSF | 14 | ·7184 | 9 | ·610 | ·040 | 21 | ·930 | ·040 | 33 | 1·240 | ·040 | 45 | 1·550 | ·040 | 57 | 1·860 | ·040 |
| 3/4" BSF | 12 | ·8588 | 10 | ·730 | ·040 | 22 | 1·100 | ·040 | 34 | 1·480 | ·040 | 46 | 1·860 | ·040 | 58 | 2·230 | ·040 |
| 7/8" BSF | 11 | ·9934 | 11 | ·860 | ·040 | 23 | 1·290 | ·040 | 35 | 1·730 | ·040 | 47 | 2·170 | ·040 | 59 | 2·600 | ·040 |
| 1" BSF | 10 | 1·1300 | 12 | ·980 | ·050 | 24 | 1·480 | ·050 | 36 | 1·980 | ·050 | 48 | 2·480 | ·050 | 60 | 2·980 | ·050 |

## METHOD OF CALLING UP (B.A. & B.S.F.)

A WIRE THREAD INSERT 1/4" B.S.F. NOM. THREAD SIZE x ·49" (2 x A) LONG IN SPRING STEEL WILL BE A.S. 4601 / 27.

NOTE: INSERTS WITH LENGTH & DIAMETER NOT COVERED BY S.B.A.C. STANDARDS WILL BE RECORDED ON A D.H. STANDARD.

| NOM. THREAD SIZE DIA. A. | T.P.I. | (REF.) MAJOR DIA. MIN. | RANGE OF STANDARD LENGTHS - B.S.P. | | | | |
|---|---|---|---|---|---|---|---|
| | | | PART NUMBER SPRING STEEL | PART NUMBER NON-CORRODIBLE | SHORTEST L MAX. | LONGEST L MAX. | TOL. |
| 1/8" BSP | 28 | ·4308 | A.S. 4602 | A.S. 4615 | ·20 | ·50 | -·020 |
| 1/4" BSP | 19 | ·5874 | A.S. 4603 | A.S. 4616 | ·30 | ·50 | -·030 |
| ·60 DIA | 19 | ·6694 | A.S. 4604 | A.S. 4617 | ·30 | ·60 | -·030 |
| 3/8" BSP | 14 | ·7254 | A.S. 4605 | A.S. 4618 | ·30 | ·60 | -·030 |
| ·75 DIA | 14 | ·8434 | A.S. 4606 | A.S. 4619 | ·40 | ·70 | -·040 |
| 1/2" BSP | 14 | ·9184 | A.S. 4607 | A.S. 4620 | ·40 | ·60 | -·040 |
| 5/8" BSP | 14 | ·9954 | A.S. 4608 | A.S. 4621 | ·40 | ·70 | -·040 |
| 3/4" BSP | 14 | 1·1344 | A.S. 4609 | A.S. 4622 | ·40 | ·80 | -·040 |
| 7/8" BSP | 14 | 1·2824 | A.S. 4610 | A.S. 4623 | ·40 | ·80 | -·040 |
| 1" BSP | 11 | 1·4274 | A.S. 4611 | A.S. 4624 | ·50 | ·80 | -·050 |
| 1 1/4" BSP | 11 | 1·7684 | A.S. 4612 | A.S. 4625 | ·50 | ·80 | -·050 |
| 1 1/2" BSP | 11 | 2·0004 | A.S. 4613 | A.S. 4626 | ·50 | ·90 | -·050 |

## METHOD OF CALLING UP

A WIRE THREAD INSERT 3/8" BSP. NOM. THREAD SIZE x ·5" LONG IN SPRING STEEL WILL BE:-

A.S. 4605 / 5

BASIC PART Nº / LENGTH 'L' IN TENTHS OF AN INCH

| ISSUE Nº | DATE. |
|---|---|
| 1. | AUG.'55 |
| | |
| | |
| | |
| | |

COMPILED: L. SPENCER.

TRACED: L.B.

APPROVED:

# WIRE THREAD INSERTS. 'A.S.' SERIES.

DRAWING OFFICE DATA SHEET Nº 1/4K

THE DE HAVILLAND AIRCRAFT COMPANY LTD. HATFIELD, HERTS.

# D.H.S. 554

SHEET Nº 1. | Nº OF SHTS. 1.

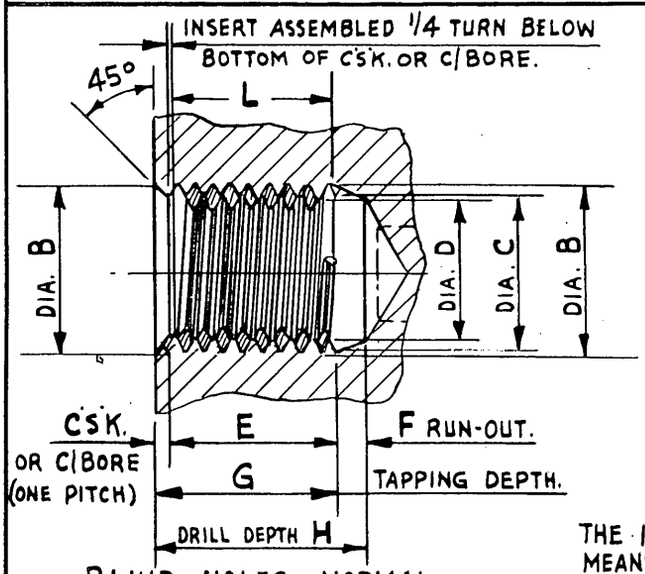


BLIND HOLES - NORMAL.

ALSO TAPPED PIPE BOSSES.

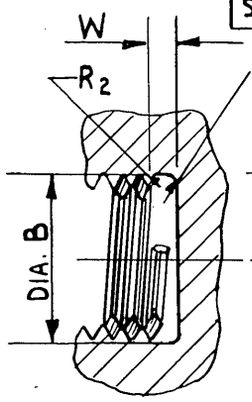


BLIND HOLES.

(RESTRICTED DEPTH)

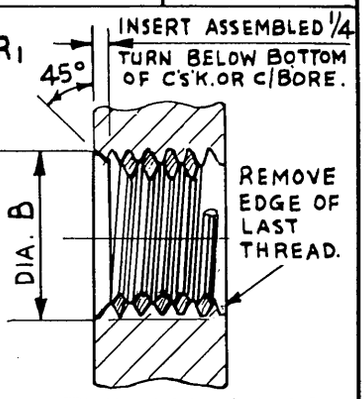


THROUGH HOLES.

THE INSERT IS ASSEMBLED IN THE TAPPED HOLE BY MEANS OF A DRIVING TOOL ENGAGING WITH THE TANG AT THE LEADING EDGE OF THE INSERT. AFTER INSERTION THE TANG IS BROKEN OFF AT THE NOTCH AND REMOVED.

| INSERT ASSEMBLED THREAD SIZE | T.P.I. | TAPPED HOLE DIMENSIONS - B.A. & B.S.F. | | | | | | RUN-OUT F | UNDERCUT | | |
|---|---|---|---|---|---|---|---|---|---|---|---|
| | | MAJOR DIA. B MIN. | EFFECTIVE DIA. C | | MINOR DIA. D | | TAPPING DRILL | | WIDTH W | RAD. R¹ | RAD. R² |
| | | | LOW LIMIT | TOL. PLUS | LOW LIMIT | TOL. PLUS | | | | | |
| 4 B.A. | 38·5 | ·1749 | ·1593 | ·0018 | ·1437 | ·0099 | 26 | ·04 | UNDERCUT IS UNSUITABLE FOR THESE SIZES. | | |
| 2 B.A. | 31·4 | ·2252 | ·2061 | ·0021 | ·1870 | ·0121 | 10 | ·05 | | | |
| 1/4" BSF | 26 | ·3012 | ·2766 | ·0020 | ·2520 | ·0117 | F | ·06 | | | |
| 5/16" BSF | 22 | ·3727 | ·3436 | ·0023 | ·3145 | ·0141 | P | ·07 | | | |
| 3/8" BSF | 20 | ·4410 | ·4090 | ·0027 | ·3770 | ·0170 | W | ·08 | ·09 | ·03 | ·01 |
| 7/16" BSF | 18 | ·5107 | ·4751 | ·0028 | ·4395 | ·0181 | 29/64 | ·08 | ·09 | ·03 | ·01 |
| 1/2" BSF | 16 | ·5820 | ·5420 | ·0030 | ·5020 | ·0195 | 33/64 | ·09 | ·09 | ·03 | ·01 |
| 9/16" BSF | 16 | ·6445 | ·6045 | ·0032 | ·5645 | ·0195 | 37/64 | ·09 | ·09 | ·05 | ·02 |
| 5/8" BSF | 14 | ·7184 | ·6727 | ·0034 | ·6270 | ·0213 | 41/64 | ·11 | ·12 | ·05 | ·02 |
| 3/4" BSF | 12 | ·8588 | ·8054 | ·0037 | ·7520 | ·0237 | 49/64 | ·12 | ·12 | ·05 | ·02 |
| 7/8" BSF | 11 | ·9934 | ·9352 | ·0039 | ·8770 | ·0252 | 57/64 | ·14 | ·16 | ·05 | ·02 |
| 1" BSF | 10 | 1·1300 | 1·0660 | ·0042 | 1·0020 | ·0270 | 1 1/64 | ·15 | ·16 | ·05 | ·02 |

CONTINUED IN TABLE BELOW

| INSERT ASSEMBLED THREAD SIZE | PT. Nº A.S. 4601/4614/ | FULL THR'D. MIN. E | PT. Nº A.S. 4601/4614/ | FULL THR'D MIN. E | PT. Nº A.S. 4601/4614/ | FULL THR'D. MIN. E | PT. Nº A.S. 4601/4614/ | FULL THR'D. MIN. E | PT. Nº A.S. 4601/4614/ | FULL THR'D MIN. E |
|---|---|---|---|---|---|---|---|---|---|---|
| 4 B.A. | 1 | ·14 | 13 | ·21 | 25 | ·28 | 37 | ·35 | 49 | ·43 |
| 2 B.A. | 2 | ·19 | 14 | ·28 | 26 | ·37 | 38 | ·46 | 50 | ·55 |
| 1/4" BSF | 3 | ·25 | 15 | ·38 | 27 | ·50 | 39 | ·62 | 51 | ·75 |
| 5/16" BSF | 4 | ·31 | 16 | ·47 | 28 | ·62 | 40 | ·78 | 52 | ·94 |
| 3/8" BSF | 5 | ·38 | 17 | ·56 | 29 | ·75 | 41 | ·94 | 53 | 1·12 |
| 7/16" BSF | 6 | ·44 | 18 | ·66 | 30 | ·88 | 42 | 1·09 | 54 | 1·31 |
| 1/2" BSF | 7 | ·50 | 19 | ·75 | 31 | 1·00 | 43 | 1·25 | 55 | 1·50 |
| 9/16" BSF | 8 | ·56 | 20 | ·84 | 32 | 1·12 | 44 | 1·41 | 56 | 1·69 |
| 5/8" BSF | 9 | ·62 | 21 | ·94 | 33 | 1·25 | 45 | 1·56 | 57 | 1·88 |
| 3/4" BSF | 10 | ·75 | 22 | 1·12 | 34 | 1·5 | 46 | 1·88 | 58 | 2·25 |
| 7/8" BSF | 11 | ·88 | 23 | 1·31 | 35 | 1·75 | 47 | 2·19 | 59 | 2·62 |
| 1" BSF | 12 | 1·00 | 24 | 1·50 | 36 | 2·0 | 48 | 2·50 | 60 | 3·00 |

## B.A. & B.S.F. INSERTS.

TAPPING DEPTH G = DIM. E. + C'S'K. OR C/BORE.

DRILL DEPTH H = DIM. G. + RUN-OUT F.

DRAWINGS WILL CALL UP "DRILL & TAP TO D.H.S. 554".

NOTE: DRAWINGS WILL ILLUSTRATE TYPE OF HOLE REQUIRED.

| INSERT ASSEMBLED THREAD SIZE | T.P.I. | TAPPED HOLE DIMENSIONS - B.S.P. | | | | | | BASIC PT. Nº OF INSERT A.S. | | ALLOWANCE X | RUN-OUT F | UNDERCUT | | |
|---|---|---|---|---|---|---|---|---|---|---|---|---|---|---|
| | | MAJOR DIA. B MIN. | EFFECTIVE DIA. C | | MINOR DIA. D | | TAPPING DRILL | | | | | WIDTH W | RAD. R¹ | RAD. R² |
| | | | LOW LIMIT | TOL. PLUS | LOW LIMIT | TOL. PLUS | | | | | | | | |
| 1/8" BSP | 28 | ·4308 | ·4079 | ·0021 | ·3850 | ·0111 | 25/64 | 4602 | 4615 | ·010 | ·05 | ·07 | ·03 | ·01 |
| 1/4" BSP | 19 | ·5874 | ·5537 | ·0025 | ·5200 | ·0175 | 17/32 | 4603 | 4616 | ·020 | ·08 | ·09 | ·03 | ·01 |
| ·60 DIA. | 19 | ·6694 | ·6357 | ·0027 | ·6020 | ·0175 | 39/64 | 4604 | 4617 | ·020 | ·08 | ·09 | ·03 | ·01 |
| 3/8" BSP | 19 | ·7254 | ·6917 | ·0027 | ·6580 | ·0175 | 43/64 | 4605 | 4618 | ·020 | ·08 | ·09 | ·03 | ·01 |
| ·75 DIA. | 14 | ·8434 | ·7977 | ·0029 | ·7520 | ·0213 | 49/64 | 4606 | 4619 | ·020 | ·11 | ·12 | ·05 | ·02 |
| 1/2" BSP | 14 | ·9184 | ·8727 | ·0029 | ·8270 | ·0213 | 27/32 | 4607 | 4620 | ·020 | ·11 | ·12 | ·05 | ·02 |
| 5/8" BSP | 14 | ·9954 | ·9497 | ·0030 | ·9040 | ·0213 | 29/32 | 4608 | 4621 | ·020 | ·11 | ·12 | ·05 | ·02 |
| 3/4" BSP | 14 | 1·1344 | 1·0887 | ·0034 | 1·0430 | ·0213 | 13/64 | 4609 | 4622 | ·020 | ·11 | ·12 | ·05 | ·02 |
| 7/8" BSP | 14 | 1·2824 | 1·2367 | ·0036 | 1·1910 | ·0213 | 1 13/64 | 4610 | 4623 | ·020 | ·11 | ·12 | ·05 | ·02 |
| 1" BSP | 11 | 1·4274 | 1·3692 | ·0038 | 1·3110 | ·0252 | 1 5/16 | 4611 | 4624 | ·020 | ·14 | ·16 | ·05 | ·02 |
| 1 1/4" BSP | 11 | 1·7684 | 1·7102 | ·0042 | 1·6520 | ·0252 | 1 21/32 | 4612 | 4625 | ·020 | ·14 | ·16 | ·05 | ·02 |
| 1 1/2" BSP | 11 | 2·0004 | 1·9422 | ·0045 | 1·8840 | ·0252 | 48 m/m | 4613 | 4626 | ·020 | ·14 | ·16 | ·05 | ·02 |

B.S.P. INSERTS: MIN. FULL THREAD E = INSERT LENGTH L (OBTAINED FROM COMPONENT DRAWING) + ALLOWANCE X. TAPPING DEPTH G = DIMENSION E + C'S'K. OR C/BORE. DRILL DEPTH H = DIM. G + RUNOUT F.

| ISSUE Nº | DATE |
|---|---|
| 1. | AUG. 55 |
| 2 | S.846 |

COMPILED. L. SPENCER.

TRACED. L.B.

APPROVED

WIRE THREAD INSERTS

DRAWING OFFICE DATA SHEET Nº 1/4L

Mr. Moller

THE DE HAVILLAND AIRCRAFT COMPANY LTD. HATFIELD, HERTS.

# D.H.S. 554

SHEET Nº 1. | Nº OF SHTS. 1.

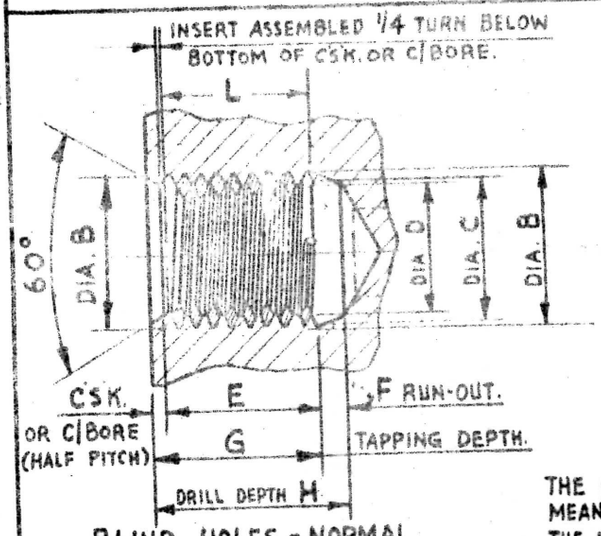


BLIND HOLES - NORMAL.

ALSO TAPPED PIPE BOSSES.

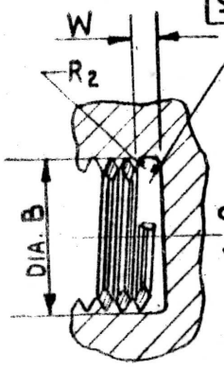


BLIND HOLES.

(RESTRICTED DEPTH)

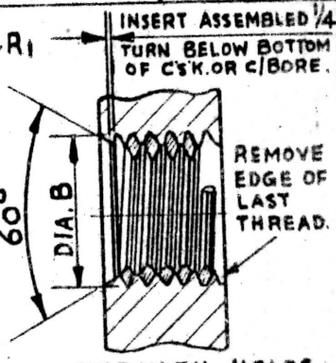


THROUGH HOLES.

THE INSERT IS ASSEMBLED IN THE TAPPED HOLE BY MEANS OF A DRIVING TOOL ENGAGING WITH THE TANG AT THE LEADING EDGE OF THE INSERT. AFTER INSERTION THE TANG IS BROKEN OFF AT THE NOTCH AND REMOVED.

| INSERT ASSEMBLED THREAD SIZE | T.P.I. | TAPPED HOLE DIMENSIONS - B.A. & B.S.F. | | | | | | RUN-OUT F | UNDERCUT | | |
|---|---|---|---|---|---|---|---|---|---|---|---|
| | | MAJOR DIA. B MIN. | EFFECTIVE DIA. C | | MINOR DIA. D | | TAPPING DRILL | | WIDTH W | RAD. R¹ | RAD. R² |
| | | | LOW LIMIT | TOL. PLUS | LOW LIMIT | TOL. PLUS | | | | | |
| 4 B.A. | 38·5 | ·1749 | ·1593 | ·0018 | ·1437 | ·0099 | 26 | ·04 | UNDERCUT IS UNSUITABLE FOR THESE SIZES. | | |
| 2 B.A. | 31·4 | ·2252 | ·2061 | ·0021 | ·1870 | ·0121 | 10 | ·05 | | | |
| 1/4" BSF | 26 | ·3012 | ·2766 | ·0020 | ·2520 | ·0117 | F | ·06 | | | |
| 5/16" BSF | 22 | ·3727 | ·3436 | ·0023 | ·3145 | ·0141 | P | ·07 | | | |
| 3/8" BSF | 20 | ·4410 | ·4090 | ·0027 | ·3770 | ·0170 | W | ·08 | ·09 | ·03 | ·01 |
| 7/16" BSF | 18 | ·5107 | ·4751 | ·0028 | ·4395 | ·0181 | 29/64 | ·08 | ·09 | ·03 | ·01 |
| 1/2" BSF | 16 | ·5820 | ·5420 | ·0030 | ·5020 | ·0195 | 33/64 | ·09 | ·09 | ·03 | ·01 |
| 9/16" BSF | 16 | ·6445 | ·6045 | ·0032 | ·5645 | ·0195 | 37/64 | ·09 | ·09 | ·05 | ·02 |
| 5/8" BSF | 14 | ·7184 | ·6727 | ·0034 | ·6270 | ·0213 | 41/64 | ·11 | ·12 | ·05 | ·02 |
| 3/4" BSF | 12 | ·8588 | ·8054 | ·0037 | ·7520 | ·0237 | 49/64 | ·12 | ·12 | ·05 | ·02 |
| 7/8" BSF | 11 | ·9934 | ·9352 | ·0039 | ·8770 | ·0252 | 57/64 | ·14 | ·16 | ·05 | ·02 |
| 1" BSF | 10 | 1·1300 | 1·0660 | ·0042 | 1·0020 | ·0270 | 1 1/64 | ·15 | ·16 | ·05 | ·02 |

CONTINUED IN TABLE BELOW

| INSERT ASSEMBLED THREAD SIZE | PT. Nº D.H.S 954/ | FULL THR'D. MIN. E | PT. Nº D.H.S 954/ | FULL THR'D MIN. E | PT. Nº D.H.S. 954/ | FULL THR'D MIN. E | PT. Nº D.H.S 954/ | FULL THR'D. MIN. E | PT. Nº D.H.S. 954/ | FULL THR'D MIN. E |
|---|---|---|---|---|---|---|---|---|---|---|
| 4 B.A. | 1 | ·14 | 13 | ·21 | 25 | ·28 | 37 | ·35 | 49 | ·43 |
| 2 B.A. | 2 | ·19 | 14 | ·28 | 26 | ·37 | 38 | ·46 | 50 | ·55 |
| 1/4" BSF | 3 | ·25 | 15 | ·38 | 27 | ·50 | 39 | ·62 | 51 | ·75 |
| 5/16" BSF | 4 | ·31 | 16 | ·47 | 28 | ·62 | 40 | ·78 | 52 | ·94 |
| 3/8" BSF | 5 | ·38 | 17 | ·56 | 29 | ·75 | 41 | ·94 | 53 | 1·12 |
| 7/16" BSF | 6 | ·44 | 18 | ·66 | 30 | ·88 | 42 | 1·09 | 54 | 1·31 |
| 1/2" BSF | 7 | ·50 | 19 | ·75 | 31 | 1·00 | 43 | 1·25 | 55 | 1·50 |
| 9/16" BSF | 8 | ·56 | 20 | ·84 | 32 | 1·12 | 44 | 1·41 | 56 | 1·69 |
| 5/8" BSF | 9 | ·62 | 21 | ·94 | 33 | 1·25 | 45 | 1·56 | 57 | 1·88 |
| 3/4" BSF | 10 | ·75 | 22 | 1·12 | 34 | 1·5 | 46 | 1·88 | 58 | 2·25 |
| 7/8" BSF | 11 | ·88 | 23 | 1·31 | 35 | 1·75 | 47 | 2·19 | 59 | 2·62 |
| 1" BSF | 12 | 1·00 | 24 | 1·50 | 36 | 2·0 | 48 | 2·50 | 60 | 3·00 |

## B.A. & B.S.F. INSERTS.

TAPPING DEPTH G = DIM. E. + C'SK OR C/BORE.

DRILL DEPTH H = DIM. G. + RUN-OUT F.

DRAWINGS WILL CALL UP "DRILL & TAP TO D.H.S. 554".

NOTE: DRAWINGS WILL ILLUSTRATE TYPE OF HOLE REQUIRED.

| INSERT ASSEMBLED THREAD SIZE | T.P.I. | TAPPED HOLE DIMENSIONS - B.S.P. | | | | | | BASIC PT. Nº OF INSERT D.H.S. | ALLOW-ANCE X | RUN-OUT F | UNDERCUT | | |
|---|---|---|---|---|---|---|---|---|---|---|---|---|---|
| | | MAJOR DIA. B MIN. | EFFECTIVE DIA. C | | MINOR DIA. D | | TAPPING DRILL | | | | WIDTH W | RAD. R¹ | RAD. R² |
| | | | LOW LIMIT | TOL. PLUS | LOW LIMIT | TOL. PLUS | | | | | | | |
| 1/8" BSP | 28 | ·4308 | ·4079 | ·0021 | ·3850 | ·0111 | 25/64 | 1077 A | ·010 | ·05 | ·07 | ·03 | ·01 |
| 1/4" BSP | 19 | ·5874 | ·5537 | ·0025 | ·5200 | ·0175 | 17/32 | 1077 B | ·020 | ·08 | ·09 | ·03 | ·01 |
| ·60 DIA | 19 | ·6694 | ·6357 | ·0027 | ·6020 | ·0175 | 39/64 | 1077 BB | ·020 | ·08 | ·09 | ·03 | ·01 |
| 3/8" BSP | 19 | ·7254 | ·6917 | ·0027 | ·6580 | ·0175 | 43/64 | 1077 C | ·020 | ·08 | ·09 | ·03 | ·01 |
| ·75 DIA | 14 | ·8434 | ·7977 | ·0029 | ·7520 | ·0213 | 49/64 | 1077 CC | ·020 | ·11 | ·12 | ·05 | ·02 |
| 1/2" BSP | 14 | ·9184 | ·8727 | ·0029 | ·8270 | ·0213 | 27/32 | 1077 D | ·020 | ·11 | ·12 | ·05 | ·02 |
| 5/8" BSP | 14 | ·9954 | ·9497 | ·0030 | ·9040 | ·0213 | 29/32 | 1077 E | ·020 | ·11 | ·12 | ·05 | ·02 |
| 3/4" BSP | 14 | 1·1344 | 1·0887 | ·0034 | 1·0430 | ·0213 | 13/64 | 1077 F | ·020 | ·11 | ·12 | ·05 | ·02 |
| 7/8" BSP | 14 | 1·2824 | 1·2367 | ·0036 | 1·1910 | ·0213 | 113/64 | 1077 G | ·020 | ·11 | ·12 | ·05 | ·02 |
| 1" BSP | 11 | 1·4274 | 1·3692 | ·0038 | 1·3110 | ·0252 | 15/16 | 1077 H | ·020 | ·14 | ·16 | ·05 | ·02 |
| 1 1/4" BSP | 11 | 1·7684 | 1·7102 | ·0042 | 1·6520 | ·0252 | 1 21/32 | 1077 J | ·020 | ·14 | ·16 | ·05 | ·02 |
| 1 1/2" BSP | 11 | 2·0004 | 1·9422 | ·0045 | 1·8840 | ·0252 | 48 m/m | 1077 K | ·020 | ·14 | ·16 | ·05 | ·02 |

B.S.P. INSERTS: MIN. FULL THREAD E = INSERT LENGTH L (OBTAINED FROM COMPONENT DRAWING) + ALLOWANCE X. TAPPING DEPTH G = DIMENSION E + C'SK. OR C/BORE. DRILL DEPTH H = DIM. G + RUNOUT F.

DATE OF ISSUE 20 MAY 1958 | DRAWING OFFICE

| ISSUE Nº | DATE |
|---|---|
| 1. | AUG. 55 |
| 2. | S.846 |
| 3. | S.949 |

COMPILED. L. SPENCER.

TRACED. L.B.

APPROVED

# WIRE THREAD INSERTS

DRAWING OFFICE DATA SHEET Nº 1/4L

# THE DE HAVILLAND AIRCRAFT COMPANY LTD., HATFIELD, HERTS.

| TYPE OF BOLT HEAD | BASIC PART Nº OF BOLT | | |
|---|---|---|---|
| | H.T. STEEL | STAINLESS STL | LIGHT ALLOY |
| SPECIFICATION. | S. 96 | S. 80 | L.65 |
| FINISH. | CADMIUM | NATURAL | ANODIC (BLUE) |
| 90° COUNTERSUNK. | AS.1242 | AS.2920 | AS.4563 |
| 90° RAISED COUNTERSUNK. | AS.1244 | AS.2921 | AS.4564 |
| ROUND. | AS.1246 | AS.2922 | AS.4565 |
| MUSHROOM. | AS.1248 | AS.2923 | AS.4566 |

ALLOWANCE MUST BE MADE FOR MAX. THREAD RUN-OUT (2 X P) WHEN CALCULATING PLAIN LENGTH 'L'.

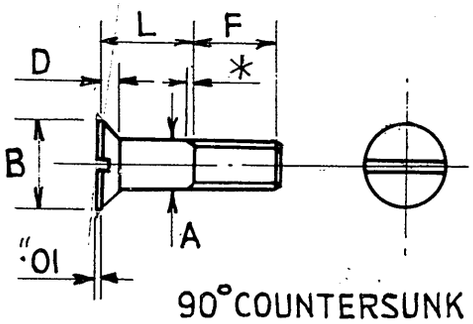


90° COUNTERSUNK

| BOLT SIZE | 4 BA | 2 BA | 1/4" BSF | 5/16" BSF | 3/8" BSF | 7/16" BSF | 1/2" BSF |
|---|---|---|---|---|---|---|---|
| IDENT: LETTER | B | C | E | G | J | L | N |
| L STEEL | ·1 TO 5·3 | ·1 TO 5·3 | ·2 TO 5·4 | ·2 TO 5·4 | ·2 TO 5·4 | ·2 TO 5·4 | ·3 TO 5·4 |
| L L.A. | ·1 TO ·3·7 | ·1 TO 3·7 | ·2 TO 3·8 | ·2 TO 3·8 | ·2 TO 3·8 | ·2 TO 3·8 | |
| A DIA | ·1387 ·1417 | ·1820 ·1850 | ·2465 ·2495 | ·3090 ·3120 | ·3715 ·3745 | ·4335 ·4370 | ·4960 ·4995 |
| B | ·25 | ·32 | ·44 | ·55 | ·66 | ·76 | ·88 |
| D | ·064 | ·078 | ·105 | ·129 | ·153 | ·171 | ·200 |
| F | ·35 | ·40 | ·45 | ·50 | ·60 | ·65 | ·70 |

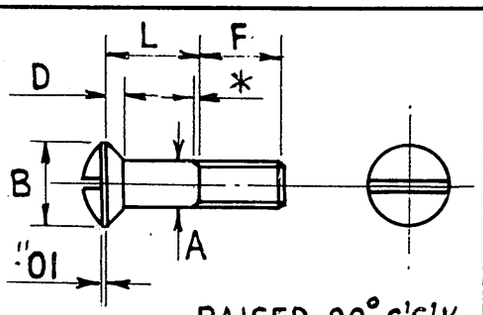


RAISED 90° C'S'K

| BOLT SIZE | 4 BA | 2 BA | 1/4" BSF | 5/16" BSF | 3/8" BSF | 7/16" BSF | 1/2" BSF |
|---|---|---|---|---|---|---|---|
| L STEEL | ·1 TO 5·3 | ·1 TO 5·3 | ·2 TO 5·4 | ·2 TO 5·4 | ·2 TO 5·4 | ·2 TO 5·4 | ·3 TO 5·4 |
| L L.A. | ·1 TO 5·3 | ·1 TO 5·3 | ·2 TO 5·4 | ·2 TO 5·4 | ·2 TO 5·4 | ·2 TO 5·4 | ·3 TO 5·4 |
| A DIA | ·1387 ·1417 | ·1820 ·1850 | ·2465 ·2495 | ·3090 ·3120 | ·3715 ·3745 | ·4335 ·4370 | ·4960 ·4995 |
| B | ·25 | ·32 | ·44 | ·55 | ·66 | ·76 | ·88 |
| D | ·064 | ·078 | ·105 | ·129 | ·153 | ·171 | ·200 |
| F | ·35 | ·40 | ·45 | ·50 | ·60 | ·65 | ·70 |

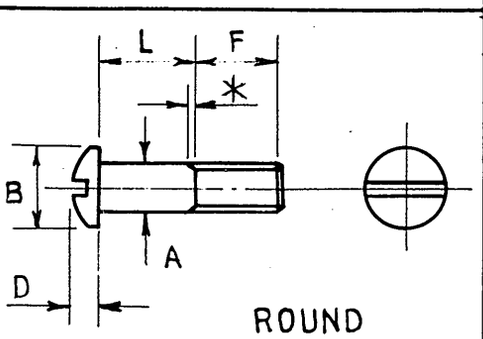


ROUND

| BOLT SIZE | 4 BA | 2 BA | 1/4" BSF | 5/16" BSF | 3/8" BSF | 7/16" BSF | 1/2" BSF |
|---|---|---|---|---|---|---|---|
| L STEEL | ½ TO ·1 ·1 TO 5·3 | ½ TO ·1 ·1 TO 5·3 | ½ TO ·1 ·1 TO 5·4 | | | | |
| L L.A | ½ TO ·1 ·1 TO 3·7 | ½ TO ·1 ·1 TO 3·7 | ½ TO ·1 ·1 TO 3·8 | | | | |
| A DIA. | ·1387 ·1417 | ·1820 ·1850 | ·2465 ·2495 | | | | |
| B | ·25 | ·32 | ·44 | | | | |
| D | ·09 | ·11 | ·15 | | | | |
| F | ·35 | ·40 | ·45 | | | | |

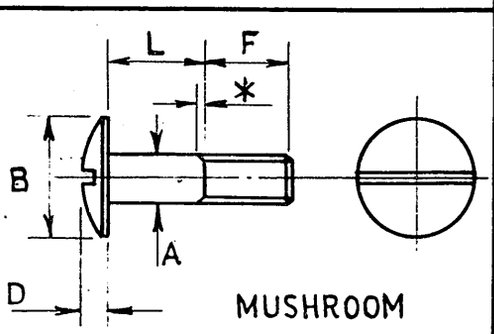


MUSHROOM

| BOLT SIZE | 4 BA | 2 BA | 1/4" BSF | 5/16" BSF | 3/8" BSF | 7/16" BSF | 1/2" BSF |
|---|---|---|---|---|---|---|---|
| L STEEL | ½ TO ·1 ·1 TO 5·3 | ½ TO ·1 ·1 TO 5·3 | ½ TO ·1 ·1 TO 5·4 | ½ TO ·1 ·1 TO 5·4 | | | |
| L L.A. | ½ TO ·1 ·1 TO 3·7 | ½ TO ·1 ·1 TO 3·7 | ½ TO ·1 ·1 TO 3·8 | ½ TO ·1 ·1 TO 3·8 | | | |
| A DIA. | ·1387 ·1417 | ·1820 ·1850 | ·2465 ·2495 | ·3090 ·3120 | | | |
| B | ·375 | ·4375 | ·625 | ·75 | | | |
| D | ·075 | ·10 | ·125 | ·18 | | | |
| F | ·35 | ·40 | ·45 | ·50 | | | |

| BOLT SIZE | 4 BA | 2 BA | 1/4" BSF | 5/16" BSF | 3/8" BSF | 7/16" BSF | 1/2" BSF |
|---|---|---|---|---|---|---|---|
| 2 X PITCH | ·052 | ·064 | ·077 | ·091 | ·10 | ·111 | ·125 |

*

NOTE: ALL BOLTS ON THE EXTERIOR SURFACE OF UN-PAINTED AIRCRAFT MUST BE CHROME PLATED D.H.A.369 AND CALLED UP AS FOLLOWS
e.g. AS.1242/5E D.H.A.369.

ROUND AND MUSHROOM HEAD BOLTS ARE AVAILABLE WITH ONE ADDITIONAL SHORT LENGTH 'L' OF "05 AND WILL BE CALLED UP AS '½'
e.g. A.S. 1242 ½ E.

NOTE ½ SIZES ARE NOT PERPETUATED THROUGHOUT THE RANGE

| ISSUE Nº | DATE |
|---|---|
| 1 | JUNE '54 |
| 2 | MAR. '55 |
| | |
| | |

DRAWN: L. SPENCER.
TRACED: D.P.
APPROVED: [signature]

# BOLTS - SLOTTED 'AS' SERIES

DRAWING OFFICE DATA SHEET Nº 1/5

# THE DE HAVILLAND AIRCRAFT COMPANY LTD., HATFIELD, HERTS.

| | BOLT SIZE | | | 2 B.A. | 1/4" B.S.F. | 5/16" B.S.F. | 3/8" B.S.F. | 7/16" B.S.F. | 1/2" B.S.F. |
|---|---|---|---|---|---|---|---|---|---|
| | IDENT. LETTER | | | C | E | G | J | L | N |
| **D.H.S. 358** H.T.S. S. 96. CHROME D.H.A. 369. | A | | | ·185 ·183 | ·250 ·248 | ·3125 ·3105 | ·375 ·373 | | |
| 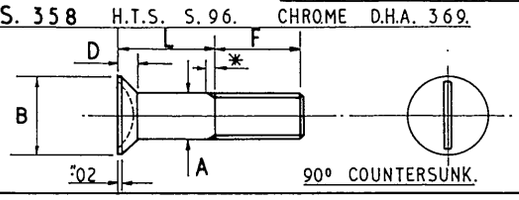 | B | | | ·30 | ·42 | ·53 | ·64 | | |
| | D | | | ·078 | ·105 | ·129 | ·153 | | |
| | F | | | ·40 | ·45 | ·50 | ·60 | | |
| | L | | | ·1 TO | ·2 TO | ·2 TO | ·3 TO | | |
| **D.H.S. 432** H.T.S. S. 96. CHROME D.H.A. 369. | A | | | | ·24925 ·24975 | ·31175 ·31225 | ·37425 ·37475 | ·43675 ·43725 | ·49925 ·49975 |
| 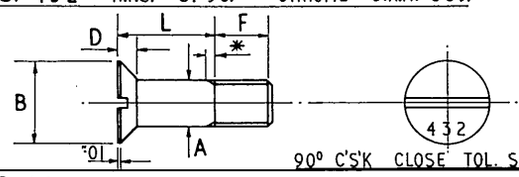 | B | | | | ·44 | ·55 | ·66 | ·76 | ·88 |
| | D | | | | ·105 | ·129 | ·153 | ·171 | ·20 |
| | F | | | | ·28 | ·28 | ·28 | ·28 | ·28 |
| | L | PLAIN LENGTH L AVAILABLE IN ·1 INCREMENTS ONLY. | | | ·3 TO | ·3 TO | ·4 TO | ·4 TO | ·4 TO |
| **D.H.S. 481** H.T.S. S. 98. CHROME D.H.A. 369. | A | | | | | ·31175 ·31225 | ·37425 ·37475 | ·43675 ·43725 | |
| 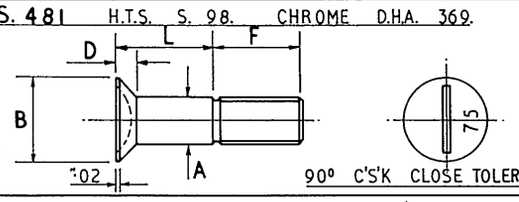 | B | | | | | ·53 | ·64 | ·74 | |
| | D | | | | | ·129 | ·153 | ·171 | |
| | F | | | | | ·47 | ·57 | ·61 | |
| | L | | | | | ·3 TO | ·4 TO | ·4 TO | |
| **D.H.S. 751** LIGHT ALLOY D.T.D. 363 ANODISED. | F | | | | ·45 | | | D.H.S. 751 BOLTS ARE SUITABLE FOR DRIVING INTO ANCHORED STIFFNUTS AND WILL ONLY BE USED UNDER THOSE CONDITIONS. THEY MUST NOT BE USED FOR MAINTENANCE BOLTING. FOR ANY OTHER APPLICATION D.H.S. 363 WILL BE USED. | |
| 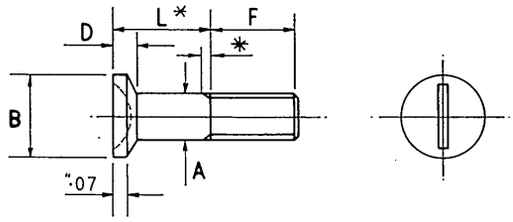 | IDENT. CODE | | | | E | | | | |
| | | | | | | | | | |
| | | | | | | | | | |
| | A | | | | ·250 ·248 | | | | |
| | B | | | | ·43 | | | | |
| | D | | | | ·122 | | | | |
| *L -·05 = INSTALLED LENGTH 120° COUNTERSUNK. | L | | | | ·15 TO | | | | |
| **D.H.S. 363** ORDINARY LIGHT ALLOY. **D.H.S. 393** SEALED D.T.D. 363. ANODISED. | F 1 | FOR FULL NUT | | | ·45 | ·50 | | | |
| 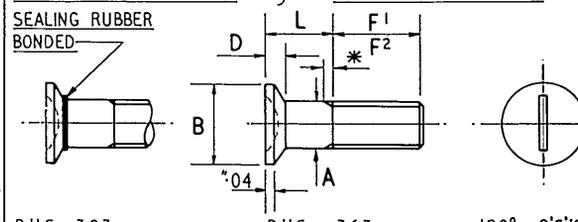 | IDENT. CODE | | | | E | G | | | |
| | F 2 | FOR THIN NUT | | | ·30 | ·35 | | | |
| | IDENT. CODE | | | | EE | GG | | | |
| | A | | | | ·250 ·248 | ·3125 ·3105 | | | |
| | B | | | | ·43 | ·555 | | | |
| | D | | | | ·092 | ·110 | | | |
| D.H.S. 393. D.H.S. 363. 120° C'S'K. | L | | | | ·1 TO | ·2 TO | | | |
| **D.H.S. 365** ORDINARY HIGH TENSILE STEEL. **D.H.S. 395** SEALED S. 96. CHROME D.H.A. 369. | F 1 | FOR FULL NUT | | ·40 | ·45 | ·50 | ·60 | | |
| 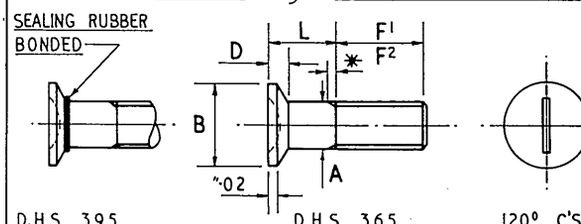 | IDENT. CODE | | | C | E | G | J | | |
| | F 2 | FOR THIN NUT | | ·20 | ·25 | ·30 | ·40 | | |
| | IDENT. CODE | | | CC | EE | GG | JJ | | |
| | A | | | ·185 ·183 | ·250 ·248 | ·3125 ·3105 | ·375 ·373 | | |
| | B | | | ·30 | ·43 | ·555 | ·68 | | |
| | D | | | ·053 | ·072 | ·09 | ·108 | | |
| D.H.S. 395. D.H.S. 365. 120° C'S'K. | L | | | ·1 TO | ·1 TO | ·2 TO | ·3 TO | | |
| **D.H.S. 492** ORDINARY HIGH TENSILE STEEL. **D.H.S. 498** SEALED S 98. CHROME D.H.A. 369. | F 1 | FOR FULL NUT | | | ·45 | ·50 | ·60 | | |
| 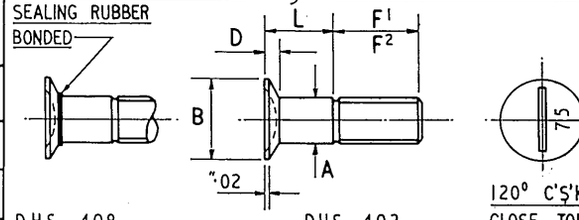 | IDENT. CODE | | | | E | G | J | | |
| | F 2 | FOR THIN NUT | | | ·22 | ·26 | ·30 | | |
| | IDENT. CODE | | | | EE | GG | JJ | | |
| | A | | | | ·24925 ·24975 | ·31175 ·31225 | ·37425 ·37475 | | |
| | B | | | | ·43 | ·555 | ·680 | | |
| | D | - | | | ·072 | ·09 | ·108 | | |
| D.H.S. 498. D.H.S. 492. 120° C'S'K CLOSE TOL. | L | | | | ·3 TO | ·3 TO | ·3 TO | | |

| ISSUE No. | DATE |
|---|---|
| 4 | JUNE '54 |
| 5 | MARCH '55 |
| 6 | JULY '56 |

COMPILED
L. SPENCER.

TRACED
P.G.S.

APPROVED

## NOTES.

1. FOR APPLICATION SEE D.H.S. 526 SHTS 1&2 COUNTERSINKS FOR FLUSH FINISH - BOLTS. (EXCEPT D.H.S. 432)
2. FOR STRENGTH FIGURES SEE DATA SHEETS 111/43'
3. BOLTS WITH FINISH "CHROME DHA 369" HAVE CHROMIUM PLATED HEADS ONLY, THE PLAIN SHANK AND THREAD BEING CADMIUM PLATED. THE LIMITS GIVEN ARE "AFTER PLATING."
4. WITH THE EXCEPTION OF D.H.S. 432, ALL BOLTS GIVEN ON THIS DATA SHEET ARE AVAILABLE IN PLAIN LENTH 'L' INCREMENTS OF ·05 (1/2)
5. MAINTENANCE BOLTS WILL BE 90° C'S'K STEEL ONLY.
6. FOR CLOSE TOL. 120° C'S'K HEAD BOLT (S.96) SEE D.H.S. 888

* ALLOWANCE MUST BE MADE FOR MAX. THREAD RUN-OUT (2 X P) WHEN CALCULATING PLAIN LENGTH 'L'

| BOLT SIZE | 2 B.A. | 1/4" B.S.F. | 5/16" B.S.F. | 3/8" B.S.F. | 7/16" B.S.F. | 1/2" B.S.F. |
|---|---|---|---|---|---|---|
| 2 X PITCH | ·064 | ·077 | ·091 | ·10 | ·111 | ·125 |

# BOLTS - D.H.S. COUNTERSUNK HEAD

DRAWING OFFICE DATA SHEET No. 1/5A

THE DE HAVILLAND AIRCRAFT COMPANY LTD, HATFIELD, HERTS.

# S.B.A.C. "AS" SERIES - BOLTS

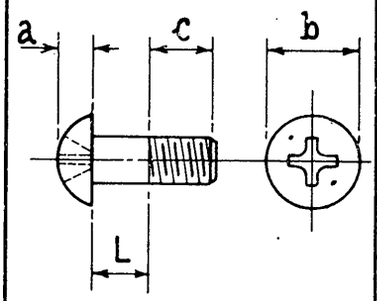


ROUND HEAD

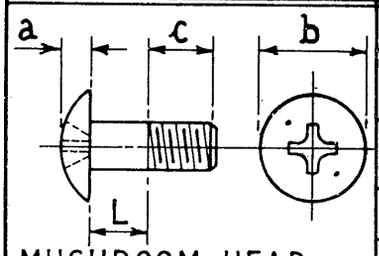


MUSHROOM HEAD

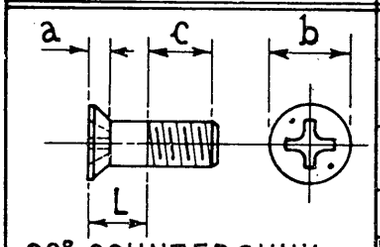


90° COUNTERSUNK

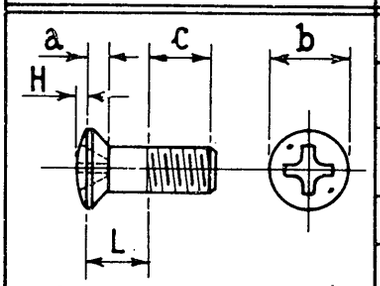


90° RAISED COUNTERS'K

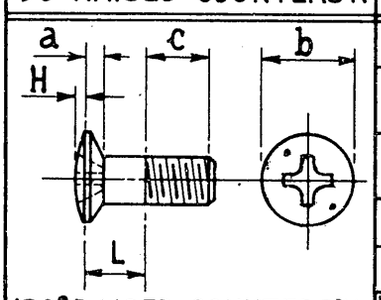


120° RAISED COUNTERS'K

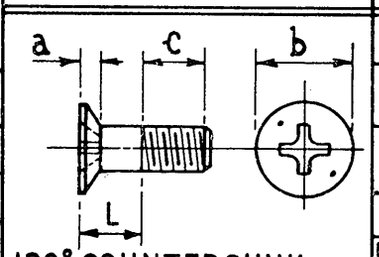


120° COUNTERSUNK

## BOLT SIZES

| | 4 B.A. | 2 B.A. | 1/4" B.S.F. | 5/16" B.S.F. | 3/8" B.S.F. |
|---|---|---|---|---|---|
| L | ·1 to 1·6 | ·1 to 2·1 | ·1 to 2·3 | ·1 to 2·2 | ·1 to 2·1 |
| a | ·106<br>·098 | ·133<br>·124 | ·174<br>·163 | ·214<br>·202 | ·253<br>·239 |
| b | ·268<br>·252 | ·350<br>·332 | ·472<br>·452 | ·591<br>·567 | ·708<br>·681 |
| c | ·33 | ·37 | ·42 | ·47 | ·57 |
| RECESS Nº | 2 | 2 | 3 | 3 | 4 |

| | 4 B.A. | 2 B.A. | 1/4" B.S.F. | 5/16" B.S.F. | 3/8" B.S.F. |
|---|---|---|---|---|---|
| L | ·1 to 1·6 | ·1 to 2·1 | ·1 to 2·3 | ·1 to 2·2 | ·1 to 2·1 |
| a | ·087<br>·077 | ·119<br>·109 | ·150<br>·140 | ·214<br>·200 | ·240<br>·225 |
| b | ·321<br>·305 | ·416<br>·398 | ·568<br>·547 | ·693<br>·669 | ·818<br>·791 |
| c | ·33 | ·37 | ·42 | ·47 | ·57 |
| RECESS Nº | 2 | 2 | 3 | 4 | 4 |

| | 4 B.A. | 2 B.A. | 1/4" B.S.F. | 5/16" B.S.F. | 3/8" B.S.F. |
|---|---|---|---|---|---|
| L | ·1 to 1·6 | ·2 to 2·1 | ·2 to 2·3 | ·3 to 2·2 | ·3 to 2·1 |
| a | ·065<br>·057 | ·079<br>·070 | ·110<br>·100 | ·146<br>·134 | ·161<br>·148 |
| b | ·252<br>·236 | ·324<br>·306 | ·440<br>·419 | ·566<br>·542 | ·648<br>·621 |
| c | ·33 | ·37 | ·42 | ·47 | ·57 |
| RECESS Nº | 2 | 2 | 3 | 4 | 4 |

| | 4 B.A. | 2 B.A. | 1/4" B.S.F. | 5/16" B.S.F. | 3/8" B.S.F. |
|---|---|---|---|---|---|
| L | ·1 to 1·6 | ·2 to 2·1 | ·2 to 2·3 | ·3 to 2·2 | ·3 to 2·1 |
| a | ·065<br>·057 | ·079<br>·070 | ·110<br>·100 | ·146<br>·134 | ·161<br>·148 |
| b | ·252<br>·236 | ·324<br>·306 | ·440<br>·419 | ·566<br>·542 | ·648<br>·621 |
| c | ·33 | ·37 | ·42 | ·47 | ·57 |
| H | ·03 | ·038 | ·051 | ·068 | ·072 |
| RECESS Nº | 2 | 2 | 3 | 4 | 4 |

| | 4 B.A. | 2 B.A. | 1/4" B.S.F. | 5/16" B.S.F. | 3/8" B.S.F. |
|---|---|---|---|---|---|
| L | ·1 to 1·6 | ·1 to 2·1 | ·2 to 2·3 | ·2 to 2·2 | ·3 to 2·1 |
| a | ·056<br>·051 | ·068<br>·063 | ·092<br>·086 | ·115<br>·108 | ·138<br>·130 |
| b | ·284<br>·268 | ·370<br>·352 | ·500<br>·479 | ·625<br>·601 | ·750<br>·723 |
| c | ·33 | ·37 | ·42 | ·47 | ·57 |
| H | ·031 | ·033 | ·047 | ·053 | ·070 |
| RECESS Nº | 2 | 2 | 3 | 4 | 4 |

| | 4 B.A. | 2 B.A. | 1/4" B.S.F. | 5/16" B.S.F. | 3/8" B.S.F. |
|---|---|---|---|---|---|
| L | | ·1 to 2·1 | ·2 to 2·3 | ·2 to 2·2 | ·3 to 2·1 |
| a | | ·068<br>·063 | ·092<br>·086 | ·115<br>·108 | ·138<br>·130 |
| b | | ·370<br>·352 | ·500<br>·479 | ·625<br>·601 | ·750<br>·723 |
| c | | ·37 | ·42 | ·47 | ·57 |
| RECESS Nº | | 2 | 3 | 4 | 4 |

## CODE NUMBERS

| LENGTH "L" | 4 B.A. | 2 B.A. | 1/4" B.S.F. | 5/16" B.S.F. | 3/8" B.S.F. |
|---|---|---|---|---|---|
| ·1 | 1B | 1C | 1E | 1G | 1J |
| ·2 | 2B | 2C | 2E | 2G | 2J |
| ·3 | 3B | 3C | 3E | 3G | 3J |
| ·4 | 4B | 4C | 4E | 4G | 4J |
| ·5 | 5B | 5C | 5E | 5G | 5J |
| ·6 | 6B | 6C | 6E | 6G | 6J |
| ·7 | 7B | 7C | 7E | 7G | 7J |
| ·8 | 8B | 8C | 8E | 8G | 8J |
| ·9 | 9B | 9C | 9E | 9G | 9J |
| 1·0 | 10B | 10C | 10E | 10G | 10J |
| 1·1 | 11B | 11C | 11E | 11G | 11J |
| 1·2 | 12B | 12C | 12E | 12G | 12J |
| 1·3 | 13B | 13C | 13E | 13G | 13J |
| 1·4 | 14B | 14C | 14E | 14G | 14J |
| 1·5 | 15B | 15C | 15E | 15G | 15J |
| 1·6 | 16B | 16C | 16E | 16G | 16J |
| 1·7 | | 17C | 17E | 17G | 17J |
| 1·8 | | 18C | 18E | 18G | 18J |
| 1·9 | | 19C | 19E | 19G | 19J |
| 2·0 | | 20C | 20E | 20G | 20J |
| 2·1 | | 21C | 21E | 21G | 21J |
| 2·2 | | | 22E | 22G | |
| 2·3 | | | 23E | | |

| TYPE OF HEAD | PART Nº |
|---|---|
| ROUND | A.S.4597 |
| MUSHROOM | A.S.4598 |
| 90° COUNTERSUNK | A.S. 3294 |
| 90° RAISED C'S'K. | A.S. 3295 |
| 120° RAISED C'S'K. | A.S. 3296 |
| 120° COUNTERSUNK | A.S. 3297 |

MATERIAL :
HIGH TENSILE STEEL
SPEC : S. 105.
FINISH : CADMIUM.

FINISHES
STANDARD FINISH IS CADMIUM.
SPECIAL FINISHES WILL BE CALLED FOR AGAINST THE BALLOON.
e.g. (AS 3294 5E) PARKERISE P.10. MATT BLACK.
FOR CHROME FINISH ON EXTERNAL BOLTS SEE DATA SHEET Nº 1/5

| ISSUE Nº | DATE |
|---|---|
| 4 | JAN. '53 |
| 5 | MAR '55 |
| | |
| | |
| | |

COMPILED
L. SPENCER

TRACED
DOLTON DRG. CO.
6. 10. 1952

APPROVED

METHOD OF CALLING UP.

A HIGH TENSILE STEEL 90° C'S'K "PHILLIPS" RECESS BOLT "5 PLAIN LENGTH × 1/4" B.S.F. WILL BE AS.3294/5E.

## "PHILLIPS" RECESS HEAD BOLTS

DRAWING OFFICE DATA SHEET Nº 1/5B

# THE DE HAVILLAND AIRCRAFT COMPANY LTD., HATFIELD, HERTS.

## S. B. A. C. "A.S." SERIES — SCREWS

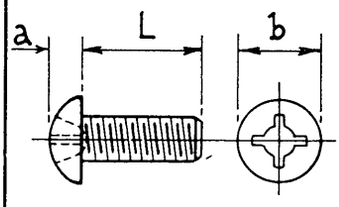


ROUND HEAD

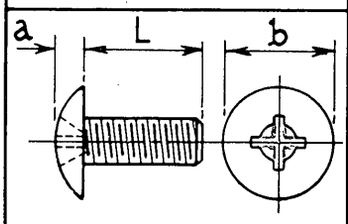


MUSHROOM HEAD

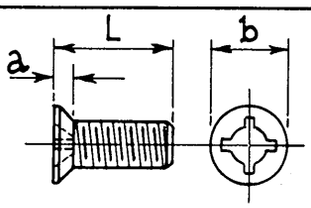


90° COUNTERSUNK

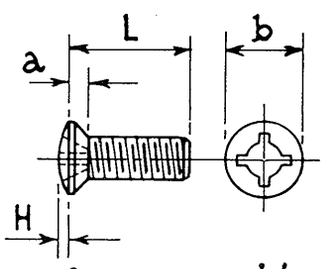


90° RAISED C'S'K

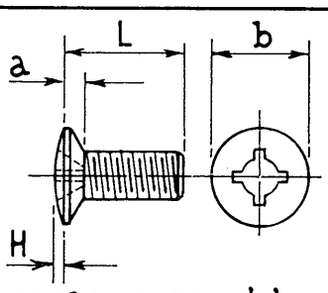


120° RAISED C'S'K

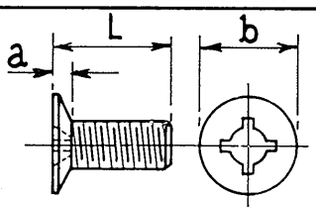


120° COUNTERSUNK

| SCREW SIZES | | 6 B.A | 4 B.A | 2 B.A | 1/4" B.S.F. | 5/16" B.S.F. | 3/8" B.S.F. |
|---|---|---|---|---|---|---|---|
| ROUND HEAD | L | ·3 TO 1·0 | ·3 TO 1·0 | ·3 TO 1·0 | ·4 TO 1·0 | ·5 TO 1·0 | ·5 TO 1·0 |
| | a | ·085 ·077 | ·106 ·098 | ·133 ·124 | ·174 ·163 | ·214 ·202 | ·253 ·239 |
| | b | ·208 ·193 | ·268 ·252 | ·350 ·332 | ·472 ·451 | ·591 ·567 | ·708 ·681 |
| | RECESS Nº | 1 | 2 | 2 | 3 | 3 | 4 |
| MUSHROOM HEAD | L | | ·4 TO 1·0 | ·4 TO 1·0 | ·5 TO 1·0 | ·6 TO 1·0 | ·6 TO 1·0 |
| | a | | ·087 ·077 | ·119 ·109 | ·150 ·140 | ·214 ·200 | ·240 ·225 |
| | b | | ·321 ·305 | ·416 ·398 | ·568 ·547 | ·693 ·669 | ·818 ·791 |
| | RECESS Nº | | 2 | 2 | 3 | 4 | 4 |
| 90° COUNTERSUNK | L | ·3 TO 1·0 | ·3 TO 1·0 | ·3 TO 1·0 | ·4 TO 1·0 | ·5 TO 1·0 | ·5 TO 1·0 |
| | a | ·052 ·045 | ·065 ·057 | ·079 ·070 | ·110 ·100 | ·146 ·134 | ·161 ·148 |
| | b | ·194 ·179 | ·252 ·236 | ·324 ·306 | ·440 ·419 | ·566 ·542 | ·648 ·621 |
| | RECESS Nº | 1 | 2 | 2 | 3 | 4 | 4 |
| 90° RAISED C'S'K | L | ·3 TO 1·0 | ·3 TO 1·0 | ·3 TO 1·0 | ·4 TO 1·0 | ·5 TO 1·0 | ·5 TO 1·0 |
| | a | ·052 ·045 | ·065 ·057 | ·079 ·070 | ·110 ·100 | ·146 ·134 | ·161 ·148 |
| | b | ·194 ·179 | ·252 ·236 | ·324 ·306 | ·440 ·419 | ·566 ·542 | ·648 ·621 |
| | H | ·023 | ·030 | ·038 | ·051 | ·068 | ·072 |
| | RECESS Nº | 1 | 2 | 2 | 3 | 4 | 4 |
| 120° RAISED C'S'K | L | | ·4 TO 1·0 | ·4 TO 1·0 | ·5 TO 1·0 | ·6 TO 1·0 | ·6 TO 1·0 |
| | a | | ·056 ·051 | ·068 ·063 | ·092 ·086 | ·115 ·108 | ·138 ·130 |
| | b | | ·284 ·268 | ·370 ·352 | ·500 ·479 | ·625 ·601 | ·750 ·723 |
| | H | | ·031 | ·033 | ·047 | ·053 | ·070 |
| | RECESS Nº | | 2 | 2 | 3 | 4 | 4 |
| 120° COUNTERSUNK | L | | | ·4 TO 1·0 | ·5 TO 1·0 | ·6 TO 1·0 | |
| | a | | | ·068 ·063 | ·092 ·086 | ·115 ·108 | |
| | b | | | ·370 ·352 | ·500 ·479 | ·625 ·601 | |
| | RECESS Nº | | | 2 | 3 | 4 | |

| LENGTH "L" | PART NUMBERS 6 B.A | 4 B.A | 2 B.A | 1/4" B.S.F. | 5/16" B.S.F. | 3/8" B.S.F. |
|---|---|---|---|---|---|---|
| ·3 | 3A | 3B | 3C | | | |
| ·4 | 4A | 4B | 4C | | | |
| ·5 | 5A | 5B | 5C | 5E | 5G | 5J |
| ·6 | 6A | 6B | 6C | 6E | 6G | 6J |
| ·7 | 7A | 7B | 7C | 7E | 7G | 7J |
| ·8 | 8A | 8B | 8C | 8E | 8G | 8J |
| ·9 | 9A | 9B | 9C | 9E | 9G | 9J |
| 1·0 | 10A | 10B | 10C | 10E | 10G | 10J |

| TYPE OF HEAD | PART Nº |
|---|---|
| ROUND HEAD | A.S. 2991 |
| MUSHROOM | A.S. 2992 |
| 90° COUNTERSUNK | A.S. 2993 |
| 90° RAISED C'S'K | A.S. 2994 |
| 120° RAISED C'S'K | A.S. 2995 |
| 120° COUNTERSUNK | A.S. 2996 |

### METHOD OF CALLING UP.

A 90° C'S'K SCREW ·5 LONG × 2 B.A. WILL BE :-

A.S.2993 / 5 / C

| BASIC DRAWING NUMBER | OVERALL LENGTH "L" IN TENTHS OF AN INCH | SYMBOL FOR SHANK DIA |
|---|---|---|

| ISSUE Nº | DATE |
|---|---|
| 3 | JAN.'53 |
| | |
| | |
| | |

COMPILED
L. SPENCER

TRACED
DOLTON DRG Co.
15 · 9 · 1952

APPROVED

### NOTES :-

THESE SCREWS ARE AIRCRAFT QUALITY BUT MADE FROM COMMERCIAL STEEL OF 25 TONS U.T.S. AND MUST NOT BE USED WHERE IN THE EVENT OF FAILURE THE SAFETY OF THE AIRCRAFT WOULD BE AFFECTED.

FINISH

THE STANDARD FINISH IS CADMIUM BUT WHERE SPECIAL FINISHES ARE REQUIRED THEY WILL BE CALLED FOR AGAINST THE BALLOON.

eg. A.S. 2993 5/C — PARKERISE P.10 MATT. BLACK

## "PHILLIPS" RECESS HEAD SCREWS

DRAWING OFFICE DATA SHEET Nº 1/5C

# THE DE HAVILLAND AIRCRAFT COMPANY LTD., HATFIELD, HERTS.

## LOW TENSILE SCREWS — BASIC PART NUMBERS

| COMM'L QUALITY MAT'L | MILD STEEL | STAINLESS | ALUM. ALLOY | BRASS |
|---|---|---|---|---|
| MIN. TENSILE STRENGTH | 25 TONS | 35 | 20 | 20 |
| FINISH | CADMIUM | — | ANODIC | TINNED |
| CHEESE HEAD | A 31 | A 35 | A 39 | A 43 |
| ROUND HEAD | A 32 | A 36 | A 40 | A 44 |
| 90° C'S'K HEAD | A 33 | A 37 | A 41 | A 45 |
| 90° RAISED C'S'K | A 34 | A 38 | A 42 | A 46 |

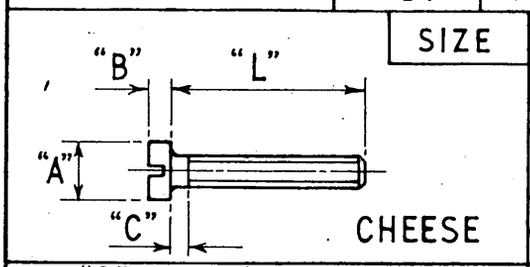


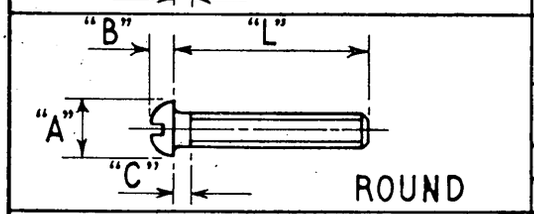


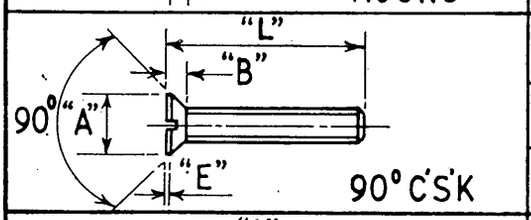


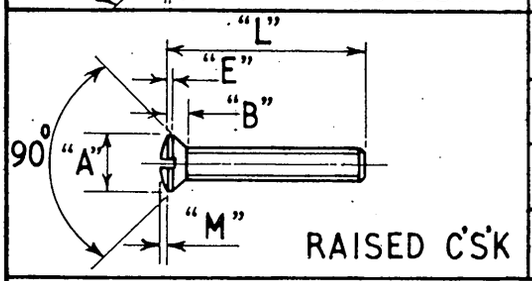


| SIZE | 2 B.A. | 4 B.A. | 6 B.A |
|---|---|---|---|
| DIA. "A" | ·319 ·309 | ·252 ·242 | ·194 ·184 |
| "B" | ·130 ·123 | ·101 ·095 | ·078 ·073 |
| "C" | ·050 | ·040 | ·030 |
| "C1" | ·090 | ·070 | ·050 |
| DIA. "A" | ·319 ·309 | ·252 ·242 | ·194 ·184 |
| "B" | ·130 ·123 | ·101 ·095 | ·078 ·073 |
| "C" | ·050 | ·040 | ·030 |
| "C1" | ·090 | ·070 | ·050 |
| DIA. "A" | ·319 ·309 | ·252 ·242 | ·194 ·184 |
| "B" | ·077 | ·065 | ·051 |
| "E" | ·010 | ·010 | ·009 |
| DIA. "A" | ·319 ·309 | ·252 ·242 | ·194 ·184 |
| "B" | ·077 | ·065 | ·051 |
| "E" | ·010 | ·010 | ·009 |
| "M" | ·036 | ·029 | ·023 |

## PART Nº LENGTH & DIA.

| LENGTH "L" | 2 B.A. | 4 B.A. | 6 B.A. |
|---|---|---|---|
| 1/8" | | | A 4 |
| 3/16" | C 6 | B 6 | A 6 |
| 1/4" | C 8 | B 8 | A 8 |
| 5/16" | C 10 | B 10 | A 10 |
| 3/8" | C 12 | B 12 | A 12 |
| 7/16" | C 14 | B 14 | A 14 |
| 1/2" | C 16 | B 16 | A 16 |
| 9/16" | | | A 18 |
| 5/8" | C 20 | B 20 | A 20 |
| 3/4" | C 24 | B 24 | A 24 |
| 7/8" | C 28 | B 28 | A 28 |
| 1" | C 32 | B 32 | A 32 |
| 1 1/8" | C 36 | B 36 | A 36 |
| 1 1/4" | C 40 | B 40 | A 40 |
| 1 3/8" | C 44 | B 44 | A 44 |
| 1 1/2" | C 48 | B 48 | A 48 |

PLAIN LENGTH "C" & "C1"

ROUND AND CHEESE HEAD SCREWS ABOVE THE HEAVY LINE HAVE PLAIN LENGTH "C" AND THOSE BELOW "C1."

## NOTES

1. THESE SCREWS ARE AIRCRAFT QUALITY BUT MANUFACTURED FROM COMMERCIAL MATERIAL.
2. THE ABOVE RANGE OF SCREWS INCLUDE 8, 10 & 12 B.A. SIZES AND INFORMATION MAY BE OBTAINED BY REFERRING TO THE RELEVANT SPECIFICATION.

## METHOD OF CALLING UP

A ROUND HEAD MILD STEEL SCREW 2 B.A. x 3/4" LONG IS :- A.32.C.24.

| PART NUMBER | COMMERCIAL MATERIAL | FINISH |
|---|---|---|
| A.55 | MILD STEEL | CADMIUM |
| A.56 | STAINLESS | — |

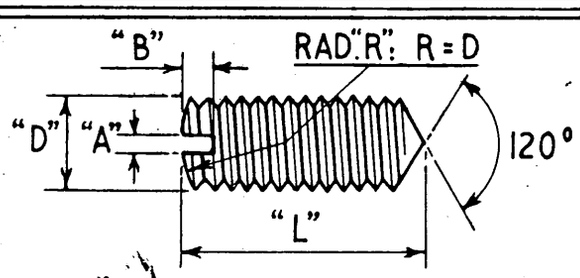


| DIA. SIZE | DIA. "D" | WIDTH OF SLOT "A" MIN. | WIDTH OF SLOT "A" MAX. | DEPTH OF SLOT "B" MIN. | DEPTH OF SLOT "B" MAX. | PART NUMBERS - LENGTH "L" -:0 +:030 3/16" | 1/4" | 5/16" | 3/8" | 1/2" | 5/8" | 3/4" | 7/8" |
|---|---|---|---|---|---|---|---|---|---|---|---|---|---|
| 6 B.A. | ·110 | ·025 | ·031 | ·030 | ·050 | A 3 | A 4 | A 5 | A 6 | A 8 | | | |
| 4 B.A. | ·142 | ·029 | ·035 | ·040 | ·065 | | B 4 | B 5 | B 6 | B 8 | B 10 | | |
| 2 B.A | ·185 | ·037 | ·043 | ·050 | ·080 | | | C 5 | C 6 | C 8 | C 10 | C 12 | |
| 1/4" B.S.F. | ·25 | ·054 | ·060 | ·070 | ·100 | | | | E 6 | E 8 | E 10 | E 12 | E 14 |

## METHOD OF CALLING UP

A MILD STEEL GRUB SCREW 4 B.A. x 1/2" LONG IS A.55.B8.

| ISSUE Nº | DATE |
|---|---|
| 1 | MAY '51 |

COMPILED: L. SPENCER

TRACED: DOLTON DRAWING CO. 2 · 6 · 1951

APPROVED

# SCREWS, SLOTTED & GRUB.

DRAWING OFFICE DATA SHEET Nº 1/5 D

# THE DE HAVILLAND AIRCRAFT COMPANY LTD., HATFIELD, HERTS.

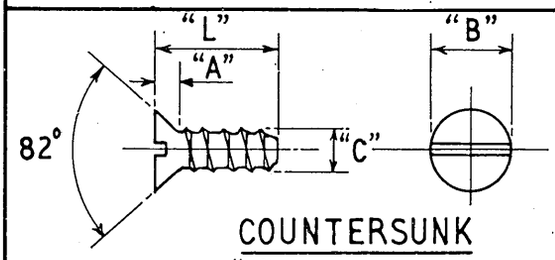


COUNTERSUNK
(TYPE "Z" SHANK ILLUSTRATED)

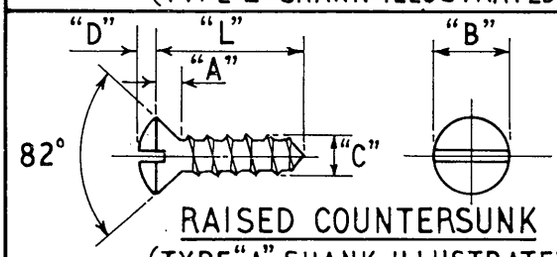


RAISED COUNTERSUNK
(TYPE "A" SHANK ILLUSTRATED)

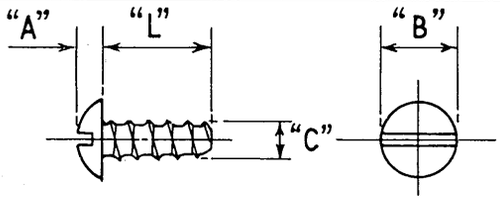


ROUND HEAD

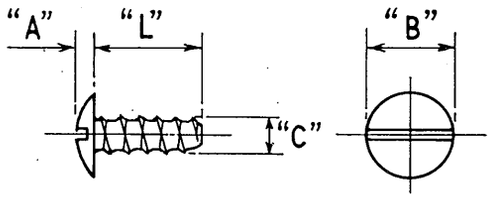


MUSHROOM HEAD

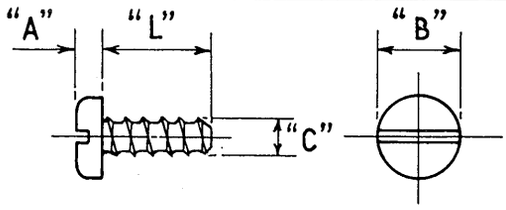


BINDING HEAD

| SCREW SIZES | | | | LENGTHS "L" AVAILABLE | | | | | |
|---|---|---|---|---|---|---|---|---|---|
| | Nº 4 | Nº 6 | Nº 8 | Nº 4 | | Nº 6 | | Nº 8 | |
| | | | | TYPE "A" | TYPE "Z" | TYPE "A" | TYPE "Z" | TYPE "A" | TYPE "Z" |
| A | ·06 | ·08 | ·09 | | | | | | |
| B | ·221 | ·265 | ·311 | | 3/16" | | 3/16" | | |
| C | ·112 | ·137 | ·163 | 1/4" | 1/4" | 1/4" | 1/4" | | 1/4" |
| A | ·06 | ·08 | ·09 | | 5/16" | | 5/16" | | 5/16" |
| B | ·221 | ·265 | ·311 | 3/8" | 3/8" | 3/8" | 3/8" | 3/8" | 3/8" |
| C | ·112 | ·137 | ·163 | 1/2" | 1/2" | 1/2" | 1/2" | 1/2" | 1/2" |
| D | ·029 | ·035 | ·041 | 5/8" | 5/8" | 5/8" | 5/8" | 5/8" | 5/8" |
| A | ·078 | ·094 | ·110 | 3/4" | 3/4" | 3/4" | 3/4" | 3/4" | 3/4" |
| B | ·207 | ·248 | ·292 | 7/8" | | 7/8" | 7/8" | 7/8" | 7/8" |
| C | ·112 | ·137 | ·163 | | | 1" | 1" | 1" | 1" |
| | | | | | | 1 1/4" | 1 1/4" | 1 1/4" | 1 1/4" |
| A | | ·073 | ·088 | | | 1 1/2" | | 1 1/2" | 1 1/2" |
| B | | ·308 | ·363 | | | | | | |
| C | | ·137 | ·163 | | | | | | |
| | | | | | | | | | |
| A | ·062 | ·074 | ·087 | | | | | | |
| B | ·221 | ·265 | ·311 | | | | | | |
| C | ·112 | ·137 | ·163 | | | | | | |
| | | | | | | | | | |

COUNTERSUNK & RAISED HEAD SCREWS ABOVE THE HEAVY LINE ARE SUPPLIED WITH THE NEXT SMALLER HEAD SIZE.
e.g. Nº 4 HAS Nº 2 HEAD, Nº 6 HAS Nº 4 HEAD & Nº 8 HAS Nº 7 HEAD.

| THICKNESS OF MATERIAL | | 24 S.W.G. | 22 S.W.G. | 20 S.W.G. | 18 S.W.G. | 16 S.W.G. | LIGHT ALLOY CASTINGS & PLASTIC MOULDINGS |
|---|---|---|---|---|---|---|---|
| TAPPING DIAMETER (DRILL SIZE) | Nº 4 SCREW | Nº 44 | Nº 43 | Nº 42 | Nº 41 | Nº 39 | Nº 39 |
| | Nº 6 SCREW | Nº 37 | Nº 36 | Nº 35 | Nº 34 | Nº 32 | Nº 30 |
| | Nº 8 SCREW | Nº 32 | Nº 32 | Nº 32 | Nº 30 | Nº 29 | Nº 25 |

TYPE "A" SCREWS. ARE ONLY USED FOR JOINING LIGHT SHEET METAL ASSEMBLIES AND MUST NOT BE USED FOR GAUGES THICKER THAN 18 S.W.G.

TYPE "Z" SCREWS ARE TO BE USED FOR JOINING SHEETS THICKER THAN 18 S.W.G. AND FOR SCREWING INTO BLIND HOLES IN CASTINGS.

NOTE: BOTH TYPES OF SCREW ARE THREADED OVER THEIR ENTIRE LENGTH. IT IS IMPORTANT TO USE THE CORRECT SIZE OF TAPPING HOLE.

FINISHES: CADMIUM PLATED, CHROMIUM PLATED, NICKEL PLATED, BRASS PLATED OR COPPER PLATED, THE REQUIRED FINISH IS TO BE CALLED FOR.

METHOD OF CALLING UP.

EXAMPLE (TYPE A Nº 4 x 1/4") "PARKER-KALON" ROUND HEAD SCREW CADMIUM PLATED

| ISSUE Nº | DATE |
|---|---|
| 1 | MAY '51 |
| | |
| | |
| | |

COMPILED
L. SPENCER
TRACED
DOLTON DRAWING Co.
13 · 6 · 1951
APPROVED

# PARKER-KALON SELF TAPPING SCREWS

DRAWING OFFICE DATA SHEET Nº 1/5E

# THE DE HAVILLAND AIRCRAFT COMPANY LTD., HATFIELD, HERTS.

**D.H.S.957** H.T.S. S.96 CADMIUM PLATE
**D.H.S.958** H.T.S. S.96 CHROMIUM PLATE TO D.H.A.369

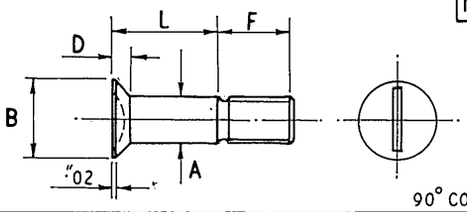


| BOLT SIZE | | 2 BA | 1/4" B.S.F. | 5/16" B.S.F. | 3/8" B.S.F. | 7/16" B.S.F. | 1/2" B.S.F. |
|---|---|---|---|---|---|---|---|
| IDENT. LETTER | | C | E | G | J | L | N |
| A | | ·185 ·183 | ·250 ·248 | ·3125 ·3105 | ·375 ·373 | | |
| B | | ·30 | ·42 | ·53 | ·64 | | |
| D | | ·078 | ·105 | ·129 | ·153 | | |
| F | | ·37 | ·42 | ·47 | ·57 | | |
| L | | ·15 TO | ·15 TO | ·2 TO | ·2 TO | | |

**D.H.S.980** H.T.S. S.98 CADMIUM PLATE
**D.H.S.981** H.T.S. S.98 CHROMIUM PLATE TO D.H.A.369

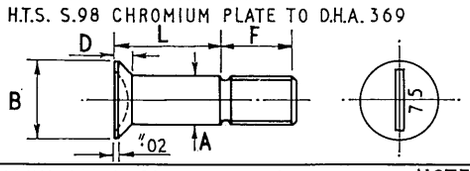


| | | | | | | | |
|---|---|---|---|---|---|---|---|
| A | | | | ·31225 ·31175 | ·37475 ·37425 | ·43725 ·43675 | |
| B | | | | ·53 | ·64 | ·74 | |
| D | | | | ·129 | ·153 | ·171 | |
| F | | | | ·47 | ·57 | ·61 | |
| L | | | | ·3 TO | ·4 TO | ·4 TO | |

**D.H.S.951** ALUM ALLOY D.T.D. 363 ANODISED

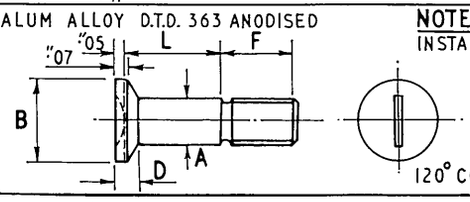


NOTE DIMN 'L' = INSTALLED LENGTH.

| | | | | |
|---|---|---|---|---|
| A | | | ·250 ·248 | D.H.S.951 BOLTS ARE SUITABLE FOR DRIVING INTO ANCHORED STIFFNUTS AND WILL ONLY BE USED UNDER THOSE CONDITIONS. THEY MUST NOT BE USED FOR MAINTENANCE BOLTING. FOR ANY OTHER APPLICATION D.H.S. 963 WILL BE USED. |
| B | | | ·43 | |
| D | | | ·122 | |
| F | | | ·40 | |
| L | | | ·15 TO | |

**D.H.S.963** ORDINARY } ALUM ALLOY D.T.D. 363 ANODISED
**D.H.S.993** SEALED }
SEALING RUBBER BONDED TO BOLT

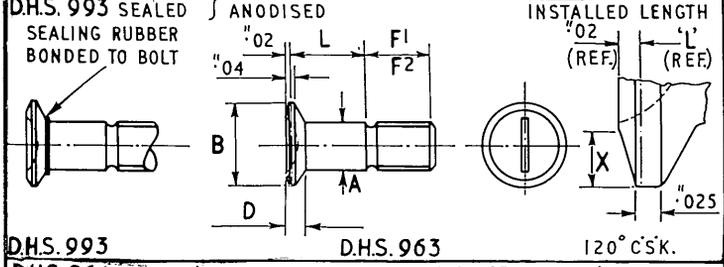


NOTE DIMN 'L' = INSTALLED LENGTH

| | | | | | | | |
|---|---|---|---|---|---|---|---|
| F1 | FOR FULL NUT | | ·38 | ·45 | | | |
| IDENT. CODE | | | E | G | | | |
| F2 | FOR THIN NUT D.H.S.983 | | ·25 | ·26 | | | |
| IDENT. CODE | | | EE | GG | | | |
| A | | | ·250 ·248 | ·3125 ·3105 | | | |
| B | | | ·43 | ·555 | | | |
| D | | | ·092 | ·110 | | | |
| CHAMFER X | | | ·05 ·035 | ·09 ·095 | | | |
| L | | | ·15 TO | ·2 TO | | | |

**D.H.S.964** ORDINARY } H.T.S. S.96 CADMIUM PLATE
**D.H.S.994** SEALED }
SEALING RUBBER BONDED TO BOLT

**D.H.S.965** ORDINARY } H.T.S. S.96 CHROMIUM PLATE TO D.H.A. 369.
**D.H.S.995** SEALED }

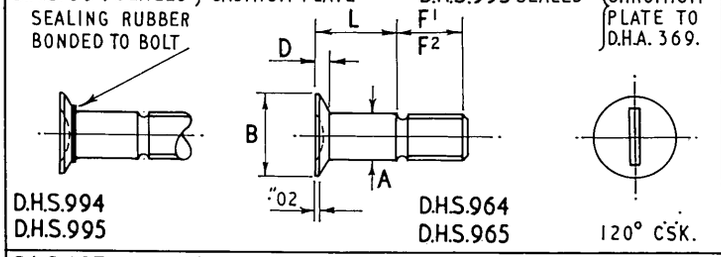


| | | | | | | |
|---|---|---|---|---|---|---|
| F1 | FOR FULL NUT | ·32 | ·38 | ·45 | ·54 | NOTE: FOR 2BA. SIZE USE B.S. A 27 STEEL NUT WITH WASHER TO CLEAR UNDERCUT. |
| IDENT. CODE | | C | E | G | J | |
| F2 | FOR THIN NUT D.H.S.983 | ·20 | ·25 | ·26 | ·30 | |
| IDENT. CODE | | CC | EE | GG | JJ | |
| A | | ·185 ·183 | ·250 ·248 | ·3125 ·3105 | ·375 ·373 | |
| B | | ·30 | ·43 | ·555 | ·68 | |
| D | | ·053 | ·072 | ·090 | ·108 | |
| L | | ·10 TO | ·15 TO | ·15 TO | ·15 TO | |

**D.H.S.987** ORDINARY } H.T.S. S.96 CADMIUM PLATE
**D.H.S.989** SEALED }
SEALING RUBBER BONDED TO BOLT

**D.H.S.988** ORDINARY } H.T.S. S.96 CHROMIUM PLATE TO D.H.A. 369.
**D.H.S.990** SEALED }

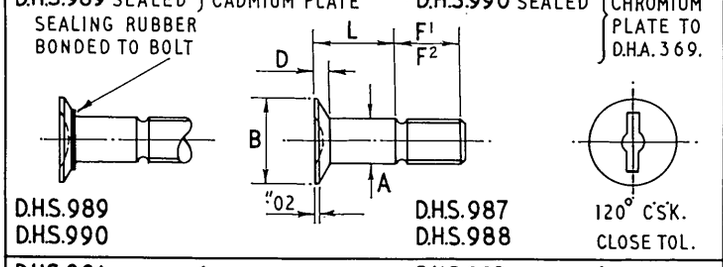


| | | | | | | |
|---|---|---|---|---|---|---|
| F1 | FOR FULL NUT | | ·38 | ·45 | ·54 | |
| IDENT. CODE | | | E | G | J | |
| F2 | FOR THIN NUT D.H.S.983 | | ·25 | ·26 | ·30 | |
| IDENT. CODE | | | EE | GG | JJ | |
| A | | | ·24975 ·24925 | ·31225 ·31175 | ·37475 ·37425 | |
| B | | | ·430 | ·555 | ·680 | |
| D | | | ·072 | ·090 | ·108 | |
| L | | | ·2 TO | ·2 TO | ·3 TO | |

**D.H.S.991** ORDINARY } H.T.S. S.98 CADMIUM PLATE
**D.H.S.997** SEALED }
SEALING RUBBER BONDED TO BOLT

**D.H.S.992** ORDINARY } H.T.S. S.98 CHROMIUM PLATE TO D.H.A. 369.
**D.H.S.998** SEALED }

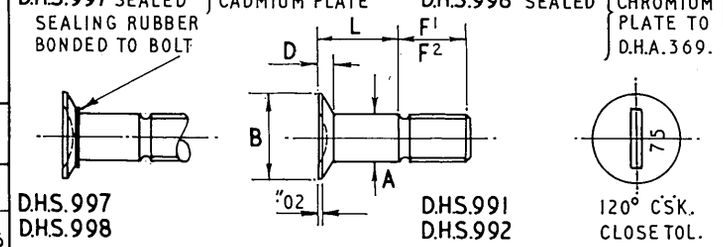


| | | | | | | |
|---|---|---|---|---|---|---|
| F1 | FOR FULL NUT | | ·38 | ·45 | ·54 | |
| IDENT. CODE | | | E | G | J | |
| F2 | FOR THIN NUT D.H.S.983 | | ·25 | ·26 | ·30 | |
| IDENT. CODE | | | EE | GG | JJ | |
| A | | | ·24975 ·24925 | ·31225 ·31175 | ·37475 ·37425 | |
| B | | | ·43 | ·555 | ·680 | |
| D | | | ·072 | ·090 | ·108 | |
| L | | | ·2 TO | ·2 TO | ·3 TO | |

| ISSUE Nº | DATE |
|---|---|
| 1 | AUG. '55 |
| 2 | JULY '56 |

COMPILED: T. EVANS.
TRACED: D.P.
APPROVED: [signature]

## NOTES.

1. FOR APPLICATION SEE D.H.S. 556 SHTS 1 & 2 "COUNTERSINKS FOR FLUSH FINISH - BOLTS".
2. FOR STRENGTH FIGURES SEE DATA SHEETS III/43.
3. BOLTS WITH FINISH "CHROME TO D.H.A. 369" HAVE CHROMIUM PLATED HEADS ONLY. THE PLAIN SHANK AND THREAD BEING CADMIUM PLATED. THE LIMITS GIVEN ARE "AFTER PLATING".
4. ALL BOLTS GIVEN ON THIS DATA SHEET ARE AVAILABLE IN LENGTH 'L' INCREMENTS OF ·05.
5. MAINTENANCE BOLTS WILL BE 90° C'S'K. STEEL ONLY.
6. WHERE THIN NUTS OTHER THAN D.H.S. 983 ARE REQUIRED A WASHER IS NECESSARY TO CLEAR THE UNDERCUT.

THESE BOLTS ARE INTRODUCED PRIMARILY FOR COMET IV AND DIFFER FROM THOSE ON 1/5A HAVING A RADIUSED HEAD TO SUIT C'S'K. 556. ALSO THE SPECIAL UNDERCUT FOR USE WITH D.H.S. 983 NUTS. THEY CAN BE USED WITH CSK DHS 526 & ON OTHER A/C TYPES AT THE DISCRETION OF DESIGNER IN CHARGE.

# BOLTS - D.H.S. COUNTERSUNK HEAD

DRAWING OFFICE DATA SHEET Nº **1/5F**

# THE DE HAVILLAND AIRCRAFT COMPANY LTD. HATFIELD, HERTS.

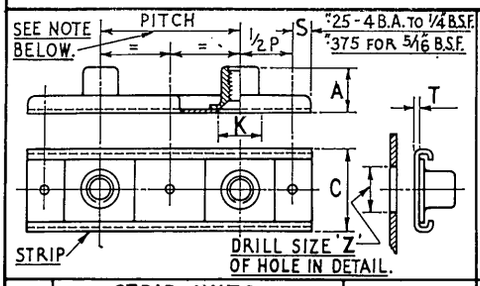


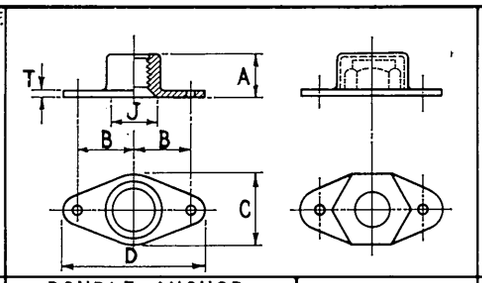


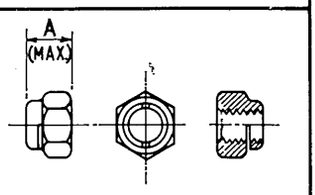


ALL OTHER DIMENSIONS ARE STANDARD TO B.S.A.27.

| SIZE OF THREAD | STRIP NUTS: STANDARD A.G.S.2015 MARK Nº | DIM. A | THIN A.G.S.2016 MARK Nº | DIM. A | COUNTERSUNK A.G.S.2017 MARK Nº | DIM. A | DIA. K | COMMON DIMENSIONS C | T | Z | DOUBLE ANCHOR: STANDARD A.G.S.2007 MARK Nº | DIM. A | THIN A.G.S.2008 MARK Nº | DIM. A | COUNTERSUNK A.G.S.2009 MARK Nº | DIM. A | DIA. J | COMMON DIMENSIONS B | C | D | T | HEXAGON: STANDARD A.G.S.2001 MARK Nº | DIM. A | THIN A.G.S.2002 MARK Nº | DIM. A | SIZE OF THREAD |
|---|---|---|---|---|---|---|---|---|---|---|---|---|---|---|---|---|---|---|---|---|---|---|---|---|---|---|
| 6 B.A. | | | | | | | | | | | A | ·241 | A | ·201 | A | ·241 | ·193 | ·25 | ·27 | ·70 | ·056 | A | ·176 | A | ·131 | 6 B.A. |
| 4 B.A. | B | ·28 | B | ·235 | B | ·28 | ·172 | ·60 | ·028 | Nº 11 | B | ·284 | B | ·237 | B | ·284 | ·248 | ·35 | ·38 | ·94 | ·065 | B | ·217 | B | ·169 | 4 B.A. |
| 2 B.A. | C | ·345 | C | ·285 | C | ·345 | ·234 | ·60 | ·028 | F | C | ·35 | C | ·29 | C | ·35 | ·324 | ·35 | ·43 | ·95 | ·065 | C | ·29 | C | ·218 | 2 B.A. |
| ¼" B.S.F. | E | ·39 | E | ·325 | E | ·39 | ·312 | ·765 | ·028 | P | E | ·402 | E | ·335 | E | ·402 | ·443 | ·50 | ·58 | 1·32 | ·072 | E | ·34 | E | ·251 | ¼" B.S.F. |
| 5/16" B.S.F. | G | ·473 | G | ·400 | G | ·473 | ·375 | 1·02 | ·036 | W | G | ·473 | G | ·397 | G | ·473 | ·525 | ·55 | ·612 | 1·42 | ·072 | G | ·40 | G | ·305 | 5/16" B.S.F. |
| 3/8" B.S.F. | | | | | | | | | | | J | ·549 | J | ·445 | J | ·549 | ·60 | ·55 | ·70 | 1·42 | ·082 | J | ·49 | J | ·361 | 3/8" B.S.F. |
| 7/16" B.S.F. | | | | | | | | | | | L | ·629 | L | ·504 | L | ·629 | ·704 | ·625 | ·792 | 1·65 | ·082 | L | ·555 | L | ·42 | 7/16" B.S.F. |
| ½" B.S.F. | PITCH. 4 B.A. & 2 B.A. —: "8, 1", 2", 3". ¼" B.S.F. & 5/16" B.S.F. —: 1", 2", 3". | | | | | | | | | | N | ·721 | N | ·565 | N | ·721 | ·818 | ·70 | ·912 | 1·80 | ·082 | N | ·665 | N | ·481 | ½" B.S.F. |
| ⅝" B.S.F. | | | | | | | | | | | | | | | | | | | | | | Q | ·799 | Q | ·592 | ⅝" B.S.F. |
| ¾" B.S.F. | | | | | | | | | | | | | | | | | | | | | | S | ·961 | S | ·711 | ¾" B.S.F. |

NOTE: SIZES OF RIVET HOLES IN ANCHOR & STRIPNUTS ARE:- 6 B.A. = 1/16" DIA., 4 B.A. TO ¼" B.S.F. = 3/32" DIA., 5/16" B.S.F. TO ½" B.S.F. = ⅛" DIA.

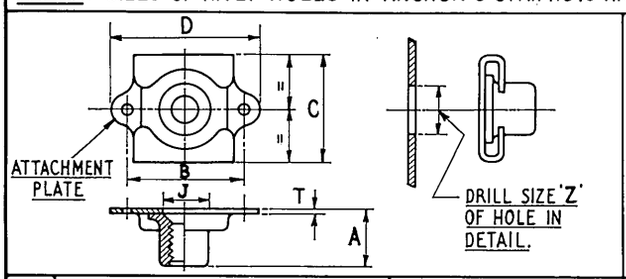


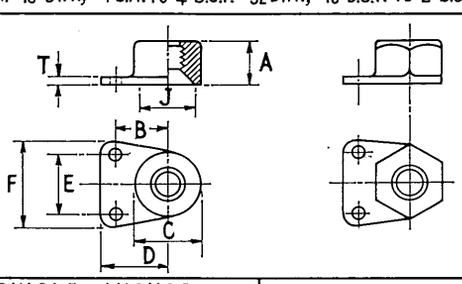


| SIZE OF THREAD | FLOATING ANCHOR: STANDARD A.G.S.2012 MARK Nº | DIM. A | THIN A.G.S.2013 MARK Nº | DIM. A | COUNTERSUNK A.G.S.2014 MARK Nº | DIM. A | DIA. J | COMMON DIMENSIONS B | C | D | T | DRILL SIZE Z | SINGLE ANCHOR: STANDARD A.G.S.2018 MARK Nº | DIM. A | THIN A.G.S.2019 MARK Nº | DIM. A | COUNTERSUNK A.G.S.2020 MARK Nº | DIM. A | DIA. J | COMMON DIMENSIONS B | C | D | E | F | T | SIZE OF THREAD |
|---|---|---|---|---|---|---|---|---|---|---|---|---|---|---|---|---|---|---|---|---|---|---|---|---|---|---|
| 6 B.A. | A | ·23 | A | ·20 | A | ·23 | ·14 | ·50 | ·432 | ·70 | ·036 | Nº21 | A | ·241 | A | ·201 | A | ·241 | ·193 | ·25 | ·284 | ·35 | ·19 | ·37 | ·056 | 6 B.A. |
| 4 B.A. | B | ·284 | B | ·24 | B | ·284 | ·167 | ·70 | ·605 | ·95 | ·036 | Nº11 | B | ·284 | B | ·237 | B | ·284 | ·248 | ·35 | ·38 | ·473 | ·25 | ·49 | ·065 | 4 B.A. |
| 2 B.A. | C | ·35 | C | ·29 | C | ·35 | ·225 | ·70 | ·605 | ·95 | ·036 | F | C | ·35 | C | ·29 | C | ·35 | ·324 | ·35 | ·43 | ·475 | ·30 | ·54 | ·065 | 2 B.A. |
| ¼" B.S.F. | E | ·394 | E | ·327 | E | ·394 | ·305 | 1·00 | ·776 | 1·315 | ·036 | P | E | ·402 | E | ·335 | E | ·402 | ·443 | ·50 | ·58 | ·66 | ·48 | ·72 | ·072 | ¼" B.S.F. |
| 5/16" B.S.F. | G | ·473 | G | ·39 | G | ·473 | ·360 | 1·10 | 1·02 | 1·42 | ·036 | W | G | ·473 | G | ·397 | G | ·473 | ·525 | ·55 | ·632 | ·71 | ·57 | ·82 | ·072 | 5/16" B.S.F. |
| 3/8" B.S.F. | | | J | ·45 | J | ·490 | ·420 | 1·20 | 1·115 | 1·562 | ·048 | 29/64 | J | ·549 | J | ·445 | J | ·549 | ·60 | ·55 | ·708 | ·71 | ·66 | ·91 | ·082 | 3/8" B.S.F. |
| 7/16" B.S.F. | | | | | | | | | | | | | L | ·629 | L | ·504 | L | ·629 | ·704 | ·625 | ·818 | ·825 | ·70 | 1·05 | ·082 | 7/16" B.S.F. |
| ½" B.S.F. | | | | | | | | | | | | | N | ·721 | N | ·565 | N | ·721 | ·818 | ·70 | ·928 | ·90 | ·84 | 1·19 | ·082 | ½" B.S.F. |

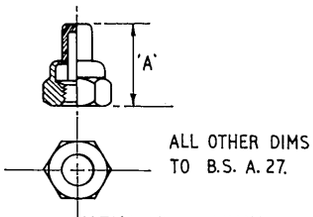


ALL OTHER DIMS TO B.S. A. 27.

HEXAGON CAPNUT

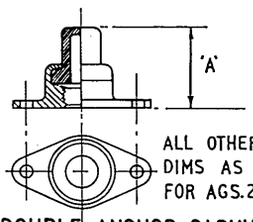


ALL OTHER DIMS AS FOR AGS.2007

DOUBLE ANCHOR CAPNUT

| SIZE OF THREAD | PART No. | DIM. A | | SIZE OF THREAD | PART No. | DIM. A | |
|---|---|---|---|---|---|---|---|
| 4 BA | AGS.2021/B/ | ·49 | | 4 BA | AGS.2023/B/ | ·49 | |
| 2 BA | AGS.2021/C/ | ·54 | | 2 BA | AGS.2023/C/ | ·54 | |
| 1/4" BSF. | AGS.2021/E/ | ·60 | | 1/4" BSF. | AGS.2023/E/ | ·60 | |
| 5/16" BSF. | AGS.2021/G/ | ·65 | | 5/16 BSF | AGS.2023/G/ | ·65 | |
| 3/8" BSF. | AGS.2021/J/ | ·755 | | 3/8" BSF. | AGS.2023/J/ | 755 | |
| 7/16" BSF. | AGS.2021/L/ | ·81 | | 7/16" BSF. | AGS.2023/L/ | ·81 | |
| 1/2" BSF. | AGS.2021/N/ | ·86 | | 1/2" BSF. | AGS.2023/N/ | ·86 | |

## METHOD OF CALLING UP

THE A.G.S. PART Nºs COVER ALL TYPES OF PROPRIETARY STIFFNUTS APPROVED TO R.A.E. SPECIFICATION AD.114 AND DIMENSIONS QUOTED COVER THE MAXIMUM DIMENSIONS TO ALLOW REPLACEMENT BY ANY MAKE OF NUT.
ALL ANCHOR NUTS ARE INTEGRAL PARTS eg. CAGE & NUT FIXED TOGETHER & MADE FROM SIMILAR MATERIAL. STEEL NUT - STEEL CAGE, LIGHT ALLOY NUT - LIGHT ALLOY CAGE.
FOR PLAIN OR ANCHOR NUTS ONE MATERIAL REFERENCE ONLY IS REQUIRED AS GIVEN IN TABLE BELOW.
IN THE CASE OF FLOATING ANCHOR OR STRIP NUTS, MILD STEEL ATTACHMENT PLATES OR STRIP ONLY IS TO BE CALLED UP IN WHICH CASE AN ADDITIONAL FIG.1 IS ADDED TO THE MATERIAL CODE.
MILD STEEL OR LIGHT ALLOY NUTS SHOULD ONLY BE USED UNLESS OTHER MATERIALS ARE SPECIALLY REQUIRED. N.B. LIGHT ALLOY IS SUITABLE FOR ANTI-MAGNETIC REQUIREMENTS.

| SUFFIX Nº | MATERIAL | SPEC. OF CAGE | SPEC. OF NUT | FINISH |
|---|---|---|---|---|
| 1 | MILD STEEL | S.3. OR S.84. | D.T.D. 650. | CADMIUM |
| 2 | NON-CORRODIBLE STEEL OR MONEL. | S.85 OR D.T.D.10. | S.80 | —— |
| 3 | LIGHT ALLOY | D.T.D. 182. | D.T.D.423 OR 364 | ANODIC |
| 4 | BRASS | B.S.409. | B.11, B.249, B.250 | ELECTRO-TIN |

EXAMPLE:

| BASIC A.G.S. Nº OF STIFFNUT | MARK Nº FOR SIZE | SUFFIX Nº FOR MAT'L OF STRIP OR ATTACHMENT PLATE | SUFFIX Nº FOR ONE PIECE NUT OR INTEGRAL NUT & CAGE | PITCH DIM'N & Nº OF PITCHES |
|---|---|---|---|---|
| STANDARD A.G.S. 2001. | E | | 1 OR 3 | |
| ANCHOR A.G.S. 2007. | E | | 1 OR 3 | |
| FLOATING ANCHOR A.G.S. 2012. | E | 1 | 1 OR 3 | |
| STRIP A.G.S. 2015. | E | 1 | 1 OR 3 | 2" PITCH / 25 |

NOTE: A.G.S. 2015/E/11/2" PITCH/25 WILL INCLUDE THE END ½ PITCH × 2 + DIM. 'S' × 2 MAKING TOTAL LENGTH OF 25 × 2" PITCHES = 52½"

## RESTRICTION IN THE USE OF STIFFNUTS

1. STIFFNUTS MUST NOT BE USED IN APPLICATIONS SUCH THAT THE LOOSENING OF ONE NUT, SUFFICIENT TO REMOVE ALL TENSION FROM THE BOLT, MIGHT CAUSE:- (a) STRUCTURAL COLLAPSE (b) LOSS OF CONTROL (c) FAILURE OF MOTIVE POWER (d) UNINTENSIONAL RELEASE OR INABILITY TO RELEASE ARMAMENT STORE i.e. GUNS, BOMBS. (e) UNINTENTIONAL OPERATION OR INABILITY TO OPERATE UNDERCARRIAGE OR FLAPS.
2. WHERE THERE IS ROTATION THAT WOULD TEND TO LOOSEN THE NUT.

| ISSUE Nº | DATE |
|---|---|
| 1 | JULY '56 |

DRAWN
L. SPENCER
TRACED
DOLTON DWG. Co.
24 · 8 · 1949
APPROVED

# A.G.S. STIFFNUTS

DRAWING OFFICE DATA SHEET Nº 1/6A

# THE DE HAVILLAND AIRCRAFT COMPANY LTD., HATFIELD, HERTS.

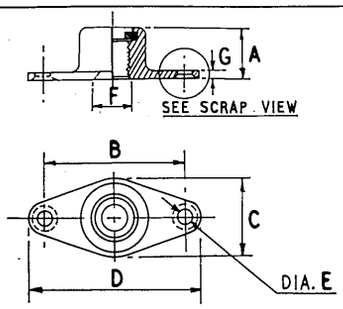


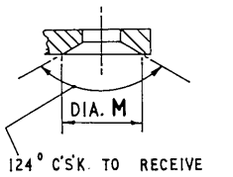


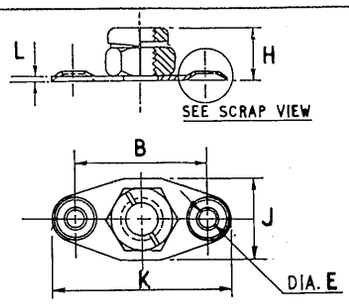


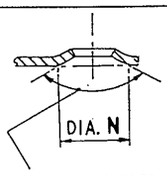


**STANDARD & C'S'K 'NYLOC' DOUBLE ANCHOR STIFFNUT**
(WITH C'S'K RIVET HOLES)
D.H.S. 828 & D.H.S. 848

| | SUFFIX No. | MATERIAL | SPEC. | FINISH |
|---|---|---|---|---|
| * | 1 | MILD STEEL | D.T.D. 650 | CADMIUM PLATED |
| * | 2 | STAINLESS STEEL | S. 80 | — |
| * | 3 | LIGHT ALLOY | D.T.D 423 OR D.T.D 364 | ANODISED BLUE |

**STANDARD 'AEROTIGHT' DOUBLE ANCHOR STIFFNUT**
(WITH DIMPLED RIVET HOLES)
D.H.S. 836

| THREAD SIZE | STANDARD 'NYLOC' | COUNTERSUNK 'NYLOC' | STANDARD 'AEROTIGHT' | A | B | C | D | DIA. E | DIA. F | G | H | J | K | L | DIA. M | DIA. N | THREAD SIZE |
|---|---|---|---|---|---|---|---|---|---|---|---|---|---|---|---|---|---|
| 2 BA | D.H.S. 828/C/* | D.H.S. 848/C/* | D.H.S. 836/C/* | ·315 | ·700 | ·375 | ·94 | ·096 | ·323 | ·06 | ·284 | ·415 | ·94 | ·028 | ·205 | ·20 | 2 BA |
| 1/4"BSF | D.H.S. 828/E/* | D.H.S. 848/E/* | D.H.S. 836/E/* | ·380 | 1·00 | ·50 | 1·22 | ·096 | ·442 | ·06 | ·348 | ·552 | 1·24 | ·036 | ·205 | ·20 | 1/4"BSF |
| 5/16"BSF | D.H.S. 828/G/* | D.H.S. 848/G/* | D.H.S. 836/G/* | ·403 | 1·10 | ·60 | 1·35 | ·128 | ·523 | ·06 | ·419 | ·632 | 1·35 | ·036 | ·264 | ·26 | 5/16"BSF |
| 3/8"BSF | D.H.S. 828/J/* | D.H.S. 848/J/* | D.H.S. 836/J/* | ·467 | 1·10 | ·625 | 1·419 | ·128 | ·598 | ·08 | ·495 | ·707 | 1·35 | ·036 | ·264 | ·26 | 3/8"BSF |

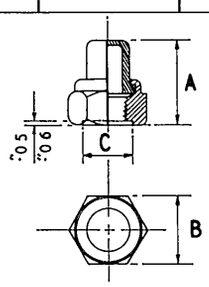


**CAP NUT WITH SPECIAL COUNTERBORE**
ALUM ALLOY-DTD 364 OR D.T.D. 423
FINISH - ANODIC BLACK

| THREAD SIZE | PART No. | A | B | C |
|---|---|---|---|---|
| 2 BA | D.H.S. 422/C | ·540 | ·324 | ·185 ·190 |
| 1/4"BSF | D.H.S. 422/E | ·60 | ·445 | ·250 ·255 |
| 5/16"BSF | D.H.S. 422/G | ·65 | ·525 | ·313 ·318 |
| 3/8"BSF | D.H.S. 422/J | ·755 | ·60 | ·375 ·380 |

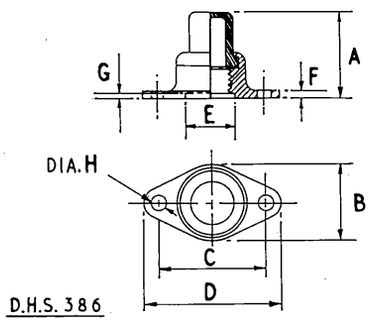


D.H.S. 386

**DOUBLE ANCHOR CAP NUT WITH SPECIAL COUNTERBORE & REDUCED RIVET HOLE CENTRES**
MILD STEEL- SI OR D.T.D. 650 FINISH-CADMIUM PLATED

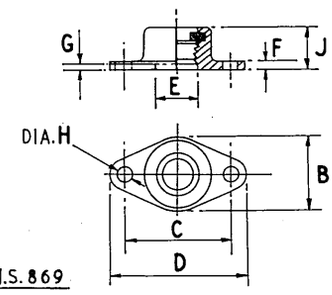


D.H.S. 869

**THIN DOUBLE ANCHOR STIFFNUT WITH SPECIAL COUNTERBORE & REDUCED RIVET HOLE CENTRES**
ALUM ALLOY- L 65 FINISH- BLACK ANODIC

| DOUBLE ANCHOR CAP NUT | THIN DOUBLE ANCHOR STIFFNUT | A | B | C | D | F | DIA. H | J | COUNTERBORE E | COUNTERBORE G | THREAD SIZE |
|---|---|---|---|---|---|---|---|---|---|---|---|
| D.H.S. 386/E | D.H.S. 869/E | ·585 ·600 | ·495 ·505 | ·75 | ·968 | ·055 ·065 | ·096 | ·275 ·285 | ·275 ·285 | ·05 ·06 | 1/4"BSF |
| D.H.S. 386/G | D.H.S. 869/G | ·635 ·650 | ·595 ·605 | ·85 | 1·068 | ·055 ·065 | ·096 | ·330 ·340 | ·335 ·345 | ·05 ·06 | 5/16"BSF |

NOTE * = S.W.G. (TO BE QUOTED AS ACTUAL)

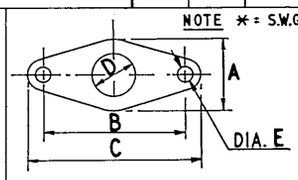


**PACKING PLATE FOR STANDARD DOUBLE ANCHOR STIFFNUT**
ALCLAD- L. 72 FINISH - ANODIC

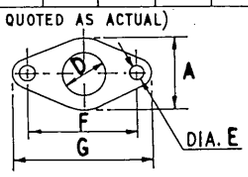


**PACKING PLATE FOR DHS 869 DOUBLE ANCHOR STIFFNUT**
ALCLAD - L. 72 FINISH-ANODIC

| FOR STANDARD STIFFNUT | FOR D.H.S. 869 STIFFNUT | A | B | C | DIA. D | DIA. E | F | G | FOR NUT SIZE |
|---|---|---|---|---|---|---|---|---|---|
| D.H.S. 877/B/* | — | ·375 | ·70 | ·94 | 5/32" | ·096 | | · | 4 BA. |
| D.H.S. 877/C/* | — | ·375 | ·70 | ·94 | 7/32" | ·096 | | | 2 BA. |
| D.H.S. 877/E/* | D.H.S. 847/E/* | ·50 | 1·0 | 1·22 | 5/16" | ·096 | ·75 | ·968 | 1/4"BSF |
| D.H.S. 877/G/* | — | ·60 | 1·1 | 1·35 | 3/8" | ·128 | | · | 5/16"BSF |

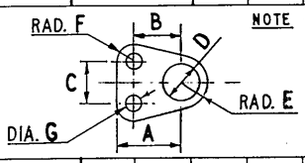


NOTE * = S.W.G. (TO BE QUOTED AS ACTUAL)

**PACKING PLATE FOR STANDARD SINGLE ANCHOR STIFFNUT**
ALCLAD - L.72 FINISH - ANODIC

| PART No. | A | B | C | DIA D | RAD E | RAD F | DIA G | | | FOR NUT SIZE |
|---|---|---|---|---|---|---|---|---|---|---|
| D.H.S. 878/B/* | ·47 | ·35 | ·25 | 5/32" | ·187 | ·12 | ·096 | | | 4 BA |
| D.H.S. 878/C/* | ·47 | ·35 | ·30 | 7/32" | ·187 | ·12 | ·096 | | | 2 BA |
| D.H.S. 878/E/* | ·62 | ·50 | ·48 | 5/16" | ·25 | ·12 | ·096 | | | 1/4"BSF |

NOTE: SEE D.H.S. 430 FOR ANCHOR NUT PLATE

| ISSUE No. | DATE |
|---|---|
| 1 | JULY '56 |

COMPILED
T. EVANS
TRACED
H. NEWBERRY
APPROVED
T. Young

DRAWING OFFICE DATA SHEET No 1/6 B

# D.H.S. STIFFNUTS AND PACKING PLATES

GROUND BAR PINS AS LISTED ON DATA SHEET Nº 1/7B ARE TO BE USED IN ALL CASES IN PLACE OF TAPER PINS.
TYPICAL EXAMPLES SHOWING THEIR USAGE ARE ILLUSTRATED BELOW.
IN THE CASE OF FIG. 1 THE LENGTH, AND PART Nº OF THE PIN ARE OBTAINABLE DIRECT FROM THE TABLES ON DATA SHEET Nº 1/7B AGAINST THE TUBE O/DIAMETER.
WITH DESIGNS OF THE TYPE SHOWN IN FIG. 2 IT IS NECESSARY TO ADD: TWICE THE RIVETTING ALLOWANCE "A" TO THE OVERALL DIM. "B", TO OBTAIN THE LENGTH OF THE PIN TO THE NEAREST ·05". THE PART Nº OF THE PIN IS THEN OBTAINED FROM THE TABLES AGAINST THE LENGTH OF THE PIN.
UNDER NO CIRCUMSTANCE MUST HOLES FOR THESE PINS BE COUNTERSUNK.

FIGURE 1.

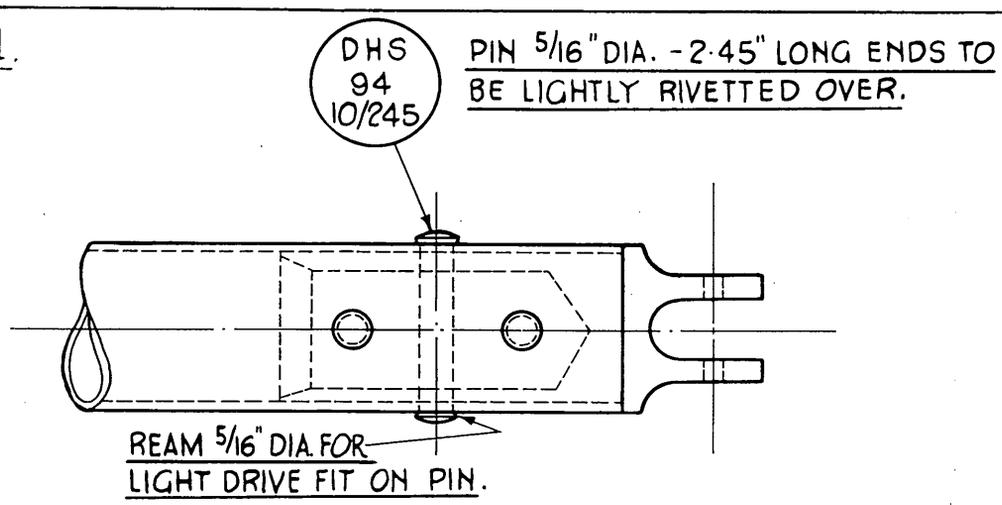


TYPICAL ASSEMBLY OF PINS THROUGH FRACTIONAL SIZED TUBES WITH INTERNAL SOCKETS.

FIGURE 2.

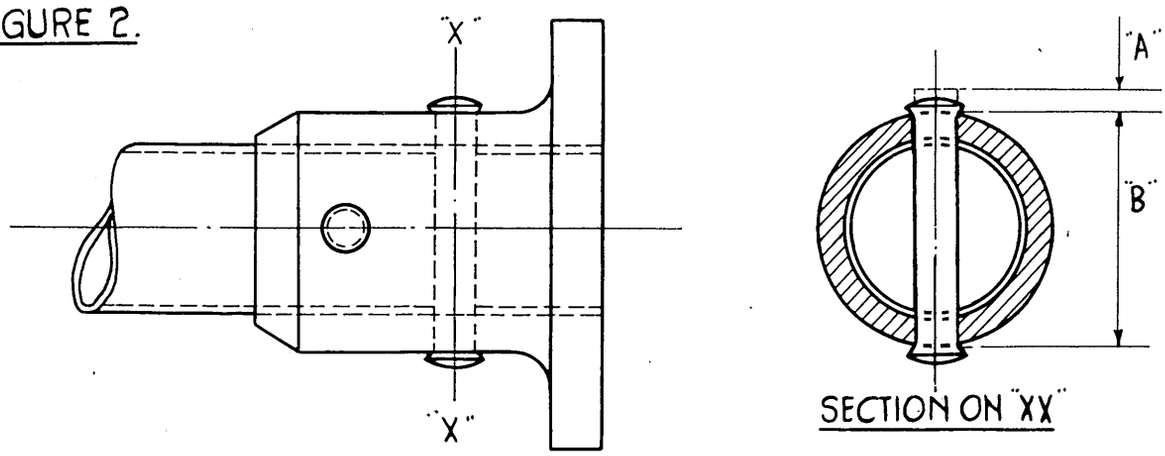


TYPICAL ASSEMBLY OF PINS THROUGH CIRCULAR, AND RECTANGULAR EXTERNAL SLEEVES. TO OBTAIN LENGTH OF PIN ADD:- "2 x THE LENGTH TO FORM HEAD" (DIM. A). TO OVERALL DIMENSION "B" TO NEAREST ·05".

RIVETTING ALLOWANCES.

| DIA. OF PIN | 5/32" | 3/16" | 1/4" | 5/16" | 3/8" |
|---|---|---|---|---|---|
| DIM. "A" | ·075" | ·075" | ·1" | ·1" | ·1" |

| ISSUE Nº | MOD. Nº |
|---|---|
| 1 | |
| | |
| | |
| | |
| | |
| | |

COMPILED BY. L. SPENCER.
TRACED BY. E.G.
APPROVED BY. [illegible]

GROUND STEEL PINS.

DRAWING OFFICE DATA SHEET Nº 1/7A

# D.H.S. 94

SHEET Nº 1 | Nº OF SHTS 1

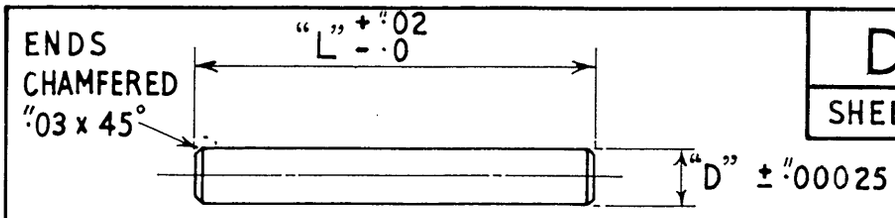


IDENTIFICATION:- ENDS TO BE COLOURED BRIGHT BLUE

| 3/32" DIA. | | | 1/8" DIA. | | | 5/32" DIA. | | | 3/16" DIA. | | | 1/4" DIA. | | | 5/16" DIA. | | | 3/8" DIA. | | |
|---|---|---|---|---|---|---|---|---|---|---|---|---|---|---|---|---|---|---|---|---|
| PART Nº "D" | "L" | SUIT TUBE O/DIA | PART Nº "D" | "L" | SUIT TUBE O/DIA | PART Nº "D" | "L" | SUIT TUBE O/DIA | PART Nº "D" | "L" | SUIT TUBE O/DIA | PART Nº "D" | "L" | SUIT TUBE O/DIA | PART Nº "D" | "L" | SUIT TUBE O/DIA | PART Nº "D" | "L" | SUIT TUBE O/DIA |
| 3 | 40 | 1/4" | | | | | | | | | | | | | | | | | | |
| 3 | 45 | | | | | | | | | | | | | | | | | | | |
| 3 | 50 | | | | | | | | | | | | | | | | | | | |
| 3 | 55 | 3/8" | 4 | 55 | 3/8" | | | | | | | | | | | | | | | |
| 3 | 60 | | 4 | 60 | | | | | | | | | | | | | | | | |
| 3 | 65 | 1/2" | 4 | 65 | 1/2" | 5 | 65 | 1/2" | | | | | | | | | | | | |
| 3 | 70 | | 4 | 70 | | 5 | 70 | | | | | | | | | | | | | |
| 3 | 75 | | 4 | 75 | | 5 | 75 | | | | | | | | | | | | | |
| 3 | 80 | 5/8" | 4 | 80 | 5/8" | 5 | 80 | 5/8" | | | | | | | | | | | | |
| 3 | 85 | | 4 | 85 | | 5 | 85 | | | | | | | | | | | | | |
| 3 | 90 | 3/4" | 4 | 90 | 3/4" | 5 | 90 | 3/4" | 6 | 90 | 3/4" | | | | | | | | | |
| | | | 4 | 95 | | 5 | 95 | | 6 | 95 | | 8 | 95 | 3/4" | | | | | | |
| | | | 4 | 100 | | 5 | 100 | | 6 | 100 | | 8 | 100 | | | | | | | |
| | | | 4 | 105 | 7/8" | 5 | 105 | 7/8" | 6 | 105 | 7/8" | 8 | 105 | | | | | | | |
| | | | 4 | 110 | | 5 | 110 | | 6 | 110 | | 8 | 110 | 7/8" | | | | | | |
| | | | 4 | 115 | 1" | 5 | 115 | 1" | 6 | 115 | 1" | 8 | 115 | | | | | | | |
| | | | | | | 5 | 120 | | 6 | 120 | | 8 | 120 | 1" | | | | | | |
| | | | | | | 5 | 125 | 1 1/8" | 6 | 125 | 1 1/8" | 8 | 125 | | | | | | | |
| | | | | | | 5 | 130 | | 6 | 130 | | 8 | 130 | | | | | | | |
| | | | | | | 5 | 135 | | 6 | 135 | | 8 | 135 | 1 1/8" | | | | | | |
| | | | | | | 5 | 140 | 1 1/4" | 6 | 140 | 1 1/4" | 8 | 140 | | | | | | | |
| | | | | | | | | | 6 | 145 | | 8 | 145 | 1 1/4" | | | | | | |
| | | | | | | | | | 6 | 150 | | 8 | 150 | | | | | | | |
| | | | | | | | | | 6 | 155 | 1 3/8" | 8 | 155 | | | | | | | |
| | | | | | | | | | 6 | 160 | | 8 | 160 | 1 3/8" | | | | | | |
| | | | | | | | | | 6 | 165 | 1 1/2" | 8 | 165 | | | | | | | |
| | | | | | | | | | | | | 8 | 170 | 1 1/2" | 10 | 170 | 1 1/2" | | | |
| | | | | | | | | | | | | 8 | 175 | | 10 | 175 | | | | |
| | | | | | | | | | | | | 8 | 180 | | 10 | 180 | | | | |
| | | | | | | | | | | | | 8 | 185 | 1 5/8" | 10 | 185 | 1 5/8" | | | |
| | | | | | | | | | | | | 8 | 190 | | 10 | 190 | | | | |
| | | | | | | | | | | | | 8 | 195 | 1 3/4" | 10 | 195 | 1 3/4" | | | |
| | | | | | | | | | | | | 8 | 200 | | 10 | 200 | | | | |
| | | | | | | | | | | | | 8 | 205 | | 10 | 205 | | | | |
| | | | | | | | | | | | | 8 | 210 | 1 7/8" | 10 | 210 | 1 7/8" | | | |
| | | | | | | | | | | | | 8 | 215 | | 10 | 215 | | | | |
| | | | | | | | | | | | | 8 | 220 | 2" | 10 | 220 | 2" | | | |
| | | | | | | | | | | | | 8 | 225 | | 10 | 225 | | | | |
| | | | | | | | | | | | | 8 | 230 | | 10 | 230 | | | | |
| | | | | | | | | | | | | 8 | 235 | 2 1/8" | 10 | 235 | 2 1/8" | | | |
| | | | | | | | | | | | | 8 | 240 | | 10 | 240 | | | | |
| | | | | | | | | | | | | 8 | 245 | 2 1/4" | 10 | 245 | 2 1/4" | 12 | 245 | 2 1/4" |
| | | | | | | | | | | | | 8 | 250 | | 10 | 250 | | 12 | 250 | |
| | | | | | | | | | | | | 8 | 255 | | 10 | 255 | | 12 | 255 | |
| | | | | | | | | | | | | 8 | 260 | 2 3/8" | 10 | 260 | 2 3/8" | 12 | 260 | 2 3/8" |
| | | | | | | | | | | | | 8 | 265 | | 10 | 265 | | 12 | 265 | |
| | | | | | | | | | | | | 8 | 270 | 2 1/2" | 10 | 270 | 2 1/2" | 12 | 270 | 2 1/2" |
| | | | | | | | | | | | | 8 | 275 | | 10 | 275 | | 12 | 275 | |
| | | | | | | | | | | | | 8 | 280 | | 10 | 280 | | 12 | 280 | |
| | | | | | | | | | | | | 8 | 285 | 2 5/8" | 10 | 285 | 2 5/8" | 12 | 285 | 2 5/8" |
| | | | | | | | | | | | | 8 | 290 | | 10 | 290 | | 12 | 290 | |
| | | | | | | | | | | | | 8 | 295 | 2 3/4" | 10 | 295 | 2 3/4" | 12 | 295 | 2 3/4" |
| | | | | | | | | | | | | 8 | 300 | | 10 | 300 | | 12 | 300 | |
| | | | | | | | | | | | | | | | 10 | 305 | | 12 | 305 | |
| | | | | | | | | | | | | | | | 10 | 310 | 2 7/8" | 12 | 310 | 2 7/8" |
| | | | | | | | | | | | | | | | 10 | 315 | | 12 | 315 | |
| | | | | | | | | | | | | | | | 10 | 320 | 3" | 12 | 320 | 3" |
| | | | | | | | | | | | | | | | 10 | 325 | | 12 | 325 | |
| | | | | | | | | | | | | | | | 10 | 330 | | 12 | 330 | |
| | | | | | | | | | | | | | | | 10 | 335 | 3 1/8" | 12 | 335 | 3 1/8" |
| | | | | | | | | | | | | | | | 10 | 340 | | 12 | 340 | |
| | | | | | | | | | | | | | | | 10 | 345 | 3 1/4" | 12 | 345 | 3 1/4" |
| | | | | | | | | | | | | | | | 10 | 350 | | 12 | 350 | |

FOR INSPECTION & WORKSHOP USE ONLY.
END NOT TO BE QUOTED ON DRAWING.
ENDS SPREAD +.03 APPROX. FOR 3/32", 1/8", 5/32" AND 3/16" DIA. PINS.
+.05 APPROX FOR 1/4", 5/16" AND 3/8" DIA. PINS.

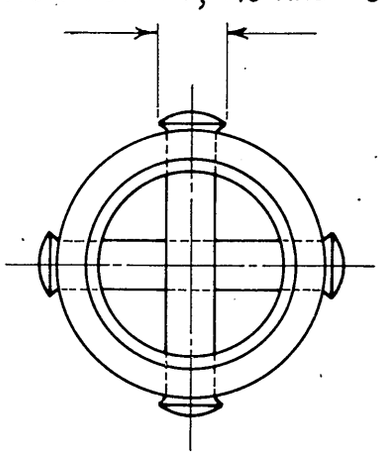

| ISSUE Nº | DATE |
|---|---|
| 10 | S.630. |
| 11 | S.649 |

GROUND STEEL PINS MAY BE CALLED UP FOR THE DIAMETERS LISTED ABOVE AND FOR ANY LENGTH UP TO THE MAXIMUM STATED FOR EACH DIA.

EXAMPLE:- A STEEL PIN 5/16" DIA. x 1".95 LONG WILL BE :-

| D.H.S. 94. | 10 | 195 |
|---|---|---|
| THE BASIC D.H.S. NUMBER | FIGURES "D" INDICATING THE NUMBER OF 1/32 NDS IN THE DIAMETER | FIGURES "L" INDICATING THE LENGTH IN 1/100 THS OF AN INCH |

COMPILED: L. SPENCER.

TRACED: DOLTON DRAWING Co. 26 . 10 . 1951

APPROVED

THE DE HAVILLAND AIRCRAFT COMPANY LIMITED, HATFIELD, HERTS

| FINISH | MATERIAL | SPEC. | DESCRIPTION | DRAWING OFFICE DATA SHEET Nº |
|---|---|---|---|---|
| OILED | H.T.S. GROUND BAR | S. 96 | GROUND STEEL PINS | 1/7B |

# THE DE HAVILLAND AIRCRAFT COMPANY LTD., HATFIELD, HERTS.

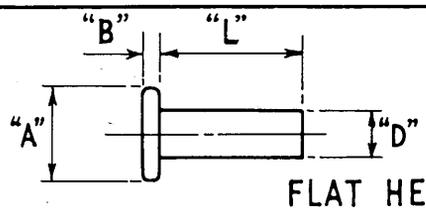


FLAT HEAD

| PART Nº | MATERIAL | SPEC: | TABLE REF. |
|---|---|---|---|
| A.S. 469 | COPPER | — | 4 |

| | | | | | | | | | | | |
|---|---|---|---|---|---|---|---|---|---|---|---|
| DIAMETER "D" | 1/16" | 3/32" | 1/8" | 5/32" | 3/16" | 7/32" | 1/4" | | | | |
| DEPTH "B" | ·016 | ·023 | ·031 | ·039 | ·047 | ·055 | ·063 | | | | |
| DIAMETER "A" | ·125 | ·188 | ·250 | ·313 | ·375 | ·438 | ·500 | | | | |

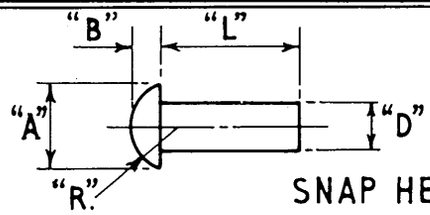


SNAP HEAD

| | | | |
|---|---|---|---|
| A.S. 155 | ALUMINIUM | L.36 | 1 |
| A.S. 455 | MILD STEEL | B.S. 1109 | 2 |
| A.S. 457 | MONEL METAL | D.T.D. 204 | 2 |
| A.S. 459 | COPPER | — | 4 |
| A.S. 2227 | ALUMINIUM ALLOY | L.57 | 2 |

| | | | | | | | | | | | |
|---|---|---|---|---|---|---|---|---|---|---|---|
| DIAMETER "D" | 1/16" | 3/32" | 1/8" | 5/32" | 3/16" | 7/32" | 1/4" | 9/32" | 5/16" | 11/32" | 3/8" |
| DEPTH "B" | ·04 | ·06 | ·08 | ·09 | ·11 | ·13 | ·15 | ·17 | ·19 | ·21 | ·23 |
| DIAMETER "A" | ·11 | ·16 | ·22 | ·27 | ·33 | ·38 | ·44 | ·49 | ·55 | ·60 | ·66 |
| APP. RAD. OF Hᴰ "R" | ·06 | ·09 | ·12 | ·15 | ·18 | ·21 | ·24 | ·26 | ·29 | ·32 | ·35 |

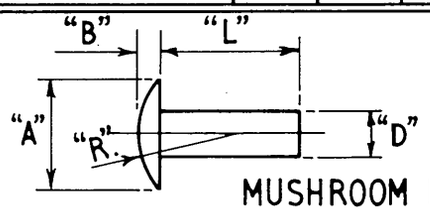


MUSHROOM HEAD

| | | | |
|---|---|---|---|
| A.S.2228 | ALUMINIUM ALLOY | L.57 | 3 |

GENERAL NOTE

SEE OVERLEAF FOR DIM "L"; PART Nᵒˢ AND METHOD OF CALLING UP.

| | | | | | | | | | | | |
|---|---|---|---|---|---|---|---|---|---|---|---|
| DIAMETER "D" | 1/16" | 3/32" | 1/8" | 5/32" | 3/16" | 7/32" | 1/4" | 5/16" | 3/8" | | |
| DEPTH "B" | ·025 | ·038 | ·050 | ·063 | ·075 | ·088 | ·100 | ·125 | ·150 | | |
| DIAMETER "A" | ·14 | ·21 | ·28 | ·35 | ·42 | ·49 | ·56 | ·70 | ·84 | | |
| APP. RAD. OF Hᴰ "R" | ·11 | ·17 | ·22 | ·27 | ·33 | ·39 | ·44 | ·55 | ·66 | | |

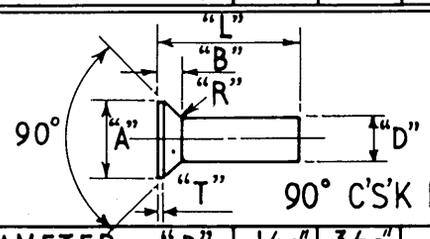


90° C'S'K HEAD

| | | | |
|---|---|---|---|
| A.S. 160 | ALUMINIUM | L.36 | 4 |
| A.S. 460 | MILD STEEL | B.S. 1109 | 2 |
| A.S. 462 | MONEL METAL | D.T.D. 204 | 3 |
| A.S. 467 | COPPER | — | 4 |
| A.S. 2229 | ALUMINIUM ALLOY | L.57 | 3 |

| | | | | | | | | | | | |
|---|---|---|---|---|---|---|---|---|---|---|---|
| DIAMETER "D" | 1/16" | 3/32" | 1/8" | 5/32" | 3/16" | 7/32" | 1/4" | 5/16" | 3/8" | | |
| DEPTH "B" | ·023 | ·035 | ·047 | ·059 | ·070 | ·082 | ·094 | ·117 | ·141 | | |
| DIAMETER "A" | ·11 | ·16 | ·22 | ·27 | ·33 | ·38 | ·44 | ·55 | ·66 | | |
| DEPTH "B" | ·029<br>·023 | ·041<br>·035 | ·053<br>·047 | ·065<br>·059 | ·077<br>·071 | ·091<br>·083 | ·103<br>·095 | ·128<br>·118 | ·156<br>·142 | THESE HEAD DIMENSIONS ARE APPLICABLE ONLY TO A.S.160; A.S.467 AND A.S.2229. | |
| DIAMETER "A" | ·115<br>·103 | ·170<br>·158 | ·225<br>·213 | ·279<br>·267 | ·334<br>·322 | ·387<br>·375 | ·444<br>·432 | ·555<br>·539 | ·666<br>·646 | | |
| MAX. RAD. "R" | ·02 | ·02 | ·02 | ·02 | ·04 | ·04 | ·04 | ·06 | ·06 | | |
| THICKNESS "T" | ·003 | ·003 | ·003 | ·004 | ·004 | ·006 | ·006 | ·006 | ·008 | | |

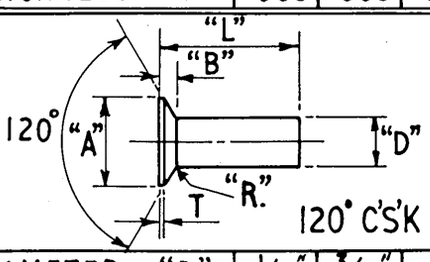


120° C'S'K HEAD

| | | | |
|---|---|---|---|
| A.S. 163 | ALUMINIUM | L.36 | 4 |
| A.S. 463 | MILD STEEL | B.S. 1109 | 3 |
| A.S. 465 | MONEL METAL | D.T.D. 204 | 3 |
| A.S.2230 | ALUMINIUM ALLOY | L.57 | 3 |

| | | | | | | | | | | | |
|---|---|---|---|---|---|---|---|---|---|---|---|
| DIAMETER "D" | 1/16" | 3/32" | 1/8" | 5/32" | 3/16" | 7/32" | 1/4" | 5/16" | 3/8" | | |
| DEPTH "B" | ·018 | ·027 | ·036 | ·045 | ·054 | ·063 | ·072 | ·090 | ·108 | | |
| DIAMETER "A" | ·125 | ·188 | ·250 | ·313 | ·375 | ·438 | ·500 | ·625 | ·750 | | |
| DEPTH "B" | ·027<br>·021 | ·036<br>·030 | ·045<br>·039 | ·056<br>·050 | ·064<br>·058 | ·078<br>·070 | ·088<br>·080 | ·107<br>·097 | ·130<br>·116 | THESE HEAD DIMENSIONS ARE APPLICABLE ONLY TO A.S.163 AND A.S.2230. | |
| DIAMETER "A" | ·131<br>·119 | ·193<br>·181 | ·256<br>·244 | ·318<br>·306 | ·381<br>·369 | ·443<br>·431 | ·506<br>·494 | ·633<br>·617 | ·760<br>·740 | | |
| MAX. RAD. "R" | ·02 | ·02 | ·02 | ·02 | ·04 | ·04 | ·04 | ·06 | ·06 | | |
| THICKNESS "T" | ·006 | ·006 | ·006 | ·008 | ·008 | ·012 | ·012 | ·012 | ·015 | | |

| ISSUE Nº | DATE |
|---|---|
| 4 | JAN. '53 |

COMPILED SPENCER

TRACED DOLTON DRAWING CO. 4·4·1952

APPROVED

# STANDARD SOLID RIVETS

DRAWING OFFICE DATA SHEET Nº 1/8

44.

# THE DE HAVILLAND AIRCRAFT COMPANY LTD., HATFIELD, HERTS

## SUFFIX CODES FOR LENGTH & DIAMETER

### TABLE 1

| DIA."D" | 1/16" | 3/32" | 1/8" | 5/32" | 3/16" | 7/32" | 1/4" | 9/32" | 5/16" | 11/32" | 3/8" |
|---|---|---|---|---|---|---|---|---|---|---|---|
| 'L' LENGTH | PART NUMBERS | | | | | | | | | | |
| 1/8" | 202 | | | | | | | | | | |
| 3/16" | 203 | 303 | 403 | | | | | | | | |
| 1/4" | 204 | 304 | 404 | 504 | 604 | | | | | | |
| 5/16" | 205 | 305 | 405 | 505 | 605 | 705 | 805 | | | | |
| 3/8" | 206 | 306 | 406 | 506 | 606 | 706 | 806 | 906 | 1006 | | |
| 7/16" | 207 | 307 | 407 | 507 | 607 | 707 | 807 | 907 | 1007 | 1107 | 1207 |
| 1/2" | 208 | 308 | 408 | 508 | 608 | 708 | 808 | 908 | 1008 | 1108 | 1208 |
| 9/16" | 209 | 309 | 409 | 509 | 609 | 709 | 809 | 909 | 1009 | 1119 | 1209 |
| 5/8" | 210 | 310 | 410 | 510 | 610 | 710 | 810 | 910 | 1010 | 1110 | 1210 |
| 11/16" | 211 | 311 | 411 | 511 | 611 | 711 | 811 | 911 | 1011 | 1111 | 1211 |
| 3/4" | 212 | 312 | 412 | 512 | 612 | 712 | 812 | 912 | 1012 | 1112 | 1212 |
| 13/16" | 213 | 313 | 413 | 513 | 613 | 713 | 813 | 913 | 1013 | 1113 | 1213 |
| 7/8" | 214 | 314 | 414 | 514 | 614 | 714 | 814 | 914 | 1011 | 1114 | 1214 |
| 15/16" | 215 | 315 | 415 | 515 | 615 | 715 | 815 | 915 | 1015 | 1115 | 1215 |
| 1" | 216 | 316 | 416 | 516 | 616 | 716 | 816 | 916 | 1016 | 1116 | 1216 |
| 1 1/8" | | 318 | 418 | 518 | 618 | 718 | 818 | 918 | 1018 | 1118 | 1218 |
| 1 1/4" | | 320 | 420 | 520 | 620 | 720 | 820 | 920 | 1020 | 1120 | 1220 |
| 1 3/8" | | 322 | 422 | 522 | 622 | 722 | 822 | 922 | 1022 | 1122 | 1222 |
| 1 1/2" | | 324 | 424 | 524 | 624 | 724 | 824 | 924 | 1024 | 1124 | 1224 |
| 1 3/4" | | | 428 | | | 728 | 828 | 928 | 1028 | 1128 | 1228 |
| 2" | | | | | | | 832 | 932 | 1032 | 1132 | 1232 |

### TABLE 2

| DIA."D" | 1/16" | 3/32" | 1/8" | 5/32" | 3/16" | 7/32" | 1/4" | 5/16" | 3/8" |
|---|---|---|---|---|---|---|---|---|---|
| 'L' LENGTH | PART NUMBERS | | | | | | | | |
| 1/8" | 202 | | | | | FOR A.S. 2227 ONLY | | | |
| 3/16" | 203 | 303 | 403 | | | | | | |
| 1/4" | 204 | 304 | 404 | 504 | | | | | |
| 5/16" | 205 | 305 | 405 | 505 | 605 | 705 | | | |
| 3/8" | 206 | 306 | 406 | 506 | 606 | 706 | 806 | | |
| 7/16" | 207 | 307 | 407 | 507 | 607 | 707 | 807 | | |
| 1/2" | 208 | 308 | 408 | 508 | 608 | 708 | 808 | 1008 | |
| 9/16" | 209 | 309 | 409 | 509 | 609 | 709 | 809 | 1009 | 1209 |
| 5/8" | 210 | 310 | 410 | 510 | 610 | 710 | 810 | 1010 | 1210 |
| 11/16" | 211 | 311 | 411 | 511 | 611 | 711 | 811 | 1011 | 1211 |
| 3/4" | 212 | 312 | 412 | 512 | 612 | 712 | 812 | 1012 | 1212 |
| 13/16" | 213 | 313 | 413 | 513 | 613 | 713 | 813 | 1013 | 1213 |
| 7/8" | 214 | 314 | 414 | 514 | 614 | 714 | 814 | 1014 | 1214 |
| 15/16" | 215 | 315 | 415 | 515 | 615 | 715 | 815 | 1015 | 1215 |
| 1" | 216 | 316 | 416 | 516 | 616 | 716 | 816 | 1016 | 1216 |
| 1 1/8" | | 318 | 418 | 518 | 618 | 718 | 518 | 1018 | 1218 |
| 1 1/4" | | 320 | 420 | 520 | 620 | 720 | 820 | 1020 | 1220 |
| 1 3/8" | | 322 | 422 | 522 | 622 | 722 | 822 | 1022 | 1222 |
| 1 1/2" | | 324 | 424 | 524 | 624 | 724 | 824 | 1024 | 1224 |
| 1 3/4" | | | | | | 728 | 828 | 1028 | 1228 |
| 2" | | | | | | | 832 | 1032 | 1232 |

### TABLE 3

| DIA."D" | 1/16" | 3/32" | 1/8" | 5/32" | 3/16" | 7/32" | 1/4" | 5/16" | 3/8" |
|---|---|---|---|---|---|---|---|---|---|
| 'L' LENGTH | PART NUMBERS | | | | | | | | |
| 1/8" | 202 | | | | | | | | |
| 3/16" | 203 | 303 | | | | | | | |
| 1/4" | 204 | 304 | 404 | | | | | | |
| 5/16" | 205 | 305 | 405 | 505 | | | | | |
| 3/8" | 206 | 306 | 406 | 506 | 606 | | | | |
| 7/16" | 207 | 307 | 407 | 507 | 607 | 707 | | | |
| 1/2" | 208 | 308 | 408 | 508 | 608 | 708 | 808 | | |
| 9/16" | 209 | 309 | 409 | 509 | 609 | 709 | 809 | | |
| 5/8" | 210 | 310 | 410 | 510 | 610 | 710 | 810 | 1010 | |
| 11/16" | 211 | 311 | 411 | 511 | 611 | 711 | 811 | 1011 | |
| 3/4" | 212 | 312 | 412 | 512 | 612 | 712 | 812 | 1012 | 1212 |
| 13/16" | 213 | 313 | 413 | 513 | 613 | 713 | 813 | 1013 | 1213 |
| 7/8" | 214 | 314 | 414 | 514 | 614 | 714 | 814 | 1014 | 1214 |
| 15/16" | 215 | 315 | 415 | 515 | 615 | 715 | 815 | 1015 | 1215 |
| 1" | 216 | 316 | 416 | 516 | 616 | 716 | 816 | 1016 | 1216 |
| 1 1/8" | | 318 | 418 | 518 | 618 | 718 | 818 | 1018 | 1218 |
| 1 1/4" | | 320 | 420 | 520 | 620 | 720 | 820 | 1020 | 1220 |
| 1 3/8" | | 322 | 422 | 522 | 622 | 722 | 822 | 1022 | 1222 |
| 1 1/2" | | 324 | 424 | 524 | 624 | 724 | 824 | 1024 | 1224 |
| 1 3/4" | FOR A.S. 462, 2228. | | | | | 728 | 828 | 1028 | 1228 |
| 2" | 2229 & 2230 ONLY. | | | | | | 832 | 1032 | 1232 |

### TABLE 4

| DIA."D" | 1/16" | 3/32" | 1/8" | 5/32" | 3/16" | 7/32" | 1/4" | 5/16" | 3/8" |
|---|---|---|---|---|---|---|---|---|---|
| 'L' LENGTH | PART NUMBERS | | | | | | | | |
| 1/8" | 202 | | | | | NUMBERS OUTSIDE HEAVY LINE ARE FOR A.S.459 & A.S.469 ONLY | | | |
| 3/16" | 203 | 303 | 403 | | | | | | |
| 1/4" | 204 | 304 | 404 | 504 | | | | | |
| 5/16" | 205 | 305 | 405 | 505 | 605 | | | | |
| 3/8" | 206 | 306 | 406 | 506 | 606 | 706 | 806 | | |
| 7/16" | 207 | 307 | 407 | 507 | 607 | 707 | 807 | | |
| 1/2" | 208 | 308 | 408 | 508 | 608 | 708 | 808 | | |
| 9/16" | 209 | 309 | 409 | 509 | 609 | 709 | 809 | | |
| 5/8" | 210 | 310 | 410 | 510 | 610 | 710 | 810 | | |
| 11/16" | 211 | 311 | 411 | 511 | 611 | 711 | 811 | | |
| 3/4" | 212 | 312 | 412 | 512 | 612 | 712 | 812 | | |
| 13/16" | 213 | 313 | 413 | 513 | 613 | 713 | 813 | | |
| 7/8" | 214 | 314 | 414 | 514 | 614 | 714 | 814 | | |
| 15/16" | 215 | 315 | 415 | 515 | 615 | 715 | 815 | | |
| 1" | 216 | 316 | 416 | 516 | 616 | 716 | 816 | | |
| 1 1/8" | | 318 | 418 | 518 | 618 | 718 | 818 | | |
| 1 1/4" | | 320 | 420 | 520 | 620 | 720 | 820 | | |
| 1 3/8" | | 322 | 422 | 522 | 622 | 722 | 822 | | |
| 1 1/2" | | 324 | 424 | 524 | 624 | 724 | 824 | | |
| 1 3/4" | | | | | | 728 | 828 | | |
| 2 | | | | | | | 832 | | |

44A.

**METHOD OF CALLING UP.**

THE LAST 2 FIGURES OF THE PART Nº DENOTE THE LENGTH OF THE RIVET IN 1/16
THE REMAINING FIGURE OR FIGURES DENOTE THE DIAMETER IN 1/32"

A.S. 2227 610 — INDICATES SNAP HEAD RIVET ALUMINIUM ALLOY L.57. 3/16" DIA. x 5/8" LONG (i.e. 6/32" x 10/16")

FOR STRENGTH VALUES SEE DATA SHT Nº 111/41.
FOR CUT & DIMPLED COUNTERSINKS (L.A. RIVETS) SEE 1/40
COUNTERSINKS FOR MILLED FINISH SEE D.H.S. 526.

LENGTH PROUD OF PLATE REQUIRED TO FORM HEAD.

| DIAMETER | 1/16" | 3/32" | 1/8" | 5/32" | 3/16" | 7/32" | 1/4" | 5/16" | 3/8" |
|---|---|---|---|---|---|---|---|---|---|
| ROUND HEAD | ·09 | ·12 | ·16 | ·19 | ·23 | ·27 | ·31 | ·39 | ·47 |
| C'S'K HEAD | ·03 | ·05 | ·06 | ·08 | ·09 | ·11 | ·13 | ·16 | ·19 |

| ISSUE Nº | DATE |
|---|---|
| 4 | JAN. '53 |

COMPILED

TRACED — DOLTON DRAWING Co. 2 · 4 · 195[illegible]

APPROVED

# RIVETS - PART NUMBER CODES

# THE DE HAVILLAND AIRCRAFT COMPANY LTD., HATFIELD, HERTS.

## SNAP HEAD

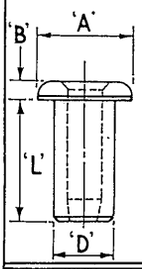


| PART Nº | MATERIAL | SPECIFICATION |
|---|---|---|
| | | |
| A.G.S. 2045 | ALUMINIUM ALLOY | L.69 |
| A.G.S. 2040 | MILD STEEL | D.T.D. 720 |

| | | | | | | | |
|---|---|---|---|---|---|---|---|
| DIA. 'D' | 3/32" | 1/8" | 5/32" | 3/16" | 1/4" | 5/16" | 3/8" |
| DIA. 'A' | ·156 | ·210 | ·250 | ·344 | ·406 | ·531 | ·625 |
| DEPTH 'B' | ·031 | ·039 | ·052 | ·065 | ·078 | ·091 | ·104 |
| DRILL SIZE | Nº 40 | Nº 30 | Nº 20 | Nº 11 | 1/4" | LETTER 'O' | LETTER 'V' |

## COUNTERSUNK HEAD

·005 FOR 1/8" TO 3/16"
·010 FOR 1/4" TO 3/8"

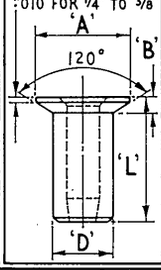


| PART Nº | MATERIAL | SPECIFICATION |
|---|---|---|
| INFORMATION REGARDING 3/32" DIA. 100° C'S'K ALUM. ALLOY RIVET AVAILABLE ON STANDARDS SECT | | |
| A.G.S. 2046 | ALUMINIUM ALLOY | L.69 |
| A.G.S. 2041 | MILD STEEL | D.T.D. 720 |

| | | | | | | | |
|---|---|---|---|---|---|---|---|
| DIA. 'D' | — | 1/8" | 5/32" | 3/16" | 1/4" | 5/16" | 3/8" |
| DIA. 'A' | — | ·210 | ·250 | ·344 | ·406 | ·531 | ·620 |
| DEPTH 'B' | — | ·030 | ·032 | ·050 | ·051 | ·068 | ·081 |
| DRILL SIZE | — | Nº 30 | Nº 20 | Nº 11 | 1/4" | LETTER 'O' | LETTER 'V' |

| LENGTH 'L' | THICKNESS TO BE RIVETED | 3/32" SNAP | 3/32" PIN | | | 1/8" SNAP | 1/8" PIN | 1/8" C'S'K | 1/8" PIN | 5/32" SNAP | 5/32" PIN | 5/32" C'S'K | 5/32" PIN | 3/16" SNAP | 3/16" PIN | 3/16" C'S'K | 3/16" PIN |
|---|---|---|---|---|---|---|---|---|---|---|---|---|---|---|---|---|---|
| 1/8" | UP TO ·064 | 304 | 304 | | | 404 | 404 | 404 | 404 | 504 | 504 | 504 | 504 | | | | |
| 5/32" | | | | | | | | | | | | | | 605 | 605 | 605 | 605 |
| 3/16" | ·064 TO ·125 | 306 | 306 | | | 406 | 406 | 406 | 404 | 506 | 506 | 506 | 504 | | | | |
| 7/32" | | | | | | | | | | | | | | 607 | 607 | 607 | 605 |
| 1/4" | ·125 TO ·188 | 308 | 308 | | | 408 | 408 | 408 | 406 | 508 | 508 | 508 | 506 | | | | |
| 9/32" | | | | | | | | | | | | | | 609 | 609 | 609 | 607 |
| 5/16" | ·188 TO ·25 | 310 | 310 | | | 410 | 410 | 410 | 408 | 510 | 510 | 510 | 508 | | | | |
| 11/32" | | | | | | | | | | | | | | 611 | 611 | 611 | 609 |
| 3/8" | ·25 TO ·312 | | | | | | | | | 512 | 512 | 512 | 510 | | | | |
| 13/32" | | | | | | | | | | | | | | 613 | 613 | 613 | 611 |
| 7/16" | ·312 TO ·375 | | | | | | | | | 514 | 514 | 514 | 512 | | | | |
| 15/32" | | | | | | | | | | | | | | 615 | 615 | 615 | 613 |
| 17/32" | ·375 TO ·437 | | | | | | | | | | | | | 617 | 617 | 617 | 615 |
| 19/32" | ·437 TO ·50 | | | | | | | | | | | | | 619 | 619 | 619 | 617 |

| LENGTH 'L' | THICKNESS TO BE RIVETED | 1/4" SNAP | 1/4" PIN | 1/4" C'S'K | 1/4" PIN | 5/16" SNAP | 5/16" PIN | 5/16" C'S'K | 5/16" PIN | 3/8" SNAP | 3/8" PIN | 3/8" C'S'K | 3/8" PIN |
|---|---|---|---|---|---|---|---|---|---|---|---|---|---|
| 7/32" | ·064 TO ·125 | 807 | 807 | 807 | 807 | | | | | | | | |
| 9/32" | ·125 TO ·188 | 809 | 809 | 809 | 807 | 1009 | 1009 | 1009 | 1009 | | | | |
| 11/32" | ·188 TO ·25 | 811 | 811 | 811 | 809 | 1011 | 1011 | 1011 | 1009 | 1211 | 1211 | 1211 | 1211 |
| 13/32" | ·25 TO ·312 | 813 | 813 | 813 | 811 | 1013 | 1013 | 1013 | 1011 | 1213 | 1213 | 1213 | 1211 |
| 15/32" | ·312 TO ·375 | 815 | 815 | 815 | 813 | 1015 | 1015 | 1015 | 1013 | 1215 | 1215 | 1215 | 1213 |
| 17/32" | ·375 TO ·437 | 817 | 817 | 817 | 815 | 1017 | 1017 | 1017 | 1015 | 1217 | 1217 | 1217 | 1215 |
| 19/32" | ·437 TO ·50 | 819 | 819 | 819 | 817 | 1019 | 1019 | 1019 | 1017 | 1219 | 1219 | 1219 | 1217 |
| 21/32" | ·50 TO ·562 | 821 | 821 | 821 | 819 | 1021 | 1021 | 1021 | 1019 | 1221 | 1221 | 1221 | 1219 |
| 23/32" | ·562 TO ·625 | 823 | 823 | 823 | 821 | 1023 | 1023 | 1023 | 1021 | 1223 | 1223 | 1223 | 1221 |
| 25/32" | ·625 TO ·687 | 825 | 825 | 825 | 823 | 1025 | 1025 | 1025 | 1023 | 1225 | 1225 | 1225 | 1223 |
| 27/32" | ·687 TO ·75 | | | | | 1027 | 1027 | 1027 | 1025 | 1227 | 1227 | 1227 | 1225 |
| 29/32" | ·75 TO ·812 | | | | | 1029 | 1029 | 1029 | 1027 | 1229 | 1229 | 1229 | 1227 |
| 31/32" | ·812 TO ·875 | | | | | | | | | 1231 | 1231 | 1231 | 1229 |
| 33/32" | ·875 TO ·937 | | | | | | | | | 1233 | 1233 | 1233 | 1231 |
| 35/32" | ·937 TO 1·0 | | | | | | | | | 1235 | 1235 | 1235 | 1233 |

## MANDREL

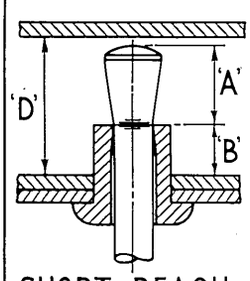


WHEN RIVETING INTO TUBE TRAILING EDGE SECTIONS ETC. THE MINIMUM DISTANCE BETWEEN OPPOSITE SURFACES 'D' WHICH WILL ALLOW THE RIVET TO BE CORRECTLY INSERTED IS:- 'A' + 'B' MAX.

| RIVET DIA | 'A' | 'B' MAX. | RIVET DIA | 'A' | 'B' MAX. |
|---|---|---|---|---|---|
| 3/32" DIA | ·15 | ·125 | 1/4" DIA | ·24 | ·156 |
| 1/8" DIA | ·20 | ·125 | 5/16" DIA | ·26 | ·156 |
| 5/32" DIA. | ·22 | ·125 | 3/8" DIA. | ·28 | ·156 |
| 3/16" DIA | ·23 | ·156 | | | |

## SHORT REACH MANDREL

THE DIM. 'D' WHEN USING A SHORT REACH MANDREL IS :-
('A' = ·1) + ('B' MAX. = ·125) FOR 1/8" RIVETS
('A' = ·11) + ('B' MAX. = ·156) FOR 5/32" & 3/16" RIVETS
} DRAWINGS WILL CALL UP :- "USE SHORT REACH MANDREL"

DUE TO THE EXCESSIVE WEAR EXPERIENCED WITH THIS TYPE MANDREL IT MUST ONLY BE USED WHERE STANDARD TYPE IS UNSUITABLE.

## NOTES

1. RIVETS MAY BE USED WITH OR WITHOUT SEALING PINS AS REQUIRED. THE PIN MUST BE OF SIMILAR MATERIAL TO THE RIVET.
2. ON EXTERNAL SURFACES THE RIVET MUST BE FILLED WITH EITHER THE CORRECT SEALING PIN OR A NON-METALLIC FILLER SUCH AS I.C.I. GREY PUTTY (I.C.I. REF. Nº 147/524)
3. FOR STRENGTH VALUES SEE DATA SHEET Nº III/42
4. INFORMATION REGARDING DURAL L.37 RIVETS IS GIVEN IN THE A.G.S. AND THEIR USE IS NOT PERMITTED UNLESS SPECIAL AUTHORITY HAS BEEN OBTAINED.

## METHOD OF CALLING UP

THE LAST TWO FIGURES OF THE CODE Nº DENOTE THE LENGTH IN 1/32", THE REMAINING FIGURE OR FIGURES DENOTES THE DIAMETER IN 1/32"

E.G. A COUNTERSUNK HEAD CHOBERT RIVET DIA. 3/16" x 9/32" LONG IN L.69 IS A.G.S. 2046/609
A SEALING PIN FOR THE ABOVE RIVET IN D.T.D. 423 IS A.G.S. 2047/607

## SEALING PINS

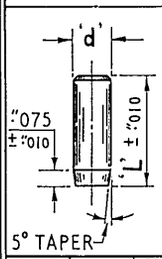


| PART Nº | MATERIAL | SPEC. |
|---|---|---|
| A.G.S. 2047 | ALUMINIUM ALLOY | D.T.D. 423 |
| A.G.S. 2042 | MILD STEEL | D.T.D. 720 |

| NOM. SHANK DIA. OF RIVET | DIA. OF PIN 'd' | LENGTH OF PIN 'L' | CODE Nº |
|---|---|---|---|
| 3/32" | ·073 +·0005 −·0 | ·22 | 304 |
| | | ·28 | 306 |
| | | ·34 | 308 |
| | | ·41 | 310 |
| 1/8" | ·088 +·0 −·0005 | ·22 | 404 |
| | | ·28 | 406 |
| | | ·34 | 408 |
| | | ·41 | 410 |
| 5/32" | ·107 +·0 −·0005 | ·24 | 504 |
| | | ·30 | 506 |
| | | ·36 | 508 |
| | | ·43 | 510 |
| | ·106 +·0005 −·0 | ·49 | 512 |
| | | ·55 | 514 |
| 3/16" | ·132 +·0 −·0005 | ·28 | 605 |
| | | ·34 | 607 |
| | | ·41 | 609 |
| | ·131 +·0005 −·0 | ·47 | 611 |
| | | ·53 | 613 |
| | | ·59 | 615 |
| | | ·66 | 617 |
| | | ·72 | 619 |
| 1/4" | ·184 +·0 −·001 | ·34 | 807 |
| | | ·41 | 809 |
| | | ·47 | 811 |
| | | ·53 | 813 |
| | | ·59 | 815 |
| | | ·66 | 817 |

| NOM. SHANK DIA. OF RIVET | DIA. OF PIN 'd' | LENGTH OF PIN 'L' | CODE Nº |
|---|---|---|---|
| 1/4" | ·184 +·0 −·001 | ·72 | 819 |
| | | ·78 | 821 |
| | | ·84 | 823 |
| | | ·91 | 825 |
| 5/16" | ·210 +·0 −·001 | ·42 | 1009 |
| | | ·48 | 1011 |
| | | ·54 | 1013 |
| | | ·60 | 1015 |
| | | ·67 | 1017 |
| | | ·73 | 1019 |
| | | ·79 | 1021 |
| | | ·85 | 1023 |
| | | ·92 | 1025 |
| | | ·98 | 1027 |
| | | 1·04 | 1029 |
| 3/8" | ·250 +·0 −·001 | ·50 | 1211 |
| | | ·56 | 1213 |
| | | ·62 | 1215 |
| | | ·68 | 1217 |
| | | ·75 | 1219 |
| | | ·81 | 1221 |
| | | ·87 | 1223 |
| | | ·93 | 1225 |
| | | 1·0 | 1227 |
| | | 1·06 | 1229 |
| | | 1·12 | 1231 |
| | | 1·18 | 1233 |
| | | 1·25 | 1235 |

| ISSUE Nº | DATE |
|---|---|
| 1 | JULY '56 |

DRAWN: L. SPENCER

TRACED: DOLTON DRWG Co. 19 - 2 - 1955

APPROVED: [signature]

# "CHOBERT" RIVETS

DRAWING OFFICE DATA SHEET Nº 1/10A

# THE DE HAVILLAND AIRCRAFT COMPANY LTD, HATFIELD, HERTS.

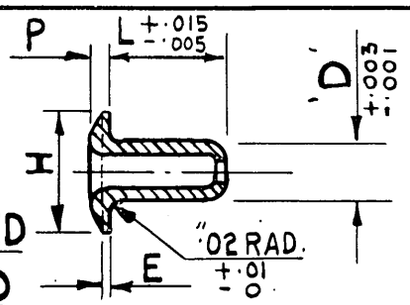


**DOMED HEAD**

| PART Nº | MATERIAL | SPECN | FINISH |
|---|---|---|---|
| A.G.S. 2050 | MONEL | D.T.D. 10 | CADMIUM |

| | | | | | |
|---|---|---|---|---|---|
| SHANK DIA. D | | 7/64" | 1/8" | 5/32" | 3/16" |
| DIA. OF HEAD H | | ·192 | ·236 | ·263 | ·320 |
| DEPTH OF HEAD P | | ·020 | ·025 | ·028 | ·040 |
| EDGE E | | ·008 | ·010 | ·010 | ·015 |
| DRILL SIZE | | Nº 33 | Nº 30 | Nº 20 | Nº 11 |

| LENGTH L | THICKNESS TO BE RIVETED | | CODE NUMBERS | | | | | LENGTH L | THICKNESS TO BE RIVETED | | CODE NUMBERS | | | | |
|---|---|---|---|---|---|---|---|---|---|---|---|---|---|---|---|
| | BREAK HEAD | BREAK STEM | | 7/64" | 1/8" | 5/32" | 3/16" | | BREAK HEAD | BREAK STEM | | 7/64" | 1/8" | 5/32" | 3/16" |
| ·13 | ·05 | – | | | 413 | | | ·35 | ·25 | ·23 | | | 435 | | |
| ·19 | ·09 | ·07 | | 319 | | | | ·36 | ·23 | ·20 | | | | | 636 |
| ·19 | ·09 | ·07 | | | 419 | | | ·37 | ·25 | ·23 | | | | 537 | |
| ·19 | ·08 | ·05 | | | | 519 | | ·39 | ·25 | ·23 | | | | | 639 |
| ·21 | ·11 | ·09 | | 321 | | | | ·40 | ·30 | ·28 | | | 440 | | |
| ·24 | ·14 | ·12 | | | 424 | | | ·40 | ·29 | ·26 | | | | 540 | |
| ·24 | ·14 | ·10 | | | | 524 | | ·45 | ·34 | ·31 | | | | 545 | |
| ·24 | ·12 | ·09 | | | | | 624 | ·50 | ·36 | ·34 | | | | | 650 |
| ·29 | ·19 | ·17 | | | 429 | | | ·65 | ·51 | ·49 | | | | | 665 |
| ·30 | ·20 | ·16 | | | | 530 | | ·75 | ·61 | ·59 | | | | | 675 |
| ·30 | ·17 | ·15 | | | | | 630 | | | | | | | | |

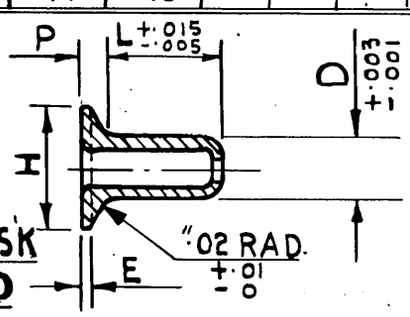


**120° CSK HEAD**

| PART Nº | MATERIAL | SPECN | FINISH |
|---|---|---|---|
| A.G.S. 2051 | MONEL | D.T.D. 10 | CADMIUM |

| | | | | | |
|---|---|---|---|---|---|
| SHANK DIA. D | | 7/64" | 1/8" | 5/32" | 3/16" |
| DIA. OF HEAD H | | ·192 | ·236 | ·263 | ·320 |
| DEPTH OF HEAD P | | ·028 | ·036 | ·039 | ·045 |
| EDGE E | | ·006 | ·008 | ·008 | ·010 |
| DRILL SIZE | | Nº 33 | Nº 30 | Nº 20 | Nº 11 |

| LENGTH L | THICKNESS TO BE RIVETED | | CODE NUMBERS | | | | | LENGTH L | THICKNESS TO BE RIVETED | | CODE NUMBERS | | | | |
|---|---|---|---|---|---|---|---|---|---|---|---|---|---|---|---|
| | BREAK HEAD | BREAK STEM | | 7/64" | 1/8" | 5/32" | 3/16" | | BREAK HEAD | BREAK STEM | | 7/64" | 1/8" | 5/32" | 3/16" |
| ·13 | ·08 | – | | | 413 | | | ·35 | ·28 | ·26 | | | 435 | | |
| ·19 | ·11 | ·09 | | 319 | | | | ·36 | ·26 | ·23 | | | | | 636 |
| ·19 | ·12 | ·10 | | | 419 | | | ·37 | ·28 | ·26 | | | | 537 | |
| ·19 | ·11 | ·08 | | | | 519 | | ·39 | ·28 | ·26 | | | | | 639 |
| ·21 | ·13 | ·11 | | 321 | | | | ·40 | ·33 | ·31 | | | 440 | | |
| ·24 | ·17 | ·15 | | | 424 | | | ·40 | ·32 | ·29 | | | | 540 | |
| ·24 | ·17 | ·13 | | | | 524 | | ·45 | ·37 | ·34 | | | | 545 | |
| ·24 | ·15 | ·12 | | | | | 624 | ·50 | ·39 | ·37 | | | | | 650 |
| ·29 | ·22 | ·20 | | | 429 | | | ·65 | ·54 | ·52 | | | | | 665 |
| ·30 | ·23 | ·19 | | | | 530 | | ·75 | ·64 | ·62 | | | | | 675 |
| ·30 | ·20 | ·18 | | | | | 630 | | | | | | | | |

**NOTE**: THE MAXIMUM THICKNESS TO BE RIVETED, SHOWN FOR USE WITH C'S'K. HEAD RIVETS, APPLIES WHERE THE PLATES HAVE BEEN C'S'K. BY MACHINING AND NOT DIMPLING. THE MAXIMUM THICKNESS OF PLATES WHICH CAN BE USED WITH C'S'K. HEAD RIVETS WHERE DIMPLING IS USED, IS EQUAL TO THAT OF THE DOMED HEAD.

**N.B.** NOT TO BE USED IN ENGINE AIR INTAKES.

## METHOD OF CALLING UP:-

A 1/8" DIA. DOMED HEAD POP RIVET ·29 LONG WILL BE

| A.G.S.2050 | / | 429 | / | BH * |
|---|---|---|---|---|
| BASIC PART Nº | | DIA. & LENGTH 'L' | | BREAK HEAD MANDREL |

* BREAK HEAD MANDREL PREFERRED.

| ISSUE Nº | DATE |
|---|---|
| 1 | JULY '56 |

DRAWN

TRACED L.B.

APPROVED T. Young.

DRAWING OFFICE DATA SHEET Nº 1/10 B

'POP' RIVETS (MONEL)

# THE DE HAVILLAND AIRCRAFT Co LTD. HATFIELD. HERTS.

## ROUND HEAD WOODSCREWS.

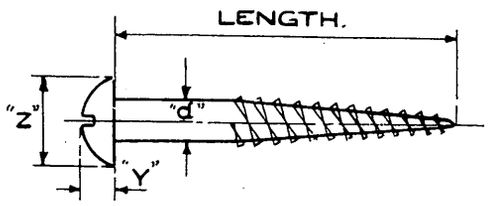


| | |
|---|---|
| BRASS | A.G.S. 252 |
| MILD STEEL | A.G.S. 253 |
| STAINLESS STEEL. | A.G.S. 894 |

| SCREW GAUGE | Nº2 | Nº4 | Nº6 | Nº8 | Nº10 | Nº12 | Nº14 |
|---|---|---|---|---|---|---|---|
| d | ·08" | ·108" | ·136" | ·164" | ·192" | ·220" | ·248" |
| Y | ·06" | ·081" | ·102" | ·123" | ·144" | ·165" | ·186" |
| Z | ·16" | ·216" | ·272" | ·328" | ·384" | ·440" | ·496" |
| DIA. HOLE IN METAL PLATE. | Nº 36 DRILL | Nº 30 DRILL | Nº 24 DRILL | Nº 14 DRILL | Nº 4 DRILL | B DRILL | F DRILL |
| LENGTH | PART NUMBERS. | | | | | | |
| 1/4" | 1 | 18 | 35 | 52 | | | |
| 3/8" | 2 | 19 | 36 | 53 | 70 | | |
| 1/2" | 3 | 20 | 37 | 54 | 71 | 88 | |
| 5/8" | 4 | 21 | 38 | 55 | 72 | 89 | 106 |
| 3/4" | 5 | 22 | 39 | 56 | 73 | 90 | 107 |
| 7/8" | 6 | 23 | 40 | 57 | 74 | 91 | 108 |
| 1" | 7 | 24 | 41 | 58 | 75 | 92 | 109 |
| 1 1/4" | | 25 | 42 | 59 | 76 | 93 | 110 |
| 1 1/2" | | 26 | 43 | 60 | 77 | 94 | 111 |
| 1 3/4" | | 27 | 44 | 61 | 78 | 95 | 112 |
| 2" | | 28 | 45 | 62 | 79 | 96 | 113 |
| 2 1/4" | | | 46 | 63 | 80 | 97 | 114 |
| 2 1/2" | | | 47 | 64 | 81 | 98 | 115 |
| 2 3/4" | | | 48 | 65 | 82 | 99 | 116 |
| 3" | | | 49 | 66 | 83 | 100 | 117 |
| 3 1/2" | | | | 67 | 84 | 101 | 118 |
| 4" | | | | 68 | 85 | 102 | 119 |

## C'SK. HEAD WOODSCREWS.

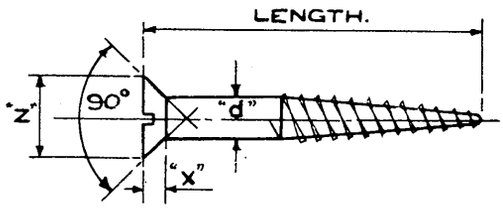


| | |
|---|---|
| BRASS. | A.G.S. 250 |
| MILD STEEL. | A.G.S. 251 |
| STAINLESS STEEL. | A.G.S. 893 |

| SCREW GAUGE | Nº2 | Nº3 | Nº4 | Nº6 | Nº8 | Nº10 | Nº12 | Nº14 |
|---|---|---|---|---|---|---|---|---|
| d | ·08" | ·094" | ·108" | ·136" | ·164" | ·192" | ·220" | ·248" |
| X | ·04" | ·047" | ·054" | ·068" | ·082" | ·096" | ·110" | ·124" |
| Z | ·160" | ·188" | ·216" | ·272" | ·328" | ·384" | ·440" | ·496" |
| DIA. HOLE IN METAL PLATE | Nº 36 DRILL | Nº 35 DRILL | Nº 30 DRILL | Nº 24 DRILL | Nº 14 DRILL | Nº 4 DRILL | B DRILL | F DRILL |
| LENGTH | PART NUMBERS. | | | | | | | |
| 1/4" | 1 | 1A | 18 | 35 | 52 | | | |
| 3/8" | 2 | 2A | 19 | 36 | 53 | 70 | | |
| 1/2" | 3 | 3A | 20 | 37 | 54 | 71 | 88 | 105 |
| 5/8" | 4 | | 21 | 38 | 55 | 72 | 89 | 106 |
| 3/4" | 5 | | 22 | 39 | 56 | 73 | 90 | 107 |
| 7/8" | 6 | | 23 | 40 | 57 | 74 | 91 | 108 |
| 1" | 7 | | 24 | 41 | 58 | 75 | 92 | 109 |
| 1 1/4" | 8 | | 25 | 42 | 59 | 76 | 93 | 110 |
| 1 1/2" | 9 | | 26 | 43 | 60 | 77 | 94 | 111 |
| 1 3/4" | 10 | | 27 | 44 | 61 | 78 | 95 | 112 |
| 2" | 11 | | 28 | 45 | 62 | 79 | 96 | 113 |
| 2 1/4" | 12 | | 29 | 46 | 63 | 80 | 97 | 114 |
| 2 1/2" | 13 | | 30 | 47 | 64 | 81 | 98 | 115 |
| 2 3/4" | 14 | | 31 | 48 | 65 | 82 | 99 | 116 |
| 3" | 15 | | 32 | 49 | 66 | 83 | 100 | 117 |
| 3 1/2" | | | | 50 | 67 | 84 | 101 | 118 |
| 4 | | | | | 68 | 85 | 102 | 119 |

NUMBERS ENCLOSED WITHIN HEAVY BORDERS APPLY ONLY TO BRASS SCREWS. A.G.S. 250.

| ISSUE Nº | DATE. |
|---|---|
| 1 | |

COMPILED BY. B.P. WILSON.

TRACED BY

APPROVED BY. A.B. Baker

METHOD OF CALLING UP ON DRAWING.

A.G.S. 252 41 — WOODSCREW Nº6 x 1" RD. Hº BRASS.

C'SK HOLES FOR WOODSCREW IN DETAIL FITTINGS SHOULD BE QUOTED THUS:- DRILL Nº 24 AND C'SK AT 90° TO ·272 FOR Nº 6 C'SK. WOODSCREW.

# WOODSCREWS

DRAWING OFFICE DATA SHEET No. 1/11.

# THE DE HAVILLAND AIRCRAFT COMPANY LIMITED, HATFIELD, HERTS.

## PRESSED END CLIPS

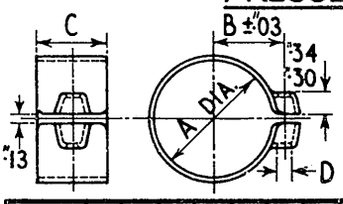


A.S. 486. 20 S.W.G. M.S. S.84.
A.S. 1162. 20 S.W.G. ALCLAD D.T.D. 610.
D = 13/64" DIA. C = 1·0

A.S. 1157. 20 S.W.G. M.S. S.84.
A.S. 1163. 20 S.W.G. ALCLAD D.T.D. 610.
D = 17/64" DIA. C = 1·25

| MARK Nº | | 8 | 9 | 10 | 11 | 12 | 13 | 14 | 15 | 16 | 18 | 20 | 22 | 23 | 24 | 26 | 28 | 30 | 32 |
|---|---|---|---|---|---|---|---|---|---|---|---|---|---|---|---|---|---|---|---|
| A DIA. | | 1·00 | 1·13 | 1·25 | 1·38 | 1·50 | 1·63 | 1·75 | 1·88 | 2·00 | 2·25 | 2·50 | 2·75 | 2·88 | 3·00 | 3·25 | 3·50 | 3·75 | 4·00 |
| B | AS.486 AS.1162 | ·69 | ·75 | ·81 | ·88 | ·94 | 1·00 | 1·06 | 1·13 | 1·19 | 1·31 | 1·43 | 1·56 | 1·63 | 1·69 | 1·81 | 1·94 | 2·06 | 2·19 |
| | AS.1157 AS.1163 | ·75 | ·81 | ·88 | ·94 | 1·00 | 1·06 | 1·13 | 1·19 | 1·25 | 1·38 | 1·50 | 1·63 | 1·69 | 1·75 | 1·88 | 2·00 | 2·13 | 2·25 |

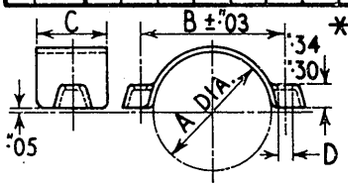


* A.S. 487. 20 S.W.G. M.S. S.84.
A.S. 490. 20 S.W.G. ALCLAD D.T.D. 610.
D = 13/64" DIA. C = 1·0

A.S. 1158. 20 S.W.G. M.S. S.84.
A.S. 1161. 20 S.W.G. ALCLAD D.T.D. 610.
D = 17/64" DIA. C = 1·25

| MARK Nº | | 8 | 9 | 10 | 11 | 12 | 13 | 14 | 15 | 16 | 18 | 20 | 22 | 24 | 26 | 28 | 30 | 32 |
|---|---|---|---|---|---|---|---|---|---|---|---|---|---|---|---|---|---|---|
| A DIA. | | 1·00 | 1·13 | 1·25 | 1·38 | 1·50 | 1·63 | 1·75 | 1·88 | 2·00 | 2·25 | 2·50 | 2·75 | 3·00 | 3·25 | 3·50 | 3·75 | 4·00 |
| B | AS.487 AS.490 | 1·38 | 1·50 | 1·63 | 1·75 | 1·88 | 2·00 | 2·13 | 2·25 | 2·38 | 2·63 | 2·88 | 3·13 | 3·38 | 3·63 | 3·88 | 4·13 | 4·38 |
| | AS.1158 AS.1161 | 1·50 | 1·63 | 1·75 | 1·88 | 2·00 | 2·13 | 2·25 | 2·38 | 2·50 | 2·75 | 3·00 | 3·25 | 3·50 | 3·75 | 4·00 | 4·25 | 4·50 |

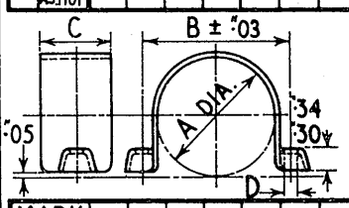


A.S. 488. 20 S.W.G. M.S. S.84.
A.S. 489. 20 S.W.G. ALCLAD D.T.D. 610.
D = 13/64" DIA. C = 1·0

A.S. 1159. 20 S.W.G. M.S. S.84.
A.S. 1160. 20 S.W.G. ALCLAD D.T.D. 610.
D = 17/64" DIA. C = 1·25

| MARK Nº | | 8 | 9 | 10 | 11 | 12 | 13 | 14 | 15 | 16 | 18 | 20 | 22 | 24 | 26 | 28 | 30 | 32 |
|---|---|---|---|---|---|---|---|---|---|---|---|---|---|---|---|---|---|---|
| A DIA. | | 1·00 | 1·13 | 1·25 | 1·38 | 1·50 | 1·63 | 1·75 | 1·88 | 2·00 | 2·25 | 2·50 | 2·75 | 3·00 | 3·25 | 3·50 | 3·75 | 4·00 |
| B | AS.488 AS.489 | 1·56 | 1·68 | 1·81 | 1·93 | 2·06 | 2·18 | 2·31 | 2·43 | 2·56 | 2·81 | 3·06 | 3·31 | 3·56 | 3·81 | 4·06 | 4·31 | 4·56 |
| | AS.1159 AS.1160 | 1·63 | 1·75 | 1·88 | 2·00 | 2·13 | 2·25 | 2·38 | 2·50 | 2·63 | 2·88 | 3·13 | 3·38 | 3·63 | 3·88 | 4·13 | 4·38 | 4·63 |

*NOTE:- FOR SIZES FROM ·50 DIA. TO 1·0 DIA. USE D.H.S.64 CLIPS.

## HOSE CLIPS

A.G.S. 605.

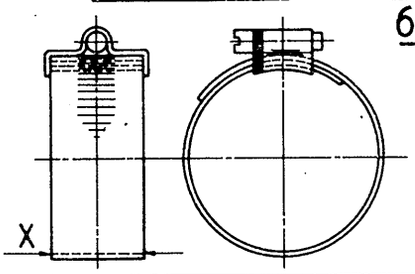


| PART Nos A.G.S. 605 | SUITABLE FOR PIPES O/D. | MAX. | DIM. X |
|---|---|---|---|
| 00 | 1/2" | 5/8" | ·437 |
| 0 | OVER 5/8" | 7/8" | ·5 |
| 1A | OVER 7/8" | 1 3/8" | ·5 |
| 1 | OVER 7/8" | 1 1/2" | ·5 |
| 1X | OVER 1" | 1 5/8" | ·5 |
| 2 | OVER 1 1/2" | 2" | ·5 |
| 3 | OVER 2" | 2 3/4" | ·5 |
| 4 | OVER 2 3/4" | 3 1/2" | ·5 |
| 5 | OVER 3 1/2" | 4 1/8" | ·5 |
| 6 | OVER 4 1/8" | 5" | ·5 |

A.G.S. 606.

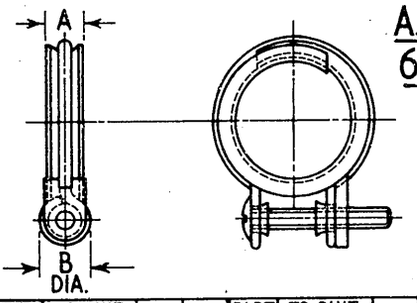


| PART Nº | TO SUIT PIPE O/D. | A | B | PART Nº | TO SUIT PIPE O/D. | A | B |
|---|---|---|---|---|---|---|---|
| A | 5/16" | ·28 | ·46 | G | 11/16" | ·28 | ·46 |
| B | 3/8" | ·28 | ·46 | H | 3/4" | ·28 | ·46 |
| C | 7/16" | ·28 | ·46 | I | 13/16" | ·28 | ·46 |
| D | 1/2" | ·28 | ·46 | J | 7/8" | ·28 | ·46 |
| E | 9/16" | ·28 | ·46 | K | 15/16" | ·28 | ·46 |
| F | 5/8" | ·28 | ·46 | | | | |

NOTE:- A.G.S. 605 CLIP IS TO BE USED, BUT A.G.S. 606. MAY BE USED UP TO 1" IF NECESSARY.

## SPRING CLIPS

ALTERNATIVE END VIEW WHEN TWO FIXING HOLES ARE PROVIDED.

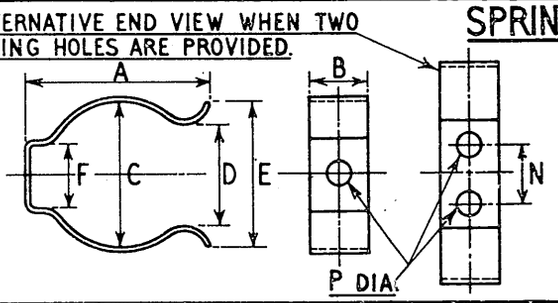


ALTERNATIVE END VIEW WHEN TWO FIXING HOLES ARE PROVIDED.

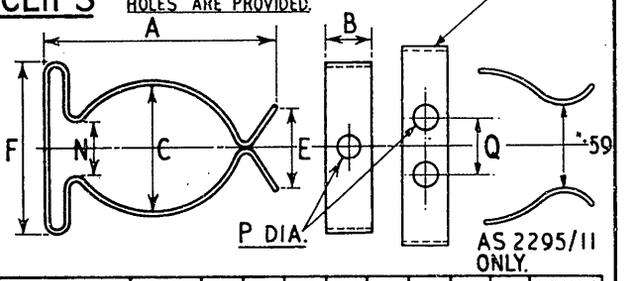


| PART Nº | TO GRIP DIA. | A | B | C | D | E | F | N | P | MATERIAL THICKNESS |
|---|---|---|---|---|---|---|---|---|---|---|
| A.S. 2294/1 | 1/4" | ·41 | ·25 | ·23 | ·16 | ·25 | ·14 | — | 3/32" | ·015 |
| A.S. 2294/2 | 3/8" | ·53 | ·25 | ·33 | ·19 | ·34 | ·17 | — | 3/32" | ·015 |
| A.S. 2294/3 | 1/2" | ·69 | ·31 | ·47 | ·31 | ·50 | ·20 | — | 3/32" | ·018 |
| A.S. 2294/4 | 5/8" | ·78 | ·31 | ·59 | ·34 | ·56 | ·27 | — | 3/32" | ·018 |
| A.S. 2294/5 | 3/4" | 1·06 | ·38 | ·70 | ·31 | ·63 | ·34 | — | 1/8" | ·020 |
| A.S. 2294/6 | 1" | 1·19 | ·38 | ·95 | ·69 | ·94 | ·41 | — | 1/8" | ·030 |
| | | | | | | | | | | |
| A.S. 2294/8 | 1 1/4" | 1·53 | ·44 | 1·13 | ·78 | 1·25 | ·47 | — | 1/8" | ·030 |
| A.S. 2294/9 | 1 1/2" | 1·84 | ·44 | 1·34 | ·81 | 1·19 | ·55 | — | 1/8" | ·036 |
| A.S. 2294/10 | 1 3/4" | 1·93 | ·50 | 1·63 | 1·15 | 1·35 | ·88 | ·50 | 9/64" | ·04 |
| A.S. 2294/11 | 2 1/4" | 2·18 | ·75 | 1·84 | 1·70 | 1·85 | 1·52 | ·875 | 3/16" | ·026 |
| A.S. 2294/12 | 2 1/2" | 2·18 | ·75 | 2·13 | 2·0 | 2·31 | 1·57 | ·656 | 3/16" | ·040 |
| A.S. 2294/13 | 2 1/16" | 2·2 | 1·0 | 1·8 | 1·25 | 1·88 | ·8 | ·56 | ·159 | ·036 |

| PART Nº | TO GRIP DIA. | A | B | C | Q | E | F | N | P | MATERIAL THICKNESS |
|---|---|---|---|---|---|---|---|---|---|---|
| A.S. 2295/1 | 1/4" | ·66 | ·25 | ·20 | — | ·25 | ·59 | ·13 | 3/32" | ·015 |
| A.S. 2295/2 | 3/8" | ·78 | ·25 | ·28 | — | ·34 | ·66 | ·13 | 3/32" | ·015 |
| A.S. 2295/3 | 1/2" | 1·06 | ·31 | ·44 | — | ·44 | ·94 | ·22 | 1/8" | ·018 |
| A.S. 2295/4 | 5/8" | 1·22 | ·31 | ·53 | — | ·44 | ·97 | ·28 | 1/8" | ·018 |
| A.S. 2295/5 | 3/4" | 1·38 | ·31 | ·63 | — | ·44 | 1·06 | ·25 | 1/8" | ·018 |
| A.S. 2295/6 | 1" | 1·59 | ·31 | ·75 | — | ·56 | 1·13 | ·38 | 1/8" | ·022 |
| A.S. 2295/7 | 1 1/8" | 2·06 | ·38 | ·94 | — | ·63 | 1·38 | ·47 | 9/64" | ·025 |
| A.S. 2295/8 | 1 1/4" | 2·38 | ·44 | ·97 | — | ·75 | 1·91 | ·59 | 9/64" | ·030 |
| A.S. 2295/9 | 1 1/2" | 2·81 | ·50 | 1·20 | ·312 | ·94 | 2·19 | ·41 | 5/32" | ·036 |
| | | | | | | | | | | |
| A.S. 2295/11 | 2" | 2·91 | ·50 | 1·70 | ·50 | 1·50 | 2·38 | ·59 | 5/32" | ·040 |

FOR D.H. STANDARD :- SADDLE CLIPS SEE D.H.S. 28 & 29 →
FOR D.H. STANDARD :- "P" CLIPS SEE D.H.S. 86. →
FOR D.H. STANDARD :- TUBULAR CLIPS SEE D.H.S. 31. →
FOR A.S. STANDARD :- "P" CLIPS SEE SHEET 1/12 B.
FOR DUNLOP RUBBER BONDED CLIPS SEE SHEET 1/12 B.

| ISSUE Nº | DATE |
|---|---|
| 2 | 26·10·49 |
| 3 | MARCH '55 |

DRAWN: D.L. BYGRAVE
TRACED: DOLTON DRAWING CO. 14 - 2 - 1950
APPROVED: D. Kight

# CLIPS

DRAWING OFFICE DATA SHEET Nº 1/12 A

48

# THE DE HAVILLAND AIRCRAFT COMPANY LTD., HATFIELD, HERTS.

## A.S. 3180. 'P' CLIP. ALUMINIUM L.16 RUBBER COVERED. HELSYN GRADE 'K' RESISTANT TO PARAFFIN, PETROL & OIL.

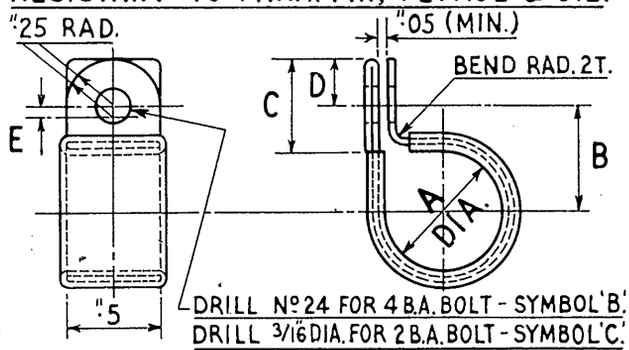


| MARK Nº | DIA. A | B | C | D | OFFSET E | MAT'L S.W.G |
|---|---|---|---|---|---|---|
| 3 | 3/16" | ".34 | ".38 | ".19 | ".06 | 22 |
| 4 | 1/4" | ".375 | ".38 | ".19 | ".06 | 22 |
| 5 | 5/16" | ".40 | ".38 | ".19 | ".06 | 22 |
| 6 | 3/8" | ".43 | ".38 | ".19 | ".06 | 22 |
| 7 | 7/16" | ".46 | ".38 | ".19 | ".06 | 22 |
| 8 | 1/2" | ".55 | ".50 | ".25 | — | 22 |
| 9 | 9/16" | ".58 | ".50 | ".25 | — | 22 |
| 10 | 5/8" | ".61 | ".50 | ".25 | — | 22 |
| 11 | 11/16" | ".64 | ".50 | ".25 | — | 22 |
| 12 | 3/4" | ".70 | ".50 | ".25 | — | 20 |
| 13 | 13/16" | ".73 | ".50 | ".25 | — | 20 |
| 14 | 7/8" | ".75 | ".50 | ".25 | — | 20 |
| 15 | 15/16" | ".79 | ".50 | ".25 | — | 20 |
| 16 | 1" | ".82 | ".50 | ".25 | — | 20 |
| 18 | 1 1/8" | ".88 | ".50 | ".25 | — | 20 |
| 20 | 1 1/4" | ".94 | ".50 | ".25 | — | 20 |

## A.S. 3181. 'P' CLIP. ALCLAD D.T.D. 610.

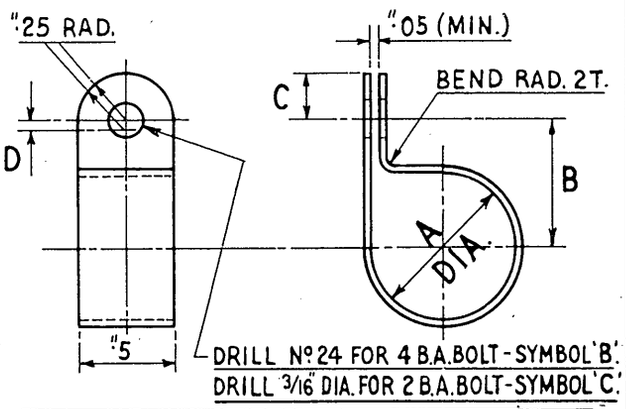


| MARK Nº | DIA. A | B | C | OFFSET D | MAT'L S.W.G |
|---|---|---|---|---|---|
| 3 | 3/16" | ".32 | ".19 | ".06 | 22 |
| 4 | 1/4" | ".35 | ".19 | ".06 | 22 |
| 5 | 5/16" | ".38 | ".19 | ".06 | 22 |
| 6 | 3/8" | ".41 | ".19 | ".06 | 22 |
| 7 | 7/16" | ".44 | ".19 | ".06 | 22 |
| 8 | 1/2" | ".53 | ".25 | — | 22 |
| 9 | 9/16" | ".56 | ".25 | — | 22 |
| 10 | 5/8" | ".60 | ".25 | — | 22 |
| 11 | 11/16" | ".63 | ".25 | — | 22 |
| 12 | 3/4" | ".67 | ".25 | — | 20 |
| 13 | 13/16" | ".70 | ".25 | — | 20 |
| 14 | 7/8" | ".73 | ".25 | — | 20 |
| 15 | 15/16" | ".76 | ".25 | — | 20 |
| 16 | 1" | ".79 | ".25 | — | 20 |
| 18 | 1 1/8" | ".85 | ".25 | — | 20 |
| 20 | 1 1/4" | ".91 | ".25 | — | 20 |
| 24 | 1 1/2" | 1".05 | ".25 | — | 18 |
| 28 | 1 3/4" | 1".18 | ".25 | — | 18 |
| 32 | 2" | 1".30 | ".25 | — | 18 |

### METHOD OF CALLING UP:-

A CLIP 1/2" INSIDE DIA. DRILLED FOR A 2 B.A. BOLT WILL BE:-

A.S. -------- / 8 / C

BASIC PART NUMBER. / MARK NUMBER FOR DIA. OF CLIP REQUIRED. / IDENTIFICATION SYMBOL FOR SIZE OF DRILL HOLE.

CLIPS OF 1/2" INSIDE DIA. AND OVER CAN BE DRILLED OUT TO SUIT 1/4" B.S.F. BOLTS (DRILL LETTER 'F') IN WHICH CASE CLIPS WILL BE CALLED UP WITH SUFFIX 'E'.

## 'DUNLOP' RUBBER BONDED CLIP.

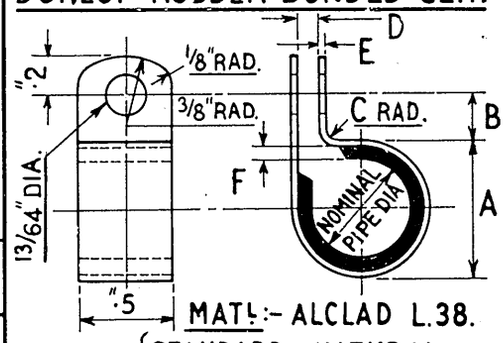


MAT'L:- ALCLAD L.38.

FINISH:- STANDARD:- NATURAL. PARAFF. RESIS:- ANODISED RED.

| PART NUMBERS STANDARD | PARAFF. RESIS. | NOMAL PIPE DIA | A DIA. | B | C RAD. | D | E S.W.G. | F |
|---|---|---|---|---|---|---|---|---|
| DAS.151/03 | DAS.185/03 | 3/16" | ".389 | ".25 | ".05 | ".05 | 20 | ".06 |
| DAS.151/04 | DAS.185/04 | 1/4" | ".452 | ".25 | ".05 | ".09 | 20 | ".06 |
| DAS.151/05 | DAS.185/05 | 5/16" | ".554 | ".25 | ".05 | ".12 | 20 | ".08 |
| DAS.151/06 | DAS.185/06 | 3/8" | ".617 | ".25 | ".05 | ".12 | 20 | ".08 |
| DAS.151/07 | DAS.185/07 | 7/16" | ".679 | ".25 | ".05 | ".12 | 20 | ".08 |
| DAS.151/08 | DAS.185/08 | 1/2" | ".742 | ".25 | ".05 | ".12 | 20 | ".08 |
| DAS.151/09 | DAS.185/09 | 9/16" | ".878 | ".30 | ".10 | ".15 | 18 | ".10 |
| DAS.151/10 | DAS.185/10 | 5/8" | ".941 | ".30 | ".10 | ".15 | 18 | ".10 |
| DAS.151/12 | DAS.185/12 | 3/4" | 1".066 | ".30 | ".10 | ".15 | 18 | ".10 |
| DAS.151/14 | DAS.185/14 | 7/8" | 1".191 | ".30 | ".10 | ".15 | 18 | ".10 |
| DAS.151/16 | DAS.185/16 | 1" | 1".316 | ".30 | ".10 | ".15 | 18 | ".10 |
| DAS 151/18 | DAS.185/18 | 1 1/8" | 1".441 | ".30 | ".10 | ".15 | 18 | ".10 |
| DAS.151/20 | DAS.185/20 | 1 1/4" | 1".566 | ".30 | ".10 | ".15 | 18 | ".10 |

### METHOD OF CALLING UP:-

(ADD THE WORD "DUNLOP" AS BELOW TO AVOID CONFUSING D.A.S & D.H.S.)

E.G. (D.A.S. 151/07) 7/16" "DUNLOP" CLIP.

NOTE:- A.S. 3180 SHOULD BE USED IN PREFERENCE, IF ALUM. IS SUFFICIENTLY STIFF.

| ISSUE Nº | DATE |
|---|---|
| 2 | FEB. '50 |
| | |
| | |
| | |

DRAWN: D.L. BYGRAVE

TRACED: DOLTON DWG. Co. 10 · 2 · 1950

APPROVED: D. Kingsman

# "P" CLIPS

DRAWING OFFICE DATA SHEET Nº 1/12 B

# THE DE HAVILLAND AIRCRAFT COMPANY LTD. HATFIELD, HERTS.

## STANDARD ENGINEERING BALL BEARINGS

| TYPE OF BEARING | | BORE "A" | O/DIA. "D" | WIDTH "W" | RAD. "R" | MAX.LOAD FULLY FACTORED | WEIGHT (LBS.) | B.S.S. SYMBOL | MANUFACTURERS CODE Nº S.K.F. | HOFFMAN | R.&M. | LIMITS OF SHAFT | LIMITS OF HOUSING | ABUTMENT DIA. SHAFT | HOUSING |
|---|---|---|---|---|---|---|---|---|---|---|---|---|---|---|---|
| DOUBLE ROW SELF-ALIGNING | EXTRA SMALL SERIES | 5 M/M | 19 M/M | 6 M/M | ·5 M/M | (LBS) 1,650 | ·02 | | 13.300 | U.105 | NLJ.5 | ·1963 ·1958 | ·7486 ·7478 | ·314 | ·625 |
| | | 6 M/M | 19 M/M | 6 M/M | ·5 M/M | 1,730 | ·02 | | 13.301 | U.106 | NLJ.6 | ·2356 ·2351 | ·7486 ·7478 | ·375 | ·625 |
| | | 8 M/M | 22 M/M | 7 M/M | ·5 M/M | 1,900 | ·03 | | 13.303 | U.108 | NLJ.8 | ·3144 ·3139 | ·8667 ·8659 | ·4375 | ·75 |
| | METRIC | 10 M/M | 30 M/M | 9 M/M | 1 M/M | 3,750 | ·08 | BAL.010 | 1.200 | U.110 | NLJ.10 | ·3931 ·3926 | 1·1817 1·1809 | ·60 | 1·0 |
| | | 12 M/M | 32 M/M | 10 M/M | 1 M/M | 4,050 | ·09 | BAL.012 | 1.201 | U.112 | NLJ.12 | ·4718 ·4713 | 1·2604 1·2596 | ·67 | 1·0625 |
| | LIGHT SERIES INCH | 1/2" | 1 5/16" | 3/8" | 1/32" | 4,850 | ·10 | BAL.1/2 | R.L.4. | ULS.5 | NLJ.1/2 | ·4995 ·4990 | 1·3127 1·3120 | ·68 | 1·125 |
| | | 5/8" | 1 9/16" | 7/16" | 1/32" | 6,300 | ·16 | BAL.5/8 | R.L.5. | ULS.7 | NLJ.5/8 | ·6245 ·6240 | 1·5627 1·5620 | ·83 | 1·5 |
| | | 3/4" | 1 7/8" | 9/16" | 1/16" | 9,600 | ·30 | BAL.3/4 | R.L.6. | ULS.8 | NLJ.3/4 | ·7495 ·7488 | 1·8752 1·8745 | 1·0 | 1·625 |
| | | 7/8" | 2" | 9/16" | 1/16" | 10,000 | ·30 | BAL.7/8 | R.L.7. | ULS.9 | NLJ.7/8 | ·8745 ·8738 | 2·0000 1·9993 | 1·125 | 1·75 |
| | | 1" | 2 1/4" | 5/8" | 1/16" | 12,500 | ·46 | BAL.1 | R.L.8. | ULS.10 | NLJ.1 | ·9995 ·9988 | 2·25 2·2493 | 1·25 | 2·0 |
| | | 1 1/4" | 2 3/4" | 11/16" | 1/16" | 15,500 | ·73 | BAL.1 1/4 | R.L.10. | ULS.12 | NLJ.1 1/4 | 1·2495 1·2488 | 2·75 2·7493 | 1·5 | 2·375 |
| | | 1 1/2" | 3 1/4" | 3/4" | 3/32" | 19,000 | 1·18 | BAL.1 1/2 | R.L.12. | ULS.13 | NLJ.1 1/2 | 1·4994 1·4986 | 3·2497 3·2488 | 1·875 | 2·875 |
| | | 1 3/4" | 3 3/4" | 13/16" | 3/32" | 22,500 | 1·62 | BAL.1 3/4 | R.L.14. | ULS.14 | NLJ.1 3/4 | 1·7494 1·7486 | 3·7497 3·7488 | 2·125 | 3·375 |
| | | 2" | 4" | 13/16" | 3/32" | 26,000 | 1·88 | BAL.2 | R.L.16. | ULS.15 | NLJ.2 | 1·9994 1·9986 | 3·9997 3·9988 | 2·375 | 3·625 |
| DEEP GROOVE SINGLE ROW BEARING | EXTRA SMALL SERIES | 4 M/M | 16 M/M | 5 M/M | ·5 M/M | 900 | ·011 | | R.4. | 104 | LJ.4 | ·1569 ·1564 | ·6305 ·6297 | ·281 | ·5 |
| | | 6 M/M | 19 M/M | 6 M/M | ·5 M/M | 1,340 | ·018 | | R.5/6 | 106 | LJ.6 | ·2356 ·2351 | ·7486 ·7478 | ·375 | ·625 |
| | | 8 M/M | 22 M/M | 7 M/M | ·5 M/M | 1,460 | ·027 | | R.7/8 | 108 | LJ.8 | ·3144 ·3139 | ·8667 ·8659 | ·4375 | ·75 |
| | LIGHT SERIES NARROW TYPE | 1/4" | 3/4" | 7/32" | ·02" | 1,220 | ·016 | BRE.1/4 | EE.2 | S.1 | KLNJ.1/4 | ·2495 ·2490 | ·7502 ·7495 | ·40 | ·625 |
| | | 3/8" | 7/8" | 7/32" | ·02" | 1,680 | ·025 | BRE.3/8 | EE.3 | S.3 | KLNJ.3/8 | ·3745 ·374 | ·8752 ·8745 | ·53 | ·75 |
| | | 1/2" | 1 1/8" | 1/4" | ·02" | 2,400 | ·031 | BRE.1/2 | EE.4 | S.5 | KLNJ.1/2 | ·4995 ·499 | 1·1252 1·1245 | ·68 | 1·0 |
| | | 3/4" | 1 5/8" | 5/16" | ·04" | 4,800 | ·094 | BRE.3/4 | EE.6 | S.8 | KLNJ.3/4 | ·7495 ·7488 | 1·6252 1·6245 | 1·0 | 1·4375 |
| | | 1" | 2" | 3/8" | ·04" | 6,900 | ·188 | BRE.1 | EE.9 | S.10 | KLNJ.1 | ·9995 ·9988 | 2·0000 1·9997 | 1·25 | 1·75 |
| | LIGHT SERIES | 1 1/4" | 2 3/4" | 11/16" | 1/16" | 10,800 | ·66 | BRL.1 1/4 | RLS.10 | LS.12 | LJ.1 1/4 | 1·2495 1·2488 | 2·7500 2·7493 | 1·5 | 2·375 |
| | | 1 1/2" | 3 1/4" | 3/4" | 3/32" | 13,300 | ·99 | BRL.1 1/2 | RLS.12 | LS.13 | LJ.1 1/2 | 1·4994 1·4986 | 3·2497 3·2488 | 1·875 | 2·875 |
| | | 1 3/4" | 3 3/4" | 13/16" | 3/32" | 15,800 | 1·46 | BRL.1 3/4 | RLS.14 | LS.14 | LJ.1 3/4 | 1·7494 1·7486 | 3·7497 3·7488 | 2·125 | 3·375 |
| | | 2" | 4" | 13/16" | 3/32" | 18,200 | 1·54 | BRL.2 | RLS.16 | LS.15 | LJ.2 | 1·9994 1·9986 | 3·9997 3·9988 | 2·375 | 3·625 |

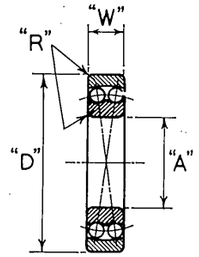


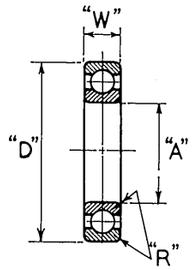


THE ABOVE RANGE OF BALL BEARINGS ARE FOR GENERAL USE AND SHOULD OBVIATE REFERENCES TO PROPRIETARY CATALOGUES. (SEE NOTE 1.)

## SPECIAL AIRCRAFT ENGINEERING BALL BEARINGS

| TYPE OF BEARING | BORE "A" | O/DIA "D" | WIDTH "W1" | WIDTH "W2" | RAD. "R" | MAX.LOAD FULLY FACTORED | WEIGHT (LBS) | MANUFACTURERS CODE Nº S.K.F. | HOFFMAN | R & M | LIMITS OF SHAFT | LIMITS OF HOUSING | ABUTMENT DIA. SHAFT | HOUSING |
|---|---|---|---|---|---|---|---|---|---|---|---|---|---|---|
| DOUBLE SELF-ALIGNING WITH SIDE PLATES | 8 M/M | 22 M/M | ·625" | 7 M/M | ·5 M/M | (LBS) 1,900 | | 400602 | | | ·31436 ·31386 | ·86674 ·86594 | ·4375" | ·75" |
| | THIS BEARING IS MADE TO SPECIALLY FINE LIMITS AND SHOULD BE USED WHEN TWO WAY THRUST IS EXERTED ON BEARING. | | | | | | | | | | | | | |
| | 8 M/M | 22 M/M | 8·5 M/M | 7 M/M | | 1,350 | ·031 | 1132465 | N.1156 | C.B.8. | ·31436 ·31386 | ·86674 ·86594 | ·3·75" | ·75" |
| | THIS BEARING HAS A SPHERICAL INNER RACE TO PERMIT A LARGE DEGREE OF SELF-ALIGNMENT. | | | | | | | | | | | | | |
| DEEP GROOVE SINGLE ROW WITH SIDE PLATES | 3/8" | 7/8" | 1/2" | 7/32" | ·03" | 3,000 | ·031 | 402266 | | C.F.3/8A. | ·3745 ·3740 | ·8752 ·8745 | ·53 | ·75 |
| | THIS TYPE OF BEARING IS USED IN THE S.B.A.C. CONTROL PULLEYS AND SHOULD BE USED IN SPECIAL PULLEYS OF A SIMILAR NATURE | | | | | | | | | | | | | |
| DEEP GROOVE DOUBLE ROW WITH SIDE PLATES | 1/2" | 1 1/8" | 5/8" | 7/16" | ·04" | 9,000 | ·095 | 401458 | | D.C.F.1/2 | ·4995 ·4990 | 1·1252 1·1245 | ·68 | ·9375 |
| | THIS TYPE OF BEARING IS USED IN THE S.B.A.C. CONTROL PULLEYS AND SHOULD BE USED IN SPECIAL PULLEYS OF A SIMILAR NATURE | | | | | | | | | | | | | |

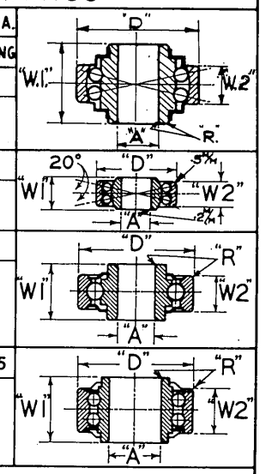


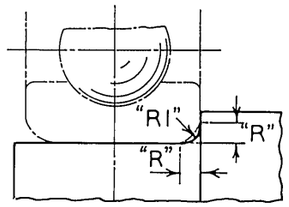


### RADII FOR SHAFT OR HOUSING ABUTMENT

| CORNER RADIUS ON BEARING "R" | 1/64" AND ·02" | 1/32" AND ·03" | ·04" | 1/16" | 3/32" | ·5 M/M | 1 M/M | 1·5 M/M | 2 M/M |
|---|---|---|---|---|---|---|---|---|---|
| ABUTMENT FILLET RADIUS "R1" | ·01" | ·03" | ·03" | ·05" | ·08" | ·3 M/M (·01") | ·6 M/M (·02") | 1 M/M (·04") | 1 M/M (·04") |

## STANDARD AIRCRAFT ENGINEERING BALL BEARINGS

| TYPE OF BEARING | BORE "A" | O/DIA. "D" | WIDTH "W1" | WIDTH "W2" | RAD. "R" | MAX.LOAD FULLY FACTORED | WEIGHT (LBS) | MANUFACTURERS CODE Nº S.K.F. | HOFFMAN | R.&M. | LIMITS OF SHAFT | LIMITS OF HOUSING | ABUTMENT DIA. SHAFT | HOUSING |
|---|---|---|---|---|---|---|---|---|---|---|---|---|---|---|
| TORQUE TUBE SERIES | 1 1/16" | 1 1/2" | 9/32" | 1/4" | ·015" | (LBS) 7,050 | ·054 | TTS.8 1/2 | T.17 | CA.1 1/16 | 1·0620 1·0613 | 1·5002 1·4995 | 1·1875 | 1·375 |
| | 1 5/16" | 1 3/4" | 9/32" | 1/4" | ·015" | 8,100 | ·065 | TTS.10 1/2 | T.21 | CA.1 5/16 | 1·3119 1·3111 | 1·7502 1·7495 | 1·4375 | 1·625 |
| | 1 9/16" | 2" | 9/32" | 1/4" | ·015" | 9,900 | ·078 | TTS.12 1/2 | T.25 | CA.1 9/16 | 1·5619 1·5611 | 2·0 1·9993 | 1·6875 | 1·875 |
| | 1 13/16" | 2 1/4" | 9/32" | 1/4" | ·015" | 11,100 | ·085 | TTS.14 1/2 | T.29 | CA.1 13/16 | 1·8119 1·8111 | 2·25 2·2493 | 1·9375 | 2·125 |
| | 2 1/16" | 2 5/8" | 9/32" | 1/4" | ·015" | 12,900 | ·125 | TTS.16 1/2 | T.33 | CA.2 1/16 | 2·0619 2·0611 | 2·6250 2·6243 | 2·1875 | 2·5 |
| | 2 5/16" | 2 7/8" | 9/32" | 1/4" | ·015" | 14,100 | ·150 | TTS.18 1/2 | T.37 | CA.2 5/16 | 2·3119 2·3111 | 2·8750 2·8743 | 2·4375 | 2·75 |
| DEEP GROOVE SINGLE ROW WITH SIDE PLATES | ·1898" | 5/8" | 1/4" | 13/64" | ·02" | 2,100 | ·029 | CBS.0 | CS.0 | CK.3/16 | ·1893 ·1888 | ·6252 ·6245 | ·282 | ·5 |
| | 1/4" | 3/4" | 5/16" | 7/32" | ·03" | 2,700 | ·029 | CBS.2 | CS.1 | CK.1/4 A | ·2495 ·2490 | ·7502 ·7495 | ·4 | ·625 |
| | 3/8" | 7/8" | 5/16" | 7/32" | ·03" | 3,000 | ·033 | CBS.3 | CS.3 | CK.3/8 A | ·3745 ·374 | ·8752 ·8745 | ·53 | ·75 |
| | 1/2" | 1 1/8" | 3/8" | 1/4" | ·04" | 5,100 | ·047 | CBS.4 | CS.5 | CK.1/2 A | ·4995 ·4990 | 1·1252 1·1245 | ·68 | ·9375 |
| | 5/8" | 1 3/8" | 13/32" | 9/32" | ·04" | 8,400 | ·078 | CBS.5 | CS.7 | CK.5/8 | ·6245 ·6240 | 1·3752 1·3745 | ·83 | 1·1875 |
| | ADDITIONAL BEARINGS WITH WIDER INNER RACES ARE AVAILABLE IN THIS RANGE. (SEE CATALOGUE.) | | | | | | | | | | | | | |
| SINGLE ROW SELF-ALIGNING BEARINGS WITH SIDE PLATES | ·1898" | ·7774" | ·297" | ·270" | 1/32" (R1) | 1/32" (R2) | 2,100 | ·025 | CBA.0 | CA.0 | CD.3/16 | ·1893 ·1888 | ·7776 ·7769 | ·312 | ·625 |
| | 1/4" | ·9014" | ·484" | ·335" | ·03" | ·02" | 2,700 | ·045 | CBA.2 | CA.1 | CD.1/4 | ·2495 ·2490 | ·9016 ·9009 | ·40 | ·75 |
| | 5/16" | 1 1/4" | ·5575" | ·375" | ·03" | ·02" | 4,200 | ·100 | CBA.2 1/2 | CA.2 | CD.5/16 | ·3120 ·3115 | 1·2502 1·2495 | ·47 | 1·0625 |
| | 5/16" | 7/8" | 5/8" | 5/16" | 1/64" | 1/64" | 3,600 | ·041 | I.132498 | N.3112 | CD.5/16 A | ·3120 ·3115 | ·8752 ·8745 | ·47 | ·75 |
| | 5/16" | 7/8" | ·520" | 5/16" | 1/64" | 1/64" | 3,600 | ·039 | I.132499 | N.3113 | CD.5/16 B | ·3120 ·3115 | ·8752 ·8745 | ·47 | ·75 |
| | 3/8" | 1 7/16" | ·620" | 15/32" | ·03" | ·02" | 9,000 | ·15 | CBA.3 | CA.3 | CD.3/8 | ·3745 ·3740 | 1·4377 1·4370 | ·53 | 1·25 |
| | 1/2" | 1 11/16" | ·620" | 1/2" | ·04" | ·03" | 11,100 | ·24 | CBA.4 | CA.5 | CD.1/2 | ·4995 ·4990 | 1·6877 1·6870 | ·68 | 1·5 |
| | 5/8" | 1 15/16" | 13/16" | 5/8" | ·04" | ·03" | 15,000 | ·37 | CBA.5 | CA.7 | CD.5/8 | ·6245 ·6240 | 1·9377 1·9370 | ·83 | 1·6875 |

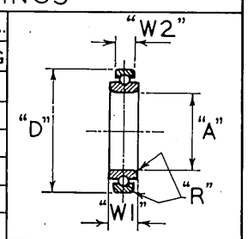


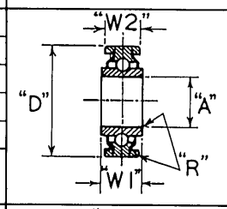


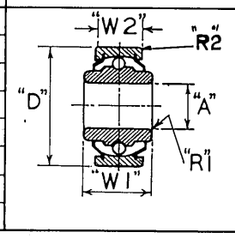


| ISSUE Nº | DATE |
|---|---|
| 1 | |
| 2 | 21·1·48. |
| 3. | Oct: 49 |

COMPILED
L. SPENCER.
TRACED
GARNET & Co 20 - 3 - '47
APPROVED

BALL BEARINGS

DRAWING OFFICE DATA SHEET Nº 1/13

NOTE. (1) METHOD OF CALLING UP.

WHERE A BEARING IS IN B.S.S. RANGE, THE B.S.S. REFERENCE ONLY MUST BE GIVEN ON DRAWING, EXCLUDING ALL REFERENCE TO PROPRIETARY PART NUMBERS. THIS AUTOMATICALLY ENSURES A NUMBER OF ALTERNATIVE SUPPLIES.
E.G. A DEEP GROOVE, SINGLE ROW, NARROW TYPE BEARING, WITH 3/8" BORE:- (BRE 3/8") BALL BEARING.

IN CASES WHERE THERE IS NO B.S.S. EQUIVALENT, THE S.K.F. PART NUMBER ONLY IS TO BE CALLED UP WITH HOFFMAN AND R.& M. ALTERNATIVES WHERE APPLICABLE.
E.G. A DOUBLE ROW SELF-ALIGNING BEARING WITH AN 8 M/M BORE :— (S.K.F. 13303) BALL BEARING ALTERNATIVES HOFFMAN U.108. R.& M. NLJ.8.

(2) THE LOADS GIVEN ARE MAXIMUM PERMISSABLE RADIAL LOADS. FOR MAXIMUM PERMISSABLE THRUST LOADS SEE S.K.F. CATALOGUE.

(3) THRUST RACES AND SPECIAL BEARINGS ARE TO BE OBTAINED FROM CATALOGUES OF MAKERS APPROVED BY THE DRAWING OFFICE.

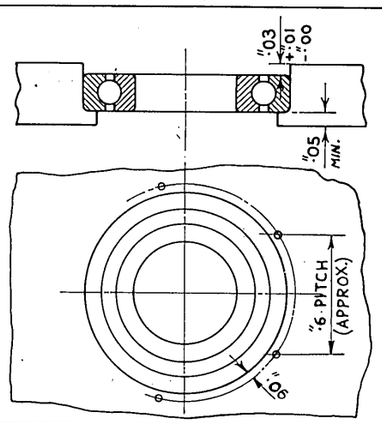


### CAULKING OF BALL RACE HOUSINGS.

1. PROCEDURE FOR CAULKING OF BALL RACE HOUSINGS IS GIVEN ON D.H.S. 522 WHICH MUST BE CALLED UP AS:—

   EXAMPLE (BALL BEARING CAULK TO D.H.S. 522.)

   THIS GIVES THE REQUIRED Nº OF CAULKS EVENLY SPACED AT APPROXIMATELY ·6" PITCH.
2. THE HOUSING ABUTMENT IS GIVEN FOR EACH BALL RACE IN THE TABLES ON THIS SHEET. ITS DEPTH SHOULD NOT BE LESS THAN ·05".
3. WHERE A DEFINITE SIDE LOAD OCCURS OTHER METHODS OF FIXING MUST BE USED.
4. FOR INCIDENTAL SIDE LOADS UP TO 100 LBS. CAULKING IS PERMISSIBLE.

THE DE HAVILLAND AIRCRAFT COMPANY LTD. HATFIELD. HERTS.

# D.H.S. 575

SHEET Nº 1 | Nº OF SHEETS 2

## PREFERRED METHOD

FITTING WITH BALL RACE RETAINED BY A RING ON EACH SIDE.

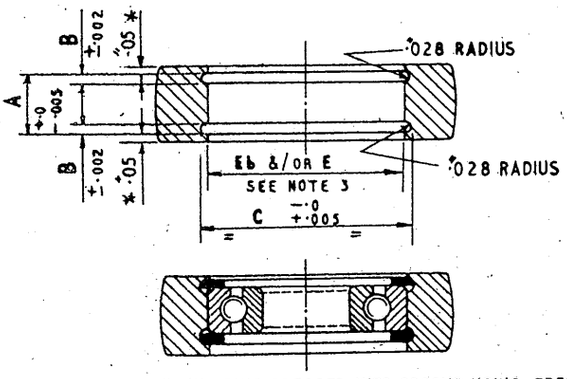


FITTING WITH BALL RACE RETAINED BY AN ABUTMENT & ONE RETAINING RING

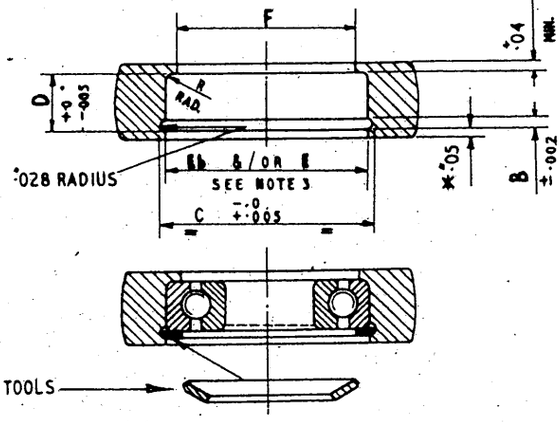


LIGHT ALLOY RETAINING RING PRESSED INTO GROOVE USING SPECIAL TOOLS →

* THICKNESS DIM ·05 IS A RECOMMENDED MINIMUM BUT MAY BE VARIED TO SUIT THE MATERIAL BEING USED.

| MARK Nº | ISSUE NUMBER | BALL BEARING MANUFACTURERS CODE B.S. | S.K.F. | HOFFMAN | R & M | BORE DIA. Eb (BEFORE CADMIUM) | FINAL BORE DIA E (STEEL & LIGHT ALLOY) | ABUTMENT DIA F | RADIUS R | RETAINING RING GROOVE WIDTH B | DIA. C | WIDTH A | WIDTH D | W & S RETAINING RING PART Nº STANDARD | OVERSIZE |
|---|---|---|---|---|---|---|---|---|---|---|---|---|---|---|---|
| 1 | 1 | BAL005 | 13300 | U 105 | NLJ 5 | ·7492 ·7484 | ·7486 ·7478 | ·625 | ·01 | ·056 | ·818 | ·266 | ·251 | A25 X | A25 X0 |
| 2 | 1 | BAL006 | 13301 | U 106 | NLJ 6 | ·7492 ·7484 | ·7486 ·7478 | ·625 | ·01 | ·056 | ·818 | ·266 | ·251 | A25 X | A25 X0 |
| 3 | | | | | | | | | | | | | | | |
| 4 | 1 | BAL008 | 13303 | U 108 | NLJ 8 | ·8673 ·8665 | ·8667 ·8659 | ·77 | ·01 | ·056 | ·933 | ·306 | ·291 | A55X | A55 X0 |
| 5 | | | | | | | | | | | | | | | |
| 6 | 1 | BAL 010 | 1200 | U 110 | NLJ 10 | 1·1823 1·1815 | 1·1817 1·1809 | 1·0 | ·02 | ·056 | 1·249 | ·350 | ·352 | A36 X | A36 X0 |
| 7 | 1 | BAL012 | 1201 | U 112 | NLJ 12 | 1·2610 1·2602 | 1·2604 1·2596 | 1·0625 | ·02 | ·056 | 1·328 | ·390 | ·392 | A37 X | A37 X0 |
| 8 | | | | | | | | | | | | | | | |
| 9 | 1 | BAL 1/2 | RL 4 | ULS 5 | NLJ 1/2 | 1·3133 1·3126 | 1·3127 1·3120 | 1·125 | ·03 | ·056 | 1·380 | ·381 | ·378 | A38X | A38 X0 |
| 10 | 1 | BAL 5/8 | RL 5 | ULS 7 | NLJ 5/8 | 1·5633 1·5626 | 1·5627 1·5620 | 1·38 | ·03 | ·056 | 1·630 | ·443 | ·440 | A39X | A39 X0 |
| 11 | 1 | BAL 3/4 | RL 6 | ULS 8 | NLJ 3/4 | 1·8758 1·8751 | 1·8752 1·8745 | 1·625 | ·05 | ·056 | 1·942 | ·538 | ·550 | A40X | A40 X0 |
| 12 | 1 | BAL 7/8 | RL 7 | ULS 9 | NLJ 7/8 | 2·0006 1·9999 | 2·0000 1·9993 | 1·75 | ·05 | ·056 | 2·067 | ·538 | ·550 | A20X | A20 X0 |
| 13 | 1 | BAL 1 | RL 8 | ULS 10 | NLJ 1 | 2·2506 2·2499 | 2·25 2·2493 | 2·0 | ·05 | ·056 | 2·337 | ·601 | ·613 | A47X | A47 X0 |
| 14 | | | | | | | | | | | | | | | |
| 15 | 1 | BAL 1 1/4 | RL 10 | ULS 12 | NLJ 1 1/4 | 2·7506 2·7499 | 2·75 2·7493 | 2·375 | ·05 | ·056 | 2·837 | ·663 | ·675 | A41X | A41 X0 |
| 16 | | | | | | | | | | | | | | | |
| 17 | 1 | BAL 1 1/2 | RL 12 | ULS 13 | NLJ 1 1/2 | 3·2503 3·2494 | 3·2497 3·2488 | 2·875 | ·08 | ·056 | 3·337 | ·670 | ·710 | A42X | A42 X0 |
| 18 | | | | | | | | | | | | | | | |
| 19 | 1 | BAL 1 3/4 | RL 14 | ULS 14 | NLJ 1 3/4 | 3·7503 3·7494 | 3·7497 3·7488 | 3·375 | ·08 | ·056 | 3·836 | ·733 | ·773 | A43X | A43 X0 |
| 20 | | | | | | | | | | | | | | | |
| 21 | 1 | BAL 2 | RL 16 | ULS 15 | NLJ 2 | 4·0003 3·9994 | 3·9997 3·9988 | 3·625 | ·08 | ·056 | 4·087 | ·733 | ·773 | A44X | A44 X0 |
| 22 | 1 | BRL 004 | R 4 | 104 | LJ 4 | ·6311 ·6303 | ·6305 ·6297 | ·5 | ·01 | ·056 | ·698 | ·227 | ·212 | A45X | A45X0 |
| 23 | 1 | BRL006 | EL 6 | 106 | LJ 6 | ·7492 ·7484 | ·7486 ·7478 | ·625 | ·01 | ·056 | ·818 | ·266 | ·251 | A25X | A25 X0 |
| 24 | 1 | BRL008 | EL 8 | 108 | LJ 8 | ·8673 ·8665 | ·8667 ·8659 | ·75 | ·01 | ·056 | ·933 | ·305 | ·290 | A35 X | A35 X0 |
| 25 | | | | | | | | | | | | | | | |
| 26 | 1 | BRE 1/4 | EE 2 | S 1 | KLNJ 1/4 | ·7508 ·7501 | ·7502 ·7495 | ·625 | ·01 | ·056 | ·818 | ·247 | ·233 | A25X | A25 X0 |
| 27 | 1 | BRE 3/8 | EE 3 | S 3 | KLNJ 3/8 | ·8758 ·8751 | ·8752 ·8745 | ·75 | ·01 | ·056 | ·942 | ·247 | ·233 | A26 X | A26 X0 |
| 28 | 1 | BRE 1/2 | EE 4 | S 5 | KLNJ 1/2 | 1·1258 1·1251 | 1·1252 1·1245 | 1·0 | ·01 | ·056 | 1·192 | ·278 | ·264 | A27 X | A27 X0 |
| 29 | | | | | | | | | | | | | | | |
| 30 | 1 | BRE 3/4 | EE 6 | S 8 | KLNJ 3/4 | 1·6258 1·6251 | 1·6252 1·6245 | 1·4375 | ·03 | ·056 | 1·692 | ·318 | ·315 | A46X | A46 X0 |
| 31 | | | | | | | | | | | | | | | |
| 32 | | | | | | | | | | | | | | | |
| 33 | 1 | BRE 1 | EE 9 | S10 | KLNJ 1 | 2·0006 1·9999 | 2·0000 1·9993 | 1·75 | ·03 | ·056 | 2·067 | ·381 | 378 | A20X | A20 X0 |
| 34 | | | | | | | | | | | | | | | |

| ISSUE No. | DATE |
|---|---|
| 2 | 22-1-58 |
| 3 | S.952 |
| | |
| | |
| | |

1. MESSRS. WALKER & SCHOFIELD LTD. RETAINING RINGS ARE SUITABLE FOR USE WHERE INCIDENTAL SIDE LOADS UP TO 100 LBS. OCCUR. WHERE HEAVIER SIDE LOADS ARE INVOLVED, OTHER METHODS OF FIXING (e.g. BALL RACE RETAINING PLATE) MUST BE USED.
2. THE METHOD OF RETAINING THE BALL RACE BY A RING ON EACH SIDE MUST BE USED WHEREVER POSSIBLE.
3. "DIA. Eb. BEFORE CADMIUM PLATING" APPLIES ONLY TO STEEL COMPONENTS WHERE CADMIUM PLATING IS SPECIFICALLY CALLED FOR.

METHOD OF CALLING UP RETAINING RINGS

DRAWING MUST SHOW TYPE OF HOUSING REQUIRED i.e. DOUBLE GROOVE OR SINGLE GROOVE.

EXAMPLE. WHEN USING BALL RACE PART Nº B.A.L.2 THE DRAWING WILL CALL UP "BORE AND GROOVE TO D.H.S.575/21 DOUBLE GROOVE" OR SINGLE GROOVE AS APPLICABLE.

NOTE :- DRAWINGS WILL NOT QUOTE HOUSING OR GROOVE DIMENSIONS BUT THE PART NUMBER OF THE "STANDARD" W & S RETAINING RING MUST BE CALLED UP ON THE SAME DRAWING AS THE BALL RACE. SEE ALSO D.H.S. 578

| | |
|---|---|
| COMPILED | L. SPENCER |
| TRACED | F.H.H. |
| APPROVED | T. YOUNG. |

# BALL RACE RETAINING RINGS.

DRAWING OFFICE DATA SHEET Nº 1/13 A.

THE DE HAVILLAND AIRCRAFT COMPANY LTD. HATFIELD. HERTS.

# D.H.S. 575

SHEET Nº 1 | Nº OF SHEETS 2

## PREFERRED METHOD

FITTING WITH BALL RACE RETAINED BY A RING ON EACH SIDE.

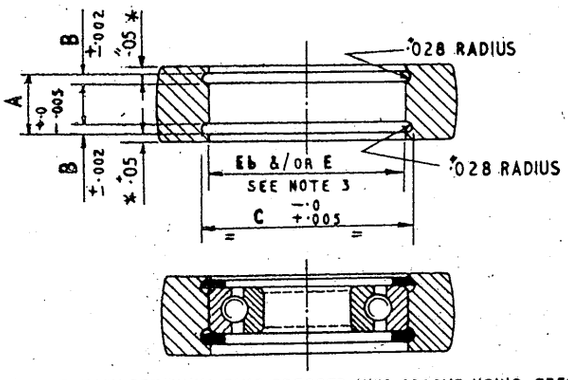


FITTING WITH BALL RACE RETAINED BY AN ABUTMENT & ONE RETAINING RING

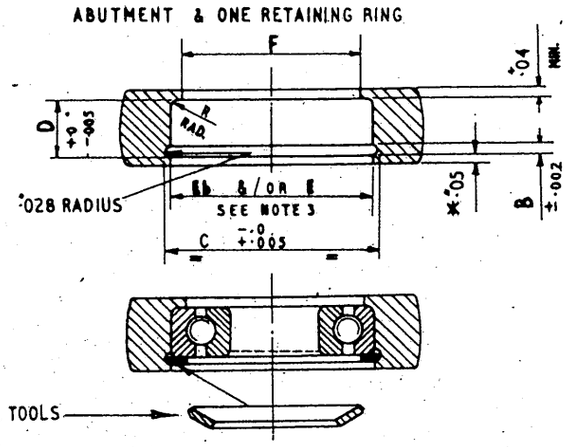


LIGHT ALLOY RETAINING RING PRESSED INTO GROOVE USING SPECIAL TOOLS →

* THICKNESS DIM ·05 IS A RECOMMENDED MINIMUM BUT MAY BE VARIED TO SUIT THE MATERIAL BEING USED.

| MARK Nº | ISSUE NUMBER | BALL BEARING MANUFACTURERS CODE B.S. | S.K.F. | HOFFMAN | R & M | BORE DIA. Eb (BEFORE CADMIUM) | FINAL BORE DIA E (STEEL & LIGHT ALLOY) | ABUTMENT DIA F | RADIUS R | RETAINING RING GROOVE WIDTH B | DIA. C | WIDTH A | WIDTH D | W & S RETAINING RING PART Nº STANDARD | OVERSIZE |
|---|---|---|---|---|---|---|---|---|---|---|---|---|---|---|---|
| 1 | 1 | BAL005 | 13300 | U 105 | NLJ 5 | ·7492 ·7484 | ·7486 ·7478 | ·625 | ·01 | ·056 | ·818 | ·266 | ·251 | A25 X | A25 X0 |
| 2 | 1 | BAL006 | 13301 | U 106 | NLJ 6 | ·7492 ·7484 | ·7486 ·7478 | ·625 | ·01 | ·056 | ·818 | ·266 | ·251 | A25 X | A25 X0 |
| 3 | | | | | | | | | | | | | | | |
| 4 | 1 | BAL008 | 13303 | U 108 | NLJ 8 | ·8673 ·8665 | ·8667 ·8659 | ·77 | ·01 | ·056 | ·933 | ·306 | ·291 | A55X | A55 X0 |
| 5 | | | | | | | | | | | | | | | |
| 6 | 1 | BAL 010 | 1200 | U 110 | NLJ 10 | 1·1823 1·1815 | 1·1817 1·1809 | 1·0 | ·02 | ·056 | 1·249 | ·350 | ·352 | A36 X | A36 X0 |
| 7 | 1 | BAL012 | 1201 | U 112 | NLJ 12 | 1·2610 1·2602 | 1·2604 1·2596 | 1·0625 | ·02 | ·056 | 1·328 | ·390 | ·392 | A37 X | A37 X0 |
| 8 | | | | | | | | | | | | | | | |
| 9 | 1 | BAL 1/2 | RL 4 | ULS 5 | NLJ 1/2 | 1·3133 1·3126 | 1·3127 1·3120 | 1·125 | ·03 | ·056 | 1·380 | ·381 | ·378 | A38X | A38 X0 |
| 10 | 1 | BAL 5/8 | RL 5 | ULS 7 | NLJ 5/8 | 1·5633 1·5626 | 1·5627 1·5620 | 1·38 | ·03 | ·056 | 1·630 | ·443 | ·440 | A39X | A39 X0 |
| 11 | 1 | BAL 3/4 | RL 6 | ULS 8 | NLJ 3/4 | 1·8758 1·8751 | 1·8752 1·8745 | 1·625 | ·05 | ·056 | 1·942 | ·538 | ·550 | A40X | A40 X0 |
| 12 | 1 | BAL 7/8 | RL 7 | ULS 9 | NLJ 7/8 | 2·0006 1·9999 | 2·0000 1·9993 | 1·75 | ·05 | ·056 | 2·067 | ·538 | ·550 | A20X | A20 X0 |
| 13 | 1 | BAL 1 | RL 8 | ULS 10 | NLJ 1 | 2·2506 2·2499 | 2·25 2·2493 | 2·0 | ·05 | ·056 | 2·337 | ·601 | ·613 | A47X | A47 X0 |
| 14 | | | | | | | | | | | | | | | |
| 15 | 1 | BAL 1 1/4 | RL 10 | ULS 12 | NLJ 1 1/4 | 2·7506 2·7499 | 2·75 2·7493 | 2·375 | ·05 | ·056 | 2·837 | ·663 | ·675 | A41X | A41 X0 |
| 16 | | | | | | | | | | | | | | | |
| 17 | 1 | BAL 1 1/2 | RL 12 | ULS 13 | NLJ 1 1/2 | 3·2503 3·2494 | 3·2497 3·2488 | 2·875 | ·08 | ·056 | 3·337 | ·670 | ·710 | A42X | A42 X0 |
| 18 | | | | | | | | | | | | | | | |
| 19 | 1 | BAL 1 3/4 | RL 14 | ULS 14 | NLJ 1 3/4 | 3·7503 3·7494 | 3·7497 3·7488 | 3·375 | ·08 | ·056 | 3·836 | ·733 | ·773 | A43X | A43 X0 |
| 20 | | | | | | | | | | | | | | | |
| 21 | 1 | BAL 2 | RL 16 | ULS 15 | NLJ 2 | 4·0003 3·9994 | 3·9997 3·9988 | 3·625 | ·08 | ·056 | 4·087 | ·733 | ·773 | A44X | A44 X0 |
| 22 | 1 | BRL 004 | R 4 | 104 | LJ 4 | ·6311 ·6303 | ·6305 ·6297 | ·5 | ·01 | ·056 | ·698 | ·227 | ·212 | A45X | A45X0 |
| 23 | 1 | BRL006 | EL 6 | 106 | LJ 6 | ·7492 ·7484 | ·7486 ·7478 | ·625 | ·01 | ·056 | ·818 | ·266 | ·251 | A25X | A25 X0 |
| 24 | 1 | BRL008 | EL 8 | 108 | LJ 8 | ·8673 ·8665 | ·8667 ·8659 | ·75 | ·01 | ·056 | ·933 | ·305 | ·290 | A35 X | A35 X0 |
| 25 | | | | | | | | | | | | | | | |
| 26 | 1 | BRE 1/4 | EE 2 | S 1 | KLNJ 1/4 | ·7508 ·7501 | ·7502 ·7495 | ·625 | ·01 | ·056 | ·818 | ·247 | ·233 | A25X | A25 X0 |
| 27 | 1 | BRE 3/8 | EE 3 | S 3 | KLNJ 3/8 | ·8758 ·8751 | ·8752 ·8745 | ·75 | ·01 | ·056 | ·942 | ·247 | ·233 | A26 X | A26 X0 |
| 28 | 1 | BRE 1/2 | EE 4 | S 5 | KLNJ 1/2 | 1·1258 1·1251 | 1·1252 1·1245 | 1·0 | ·01 | ·056 | 1·192 | ·278 | ·264 | A27 X | A27 X0 |
| 29 | | | | | | | | | | | | | | | |
| 30 | 1 | BRE 3/4 | EE 6 | S 8 | KLNJ 3/4 | 1·6258 1·6251 | 1·6252 1·6245 | 1·4375 | ·03 | ·056 | 1·692 | ·318 | ·315 | A46X | A46 X0 |
| 31 | | | | | | | | | | | | | | | |
| 32 | | | | | | | | | | | | | | | |
| 33 | 1 | BRE 1 | EE 9 | S10 | KLNJ 1 | 2·0006 1·9999 | 2·0000 1·9993 | 1·75 | ·03 | ·056 | 2·067 | ·381 | 378 | A20X | A20 X0 |
| 34 | | | | | | | | | | | | | | | |

1. MESSRS. WALKER & SCHOFIELD LTD. RETAINING RINGS ARE SUITABLE FOR USE WHERE INCIDENTAL SIDE LOADS UP TO 100 LBS. OCCUR. WHERE HEAVIER SIDE LOADS ARE INVOLVED, OTHER METHODS OF FIXING (e.g. BALL RACE RETAINING PLATE) MUST BE USED.
2. THE METHOD OF RETAINING THE BALL RACE BY A RING ON EACH SIDE MUST BE USED WHEREVER POSSIBLE.
3. "DIA. Eb. BEFORE CADMIUM PLATING" APPLIES ONLY TO STEEL COMPONENTS WHERE CADMIUM PLATING IS SPECIFICALLY CALLED FOR.

METHOD OF CALLING UP RETAINING RINGS

DRAWING MUST SHOW TYPE OF HOUSING REQUIRED i.e. DOUBLE GROOVE OR SINGLE GROOVE.

EXAMPLE. WHEN USING BALL RACE PART Nº B.A.L.2 THE DRAWING WILL CALL UP "BORE AND GROOVE TO D.H.S.575/21 DOUBLE GROOVE" OR SINGLE GROOVE AS APPLICABLE.

NOTE :- DRAWINGS WILL NOT QUOTE HOUSING OR GROOVE DIMENSIONS BUT THE PART NUMBER OF THE "STANDARD" W & S RETAINING RING MUST BE CALLED UP ON THE SAME DRAWING AS THE BALL RACE. SEE ALSO D.H.S. 578

| ISSUE No. | DATE |
|---|---|
| 2 | 22-1-58 |
| 3 | S.952 |
| | |
| | |
| | |

| | |
|---|---|
| COMPILED | L. SPENCER |
| TRACED | F.H.H. |
| APPROVED | T. YOUNG. |

# BALL RACE RETAINING RINGS.

DRAWING OFFICE DATA SHEET Nº 1/13 A.

THE DE HAVILLAND AIRCRAFT COMPANY LTD. HATFIELD HERTS

# D.H.S. 576

SHEET No. 1 | No. OF SHTS 1

## PREFERRED METHOD

### FITTING WITH SELF-ALIGNING JOINT RETAINED BY A RING ON EACH SIDE

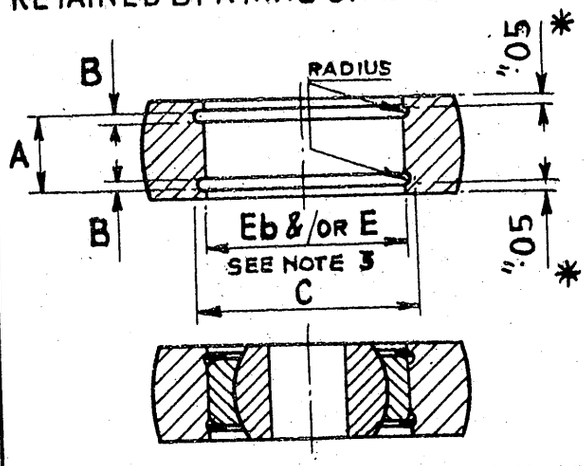


### FITTING WITH SELF-ALIGNING JOINT RETAINED BY AN ABUTMENT & ONE RING

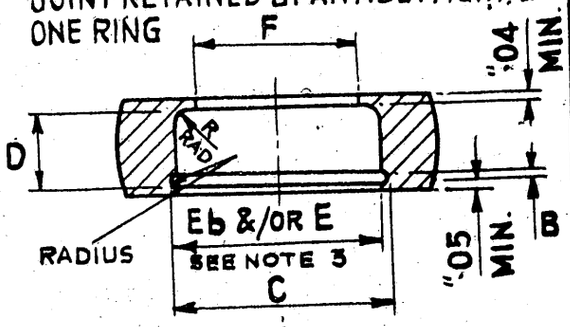


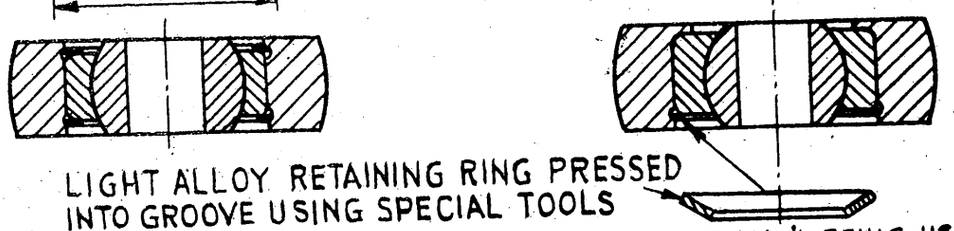

LIGHT ALLOY RETAINING RING PRESSED INTO GROOVE USING SPECIAL TOOLS

* THICKNESS DIM. ·05 IS THE RECOMMENDED MIN. BUT MAY BE VARIED TO SUIT MAT'L BEING USED.

| MARK No. | ISSUE No. | TYPE OF BEARING | MAKERS CODE: HOFFMANN | MAKERS CODE: ROSE BROS. | W&S RETAINING RING PART No: STANDARD | W&S RETAINING RING PART No: OVER SIZE | BORE DIA. Eb (BEFORE CADMIUM) | FINAL BORE DIA. E (STEEL & L.A.) | ABUTMENT DIA. F | RADIUS R | RET. RING GROOVE: WIDTH B ±·002 | RET. RING GROOVE: DIA. C ∓·005 | WIDTH A +0 −·005 | WIDTH D +0 −·005 |
|---|---|---|---|---|---|---|---|---|---|---|---|---|---|---|
| 1 | 1 | SELF-ALIGNING SPHERICAL BEARING | CJ 0 | RBJ 200 | A52 X | A52X0 | ·5626 ·5633 | ·5620 ·5627 | ·47 | ·01 | ·056 | ·626 | ·184 | ·170 |
| 2 | 1 | | CJ 1 | RBJ 201 | A52 X | A52X0 | ·5626 ·5633 | ·5620 ·5627 | ·47 | ·01 | ·056 | ·626 | ·184 | ·170 |
| 3 | 1 | | CJ 2 | RBJ 202 | A24 X | A24X0 | ·6251 ·6258 | ·6245 ·6252 | ·53 | ·01 | ·056 | ·688 | ·215 | ·201 |
| 4 | 1 | | CJ 3 | RBJ 203 | A25 X | A25X0 | ·7501 ·7508 | ·7495 ·7502 | ·65 | ·01 | ·056 | ·813 | ·247 | ·233 |
| 5 | 1 | | CJ 5 | RBJ 205 | A50 X | A50X0 | ·9376 ·9383 | ·9370 ·9377 | ·84 | ·01 | ·056 | 1·00 | ·340 | ·326 |
| 6 | 1 | | CJ 7 | RBJ 207 | A27 X | A27X0 | 1·1251 1·1258 | 1·1245 1·1252 | 1·03 | ·01 | ·056 | 1·187 | ·372 | ·358 |
| 7 | 1 | | CJ 8 | RBJ 208 | A38 X | A38X0 | 1·3126 1·3133 | 1·3120 1·3127 | 1·12 | ·03 | ·056 | 1·375 | ·381 | ·378 |
| 8 | 1 | | CJ 10 | RBJ 210 | A39 X | A39X0 | 1·5626 1·5633 | 1·5620 1·5627 | 1·37 | ·03 | ·056 | 1·626 | ·443 | ·440 |
| 10 | 1 | ROSE BROS. HEIM UNIBAL SPHERICAL BEARING | | RS-2/S | A51 X | A51X0 | ·5561 ·5568 | ·5555 ·5562 | ·46 | ·01 | ·056 | ·619 | ·239 | ·229 |
| 11 | 1 | | | RS-3 | A24 X | A24X0 | ·6251 ·6258 | ·6245 ·6252 | ·53 | ·01 | ·056 | ·688 | ·207 | ·197 |
| 12 | 1 | | | RS-4 | A25 X | A25X0 | ·7501 ·7508 | ·7495 ·7502 | ·65 | ·01 | ·056 | ·813 | ·301 | ·291 |
| 13 | 1 | | | RS-5 | A26 X | A26X0 | ·8751 ·8758 | ·8745 ·8752 | ·78 | ·01 | ·056 | ·938 | ·333 | ·323 |
| 14 | 1 | | | RS-6 | A48 X | A48X0 | 1·0001 1·0008 | ·9995 1·0002 | ·90 | ·01 | ·056 | 1·063 | ·395 | ·385 |
| 15 | 1 | | | RS-7 | A36 X | A36X0 | 1·1876 1·1883 | 1·1870 1·1877 | 1·0 | ·03 | ·056 | 1·25 | ·412 | ·425 |
| 16 | 1 | | | RS-8 | A38 X | A38X0 | 1·3126 1·3133 | 1·3120 1·3127 | 1·05 | ·03 | ·056 | 1·375 | ·491 | ·511 |
| 17 | 1 | | | RS-10 | A39 X | A39X0 | 1·5626 1·5633 | 1·5620 1·5627 | 1·3 | ·03 | ·056 | 1·625 | ·647 | ·667 |
| 18 | 1 | | | RS-12 | A21 X | A21X0 | 2·2501 2·2508 | 2·2495 2·2502 | 2·0 | ·03 | ·056 | 2·312 | ·897 | ·917 |
| 19 | 1 | | | RS-16 | A49 X | A49X0 | 2·3751 2·3758 | 2·3745 2·3752 | 2·13 | ·03 | ·056 | 2·438 | ·797 | ·836 |

| ISSUE No. | DATE |
|---|---|
| 1 | |
| 2 | 22/1/58 |
| 3 | S.952 |

COMPILED T. EVANS
TRACED D.P.
APPROVED T. YOUNG

## NOTES.

1. MESSRS WALKER & SCHOFIELD LTD. RETAINING RINGS ARE SUITABLE FOR USE WHERE INCIDENTAL SIDE LOADS UP TO 100 lbs. OCCUR. WHERE HEAVIER SIDE LOADS ARE INVOLVED, OTHER METHODS OF FIXING e.g. BALL RACE RETAINING PLATE, MUST BE USED.
2. WHEREVER POSSIBLE SELF-ALIGNING JOINTS MUST BE RETAINED BY A RING ON EACH SIDE.
3. DIA. Eb BEFORE CAD. PLATING APPLIES ONLY TO STEEL COMPONENTS WHERE CAD. PLATING IS SPECIFICALLY CALLED FOR.

METHOD OF CALLING UP DRAWING MUST SHOW TYPE OF S/A JOINT HOUSING REQUIRED.

EXAMPLE WHEN USING JOINT No. CJ8 DRAWING WILL CALL UP 'BORE AND GROOVE TO DHS 576/7 DOUBLE GROOVE' OR SINGLE GROOVE AS APPLICABLE

DRAWINGS WILL NOT QUOTE HOUSING OR GROOVE DIMENSIONS, BUT THE PART No. OF THE "STANDARD" W&S RETAINING RING MUST BE CALLED UP WITH THE SELF-ALIGNING JOINT. SEE ALSO D.H.S. 578.

SELF ALIGNING JOINT RETAINING RINGS

DRAWING OFFICE DATA SHEET No. 1

# THE DE HAVILLAND AIRCRAFT COMPANY LTD, HATFIELD, HERTS.

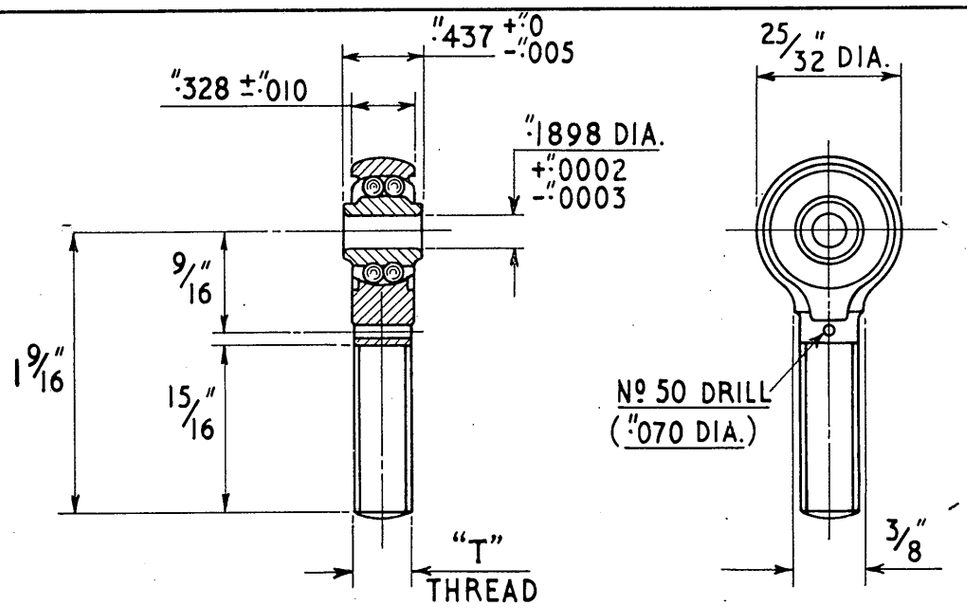


| PART NUMBER | THREAD "T" |
|---|---|
| HOFFMAN CM 2 B | 5/16 B.S.F. RIGHT HAND |
| HOFFMAN CM 2 LB | 5/16 B.S.F. LEFT HAND |

MAX. PERMISSIBLE OUT OF ALIGNMENT 10°

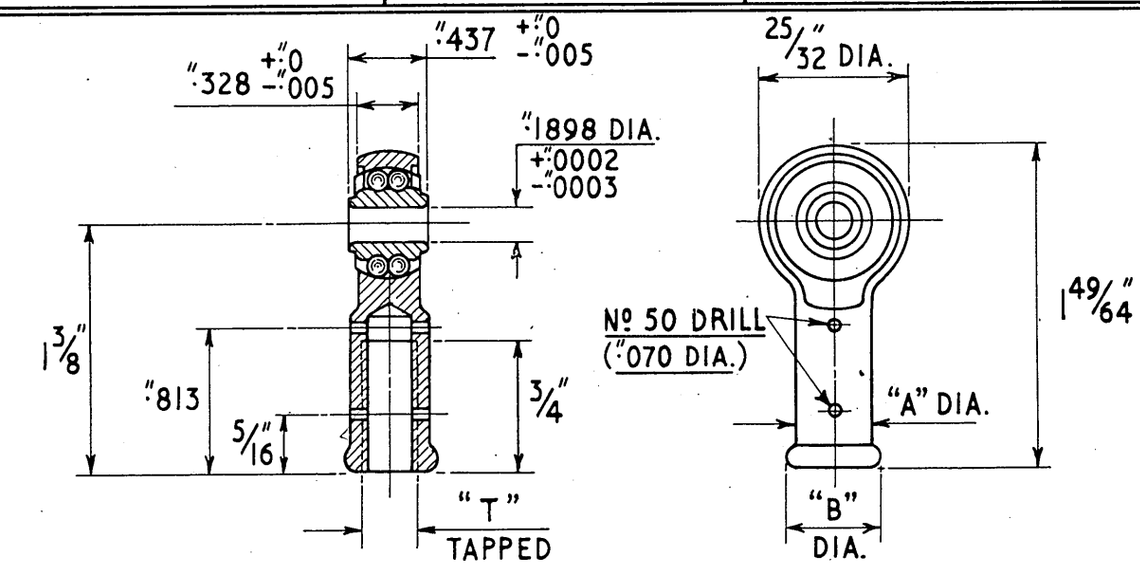


| PART NUMBER | THREAD "T" | DIA. "A" | DIA. "B" |
|---|---|---|---|
| HOFFMAN CF 2 A | 5/16 B.S.F. RIGHT HAND | 7/16 | 1/2 |
| HOFFMAN CF 2 LA | 5/16 B.S.F. LEFT HAND | 7/16 | 1/2 |
| RANSOM & MARLES. CM 3/16 B | 3/8 B.S.F. RIGHT HAND | 1/2 | 9/16 |
| RANSOM & MARLES. CM 3/16 BL | 3/8 B.S.F. LEFT HAND | 1/2 | 9/16 |

MAX. PERMISSIBLE OUT OF ALIGNMENT 10°

| ISSUE Nº | DATE |
|---|---|
| 1 | MAY '51 |

DRAWN
L. SPENCER.
TRACED
DOLTON DRAWING Co. 22 · 5 · 1951.
APPROVED

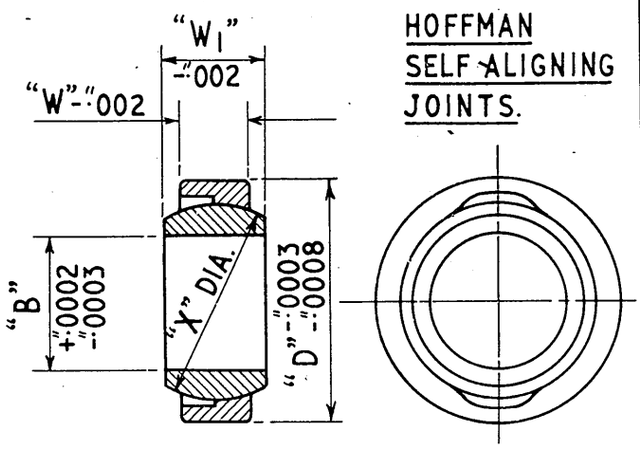


HOFFMAN SELF-ALIGNING JOINTS.

| PART NUMBER | BORE "B" | DIA. "D" | "W" | "W1" | SPHERE DIA. "X" |
|---|---|---|---|---|---|
| CJ.0 | ·1898 | 9/16 | 5/32 | 7/32 | ·4063 |
| CJ.1 | 1/4 | 9/16 | 5/32 | 7/32 | ·4063 |
| CJ.2 | 5/16 | 5/8 | 3/16 | 1/4 | ·4688 |
| CJ.3 | 3/8 | 3/4 | 7/32 | 5/16 | ·63 |
| CJ.5 | 1/2 | 15/16 | 5/16 | 7/16 | ·75 |
| CJ.7 | 5/8 | 1 1/8 | 11/32 | 1/2 | ·9063 |

## ROD END BEARINGS - SELF ALIGNING JOINT.

DRAWING OFFICE DATA SHEET Nº 1/13 B

# THE DE HAVILLAND AIRCRAFT COMPANY LTD., HATFIELD. HERTS.

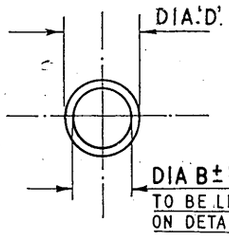


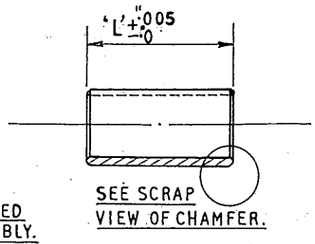


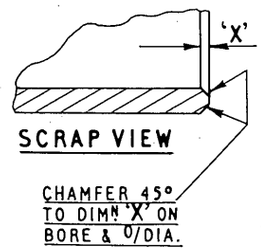


**DETAIL OF TYPICAL SUB-ASSEMBLY.**

DHS 418/2/E N/312 — BUSH. 2 OFF.

TO BE LINE REAMED ON ASSEMBLY 1/2" ± ·0003

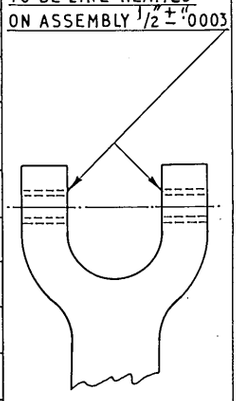

| IDENTN LETTER | BORE NOMINAL | BORE DIA. 'B' ± ·0005 | D.H.S.418/1 1/32" WALL THICKNESS DIM. 'X' ·015 DIA. 'D' BEFORE CADMIUM | D.H.S.418/1 DIA. 'D' AFTER CADMIUM | D.H.S.418/2 1/16" WALL THICKNESS DIM. 'X' ·02 DIA. 'D' BEFORE CADMIUM | D.H.S.418/2 DIA. 'D' AFTER CADMIUM | D.H.S.418/3 3/32" WALL THICKNESS DIM. 'X' ·02 DIA. 'D' BEFORE CADMIUM | D.H.S.418/3 DIA. 'D' AFTER CADMIUM | D.H.S.418/4 1/8" WALL THICKNESS DIM. 'X' ·03 DIA. 'D' BEFORE CADMIUM | D.H.S.418/4 DIA. 'D' AFTER CADMIUM |
|---|---|---|---|---|---|---|---|---|---|---|
| C | 3/16" | ·1845 | ·2497<br>·2500 | ·2503<br>·2506 | ·3123<br>·3127 | ·3129<br>·3133 | | | | |
| E | 1/4" | ·247 | ·3123<br>·3127 | ·3129<br>·3133 | ·3748<br>·3752 | ·3754<br>·3758 | | | | |
| G | 5/16" | ·3095 | ·3748<br>·3752 | ·3754<br>·3758 | ·4373<br>·4377 | ·4379<br>·4383 | | | | |
| J | 3/8" | ·372 | ·4373<br>·4377 | ·4379<br>·4383 | ·4998<br>·5002 | ·5004<br>·5008 | ·5623<br>·5627 | ·5629<br>·5633 | | |
| L | 7/16" | ·4345 | ·4998<br>·5002 | ·5004<br>·5008 | ·5623<br>·5627 | ·5629<br>·5633 | ·6249<br>·6254 | ·6255<br>·6260 | | |
| N | 1/2" | ·497 | ·5623<br>·5627 | ·5629<br>·5633 | ·6249<br>·6254 | ·6255<br>·6260 | ·6874<br>·6879 | ·6880<br>·6885 | ·7499<br>·7504 | ·7505<br>·7510 |
| P | 9/16" | ·5595 | | | ·6874<br>·6879 | ·6880<br>·6885 | ·7499<br>·7504 | ·7505<br>·7510 | ·8124<br>·8129 | ·8130<br>·8135 |
| Q | 5/8" | ·622 | | | ·7499<br>·7504 | ·7505<br>·7510 | ·8124<br>·8129 | ·8130<br>·8135 | ·8749<br>·8754 | ·8755<br>·8760 |
| S | 3/4" | ·747 | | | ·8749<br>·8754 | ·8755<br>·8760 | ·9374<br>·9379 | ·9380<br>·9385 | 1·0000<br>1·0006 | 1·0006<br>1·0012 |
| U | 7/8" | ·872 | | | 1·0000<br>1·0006 | 1·0006<br>1·0012 | 1·0625<br>1·0631 | 1·0631<br>1·0637 | 1·1250<br>1·1256 | 1·1256<br>1·1262 |
| W | 1" | ·997 | | | 1·1250<br>1·1256 | 1·1256<br>1·1262 | 1·1875<br>1·1881 | 1·1881<br>1·1887 | 1·2500<br>1·2506 | 1·2506<br>1·2512 |

| | |
|---|---|
| MATERIAL | BRONZE |
| SPECIFCN | DTD. 197 |
| FINISH | CADMIUM (BORE MAY BE EXCEPTED) |

**BORE – DIA. 'B'.** IS THE NOMINAL 1/DIA. – ·003 ± ·0005 FOR BUSHES UP TO AND INCLUDING 1" 1/DIA. SIMILARLY FOR BUSHES GREATER THAN 1" 1/D UP TO AND INCLUDING 2" 1/D. **DIA. 'B'** IS THE NOMINAL 1/D – ·005 ± ·0007. BUSHES ARE TO BE LINE REAMED ON ASSEMBLY TO PROVIDE A B.S. 164 BILATERAL 'X' HOLE. THIS MUST BE QUOTED ON DRAWING.

**O/DIA. 'D'.** IS A LIGHT DRIVE 'D' FIT IN AN 'X' HOLE TO BE PROVIDED IN THE COMPONENT.

**METHOD OF CALLING UP**

A PLAIN BUSH WITH 1/16" WALLS AND 1/2" BORE X ·312 LONG WILL BE:–

| DHS.418/2 | N | ·312 |
|---|---|---|
| DHS. PART Nº & SUFFIX FOR WALL THICKNESS IN 1/32. | IDENTIFICATION LETTER FOR BORE DIAMETER | LENGTH 'L' ACTUAL LENGTH IN INCHES |

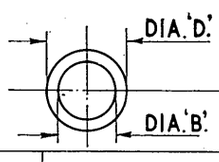


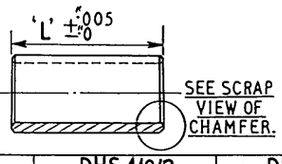


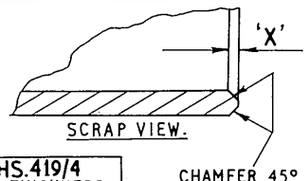


CHAMFER 45° TO DIMN 'X' ON BORE & O/DIA.

| IDENTN LETTER | BORE DIA. 'B'. | DHS.419/1 1/32" WALL THICKNESS DIM. 'X' ·015 DIA. 'D' BEFORE CADMIUM | DHS.419/1 DIA. 'D' AFTER CADMIUM | DHS.419/2 1/16" WALL THICKNESS DIM. 'X' ·02 DIA. 'D' BEFORE CADMIUM | DHS.419/2 DIA. 'D' AFTER CADMIUM | DHS.419/3 3/32" WALL THICKNESS DIM. 'X' ·02 DIA. 'D' BEFORE CADMIUM | DHS.419/3 DIA. 'D' AFTER CADMIUM | DHS.419/4 1/8" WALL THICKNESS DIM. 'X' ·03 DIA. 'D' BEFORE CADMIUM | DHS.419/4 DIA. 'D' AFTER CADMIUM |
|---|---|---|---|---|---|---|---|---|---|
| C | 3/16" ± ·0003 | ·2497<br>·2500 | ·2503<br>·2506 | ·3123<br>·3127 | ·3129<br>·3133 | | | | |
| E | 1/4" ± ·0003 | ·3123<br>·3127 | ·3129<br>·3133 | ·3748<br>·3752 | ·3754<br>·3758 | | | | |
| G | 5/16" ± ·0004 | ·3748<br>·3752 | ·3754<br>·3758 | ·4373<br>·4377 | ·4379<br>·4383 | | | | |
| J | 3/8" ± ·0004 | ·4373<br>·4377 | ·4379<br>·4383 | ·4998<br>·5002 | ·5004<br>·5008 | ·5623<br>·5627 | ·5629<br>·5633 | | |
| L | 7/16" ± ·0004 | ·4998<br>·5002 | ·5004<br>·5008 | ·5623<br>·5627 | ·5629<br>·5633 | ·6249<br>·6254 | ·6255<br>·6260 | | |
| N | 1/2" ± ·0004 | ·5623<br>·5627 | ·5629<br>·5633 | ·6249<br>·6254 | ·6255<br>·6260 | ·6874<br>·6879 | ·6880<br>·6885 | ·7499<br>·7504 | ·7505<br>·7510 |
| P | 9/16" ± ·0004 | ·6249<br>·6254 | ·6255<br>·6260 | ·6874<br>·6879 | ·6880<br>·6885 | ·7499<br>·7504 | ·7505<br>·7510 | ·8124<br>·8129 | ·8130<br>·8135 |
| Q | 5/8" ± ·0005 | ·6874<br>·6879 | ·6880<br>·6885 | ·7499<br>·7504 | ·7505<br>·7510 | ·8124<br>·8129 | ·8130<br>·8135 | ·8749<br>·8754 | ·8755<br>·8760 |
| S | 3/4" ± ·0005 | ·8124<br>·8129 | ·8130<br>·8135 | ·8749<br>·8754 | ·8755<br>·8760 | ·9374<br>·9379 | ·9380<br>·9385 | 1·0000<br>1·0006 | 1·0006<br>1·0012 |
| U | 7/8" ± ·0005 | | | 1·0000<br>1·0006 | 1·0006<br>1·0012 | 1·0625<br>1·0631 | 1·0631<br>1·0637 | 1·1250<br>1·1256 | 1·1256<br>1·1262 |
| W | 1" ± ·0006 | | | 1·1250<br>1·1256 | 1·1256<br>1·1262 | 1·1875<br>1·1881 | 1·1881<br>1·1887 | 1·2500<br>1·2506 | 1·2506<br>1·2512 |

| | |
|---|---|
| MATERIAL | BRONZE |
| SPECIFCN | DTD. 197 |
| FINISH | CADMIUM (BORE TO HAVE NO TREATMENT) |

**BORE – DIA. 'B'.** IS FINISHED SIZE TO PROVIDE A B.S.164 BILATERAL 'X' HOLE BUT MAY BE LIGHTLY REAMED IF SHRINKAGE OCCURS ON ASSY.

**O/DIA. 'D'.** IS A LIGHT DRIVE 'D' FIT IN AN 'X' HOLE TO BE PROVIDED IN THE COMPONENT.

**METHOD OF CALLING UP**

A PLAIN BUSH WITH 1/16" THICK WALLS AND 1/2" BORE X ·312 LONG WILL BE:–

| D.H.S.419/2 | N | ·312 |
|---|---|---|
| DHS. PART Nº & SUFFIX FOR WALL THICKNESS IN 1/32". | IDENTIFICATION LETTER FOR BORE DIAMETER. | LENGTH 'L' ACTUAL LENGTH IN INCHES |

| ISSUE Nº | DATE |
|---|---|
| 1 | MAR. '55 |
| 2 | JULY '56 |

DRAWN: T. EVANS.

TRACED: D.P.

APPROVED

# D.H.S. BUSHES – PLAIN & LINE REAMED

DRAWING OFFICE DATA SHEET Nº 1/13C

| END ASSEMBLIES → ↓ | SIZE OF CHAIN | TYPE OF CHAIN | CONNECTORS R.H. THD | CONNECTORS L.H. THD | CABLE SPOOLS FOR CABLES WITH BREAKING STRAIN AS BELOW — ALTERNATIVE END FITTINGS TO PREVENT CROSSING CABLES: 5 CWT. | 5 CWT. | 10 CWT. | 10 CWT. | 15 CWT. | 15 CWT. | 20 CWT. | 20 CWT. | 25 CWT. | 25 CWT. | 35 CWT. | 35 CWT. | PLAIN END WITH OUTER LINK: WITH ROLLER | PLAIN END WITH OUTER LINK: WITHOUT ROLLER | PLAIN END WITH INNER LINK: WITH ROLLER | PLAIN END WITH INNER LINK: WITHOUT ROLLER |
|---|---|---|---|---|---|---|---|---|---|---|---|---|---|---|---|---|---|---|---|---|
| R.H. THREAD. | B.S.1. CHAIN 8 M/M PITCH | SINGLE | AS.200 | AS.201 | AS.202 | AS.203 | | | | | | | | | | | AS.900 | | AS.901 | |
| | | DOUBLE | AS.267 | AS.268 | AS.269 | AS.270 | | | | | | | | | | | AS.981 | | AS.982 | |
| | | TREBLE | AS.334 | AS.335 | AS.336 | AS.337 | | | | | | | | | | | AS.1062 | | AS.1063 | |
| | B.S.2. CHAIN 3/8" PITCH | SINGLE | AS.210 | AS.211 | | | AS.212 | AS.214 | AS.213 | AS.215 | | | | | | | AS.911 | | AS.912 | |
| | | DOUBLE | AS.277 | AS.278 | | | AS.279 | AS.281 | AS.280 | AS.282 | | | | | | | AS.992 | | AS.993 | |
| | | TREBLE | AS.344 | AS.345 | | | AS.346 | AS.348 | AS.347 | AS.349 | | | | | | | AS.1073 | | AS.1074 | |
| | B.S.4. CHAIN 1/2" PITCH | SINGLE | AS.231 | AS.232 | | | | | AS.233 | AS.235 | AS.234 | AS.926 | | | | | AS.927 | | AS.928 | |
| | | DOUBLE | AS.298 | AS.299 | | | | | AS.300 | AS.302 | AS.301 | AS.1007 | | | | | AS.1008 | | AS.1009 | |
| | | TREBLE | AS.365 | AS.366 | | | | | AS.367 | AS.369 | AS.368 | AS.1088 | | | | | AS.1089 | | AS.1090 | |
| | B.S.6. CHAIN 1/2" PITCH | SINGLE | AS.246 | AS.247 | | | | | | | | | AS.248 | AS.250 | AS.249 | AS.251 | AS.947 | AS.948 | AS.949 | AS.950 |
| | | DOUBLE | AS.313 | AS.314 | | | | | | | | | AS.315 | AS.317 | AS.316 | AS.318 | AS.1028 | AS.1029 | AS.1030 | AS.1031 |
| | | TREBLE | AS.380 | AS.381 | | | | | | | | | AS.382 | AS.384 | AS.383 | AS.385 | AS.1109 | AS.1110 | AS.1111 | AS.1112 |
| L.H. THREAD. | B.S.1. CHAIN 8 M/M PITCH | SINGLE | | AS.204 | AS.205 | AS.206 | | | | | | | | | | | AS.902 | | AS.903 | |
| | | DOUBLE | | AS.271 | AS.272 | AS.273 | | | | | | | | | | | AS.983 | | AS.984 | |
| | | TREBLE | | AS.338 | AS.339 | AS.340 | | | | | | | | | | | AS.1064 | | AS.1065 | |
| | B.S.2. CHAIN 3/8" PITCH | SINGLE | | AS.216 | | | AS.217 | AS.219 | AS.218 | AS.220 | | | | | | | AS.913 | | AS.914 | |
| | | DOUBLE | | AS.283 | | | AS.284 | AS.286 | AS.285 | AS.287 | | | | | | | AS.994 | | AS.995 | |
| | | TREBLE | | AS.350 | | | AS.351 | AS.353 | AS.352 | AS.354 | | | | | | | AS.1075 | | AS.1076 | |
| | B.S.4. CHAIN 1/2" PITCH | SINGLE | | AS.236 | | | | | AS.237 | AS.239 | AS.238 | AS.929 | | | | | AS.930 | | AS.931 | |
| | | DOUBLE | | AS.303 | | | | | AS.304 | AS.306 | AS.305 | AS.1010 | | | | | AS.1011 | | AS.1012 | |
| | | TREBLE | | AS.370 | | | | | AS.371 | AS.373 | AS.372 | AS.1091 | | | | | AS.1092 | | AS.1093 | |
| | B.S.6. CHAIN 1/2" PITCH | SINGLE | | AS.252 | | | | | | | | | AS.253 | AS.255 | AS.254 | AS.256 | AS.951 | AS.952 | AS.953 | AS.954 |
| | | DOUBLE | | AS.319 | | | | | | | | | AS.320 | AS.322 | AS.321 | AS.323 | AS.1032 | AS.1033 | AS.1034 | AS.1035 |
| | | TREBLE | | AS.386 | | | | | | | | | AS.387 | AS.389 | AS.388 | AS.390 | AS.1113 | AS.1114 | AS.1115 | AS.1116 |
| 5 CWT | B.S.1. CHAIN 8 M/M PITCH | SINGLE | | | AS.207 | AS.208 | | | | | | | | | | | AS.904 | | AS.905 | |
| | | DOUBLE | | | AS.274 | AS.275 | | | | | | | | | | | AS.985 | | AS.986 | |
| | | TREBLE | | | AS.341 | AS.342 | | | | | | | | | | | AS.1066 | | AS.1067 | |
| 5 CWT | B.S.1. CHAIN 8 M/M PITCH | SINGLE | | | | AS.209 | | | | | | | | | | | AS.906 | | AS.907 | |
| | | DOUBLE | | | | AS.276 | | | | | | | | | | | AS.987 | | AS.988 | |
| | | TREBLE | | | | AS.343 | | | | | | | | | | | AS.1068 | | AS.1069 | |
| 10 CWT | B.S.2. CHAIN 3/8" PITCH | SINGLE | | | | | AS.221 | AS.223 | AS.222 | AS.224 | | | | | | | AS.915 | | AS.916 | |
| | | DOUBLE | | | | | AS.288 | AS.290 | AS.289 | AS.291 | | | | | | | AS.996 | | AS.997 | |
| | | TREBLE | | | | | AS.355 | AS.357 | AS.356 | AS.358 | | | | | | | AS.1077 | | AS.1078 | |
| 10 CWT | B.S.2. CHAIN 3/8" PITCH | SINGLE | | | | | | AS.228 | | AS.229 | | | | | | | AS.919 | | AS.920 | |
| | | DOUBLE | | | | | | AS.295 | | AS.296 | | | | | | | AS.1000 | | AS.1001 | |
| | | TREBLE | | | | | | AS.362 | | AS.363 | | | | | | | AS.1081 | | AS.1082 | |
| 15 CWT | B.S.2. CHAIN 3/8" PITCH | SINGLE | | | | | | AS.226 | AS.225 | AS.227 | | | | | | | AS.917 | | AS.918 | |
| | | DOUBLE | | | | | | AS.293 | AS.292 | AS.294 | | | | | | | AS.998 | | AS.999 | |
| | | TREBLE | | | | | | AS.360 | AS.359 | AS.361 | | | | | | | AS.1079 | | AS.1080 | |
| 15 CWT | B.S.2. CHAIN 3/8" PITCH | SINGLE | | | | | | | | AS.230 | | | | | | | AS.921 | | AS.922 | |
| | | DOUBLE | | | | | | | | AS.297 | | | | | | | AS.1002 | | AS.1003 | |
| | | TREBLE | | | | | | | | AS.364 | | | | | | | AS.1083 | | AS.1084 | |
| 15 CWT | B.S.4. CHAIN 1/2" PITCH | SINGLE | | | | | | | AS.240 | AS.242 | AS.241 | AS.932 | | | | | AS.933 | | AS.934 | |
| | | DOUBLE | | | | | | | AS.307 | AS.309 | AS.308 | AS.1013 | | | | | AS.1014 | | AS.1015 | |
| | | TREBLE | | | | | | | AS.374 | AS.376 | AS.375 | AS.1094 | | | | | AS.1095 | | AS.1096 | |
| 15 CWT | B.S.4. CHAIN 1/2" PITCH | SINGLE | | | | | | | | AS.245 | | AS.938 | | | | | AS.939 | | AS.940 | |
| | | DOUBLE | | | | | | | | AS.312 | | AS.1019 | | | | | AS.1020 | | AS.1021 | |
| | | TREBLE | | | | | | | | AS.379 | | AS.1100 | | | | | AS.1101 | | AS.1102 | |
| 20 CWT | B.S.4. CHAIN 1/2" PITCH | SINGLE | | | | | | | | AS.244 | AS.243 | AS.935 | | | | | AS.936 | | AS.937 | |
| | | DOUBLE | | | | | | | | AS.311 | AS.310 | AS.1016 | | | | | AS.1017 | | AS.1018 | |
| | | TREBLE | | | | | | | | AS.378 | AS.377 | AS.1097 | | | | | AS.1098 | | AS.1099 | |
| 20 CWT | B.S.4. CHAIN 1/2" PITCH | SINGLE | | | | | | | | | | AS.941 | | | | | AS.942 | | AS.943 | |
| | | DOUBLE | | | | | | | | | | AS.1022 | | | | | AS.1023 | | AS.1024 | |
| | | TREBLE | | | | | | | | | | AS.1103 | | | | | AS.1104 | | AS.1105 | |
| 25 CWT | B.S.6. CHAIN 1/2" PITCH | SINGLE | | | | | | | | | | | AS.257 | AS.259 | AS.258 | AS.260 | AS.955 | AS.956 | AS.957 | AS.958 |
| | | DOUBLE | | | | | | | | | | | AS.324 | AS.326 | AS.325 | AS.327 | AS.1036 | AS.1037 | AS.1038 | AS.1039 |
| | | TREBLE | | | | | | | | | | | AS.391 | AS.393 | AS.392 | AS.394 | AS.1117 | AS.1118 | AS.1119 | AS.1120 |
| 25 CWT | B.S.6. CHAIN 1/2" PITCH | SINGLE | | | | | | | | | | | | AS.264 | | AS.265 | AS.963 | AS.964 | AS.965 | AS.966 |
| | | DOUBLE | | | | | | | | | | | | AS.331 | | AS.332 | AS.1044 | AS.1045 | AS.1046 | AS.1047 |
| | | TREBLE | | | | | | | | | | | | AS.398 | | AS.399 | AS.1125 | AS.1126 | AS.1127 | AS.1128 |
| 35 CWT | B.S.6. CHAIN 1/2" PITCH | SINGLE | | | | | | | | | | | | AS.262 | AS.261 | AS.263 | AS.959 | AS.960 | AS.961 | AS.962 |
| | | DOUBLE | | | | | | | | | | | | AS.329 | AS.328 | AS.330 | AS.1040 | AS.1041 | AS.1042 | AS.1043 |
| | | TREBLE | | | | | | | | | | | | AS.396 | AS.395 | AS.397 | AS.1121 | AS.1122 | AS.1123 | AS.1124 |
| 35 CWT | B.S.6. CHAIN 1/2" PITCH | SINGLE | | | | | | | | | | | | | | AS.266 | AS.967 | AS.968 | AS.969 | AS.970 |
| | | DOUBLE | | | | | | | | | | | | | | AS.333 | AS.1048 | AS.1049 | AS.1050 | AS.1051 |
| | | TREBLE | | | | | | | | | | | | | | AS.400 | AS.1129 | AS.1130 | AS.1131 | AS.1132 |
| WITH ROLLER. | B.S.1. CHAIN 8 M/M PITCH | SINGLE | | | | | | | | | | | | | | | AS.908 | | AS.909 | |
| | | DOUBLE | | | | | | | | | | | | | | | AS.989 | | AS.990 | |
| | | TREBLE | | | | | | | | | | | | | | | AS.1070 | | AS.1071 | |
| | B.S.2. CHAIN 3/8" PITCH | SINGLE | | | | | | | | | | | | | | | AS.923 | | AS.924 | |
| | | DOUBLE | | | | | | | | | | | | | | | AS.1004 | | AS.1005 | |
| | | TREBLE | | | | | | | | | | | | | | | AS.1085 | | AS.1086 | |
| | B.S.4. CHAIN 1/2" PITCH | SINGLE | | | | | | | | | | | | | | | AS.944 | | AS.945 | |
| | | DOUBLE | | | | | | | | | | | | | | | AS.1025 | | AS.1026 | |
| | | TREBLE | | | | | | | | | | | | | | | AS.1106 | | AS.1107 | |
| | B.S.6. CHAIN 1/2" PITCH | SINGLE | | | | | | | | | | | | | | | AS.971 | AS.972 | AS.973 | AS.974 |
| | | DOUBLE | | | | | | | | | | | | | | | AS.1052 | AS.1053 | AS.1054 | AS.1055 |
| | | TREBLE | | | | | | | | | | | | | | | AS.1133 | AS.1134 | AS.1135 | AS.1136 |
| WITHOUT ROLLER | B.S.6. CHAIN 1/2" PITCH | SINGLE | | | | | | | | | | | | | | | | AS.975 | AS.976 | AS.977 |
| | | DOUBLE | | | | | | | | | | | | | | | | AS.1056 | AS.1057 | AS.1058 |
| | | TREBLE | | | | | | | | | | | | | | | | AS.1137 | AS.1138 | AS.1139 |
| WITH ROLLER | B.S.1. CHAIN 8 M/M PITCH | SINGLE | | | | | | | | | | | | | | | | | AS.910 | |
| | | DOUBLE | | | | | | | | | | | | | | | | | AS.991 | |
| | | TREBLE | | | | | | | | | | | | | | | | | AS.1072 | |
| | B.S.2. CHAIN 3/8" PITCH | SINGLE | | | | | | | | | | | | | | | | | AS.925 | |
| | | DOUBLE | | | | | | | | | | | | | | | | | AS.1006 | |
| | | TREBLE | | | | | | | | | | | | | | | | | AS.1087 | |
| | B.S.4. CHAIN 1/2" PITCH | SINGLE | | | | | | | | | | | | | | | | | AS.946 | |
| | | DOUBLE | | | | | | | | | | | | | | | | | AS.1027 | |
| | | TREBLE | | | | | | | | | | | | | | | | | AS.1108 | |
| | B.S.6. CHAIN 1/2" PITCH | SINGLE | | | | | | | | | | | | | | | | | AS.978 | AS.979 |
| | | DOUBLE | | | | | | | | | | | | | | | | | AS.1059 | AS.1060 |
| | | TREBLE | | | | | | | | | | | | | | | | | AS.1140 | AS.1141 |
| WITHOUT ROLLER. | B.S.6. CHAIN 1/2" PITCH | SINGLE | | | | | | | | | | | | | | | | | | AS.980 |
| | | DOUBLE | | | | | | | | | | | | | | | | | | AS.1061 |
| | | TREBLE | | | | | | | | | | | | | | | | | | AS.1142 |

51

| ISSUE No | DATE |
|---|---|
| 1 | |
| 2 | 4·11·47 |

COMPILED B.P. WILSON

TRACED GARNET & Co 17. 10. 46

APPROVED

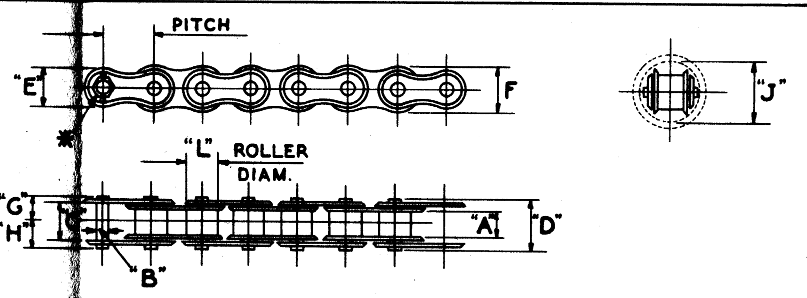


| PITCH | B.S. REF. No. | ROLLER DIA. 'L' | A | B | C | D | E | F | G | H | J | CHAIN BOLT PART No. |
|---|---|---|---|---|---|---|---|---|---|---|---|---|
| 8 M/M | B.S.1 | ·197 | ·118 | ·090 | ·192 | ·310 | ·245 | ·280 | ·190 | ·210 | ·360 | A.S.168/1. |
| 3/8" | B.S.2 | ·250 | ·155 | ·129 | ·267 | ·420 | ·325 | ·325 | ·230 | ·320 | ·490 | A.S.168/2. |
| 1/2" | B.S.4 | ·305 | ·130 | ·160 | ·240 | ·390 | ·355 | ·390 | ·230 | ·330 | ·490 | A.S.168/4. |
| 1/2" | B.S.6 | ·335 | ·205 | ·175 | ·350 | ·570 | ·420 | ·465 | ·300 | ·440 | ·650 | A.S.168/6. |

* NO SPLIT PIN WITH B.S.1 CHAIN.

## CHAIN DIMENSIONS.

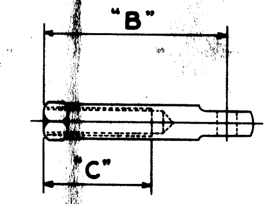


THIS PART IS ASSEMBLED TO CHAIN BY CHAIN MANUFACTURER.

| PART No. | THREAD | FOR CHAIN No. | ACROSS FLATS MIN. | ACROSS FLATS MAX. | B ±·005 | C MIN. | WT. IN LB. |
|---|---|---|---|---|---|---|---|
| A.S. 178 | 4 B.A. | B.S.1 | ·245 | ·248 | 1·10 | ·68 | ·0103 |
| A.S. 179 L. | 4 B.A. L.H. | B.S.1 | | | | | |
| A.S. 180 | 2 B.A. | B.S.2 | ·321 | ·324 | 1·30 | ·870 | ·0225 |
| A.S. 181 L. | 2 B.A. L.H. | B.S.2 | | | | | |
| A.S. 182 | 2 B.A. | B.S.4 | ·410 | ·413 | 1·30 | ·870 | ·0316 |
| A.S. 183 L. | 2 B.A. L.H. | B.S.4 | | | | | |
| A.S. 184 | 1/4 B.S.F. | B.S.6. | ·442 | ·445 | 1·50 | 1·050 | ·0512 |
| A.S. 185 L. | 1/4 B.S.F. L.H. | B.S.6. | | | | | |

## CHAIN CONNECTOR.

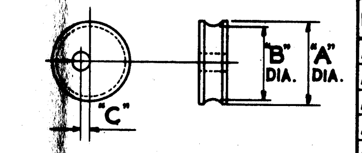


THIS PART IS ASSEMBLED TO CHAIN BY CHAIN MANUFACTURER.

| PART No | FOR USE WITH CHAIN B.S. No | CHAIN PITCH | CABLE A.S. No | CABLE SIZE | 'A' +·000 −·010 | 'B' ±·005 | 'C' ±·005 | WT IN LB |
|---|---|---|---|---|---|---|---|---|
| A.S.188 | 1 | 8 M/M | 4 | CWT 5 | ·430 | ·350 | ·100 | ·0059 |
| A.S.189 | 2 | 3/8" | 5 | 10 | ·500 | ·400 | ·090 | ·011 |
| A.S.190 | 2 | 3/8" | 6 | 15 | ·580 | ·450 | ·130 | ·0144 |
| A.S.191 | 4 | 1/2" | 6 | 15 | ·580 | ·450 | ·090 | ·0122 |
| A.S.192 | 4 | 1/2" | 3 | 20 | ·620 | ·500 | ·120 | ·0147 |
| A.S.193 | 6 | 1/2" | 51 | 25 | ·700 | ·550 | ·160 | ·0262 |
| A.S.194 | 6 | 1/2" | 52 | 35 | ·760 | ·600 | ·180 | ·0325 |

## CABLE SPOOL.

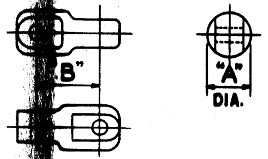


| PART No | FOR USE WITH CHAIN | 'A' +·000 −·003 | 'B' ±·005 | WT IN LB. |
|---|---|---|---|---|
| AS. 195 | B.S.1 | ·250 | ·400 | ·0075 |
| AS. 196 | B.S.2 | ·312 | ·500 | ·0125 |
| AS. 197 | B.S.4 | ·375 | ·550 | ·0191 |
| AS. 198 | B.S.6 | ·437 | ·625 | ·0338 |

THIS PART IS ASSEMBLED TO CHAIN BY CHAIN MANUFACTURER.

## BI-PLANAR BLOCK.

# THE DE HAVILLAND AIRCRAFT COMPANY LTD., HATFIELD, HERTS.

## GENERAL.

WHEREVER POSSIBLE THE S.B.A.C. RANGE OF CHAIN ASSEMBLIES SHOULD BE USED. THIS RANGE COVERS THREE DIFFERENT TYPES OF CHAINS:-

(a) SINGLE LENGTHS OF CHAIN WITH ANY DESIRED NUMBER OF PITCHES.

(b) TWO SEPARATE LENGTHS OF CHAIN CONNECTED BY A BI-PLANAR BLOCK WHICH TURNS ONE LENGTH THROUGH AN ANGLE OF 90°

(c) THREE SEPARATE LENGTHS OF CHAIN CONNECTED BY A BI-PLANER BLOCKS. THE CENTRE LENGTH IS TURNED AT AN ANGLE OF 90° TO THE OUTER LENGTHS.

WHERE THE S.B.A.C. CHAIN ASSEMBLIES CANNOT BE USED, DETAIL DRAWINGS OF THE COMPLETE CHAIN ASSEMBLY MUST BE MADE FOR THE USE OF CHAIN MANUFACTURERS AND SHOULD QUOTE THE B.S. CHAIN No., No. OF PITCHES AND END FITTINGS ETC., AND ALSO THE NOTE:- "MINIMUM BREAKING LOAD TO BE NOT LESS THAN 3x", WHERE "x" IS THE GREATEST UNFACTORED LOAD IN THE CHAIN.

## USE OF END FITTINGS.

CONNECTORS ARE SUPPLIED TO ENABLE THE CHAIN TO BE ASSEMBLED TO A SCREWED END SUCH AS A B.S.S. S.P.8 TURNBUCKLE OR A CONTROL ROD.

CABLE SPOOLS ARE SUPPLIED FOR CONNECTING THE CHAIN TO 5 CWT., 10 CWT., 15 CWT., 20 CWT., 25 CWT. OR 35 CWT. CABLE.

PLAIN ENDS ARE PROVIDED TO CATER FOR ENDLESS CHAINS AND CHAIN TO CHAIN CONNECTIONS.

ALTERNATIVE ASSEMBLIES OF EACH END CONNECTION ARE AVAILABLE SO THAT EACH END OF THE CHAIN ASSEMBLY MAY BE DIFFERENT, THUS PREVENTING INCORRECT ASSEMBLY OF THE CHAIN. THIS APPLIES, PRIMARILY, TO THE TWO AND THREE LENGTH CHAINS WHERE, DUE TO DIFFERENT LENGTHS OF CHAIN, IT IS NECESSARY TO ENSURE THAT THE CHAINS ARE FITTED ONE WAY ONLY. CHAINS REQUIRED WITH SIMILAR END LINKS MUST HAVE AN ODD No. OF PITCHES. TO AVOID THE USE OF CRANKED LINKS, CHAINS FORMING A CLOSED CIRCUIT MUST HAVE AN EVEN NUMBER OF PITCHES.

## METHOD OF CALLING-UP ON DRAWINGS.

SELECT A SINGLE, DOUBLE OR TREBLE LENGTH ASSEMBLY.

FROM THE HORIZONTAL TABLE SELECT THE FITTING REQUIRED AT THE LEFT HAND END. FROM THE VERTICAL TABLE THE PITCH, TYPE OF CHAIN AND FITTING REQUIRED AT THE RIGHT HAND END. THE PART NUMBER OF THIS PARTICULAR ASSEMBLY WILL BE FOUND WHERE THE COLUMNS INTERSECT.

THE NUMBER OF PITCHES REQUIRED IS TO BE CALLED FOR AFTER THE PART NUMBER OF THE DESIRED ASSEMBLY. WHEN TWO OR THREE LENGTHS OF CHAIN ARE TO BE USED, THE NUMBER OF PITCHES, READING FROM LEFT TO RIGHT, MUST BE GIVEN FOR EACH LENGTH. e.g. A.S. 222/8P./12P./14P.

STAINLESS STEEL CHAINS ARE CONSIDERABLY LARGER THAN NON-STAINLESS AND SHOULD NOT BE USED UNLESS ESSENTIAL. STANDARD END FITTINGS ARE NOT SUITABLE, SPECIAL FITTINGS BEING REQUIRED.

## NOTES ON ROLLER CHAIN DRIVES.

CENTRES OF SPROCKETS SHOULD NOT EXCEED 100 PITCHES WITH SPINDLES HORIZONTAL. MINIMUM CENTRES TO BE SUCH THAT ARC OF CONTACT IS NOT LESS THAN 120°. IF A COMPLETE CHAIN RUNS AROUND TWO SPROCKETS, SOME FORM OF ADJUSTMENT MUST BE PROVIDED TO TAKE UP SLACK.

AMPLE CLEARANCE MUST BE PROVIDED FOR THE PASSING OF END CONNECTIONS. GUARDS MUST BE FITTED TO PREVENT CHAIN LEAVING SPROCKET.

IN EXCEPTIONAL CASES THE CHAIN MAY LEAVE THE PLANE OF THE SPROCKET AT AN ANGLE NOT EXCEEDING 2°. THIS MAY BE INCREASED TO 5° PROVIDING A VERY MUCH OVERSIZE CHAIN IS FITTED.

CHAINS AND END CONNECTIONS. | DRAWING OFFICE DATA SHEET No 1/14

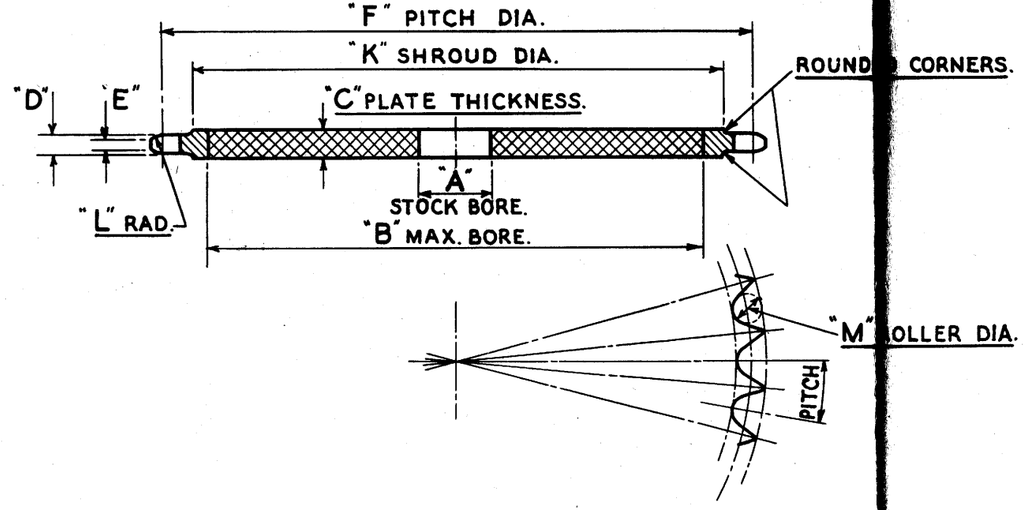


| PART NUMBER DURAL | PART NUMBER STEEL | B.S. CHAIN REF. No | CHAIN PITCH | No OF TEETH | A | B | C S.W.G. | C THICKNESS | D MAX. | D MIN. | E | F | K | L | M |
|---|---|---|---|---|---|---|---|---|---|---|---|---|---|---|---|
| A.S. 2320. | A.S. 2344. | 1 | 8 M/M. | 12 | ·312 | ·625 | 12 | ·104 | ·106 | ·100 | ·042 | 1·217 | ·85 | ·315 | ·197 |
| A.S. 2321. | A.S. 2345. | 1 | 8 M/M. | 15 | ·312 | ·875 | 12 | ·104 | ·106 | ·100 | ·042 | 1·515 | ·15 | ·315 | ·197 |
| A.S. 2322. | A.S. 2346. | 1 | 8 M/M. | 18 | ·312 | 1·25 | 12 | ·104 | ·106 | ·100 | ·042 | 1·814 | ·44 | ·315 | ·197 |
| A.S. 2323. | A.S. 2347. | 1 | 8 M/M. | 24 | ·375 | 1·80 | 12 | ·104 | ·106 | ·100 | ·042 | 2·413 | ·04 | ·315 | ·197 |
| A.S. 2324. | A.S. 2348. | 1 | 8 M/M. | 30 | ·500 | 2·40 | 12 | ·104 | ·106 | ·100 | ·042 | 3·013 | ·64 | ·315 | ·197 |
| A.S. 2325. | A.S. 2349. | 1 | 8 M/M. | 36 | ·500 | 3·00 | 12 | ·104 | ·106 | ·100 | ·042 | 3·614 | 3·24 | ·315 | ·197 |
| | | | | | | | | | | | | | | | |
| A.S. 2326. | A.S. 2350. | 2 | ·375 | 12 | ·312 | ·75 | 9 | ·144 | ·141 | ·134 | ·065 | 1·449 | ·98 | ·375 | ·25 |
| A.S. 2327. | A.S. 2351. | 2 | ·375 | 15 | ·312 | 1·00 | 9 | ·144 | ·141 | ·134 | ·065 | 1·804 | ·35 | ·375 | ·25 |
| A.S. 2328. | A.S. 2352. | 2 | ·375 | 18 | ·312 | 1·50 | 9 | ·144 | ·141 | ·134 | ·065 | 2·160 | 1·71 | ·375 | ·25 |
| A.S. 2329. | A.S. 2353. | 2 | ·375 | 24 | ·375 | 2·17 | 9 | ·144 | ·141 | ·134 | ·065 | 2·873 | 2·43 | ·375 | ·25 |
| A.S. 2330. | A.S. 2354. | 2 | ·375 | 30 | ·500 | 2·89 | 9 | ·144 | ·141 | ·134 | ·065 | 3·588 | 3·15 | ·375 | ·25 |
| A.S. 2331. | A.S. 2355. | 2 | ·375 | 36 | ·500 | 3·625 | 9 | ·144 | ·141 | ·134 | ·065 | 4·303 | 3·87 | ·375 | ·25 |
| | | | | | | | | | | | | | | | |
| A.S. 2332. | A.S. 2356. | 4 | ·50 | 12 | ·312 | 1·00 | 11 | ·116 | ·117 | ·110 | ·047 | 1·932 | ·45 | ·50 | ·305 |
| A.S. 2333. | A.S. 2357. | 4 | ·50 | 15 | ·312 | 1·50 | 11 | ·116 | ·117 | ·110 | ·047 | 2·405 | ·93 | ·50 | ·305 |
| A.S. 2334. | A.S. 2358. | 4 | ·50 | 18 | ·312 | 2·00 | 11 | ·116 | ·117 | ·110 | ·047 | 2·879 | 2·40 | ·50 | ·305 |
| A.S. 2335. | A.S. 2359. | 4 | ·50 | 24 | ·375 | 2·97 | 11 | ·116 | ·117 | ·110 | ·047 | 3·831 | 3·35 | ·50 | ·305 |
| A.S. 2336. | A.S. 2360. | 4 | ·50 | 30 | ·500 | 3·92 | 11 | ·116 | ·117 | ·110 | ·047 | 4·783 | 4·30 | ·50 | ·305 |
| A.S. 2337. | A.S. 2361. | 4 | ·50 | 36 | ·500 | 4·875 | 11 | ·116 | ·117 | ·110 | ·047 | 5·737 | 5·26 | ·50 | ·305 |
| | | | | | | | | | | | | | | | |
| A.S. 2338. | A.S. 2362. | 6 | ·50 | 12 | ·375 | ·85 | 6 | ·192 | ·189 | ·181 | ·089 | 1·932 | ·31 | ·50 | ·335 |
| A.S. 2339. | A.S. 2363. | 6 | ·50 | 15 | ·375 | 1·35 | 6 | ·192 | ·189 | ·181 | ·089 | 2·405 | ·80 | ·50 | ·335 |
| A.S. 2340. | A.S. 2364. | 6 | ·50 | 18 | ·375 | 1·85 | 6 | ·192 | ·189 | ·181 | ·089 | 2·879 | 2·28 | ·50 | ·335 |
| A.S. 2341. | A.S. 2365. | 6 | ·50 | 24 | ·500 | 2·80 | 6 | ·192 | ·189 | ·181 | ·089 | 3·831 | 3·24 | ·50 | ·335 |
| A.S. 2342. | A.S. 2366. | 6 | ·50 | 30 | ·500 | 3·75 | 6 | ·192 | ·189 | ·181 | ·089 | 4·783 | 4·20 | ·50 | ·335 |
| A.S. 2343. | A.S. 2367. | 6 | ·50 | 36 | ·500 | 4·72 | 6 | ·192 | ·189 | ·181 | ·089 | 5·737 | 5·16 | ·50 | ·335 |

| ISSUE No | DATE |
|---|---|
| 1 | |
| | |
| | |
| | |
| | |
| | |
| COMPILED | |
| B.P. WILSON | |
| TRACED | |
| GARNET & Co 3. 9. 46. | |
| APPROVED | |

SPROCKETS.

DRAWING OFFICE DATA SHEET No. 1/15

52

## SPROCKET NOTES.

1. WHERE POSSIBLE THE S.B.A.C. STANDARD SPROCKETS LISTED ON THIS SHEET SHOULD BE USED. THESE PLATE SPROCKETS ARE MANUFACTURED IN DURAL, SPECN L.3. OR STEEL, SPECN S.3. THE SPROCKET IS SUPPLIED WITH THE CENTRAL HOLE AS "A" BELOW BUT MAY BE INCREASED TO A MAXIMUM OF DIMENSION "B" ACCORDING TO THE METHOD OF FIXING THE SPROCKET. DIMENSION "B" IS THE MAXIMUM ALLOWABLE WITHOUT IMPAIRING THE STRENGTH.

2. WHERE DESIGN CONSIDERATIONS PRECLUDE THE USE OF STANDARD SPROCKETS ALL NECESSARY TOOTH DIMENSIONS CAN BE OBTAINED FROM THE "REYNOLD AND COVENTRY CO'S HANDBOOK" No. 316/52 (COPIES OF THIS HANDBOOK ARE RETAINED FOR REFERENCE IN THE STANDARDS SECTION). THE FOLLOWING DIMENSIONS IN RESPECT OF TEETH MUST BE GIVEN ON ALL DRAWINGS OF SPROCKETS :-
   NUMBER OF TEETH.
   PITCH CIRCLE DIAMETER.
   ROLLER DIAMETER.
   TOP DIAMETER.
   SHROUD DIAMETER, (IF USED)
   WIDTH AT ROOT OF TOOTH.
   WIDTH AT CREST OF TOOTH.
   RADIUS ON SIDE OF TOOTH.
   THE FOLLOWING NOTE MUST ALSO BE GIVEN ON DRAWING :-
   "TOOTH FORM TO SUIT B.S. CHAIN No.--------." THE APPROPRIATE B.S. CHAIN No. BEING INSERTED.

## END FITTINGS

BRITISH STANDARDS S.P. 33 TO SP. 39 AND SP. 49 & 50 PROVIDE A RANGE OF END FITTINGS FOR SWAGING ON TO CONTROL CABLE FROM 5 TO 45 CWT.

ALL END FITTINGS CARRY THE ULTIMATE LOAD OF THE CABLE TO WHICH THEY ARE SWAGED EXCEPT THE 35 CWT (3920 LBS) FITTINGS WITH 1/4" B.S.F. THREAD WHERE THE 1/4" THREAD IS THE CRITERION (3890 LBS), ALSO THE BALL END FITTING SP. 50 WHICH HAS AN ULTIMATE TENSILE LOAD OF 448 LBS ON 5 CWT CABLE.

## INCORRECT ASSEMBLY.

FOR EACH LOAD RATING OF CABLE TWO ALTERNATIVE THREAD SIZES ARE PROVIDED FOR THE END FITTINGS, EACH HAVING AN ALTERNATIVE L.H. AND R.H. THREAD. IT IS THEREFORE POSSIBLE TO PROVIDE EIGHT TURNBUCKLE ASSEMBLIES FOR ANY ONE LOAD RATING OF CABLE IN SUCH A WAY THAT NO CONTROL RUN CAN BE CROSSED WHEN ALL ARE ASSEMBLED.

AN ALTERNATIVE EYE END TO SP. 37 IS PROVIDED BY D.H.S. 308 WHICH HAS A LARGER BLADE. THE USE OF DIFFERENT SIZE HOLES TO SAFEGUARD AGAINST CROSSED CONTROLS IS NOT ACCEPTABLE.

## CABLE DRAWINGS.

IT IS RECOMMENDED THAT A CABLE ASSEMBLIES DRAWING IS PRODUCED FOR EACH NEW AIRCRAFT TYPE THIS FACILITATES CHECKING FOR CROSSED CONTROLS AND PROVIDES A RECORD OF ALL CONTROL CABLES USED.

THIS DRAWING MUST GIVE THE FOLLOWING INFORMATION

I. CABLE SIZE AND SPEC: eg. B.S. W.9. 4P. 5 CWT.
II. CABLE LENGTH AND TOLERANCE (SEE BELOW)
III. PART Nº OF END FITTINGS. NOTE WHERE CABLE ANCHORAGE D.H.S. 218-9 IS USED THE RELATIONSHIP OF THE END FITTINGS TO THE ANCHORAGE MUST BE GIVEN. SEE D.H.S. 513 OR DATA SHEET 1/18B.
IV. INSPECTION AND TEST TO B.S. SP. 53, AND W.I.D. MEMO Nº 102.
V. PROTECTIVE TREATMENT (PO) LANOLIN DIP TO D.T.D. 663.

53.

## CABLE DETAILS; PROOF & ULTIMATE LOADINGS.

| SPEC. B.S. W9. ITEM Nº | 4P | 5P | 6P | 3P | 51P | 52P | 53P | 54P | 55P | 56P | 57P | 58P | 59P | 60P |
|---|---|---|---|---|---|---|---|---|---|---|---|---|---|---|
| BREAKING LOAD CWTS | 5 | 10 | 15 | 20 | 25 | 35 | 45 | 60 | 70 | 80 | 100 | 120 | 140 | 160 |
| BREAKING LOAD LBS. | 560 | 1120 | 1680 | 2240 | 2800 | 3920 | 5040 | 6720 | 7840 | 8960 | 11200 | 13440 | 15680 | 17920 |
| PROOF LOAD LBS. | 280 | 560 | 840 | 1120 | 1400 | 1960 | 2520 | 3360 | 3920 | 4480 | 5600 | 6720 | 7840 | 8960 |
| MAX. DIAMETER INS. | ·08 | ·12 | ·15 | ·16 | ·18 | ·21 | ·24 | ·27 | ·28 | ·31 | ·34 | ·40 | ·42 | ·44 |
| CONSTRUCTION | 7x7 | 7x14 | 7x19 | 7x19 | 7x19 | 7x19 | 7x19 | 7x19 | 7x19 | 7x19 | 7x19 | 7x37 | 7x37 | 7x37 |
| MAX. WEIGHT LBS/100 FT | 1·11 | 2·22 | 3·75 | 4·5 | 5·4 | 7·0 | 9·0 | 11·9 | 13·2 | 16·4 | 19·8 | 26·2 | 29·2 | 32·5 |

## LENGTH OF ASSEMBLIES

LENGTH "L" WILL BE MEASURED FROM THE POSITIONS SHOWN BELOW AND QUOTED TO THE NEAREST 1/4"

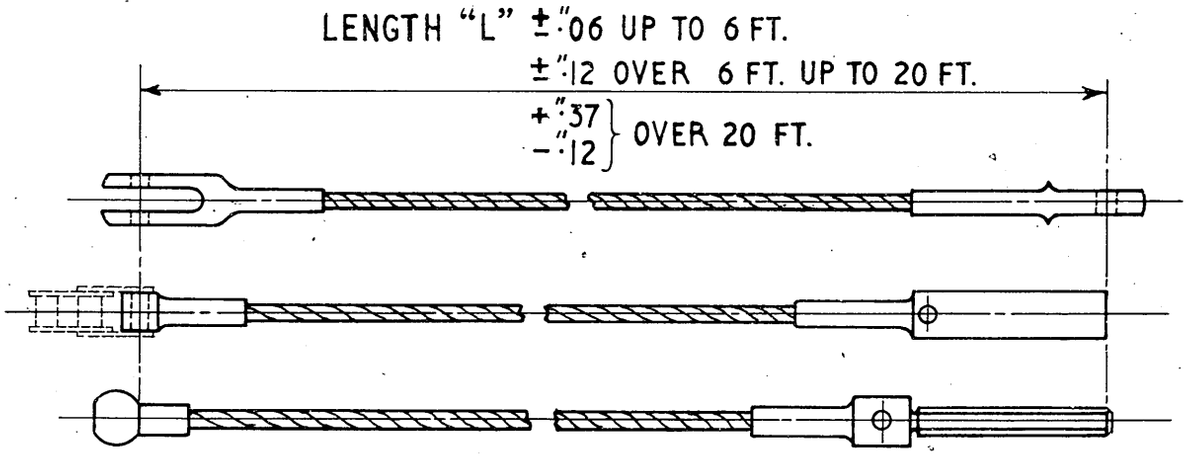


| ISSUE Nº | DATE |
|---|---|
| 1 | |
| 2 | JUNE '54 |
| | |
| | |
| | |

COMPILED
L. SPENCER
TRACED
DOLTON DRG Co. 16 · 9 · 52
APPROVED

CONTROL CABLE ASSEMBLIES, B.S. & D.H.S

DRAWING OFFICE DATA SHEET Nº 1/16A

# THE DE HAVILLAND AIRCRAFT COMPANY LTD., HATFIELD, HERTS.

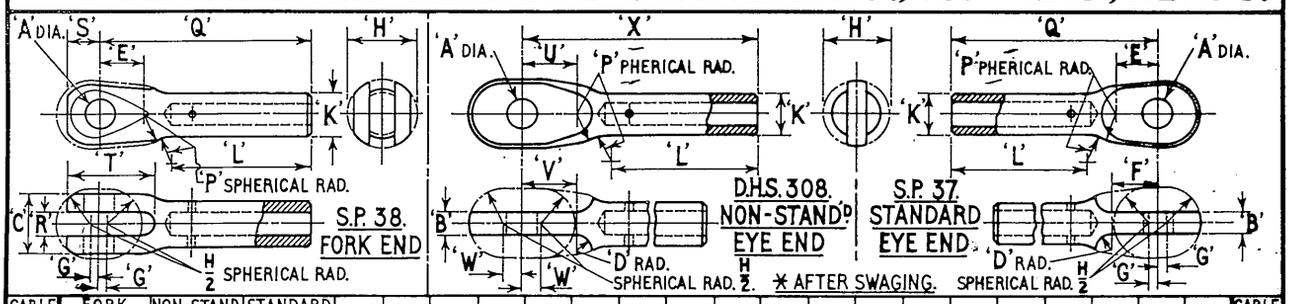


| CABLE SIZE CWTS | FORK END PART Nº | NON-STAND^D EYE END PART Nº | STANDARD EYE END PART Nº | DIA. 'A' | 'B' | 'C' | RAD. 'D' | 'E' | 'F' | 'G' | DIA. 'H' | 'K'* | 'L' | RAD. 'P' | 'Q'* | 'R' | 'S' | 'T' | 'U' | 'V' | 'W' | 'X'* | CABLE SIZE CWTS |
|---|---|---|---|---|---|---|---|---|---|---|---|---|---|---|---|---|---|---|---|---|---|---|---|
| 5 | SP. 38 A | D.H.S. 308/5 | SP 37 A | 5/32" | ·096 | ·26 | ·10 | ·30 | ·25 | ·04 | ·36 | ·156 | ·51 | ·13 | 1·04 | ·10 | ·19 | ·54 | ·41 | ·36 | ·15 | 1·15 | 5 |
| 10 | SP. 38 B | D.H.S. 308/10 | SP. 37 B | 5/32" | ·096 | ·26 | ·10 | ·30 | ·25 | ·04 | ·36 | ·218 | ·81 | ·13 | 1·31 | ·10 | ·19 | ·54 | ·46 | ·41 | ·20 | 1·47 | 10 |
| 15 | SP. 38 C | D.H.S 308/15 | SP. 37 C | 3/16" | ·146 | ·33 | ·10 | ·325 | ·31 | ·06 | ·48 | ·25 | ·93 | ·16 | 1·51 | ·15 | ·24 | ·64 | ·465 | ·45 | ·20 | 1·65 | 15 |
| 20 | SP. 38 D | D.H.S. 308/20 | SP. 37 D | 1/4" | ·196 | ·42 | ·15 | ·38 | ·34 | ·05 | ·56 | ·281 | ·98 | ·21 | 1·69 | ·20 | ·27 | ·75 | ·53 | ·49 | ·20 | 1·84 | 20 |
| 25 | SP. 38 E | D.H.S. 308/25 | SP. 37 E | 1/4" | ·196 | ·42 | ·15 | ·38 | ·34 | ·05 | ·56 | ·312 | 1·17 | ·21 | 1·87 | ·20 | ·27 | ·75 | ·53 | ·49 | ·20 | 2·02 | 25 |
| 30/35 | SP. 38 F | D.H.S. 308/35 | SP. 37 F | 1/4" | ·196 | ·48 | ·15 | ·40 | ·39 | ·08 | ·62 | ·375 | 1·34 | ·24 | 2·05 | ·20 | ·30 | ·80 | ·52 | ·51 | ·20 | 2·17 | 30/35 |
| 40/45 | SP. 38 G | D.H.S. 308/45 | SP. 37 G | 5/16" | ·246 | ·63 | ·15 | ·475 | ·50 | ·08 | ·72 | ·437 | 1·52 | ·31 | 2·42 | ·25 | ·34 | ·94 | ·595 | ·62 | ·20 | 2·54 | 40/45 |

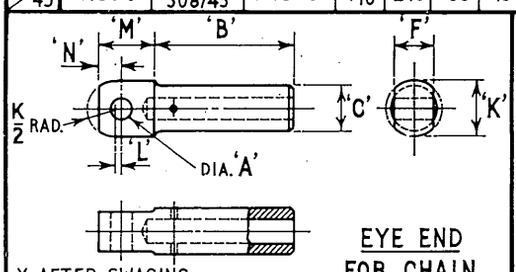


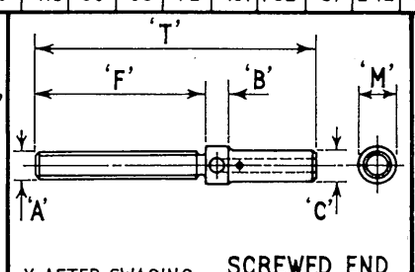


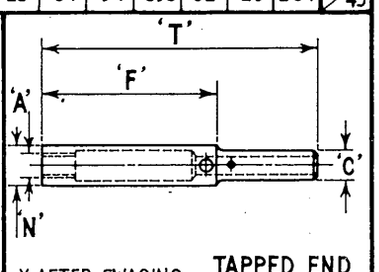


| PART NUMBER | CHAIN SIZE | CABLE SIZE CWTS | DIA. 'A' | 'B'* | 'C'* | 'F' | 'K' | 'L' | 'M' | 'N' |
|---|---|---|---|---|---|---|---|---|---|---|
| SP.39/1-5 | BS1 | 5 | ·093 | ·55 | ·156 | ·186 | ·25 | ·05 | ·3 | ·13 |
| SP.39/1-10 | BS1 | 10 | ·093 | ·94 | ·218 | ·186 | ·25 | ·05 | ·3 | ·13 |
| SP.39/2-10 | BS2 | 10 | ·131 | ·86 | ·218 | ·261 | ·312 | ·04 | ·38 | ·16 |
| SP.39/4-10 | BS4 | 10 | ·162 | ·86 | ·218 | ·232 | ·344 | ·07 | ·43 | ·19 |
| SP.39/2-15 | BS2 | 15 | ·131 | 1·0 | ·25 | ·261 | ·312 | ·04 | ·38 | ·16 |
| SP.39/4-15 | BS4 | 15 | ·162 | 1·0 | ·25 | ·232 | ·344 | ·07 | ·43 | ·19 |
| SP.39/4-20 | BS4 | 20 | ·162 | 1·11 | ·281 | ·232 | ·344 | ·07 | ·43 | ·19 |
| SP.39/6-20 | BS6 | 20 | ·181 | 1·08 | ·281 | ·344 | ·44 | ·05 | ·50 | ·22 |
| SP.39/6-25 | BS6 | 25 | ·181 | 1·26 | ·312 | ·344 | ·44 | ·05 | ·50 | ·22 |
| SP.39/6-30 | BS6 | 30/35 | ·181 | 1·39 | ·375 | ·344 | ·44 | ·05 | ·50 | ·22 |
| SP.39/10-35 | BS.10 | 30/35 | ·206 | 1·35 | ·375 | ·4 | ·562 | ·06 | ·58 | ·25 |
| SP.39/10-45 | BS.10 | 40/45 | ·206 | 1·6 | ·437 | ·4 | ·562 | ·06 | ·58 | ·25 |

| CABLE SIZE CWTS | PART NUMBER | THREAD | 'A' | 'B' | 'C'* | 'F' | 'M' | 'T'* |
|---|---|---|---|---|---|---|---|---|
| 5 | SP.34 B.5 L | L.H | 4 | ·24 | ·156 | 1·00 | ·25 | 1·85 |
| | SP.34 B.5 | R.H | B.A | | | | | |
| 5 | SP.34 C.5 L | L.H | 2 | ·24 | ·156 | 1·71 | ·25 | 2·56 |
| | SP.34.C.5 | R.H | B.A. | | | | | |
| 10 | SP.34 C.10 L | L.H | 2 | ·29 | ·218 | 1·71 | ·312 | 2·81 |
| | SP.34 C.10 | R.H | B.A. | | | | | |
| 10 | SP.34 E.10 L | L.H | 1/4" | ·29 | ·218 | 1·80 | ·312 | 2·90 |
| | SP.34 E.10 | R.H | B.S.F. | | | | | |
| 15 | SP.34 C.15 L | L.H | 2 | ·30 | ·25 | 1·71 | ·375 | 2·93 |
| | SP.34 C.15 | R.H | B.A | | | | | |
| 15 | SP.34 E.15 L | L.H | 1/4" | ·30 | ·25 | 1·80 | ·375 | 3·02 |
| | SP.34 E.15 | R.H | B.S.F. | | | | | |
| 20 | SP.34 E.20 L | L.H | 1/4" | ·33 | ·281 | 1·80 | ·375 | 3·16 |
| | SP.34 E.20 | R.H | B.S.F. | | | | | |
| 20 | SP.34 G.20 L | L.H | 5/16" | ·33 | ·281 | 1·90 | ·375 | 3·26 |
| | SP.34 G.20 | R.H | B.S.F. | | | | | |
| 25 | SP.34 E.25 L | L.H | 1/4" | ·33 | ·312 | 1·80 | ·437 | 3·33 |
| | SP.34 E.25 | R.H | B.S.F. | | | | | |
| 25 | SP.34 G.25 L | L.H | 5/16 | ·33 | ·312 | 1·90 | ·437 | 3·41 |
| | SP.34 G.25 | R.H | B.S.F. | | | | | |
| 30/35 | SP.34 E.30 L | L.H | 1/4" | ·33 | ·375 | 1·80 | ·437 | 3·45 |
| | SP.34 E.30 | R.H | B.S.F. | | | | | |
| 30/35 | SP.34 G.35 L | L.H | 5/16" | ·33 | ·375 | 1·90 | ·437 | 3·55 |
| | SP.34 G.35 | R.H | B.S.F. | | | | | |

| CABLE SIZE CWTS | PART NUMBER | THREAD | 'A' | 'C'* | 'F' | 'N' | 'T'* |
|---|---|---|---|---|---|---|---|
| 5 | SP.36 B.5 L | L.H | 4 | ·156 | 1·13 | ·25 | 1·77 |
| | SP.36 B.5 | R.H | B.A | | | | |
| 5 | SP.36 C.5 L | L.H | 2 | ·156 | 1·85 | ·312 | 2·49 |
| | SP.36 C.5 | R.H | B.A | | | | |
| 10 | SP.36 C.10 L | L.H | 2 | ·218 | 1·84 | ·312 | 2·67 |
| | SP.36.C.10 | R.H | B.A | | | | |
| 10 | SP.36 E.10 L | L.H | 1/4" | ·218 | 1·91 | ·375 | 2·74 |
| | SP.36 E.10 | R.H | B.S.F. | | | | |
| 15 | SP.36 C.15 L | L.H | 2 | ·25 | 1·84 | ·312 | 2·79 |
| | SP.36 C.15 | R.H | B.A | | | | |
| 15 | SP.36 E.15 L | L.H | 1/4" | ·25 | 1·90 | ·375 | 2·85 |
| | SP.36.E.15 | R.H | B.S.F. | | | | |
| 20 | SP.36.E.20 L | L.H | 1/4" | ·281 | 1·89 | ·406 | 2·91 |
| | SP.36 E.20 | R.H | B.S.F. | | | | |
| 20 | SP.36 G.20 L | L.H | 5/16" | ·281 | 1·99 | ·5 | 3·01 |
| | SP.36 G.20 | R.H | B.S.F. | | | | |
| 25 | SP.36 E.25 L | L.H | 1/4" | ·312 | 1·89 | ·406 | 3·05 |
| | SP.36 E.25 | R.H | B.S.F. | | | | |
| 25 | SP.36 G.25 L | L.H | 5/16 | ·312 | 1·99 | ·5 | 3·15 |
| | SP.36 G.25 | R.H | B.S.F. | | | | |
| 30/35 | SP.36 E.30 L | L.H | 1/4" | ·375 | 1·88 | ·406 | 3·17 |
| | SP.36 E.30 | R.H | B.S.F. | | | | |
| 30/35 | SP.36 G.35 L | L.H | 5/16" | ·375 | 1·98 | ·5 | 3·27 |
| | SP.36 G.35 | R.H | B.S.F. | | | | |
| 40/45 | SP.36 G.45 L | L.H | 5/16 | ·437 | 1·97 | ·5 | 3·48 |
| | SP.36 G.45 | R.H | B.S.F. | | | | |

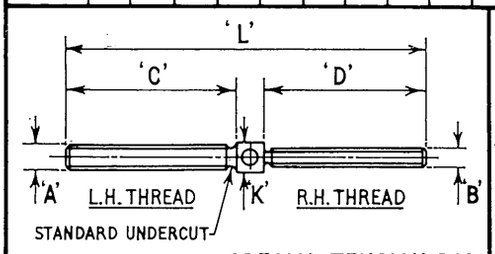


SPECIAL TENSION ROD

| PART NUMBER | 'A' | 'B' | 'C' | 'D' | 'K' | 'L' |
|---|---|---|---|---|---|---|
| SP. 35. BC | 4 B.A. | 2 B.A. | 1·0 | 1·71 | 1/4" | 3·01 |
| SP. 35. CB | 2 B.A. | 4 B.A. | 1·71 | 1·0 | 1/4" | 3·01 |
| SP. 35. CE | 2 B.A. | 1/4" B.S.F. | 1·71 | 1·8 | 5/16" | 3·81 |
| SP. 35. EC | 1/4" B.S.F. | 2 B.A. | 1·8 | 1·71 | 5/16" | 3·81 |
| SP. 35. EG | 1/4" B.S.F. | 5/16" B.S.F. | 1·8 | 1·9 | 3/8" | 4·1 |
| SP. 35. GE | 5/16" B.S.F. | 1/4" B.S.F. | 1·9 | 1·8 | 3/8" | 4·1 |

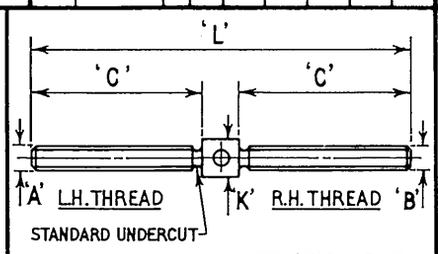


TENSION ROD

| PART NUMBER | 'A' | 'B' | 'C' | 'K' | 'L' |
|---|---|---|---|---|---|
| SP. 35. B | 4 B.A. | 4 B.A. | 1·0 | 1/4" | 2·3 |
| SP. 35. C | 2 B.A. | 2 B.A. | 1·71 | 5/16" | 3·72 |
| SP. 35. E | 1/4" B.S.F. | 1/4" B.S.F. | 1·8 | 3/8" | 4·0 |
| SP. 35. G | 5/16" B.S.F. | 5/16" B.S.F. | 1·9 | 7/16" | 4·2 |

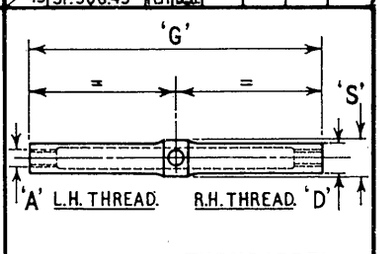


TURNBARREL

| PART NUMBER | 'A' | 'D' | 'G' | 'S' |
|---|---|---|---|---|
| SP. 33. B | 4 B.A. | ·25 | 1·91 | ·312 |
| SP. 33. C | 2 B.A. | ·312 | 3·26 | ·375 |
| SP. 33. E | 1/4" B.S.F. | ·406 | 3·36 | ·50 |
| SP. 33. G. | 5/16" B.S.F. | ·50 | 3·50 | ·625 |
| FOR 45 CWT. CABLE & OVER USE DHS 487 | | | | |

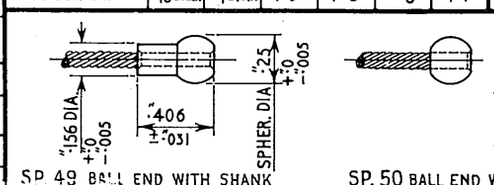


SP. 49 BALL END WITH SHANK
(U.T.S. 560 lbs.) FOR USE WITH 5 C.W.T. CABLE ONLY

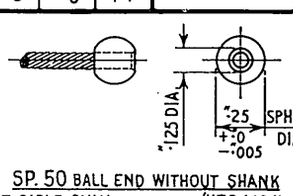


SP. 50 BALL END WITHOUT SHANK
(U.T.S. 448 lbs)

MATERIAL.

B.S. S.P. 34 & SP. 35, H.T.S. SPEC: S. 96. CADMIUM PLATED.
ALL OTHER ENDS MILD STEEL, SPEC: S.I. CADMIUM PLATED.

NOTE

EXCEPT FOR CERTAIN OF THE 1/4" B.S.F. SIZES, ALL THE SWAGED ENDS ARE UP TO THE STRENGTH OF THE CABLE.
(SEE DATA SHEET 111/30 FOR STRENGTH OF 1/4" B.S.F. THREAD)

| ISSUE Nº | DATE |
|---|---|
| 3 | JUNE '54 |

DRAWN
L. SPENCER
TRACED
DOLTON DRWG CO
4 - 9 - 1952
APPROVED

# SWAGED CABLE-END CONNECTIONS

DRAWING OFFICE DATA SHEET Nº 1/16 B

# THE DE HAVILLAND AIRCRAFT COMPANY LTD., HATFIELD, HERTS.

## SPECIAL TURNBARREL ASSEMBLY FOR 45 CWT. CABLE & OVER.

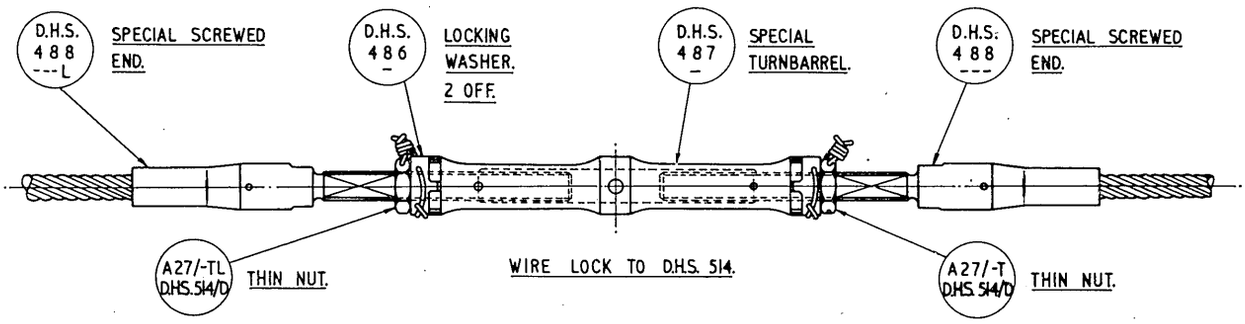


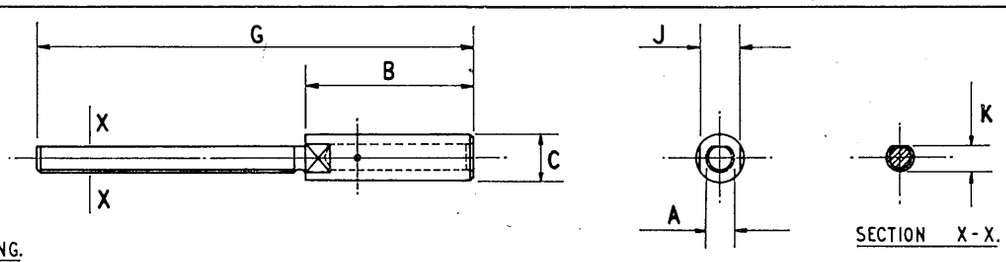


✳ AFTER SWAGING.

| CABLE SIZE CWTS. | PART NUMBER. | THREAD A | | B +·010 −·0 | B ✳ | C DIA. +·005 −·0 | C✳ DIA. +·0 −·005 | G✳ OVERALL LENGTH | J | K |
|---|---|---|---|---|---|---|---|---|---|---|
| 45 | D.H.S. 488 G 45 L | L.H. | 5/16" B.S.F. | 1·80 | 1·95 | ·486 | ·437 | 4·85 | ·445 ·440 | ·282 ·279 |
| | D.H.S. 488 G 45 | R.H. | | | | | | | | |
| 45 | D.H.S. 488 GG 45 L | L.H. | 5/16" B.S.F. | 1·80 | 1·95 | ·486 | ·437 | 5·10 | ·445 ·440 | ·282 ·279 |
| | D.H.S. 488 GG 45 | R.H. | | | | | | | | |
| 60 | D.H.S. 488 J 60 L | L.H. | 3/8" B.S.F. | 2·15 | 2·30 | ·560 | ·505 | 5·35 | ·445 ·440 | ·342 ·339 |
| | D.H.S. 488 J 60 | R.H. | | | | | | | | |

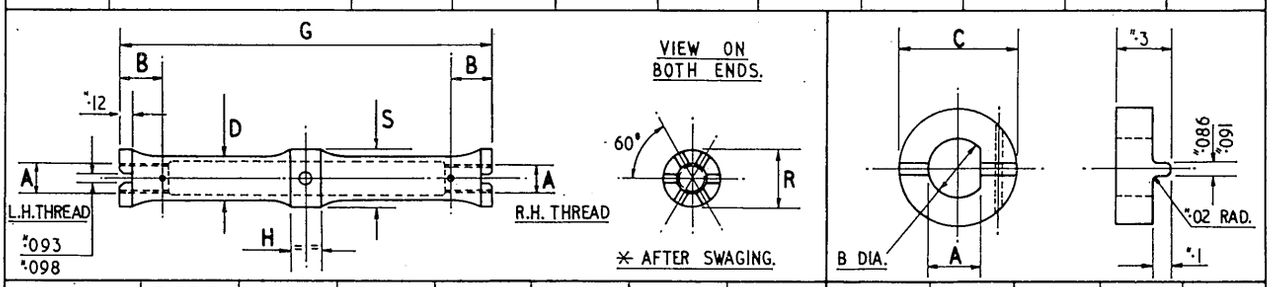


| PART NUMBER | THREAD A | B | D DIA. +·0 −·005 | G LENGTH +·020 −·0 | H +·010 −·0 | R DIA. +·005 −·0 | S DIA. |
|---|---|---|---|---|---|---|---|
| D.H.S. 487 G | 5/16" B.S.F. | ·47 | ·5 | 4·0 | ·35 | ·625 | ·625 |
| D.H.S. 487 GG | 5/16" B.S.F. | ·47 | ·5 | 5·0 | ·35 | ·625 | ·625 |
| D.H.S. 487 J | 3/8" B.S.F. | ·52 | ·56 | 5·4 | ·50 | ·68 | ·68 |

| PART NUMBER | FOR USE WITH | DIM. A | DIA. B | DIA. C |
|---|---|---|---|---|
| D.H.S. 486G | D.H.S. 488/G & GG | ·283 ·285 | ·313 ·315 | 5/8" |
| D.H.S. 486J | D.H.S. 488/J | ·343 ·345 | ·376 ·378 | 11/16" |
| D.H.S. 486L | D.H.S. 488/L | ·402 ·404 | ·435 ·440 | 3/4" |

## SWAGES FOR SPECIAL ENDS 60 TO 120 CWT.

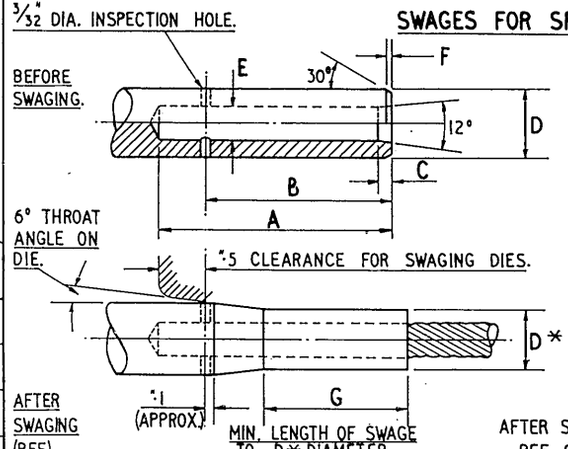


ONLY THE SWAGES DETAILED HERE ARE TO BE USED TO ATTACH END FITTING TO CABLES 60-120 CWT. DRAWINGS MUST FULLY DETAIL THE "BEFORE SWAGING" DIMENSIONS AND CALL UP "SWAGE TO D.H.S. 543/-."

MIN. LENGTH OF SWAGE TO D✳ DIAMETER.

AFTER SWAGE DIMS REF. ONLY

| PART No. | A −·0 +·015 | B +·0 −·010 | C +·010 −·0 | D DIA. +·005 −·0 | E DIA. +·005 −·0 | CHAM. F | D✳ DIA. | G MIN. LENGTH |
|---|---|---|---|---|---|---|---|---|
| D.H.S. 543/60 | 1·813 | 1·406 | ·12 | ·560 | ·265 | ·04 ·05 | ·505 ·495 | 1·0 |
| D.H.S. 543/80 | 2·000 | 1·563 | ·12 | ·625 | ·302 | ·04 ·05 | ·565 ·555 | 1·1 |
| D.H.S. 543/100 | 2·188 | 1·719 | ·12 | ·682 | ·332 | ·04 ·05 | ·625 ·615 | 1·2 |
| D.H.S. 543/120 | 2·500 | 2·000 | ·15 | ·776 | ·386 | ·06 ·07 | ·688 ·678 | 1·5 |

### SPECIAL EYE ENDS

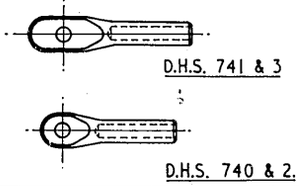

D.H.S. 741 & 3

D.H.S. 740 & 2.

SPECIAL EYE ENDS FOR USE IN CONJUNCTION WITH 10 CWT. CABLE & 5/16" DIA. BOLTS.

### SPECIAL FORK ENDS

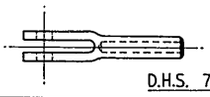

D.H.S. 756

SPECIAL FORK ENDS FOR USE IN CONJUNCTION WITH B.S.SP. 38 & PROVIDE A NON-INTERCHANGEABLE END.

### CHAIN CABLE CONNECTOR

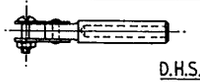

D.H.S. 749

SPECIAL CHAIN-CABLE CONNECTOR FOR USE IN CONJUNCN WITH B.S.SP. 39 & PROVIDE A NON-INTERCHANGEABLE END.

| ISSUE No. | DATE |
|---|---|
| 1 | JUNE '54 |

COMPILED: L. SPENCER

TRACED: P.G.S.

APPROVED

# SWAGED CABLE-END CONNECTIONS

DRAWING OFFICE DATA SHEET No. 1/16C

# THE DE HAVILLAND AIRCRAFT COMPANY LTD., HATFIELD, HERTS.

## HIGH TENSILE PINS

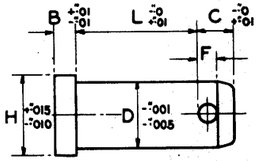


SPECN S.P.4.Y. H.T. STEEL. S.2. OR S.11.
S.P. 4.Z. STAINLESS STEEL. S.80.

NOTE: FOR PINS GREATER THAN ½" SEE B.S.S. S.P.4.

| DIA. OF PIN D IN. | DIA. H. IN. | B. IN. | C. IN. | SPLIT PIN F. | PART Nº | PART NUMBERS. LENGTH "L". | | | | | | | | | | | | | | | | | | | | | | | | | | | | | | | | | | | |
|---|---|---|---|---|---|---|---|---|---|---|---|---|---|---|---|---|---|---|---|---|---|---|---|---|---|---|---|---|---|---|---|---|---|---|---|---|---|---|---|---|---|
| | | | | | | ·25 | ·30 | ·35 | ·40 | ·45 | ·50 | ·55 | ·60 | ·65 | ·70 | ·75 | ·80 | ·85 | ·90 | ·95 | 1·0 | 1·1 | 1·2 | 1·3 | 1·4 | 1·5 | 1·6 | 1·7 | 1·8 | 1·9 | 2·0 | 2·2 | 2·4 | 2·6 | 2·8 | 3·0 | 3·2 | 3·4 |
| 5/32" | ¼" | 0·05 | 0·12 | No. 52 | A | 1 | 2 | 3 | 4 | 5 | 6 | 7 | 8 | 9 | 10 | 11 | 12 | 13 | 14 | 15 | 16 | | | | | | | | | | | | | | | | | |
| 3/16" | 5/16" | 0·06 | 0·12 | No. 52 | B | 1 | 2 | 3 | 4 | 5 | 6 | 7 | 8 | 9 | 10 | 11 | 12 | 13 | 14 | 15 | 16 | 17 | 18 | 19 | 20 | 21 | 22 | 23 | 24 | 25 | 26 | | | | | | | |
| 7/32" | 5/16" | 0·07 | 0·12 | No. 52 | C | 1 | 2 | 3 | 4 | 5 | 6 | 7 | 8 | 9 | 10 | 11 | 12 | 13 | 14 | 15 | 16 | 17 | 18 | 19 | 20 | 21 | 22 | 23 | 24 | 25 | 26 | | | | | | | |
| ¼" | 3/8" | 0·08 | 0·12 | No. 52 | D | 1 | 2 | 3 | 4 | 5 | 6 | 7 | 8 | 9 | 10 | 11 | 12 | 13 | 14 | 15 | 16 | 17 | 18 | 19 | 20 | 21 | 22 | 23 | 24 | 25 | 26 | 27 | 28 | 29 | 30 | 31 | | |
| 9/32" | 3/8" | 0·09 | 0·18 | No. 41 | E | 1 | 2 | 3 | 4 | 5 | 6 | 7 | 8 | 9 | 10 | 11 | 12 | 13 | 14 | 15 | 16 | 17 | 18 | 19 | 20 | 21 | 22 | 23 | 24 | 25 | 26 | 27 | 28 | 29 | 30 | 31 | | |
| 5/16" | 7/16" | 0·10 | 0·18 | No. 41 | F | 1 | 2 | 3 | 4 | 5 | 6 | 7 | 8 | 9 | 10 | 11 | 12 | 13 | 14 | 15 | 16 | 17 | 18 | 19 | 20 | 21 | 22 | 23 | 24 | 25 | 26 | 27 | 28 | 29 | 30 | 31 | | |
| 11/32" | 7/16" | 0·11 | 0·18 | No. 41 | G | 1 | 2 | 3 | 4 | 5 | 6 | 7 | 8 | 9 | 10 | 11 | 12 | 13 | 14 | 15 | 16 | 17 | 18 | 19 | 20 | 21 | 22 | 23 | 24 | 25 | 26 | 27 | 28 | 29 | 30 | 31 | | |
| 3/8" | ½" | 0·12 | 0·18 | No. 41 | H | 1 | 2 | 3 | 4 | 5 | 6 | 7 | 8 | 9 | 10 | 11 | 12 | 13 | 14 | 15 | 16 | 17 | 18 | 19 | 20 | 21 | 22 | 23 | 24 | 25 | 26 | 27 | 28 | 29 | 30 | 31 | 32 | 33 |
| 13/32" | ½" | 0·13 | 0·25 | No. 30 | J | 1 | 2 | 3 | 4 | 5 | 6 | 7 | 8 | 9 | 10 | 11 | 12 | 13 | 14 | 15 | 16 | 17 | 18 | 19 | 20 | 21 | 22 | 23 | 24 | 25 | 26 | 27 | 28 | 29 | 30 | 31 | 32 | 33 |
| 7/16" | 9/16" | 0·14 | 0·25 | No. 30 | K | 1 | 2 | 3 | 4 | 5 | 6 | 7 | 8 | 9 | 10 | 11 | 12 | 13 | 14 | 15 | 16 | 17 | 18 | 19 | 20 | 21 | 22 | 23 | 24 | 25 | 26 | 27 | 28 | 29 | 30 | 31 | 32 | 33 |
| 15/32" | 9/16" | 0·15 | 0·25 | No. 30 | L | 1 | 2 | 3 | 4 | 5 | 6 | 7 | 8 | 9 | 10 | 11 | 12 | 13 | 14 | 15 | 16 | 17 | 18 | 19 | 20 | 21 | 22 | 23 | 24 | 25 | 26 | 27 | 28 | 29 | 30 | 31 | 32 | 33 |
| ½" | 5/8" | 0·16 | 0·25 | No. 30 | M | 1 | 2 | 3 | 4 | 5 | 6 | 7 | 8 | 9 | 10 | 11 | 12 | 13 | 14 | 15 | 16 | 17 | 18 | 19 | 20 | 21 | 22 | 23 | 24 | 25 | 26 | 27 | 28 | 29 | 30 | 31 | 32 | 33 |

## TURNBUCKLES - TENSION ROD TYPE.

SPECN
S.P. 8.Y. - NON-STAINLESS STEEL.
S.P. 8.Z. STAINLESS STEEL.

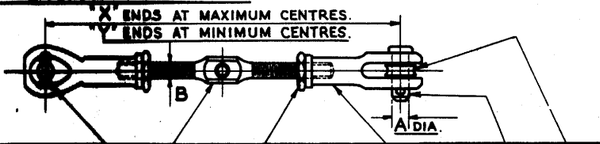


| SIZE OF CABLE (CWTS) | ADJUSTMENT "X"-"Y" (INS) | DIAM. OF HOLE "A" (INS) | DIA. OF TENSION ROD "B" (INS) | SPLIT PIN. AGS.784 | TENSION ROD. S.8.Y. M.S. S.8.Z. S.S. | LOCK NUTS. A.16.Y. - M.S. A.16.Z. - S.S. L.H. | LOCK NUTS. A.16.Y. - M.S. A.16.Z. - S.S. R.H. | FORK ENDS S.P.3.Y. - M.S. S.P.3.Z. - S.S. L.H. | FORK ENDS S.P.3.Y. - M.S. S.P.3.Z. - S.S. R.H. | H.T. PIN. S.P.4.Y.-M.S. S.P.4.Z.-S.S. | ROLLER. S.P.8.Y.-M.S. S.P.8.Z.-S.S. |
|---|---|---|---|---|---|---|---|---|---|---|---|
| – | – | – | | PART NUMBERS. | | | | | | | |
| 5 | ·9 | 5/32" | 4 B.A. | 1 | 1 | BTL | BT | 412L | 412 | A2 | 13 |
| 10 & 15 | 1·1 | 3/16" | 2 B.A. | 2 | 2 | CTL | CT | 413L | 413 | B3 | 14 |
| 25 | 1·2 | ¼" | 1/4" B.S.F. | 2 | 4 | ETL | ET | 414L | 414 | D6 | 16 |
| 35 & 45 | 1·4 | 11/32" | 5/16" B.S.F. | 10 | 6 | GTL | GT | 416L | 416 | G10 | 18 |
| 60, 70, 75 | 1·6 | 13/32" | 3/8" B.S.F. | 19 | 8 | JTL | JT | 418L | 418 | J12 | 20 |
| | | | | | | | | | | | |
| 120 | 1·75 | 17/32" | ½" B.S.F. | 20 | 12 | NTL | NT | 422L | 422 | N16 | 24 |

## FORK JOINTS

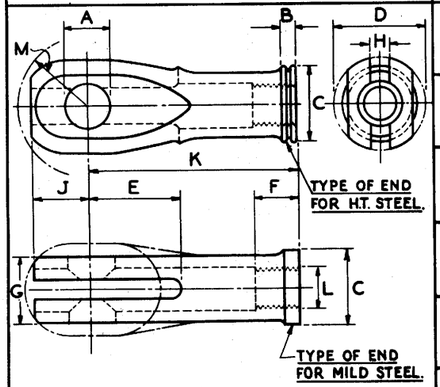


S.P. 3/Y. - MILD STEEL. - S.1.
S.P. 3/Z. - STAINLESS STEEL - S.61, S.62 OR S.80.
S.P. 7/Y. - H.T. STEEL. - S.2.
S.P. 7/Z. - STAINLESS STEEL. - S.80.

| SIZE OF FORK JOINT. | TYPE OF FORK JOINT. | PART Nº R.H. TH'D | PART Nº L.H. TH'D | Pt. Nº OF STANDARD PIN | MIN. ULT. TENSILE STRENGTH LBS. | APPROX. WEIGHT LBS. | A +·001 +·005 | B -·0 +·015 | C -·0 +·015 | D | E -·0 +·015 | F -·0 +·04 | G -·0 +·015 | H -·0 +·01 | J -·0 +·01 | K -·0 +·04 | L R.H. OR L.H. TH'D | M PIN DRILL RADIUS. |
|---|---|---|---|---|---|---|---|---|---|---|---|---|---|---|---|---|---|---|
| 4 B.A. | S.P.3. | 412 | 412 L | A2 | 1155 | ·010 | 5/32" | ·07 | ·28 | ·36 -·0 +·015 | ·35 | ·20 | ·26 | ·10 | ·19 | 1·1 | 4 B.A. | ·23 |
| | S.P.7. | B | BL | A2 | 1155 | ·010 | 5/32" | ·07 | ·28 | ·36 -·0 +·015 | ·30 | ·21 | ·25 | ·07 | ·18 | 1·20 | 4 B.A. | ·24 |
| 2 B.A. | S.P.3. | 413 | 413 L | B3 | 2090 | ·016 | 3/16" | ·08 | ·32 | ·48 -·0 +·015 | ·40 | ·25 | ·33 | ·15 | ·24 | 1·3 | 2 B.A. | ·31 |
| | S.P.7. | C | CL | B3 | 2090 | ·015 | 3/16" | ·08 | [illegible] | ·44 -·0 +·015 | ·35 | ·24 | ·30 | ·10 | ·22 | 1·3 | 2 B.A. | ·28 |
| ¼" B.S.F. | S.P.3. | 414 | 414 L | D6 | 3795 | ·046 | ¼" | ·11 | [illegible] | [illegible] -·010 +·005 | ·50 | ·30 | ·46 | ·20 | ·30 | 1·5 | ¼" B.S.F. | ·39 |
| | S.P.7. | E | EL | D5 | 3795 | ·045 | ¼" | ·11 | ·45 | ·56 -·0 +·015 | ·50 | ·33 | ·41 | ·125 | ·30 | 1·53 | ¼" B.S.F. | ·37 |
| 5/16" B.S.F. | S.P.3. | 416 | 416 L | G10 | 6270 | ·104 | 11/32" | ·12 | ·56 | ·86 -·0 +·015 | ·70 | ·35 | ·68 | ·25 | ·37 | 1·85 | 5/16" B.S.F. | ·50 |
| | S.P.7. | G | GL | G7 | 6270 | ·095 | 11/32" | ·12 | ·55 | ·79 -·0 +·015 | ·65 | ·40 | ·50 | ·14 | ·40 | 1·74 | 5/16" B.S.F. | ·49 |
| 3/8" B.S.F. | S.P.3. | 418 | 418 L | J12 | 9350 | ·168 | 13/32" | ·15 | ·66 | 1·0 -·010 +·005 | ·80 | ·40 | ·78 | ·30 | ·44 | 2·1 | 3/8" B.S.F. | ·62 |
| | S.P.7. | J | JL | J9 | 9350 | ·140 | 13/32" | ·15 | ·67 | ·82 -·0 +·015 | ·75 | ·48 | ·60 | ·17 | ·48 | 1·95 | 3/8" B.S.F. | ·57 |
| 7/16" B.S.F. | S.P.3. | 420 | 420 L | L13 | 12980 | ·250 | 15/32" | ·15 | ·76 | 1·14 -·0 +·015 | 1·0 | ·45 | ·83 | ·36 | ·58 | 2·45 | 7/16" B.S.F. | ·74 |
| | S.P.7. | L | LL | L10 | 12980 | ·195 | 15/32" | ·15 | ·76 | ·92 -·0 +·015 | ·90 | ·54 | ·68 | ·188 | ·59 | 2·15 | 7/16" B.S.F. | ·69 |
| ½" B.S.F. | S.P.3. | 422 | 422 L | N16 | 17050 | ·334 | 17/32" | ·15 | ·85 | 1·25 -·020 +·0 | 1·17 | ·55 | ·98 | ·40 | ·64 | 2·7 | ½" B.S.F. | ·81 |
| | S.P.7. | N | NL | N13 | 17050 | ·270 | 17/32" | ·15 | ·85 | 1·06 -·0 +·015 | 1·05 | ·60 | ·77 | ·25 | ·67 | 2·35 | ½" B.S.F. | ·78 |

## TENSION RODS.

SPECN
S.P. 8.Y. - H.T. STEEL - S.2. OR S.11.
S.P. 8.Z. - STAINLESS STEEL - S.80.

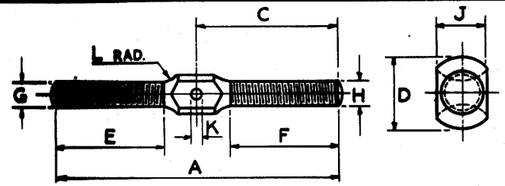


| SIZE OF CABLE (CWTS) | PART Nº | A -·0 +·08 | C -·0 +·04 | D -·0 +·015 | E -·0 +·125 | F -·0 +·125 | G LT. HD. TH'D | H RT. HD TH'D. | J -·0 +·015 | K | L |
|---|---|---|---|---|---|---|---|---|---|---|---|
| 5 | 1 | 2·86 | 1·43 | ·28 | ·89 | ·89 | 4 B.A. | 4 B.A. | ·19 | 7/64" | ·10 |
| 10 & 15 | 2 | 3·2 | 1·6 | ·30 | 1·06 | 1·06 | 2 B.A. | 2 B.A. | ·19 | 5/32" | ·10 |
| 25 | 4 | 3·46 | 1·73 | ·36 | 1·18 | 1·18 | ¼" B.S.F. | ¼" B.S.F. | ·27 | 5/32" | ·12 |
| 35 | 4A | 3·68 | 1·91 | ·36 | 1·18 | 1·35 | ¼" B.S.F. | 5/16" B.S.F. | ·32 | 5/32" | ·12 |
| 45 | 6 | 4·0 | 2·0 | ·46 | 1·35 | 1·35 | 5/16" B.S.F. | 5/16" B.S.F. | ·32 | 3/16" | ·12 |
| 75 | 8 | 4·52 | 2·26 | ·46 | 1·51 | 1·51 | 3/8" B.S.F. | 3/8" B.S.F. | ·38 | 3/16" | ·12 |
| 120 | 12 | 5·30 | 2·65 | ·56 | 1·79 | 1·79 | ½" B.S.F. | ½" B.S.F. | ·50 | 3/16" | ·12 |

## ROLLERS

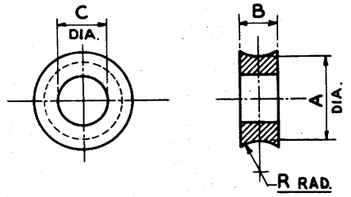


S.P. 8.Y. - STEEL - S.1. OR
S.P. 8.Z. - STAINLESS STEEL - S.80.

| ITEM Nº | A -·0 +·015 | B +·001 -·005 | C +·001 +·005 | RADIUS R |
|---|---|---|---|---|
| 13 | ·266 | ·095 | 5/32" | ·075 |
| 14 | ·338 | ·145 | 3/16" | ·10 |
| 16 | ·428 | ·195 | ¼" | ·15 |
| 18 | ·520 | ·24 | 11/32" | ·20 |
| 20 | ·576 | ·29 | 13/32" | ·20 |
| 24 | ·825 | ·38 | 17/32" | ·25 |

## METHOD OF CALLING UP ON DRAWING

| | | |
|---|---|---|
| STEEL PINS S.P. 4. | A ½" DIA. H.T.S. PIN 1" LONG :- (S.P.4.Y. M.16.) PIN H.T. STEEL 1" LONG. | A ½" DIA. STAINLESS STEEL PIN 1" LONG. (S.P.4.Z. M.16.) PIN STAINLESS STEEL 1" LONG. |
| FORK JOINTS S.P.3. & S.P.7. | A ⅜" B.S.F. R.H. H.T. STEEL FORK JOINT :- (S.P. 7. E.) FORK JOINT ¼" B.S.F. | A ⅜" B.S.F. L.H. MILD STEEL FORK JOINT :- (S.P.3. 418.L.) FORK JOINT. L.H. ⅜" B.S.F. |
| ROLLERS S.P. 8. | A MILD STEEL ROLLER. ITEM Nº 14 :- (S.P.8.Y. /14.) ROLLER. | A STAINLESS STEEL ROLLER ITEM Nº 16 :- (S.P.8.Z. /16.) ROLLER. |
| TENSION RODS S.P. 8. | A H.T. STEEL 5 CWT TENSION ROD :- (S.P.8.Y. /1.) TENSION ROD 5 CWT. | A STAINLESS STEEL 45 CWT. TENSION ROD :- (S.P.8.Z. /6.) TENSION ROD 45 CWT. |

TURNBUCKLES. WHEN CALLING FOR COMPLETE TENSION ROD TYPE TURNBUCKLES, THE COMPONENT PARTS MUST BE CALLED UP SEPARATELY AS SHOWN IN TABLE.

| ISSUE Nº | DATE |
|---|---|
| 1 | |
| | |
| | |
| | |
| | |
| COMPILED | B.P. WILSON |
| TRACED | GARNET & Co 20. 8. 46. |
| APPROVED. | A.B. Baker |

TURNBUCKLES, FORK ENDS, H.T.S. PINS.

DRAWING OFFICE DATA SHEET Nº 1/17

# THE DE HAVILLAND AIRCRAFT COMPANY LTD., HATFIELD HERTS.

BALL RACE TYPICAL TO C.B.S.2. & 402266 ILLUSTRATED.

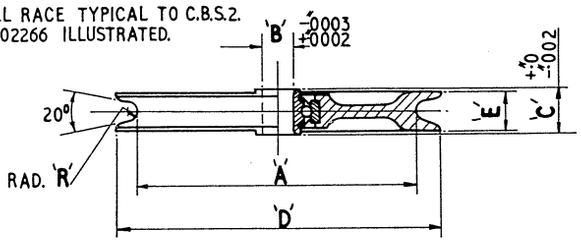


MATERIAL:- REINFORCED POWDER MOULDING.

| SUIT CABLE SIZE (CWTS) | PART NUMBER | NOM. DIA. 'A' | BORE 'B' | BEARING WIDTH 'C' | DIA. 'D' | WIDTH 'E' | CABLE GROOVE RAD. 'R' | BEARING PART NUMBER S.K.F. |
|---|---|---|---|---|---|---|---|---|
| 5 | A.S. 111 | 1".15 | ".25 | ".3125 | 1".4 | ".25 | ".06 | C.B.S.2 |
| 5 & 10 | A.S. 103 | 2".0 | ".375 | ".50 | 2".4 | ".37 | ".08 | 402266 |
| 10,15&20 | A.S. 104 | 3".0 | ".375 | ".50 | 3".5 | ".41 | ".095 | 402266 |
| 20,25 | A.S. 105 | 4".0 | ".50 | ".625 | 4".6 | ".41 | ".12 | 401458 |
| & 35 | A.S. 106 | 5".0 | ".50 | ".625 | 5".6 | ".47 | ".12 | 401458 |

NOTES.

1. METAL PULLEYS SHOULD BE USED IN ALL PRIMARY CONTROL APPLICATIONS & IN OTHER CASES AT THE DISCRETION OF THE DESIGNER IN CHARGE.
2. FOR STANDARD 6 1/2" NOMINAL DIA. PULLEY FITTED WITH 2 TORQUE TUBE TYPE RACES & SUITABLE FOR USE WITH 100 CWT. CABLE SEE D.H.S. 318.
3. THE FORGING BLANKS & ALSO THE BALL RACE RETAINING PLATES (D.H.S. 800 & D.H.S. 793) FOR D.H.S. PULLEYS CAN BE USED IN OTHER APPLICATIONS.

CABLE GROOVE DHS 515/-

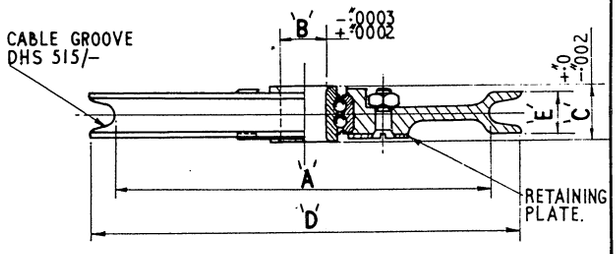


MATERIAL:- ALUM ALLOY FORGING
SPEC:- L 65

BALL RACE 401458CI ILLUSTRATED

| SUIT CABLE SIZE (CWTS) | PART NUMBER | NOM. DIA. 'A' | BORE 'B' | BEARING WIDTH 'C' | DIA. 'D' | WIDTH 'E' | CABLE GROOVE PART NUMBER | BEARING PART NUMBER S.K.F. |
|---|---|---|---|---|---|---|---|---|
| 15 & 20 | D.H.S.794/20 | 2".5 | ".375 | ".50 | 3".0 | ".32 | D.H.S. 515-3 | 402266 |
| | | | | | | | | |
| 15 & 20 | D.H.S.797/20 | 3".0 | ".375 | ".50 | 3".5 | ".32 | D.H.S. 515-3 | 402266 |
| 20 & 25 | D.H.S. 801 | 3".5 | ".50 | ".625 | 4".0 | ".41 | D.H.S. 513-4 | 401458 CI |
| 20,25 & 35 | D.H.S.790 | 4".0 | ".50 | ".625 | 4".6 | ".47 | D.H.S. 515-5 | 401458 CI |
| | | | | | | | | |
| 45 | D.H.S.784/45 | 5".0 | ".50 | ".625 | 5".6 | ".50 | D.H.S. 515-6 | 401458 CI |
| 60 | D.H.S.784/60 | 5".0 | ".50 | ".625 | 5".7 | ".50 | D.H.S. 515-7 | 401458 CI |
| 60 | D.H.S.787/60 | 5".5 | ".50 | ".625 | 6".2 | ".50 | D.H.S. 515-7 | 401458 CI |
| 80 | D.H.S.787/80 | 5".5 | ".50 | ".625 | 6".24 | ".56 | D.H.S. 515-8 | 401458 CI |
| | | | | | | | | |

RIVETED OR SPUN OVER TO FORM FLAT SURFACE. 15 CWT CABLE SIZE IS FINISHED FLUSH TO WASHER.

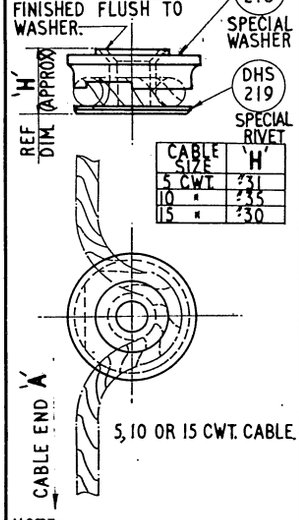


| CABLE SIZE | 'H' |
|---|---|
| 5 CWT | ".31 |
| 10 " | ".35 |
| 15 " | ".30 |

NOTE:-
IT IS ESSENTIAL THAT D.H.S. 218 IS ASSEMBLED IN THE CORRECT RELATIONSHIP TO CABLE END 'A' i.e. END 'A' TO THE LEFT, CABLE LOOPED DOWNWARDS AND D.H.S. 218 ON TOP.
THIS INFORMATION IS TO BE CLEARLY GIVEN ON CABLE DRG.

DETAIL OF TYPICAL PULLEY.

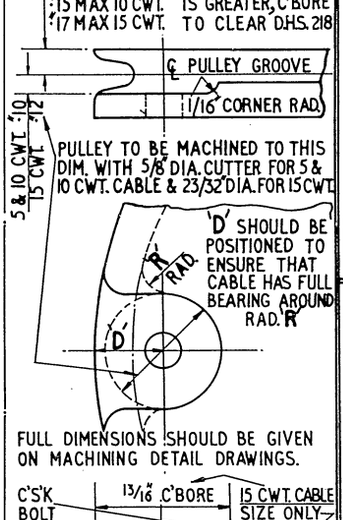


FULL DIMENSIONS SHOULD BE GIVEN ON MACHINING DETAIL DRAWINGS.

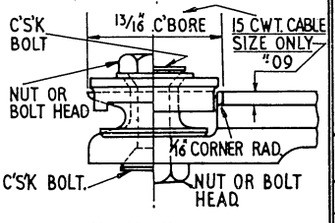


ALTERNATIVE METHODS OF ATTACHT.

SHROUDED PULLEYS FOR 5 CWT. CABLE.

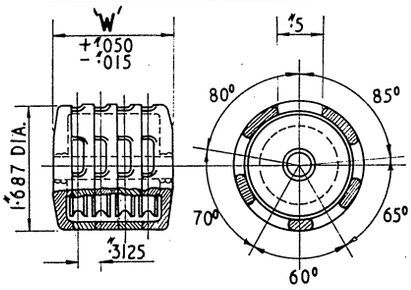


| PART NUMBER | No. OF PULLEYS | OVERALL WIDTH 'W' |
|---|---|---|
| A.S.1151 | 1 | ".625 |
| A.S.1152 | 2 | ".937 |
| A.S.1153 | 3 | 1".25 |
| A.S.1154 | 4 | 1".562 |

CABLE TO PULLEY ANCHORAGE 5, 10 & 15 CWT. CABLE.

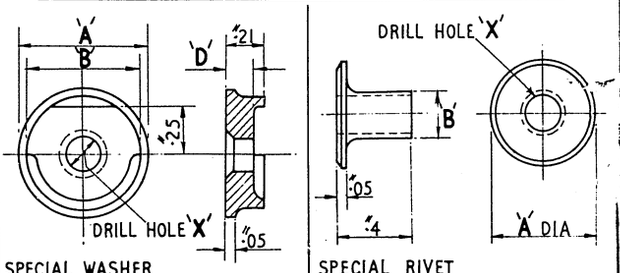


SPECIAL WASHER

SPECIAL RIVET

| PART NUMBER | TO SUIT CABLE | DIA. 'A' | DIA. 'B' | DIM. 'D' | DRILL 'X' | PART NUMBER | TO SUIT CABLE | DIA. 'A' | DIA. 'B' | DRILL 'X' |
|---|---|---|---|---|---|---|---|---|---|---|
| D.H.S. 218 | 5 & 10 CWT. | 11/16" | ".6 | ".15 | 'F' | D.H.S. 219 | 5 & 10 CWT. | 9/16" | ".25 | No.11 |
| D.H.S.218/15 | 15 CWT. | ".78 | ".68 | ".10 | 'P' | D.H.S.219/15 | 15 CWT. | ".65 | ".31 | 'F' |

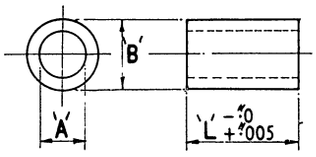


CLOSE TOLERANCE DISTANCE TUBES

MATERIAL:- ALUM ALLOY D.T.D. 423

| PART NUMBER | I/DIA 'A' (REAMED) | O/DIA 'B' |
|---|---|---|
| D.H.S. 329 | 3/8" ±.0004 | ".4995 ".4975 |
| D.H.S. 330 | 1/4" ±.0003 | ".3745 ".3725 |

METHOD OF CALLING UP LENGTH 'L' TO BE QUOTED AS ACTUAL LENGTH
e.g. D.H.S. 330/1.25
STANDARD DISTANCE TUBES SEE 1/4F

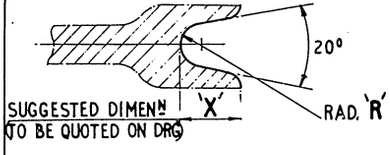


STANDARD CABLE GROOVES FOR MACH^NE PULLEYS

| GROOVE PART NUMBER | CABLE SIZE | DIM. 'X' | RAD. 'R' |
|---|---|---|---|
| D.H.S. 515-1 | 5 CWT. | ".12 | ".06 |
| D.H.S. 515-2 | 10 | ".18 | ".08 |
| D.H.S. 515-3 | 15 & 20 | ".22 | ".10 |
| D.H.S. 515-4 | 25 | ".27 | ".11 |
| D.H.S. 515-5 | 35 | ".30 | ".12 |
| D.H.S. 515-6 | 45 | ".30 | ".14 |
| D.H.S. 515-7 | 60 & 70 | ".35 | ".16 |
| D.H.S. 515-8 | 80 | ".37 | ".17 |
| D.H.S. 515-9 | 100 | ".42 | ".19 |
| D.H.S. 515-10 | 120 | ".50 | ".22 |
| D.H.S. 515-11 | 140 & 160 | ".55 | ".24 |

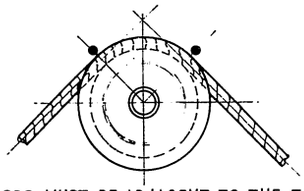

1. CABLE GUARDS MUST BE ADJACENT TO THE TANGENT POINT OF THE CABLE WHERE IT LEAVES THE PULLEY & SHOULD BE CLOSE TO THE PULLEY. RECOMMENDED CLEARANCE IS ".03 MAX. FOR 5 & 10 CWT. & ".05 MAX. FOR LARGER.
2. ADEQUATE CLEARANCE MUST BE PROVIDED BETWEEN THE PULLEY RIM & ADJACENT STRUCTURE OR PULLEYS. A MINIMUM OF ".125 PER PULLEY IS RECOMMENDED.
3. A BANK OF MORE THAN FOUR PULLEYS SHOULD NOT BE MOUNTED WITHOUT INTERMEDIATE SUPPORT.
4. A STIFFNUT MUST NOT BE USED FOR ANY SINGLE POINT ATTACHMENT IN THE CONTROL SYSTEM i.e. CABLE GUARD. A SLOTTED NUT & SPLIT PIN MUST BE USED.

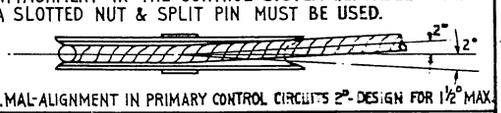


MAX. MAL-ALIGNMENT IN PRIMARY CONTROL CIRCUITS 2° - DESIGN FOR 1½° MAX.

| ISSUE Nº | DATE |
|---|---|
| 3 | JUNE '54 |
| 4 | MARCH '55 |
| | |
| | |
| | |

COMPILED: L. SPENCER
TRACED: M.T.
APPROVED:

# PULLEYS

DRAWING OFFICE DATA SHEET NO. 1/18

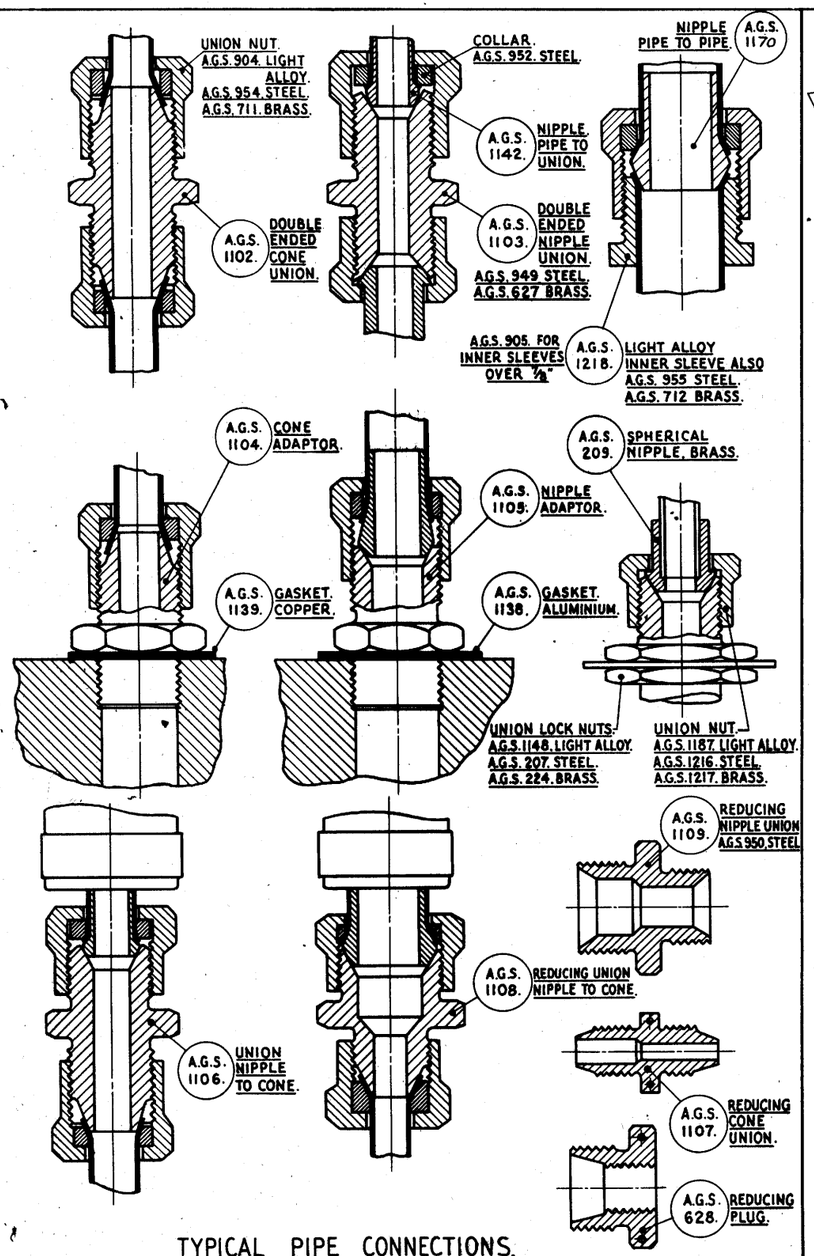


TYPICAL PIPE CONNECTIONS.

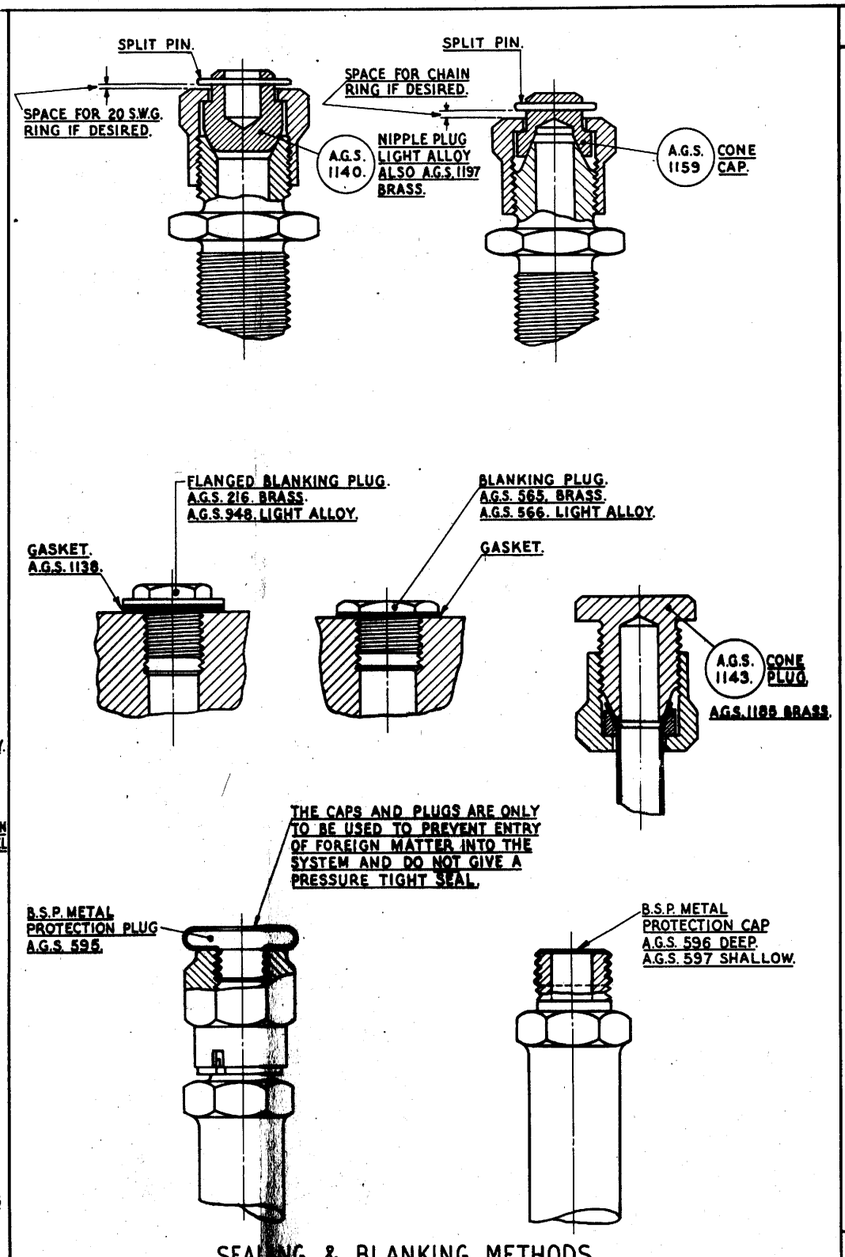


SEALING & BLANKING METHODS.

| ISSUE No. | DATE |
|---|---|
| 1 | |
| | |
| | |
| | |
| | |
| | |
| | |
| COMPILED | |
| B.P. WILSON | |
| TRACED | |
| GARNETT & Co 22-8-46 | |
| APPROVED | |

THE DE HAVILLAND AIRCRAFT COMPANY LTD. HATFIELD. HERTS.

## GENERAL NOTES ON PIPE CONNECTIONS.

### STANDARD COUPLINGS.

THE PIPE COUPLINGS ILLUSTRATED ON THESE SHEETS INDICATE THE STANDARD FORMS OF PIPE COUPLINGS WHICH ARE AVAILABLE AND WHICH MUST BE USED WHEREVER PRACTICABLE. REF. A.D.M. 500/13. (FOR MORE DETAILED EXAMPLES SEE S.I.S. 56.)

THE CONE ENDED JOINT SHOULD BE USED AS THE STANDARD JOINT FOR ALL PIPES UP TO 1/2" DIA. EXCEPT WHERE CONNECTION IS REQUIRED TO BE MADE TO A COMPONENT NOT PROVIDED WITH THIS TYPE OF END.

NIPPLE JOINTS ARE TO BE USED FOR PIPES FROM 5/8" TO 1 1/2".

### PRESSURES.

THE A.G.S. 1100 RANGE ILLUSTRATED ARE CAPABLE OF WITHSTANDING THE FOLLOWING WORKING PRESSURE.

0 - 1/2" B.S.P. ..... 3000 LBS/INS.
5/8" - 1" B.S.P. ..... 500 LBS/INS.
1 1/4" - 1 1/2" B.S.P. ..... 200 LBS/INS.

### PIPES.

THE PIPES TO BE USED WITH THESE COUPLINGS ARE :-

**HIGH PRESSURE.**

TUNGUM ..... SPECN D.T.D. 323. (2500 LBS/IN² MAX.)
TIN IRON BRASS ..... SPECN D.T.D. 318. (4000 LBS/IN² MAX.)
NICKEL COPPER ALLOY ..... SPECN D.T.D. 477. (4500 LBS/IN² MAX.)
STEEL ..... SPECN D.T.D. 503. (4500 LBS/IN² MAX.)

**LOW PRESSURE.** { 500 LBS/IN² MAX. UP TO AND INCLUDING 1" O/DIA.
200 LBS/IN² MAX. 1 1/4" O/DIA. AND 1 1/2" O/DIA.

ANY OF THE ABOVE MATERIALS PLUS :-
LIGHT ALLOY ..... SPECN D.T.D. 310.
TUNGUM ..... SPECN D.T.D. 253.

### PERMISSIBLE PIPE DIAMETERS AND GAUGES.

| TYPE OF PIPE | OUTSIDE DIAMETER INS. | | | | | | | | | | | |
|---|---|---|---|---|---|---|---|---|---|---|---|---|
| | 3/16" | 1/4" | 5/16" | 3/8" | 7/16" | 1/2" | 5/8" | 3/4" | 7/8" | 1" | 1 1/4" | 1 1/2" |
| HIGH PRESSURE | 24<br>22 | 24<br>22 | 22 | 22 | 20 | 20 | | | | | | |
| LOW PRESSURE EXCEPT D.T.D. 310. | 24<br>22 | 24<br>22 | 22 | 22 | 20 | 20 | 20 | 20 | 20 | 20 | 20 | 20 |
| LOW PRESSURE D.T.D. 310. | 22 | 22 | 20 | 20 | 20 | 20 | 20 | 20 | 20 | 20 | 20 | 20 |

PIPES AND COUPLINGS FOR FUEL, OIL, AIR AND HYDRAULIC SERVICES MUST BE MANUFACTURED AND INSTALLED AS LAID DOWN IN S.I.S. 28.

SIMILARLY ALL PIPING FOR OXYGEN SYSTEMS IS TO BE MANUFACTURED AND INSPECTED TO S.I.S. 2610 AND S.I.S. 2611.

"ALL PIPE COUPLINGS TO BE WIRE LOCKED" MUST BE CALLED FOR ON RELEVANT DRAWINGS REF. ADM. 548. AND D.O.I. 10412.

PIPE CONNECTIONS. SHEET 1.

DRAWING OFFICE DATA SHEET No. 1/19A.

For Gaseous Hose Coupling
Ref. Dwg. A15 593.
8 Eic.1 1364

# HAVILLAND AIRCRAFT COMPANY LTD. HATFIELD. HERTS.

## GENERAL NOTES ON PIPE CONNECTIONS.

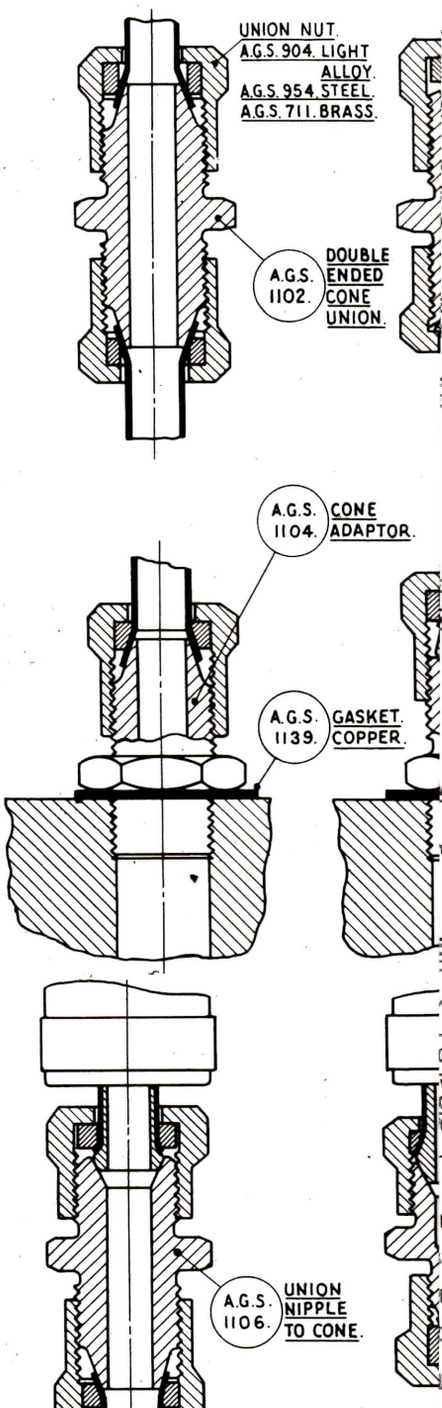


### ARD COUPLINGS.

PIPE COUPLINGS ILLUSTRATED ON THESE SHEETS INDICATE THE
RD FORMS OF PIPE COUPLINGS WHICH ARE AVAILABLE AND WHICH
USED WHEREVER PRACTICABLE. REF. A.D.M. 500/13.
RE DETAILED EXAMPLES SEE S.I.S. 56.)
CONE ENDED JOINT SHOULD BE USED AS THE STANDARD JOINT
PIPES UP TO ½" DIA. EXCEPT WHERE CONNECTION IS REQUIRED TO
TO A COMPONENT NOT PROVIDED WITH THIS TYPE OF END.
PLE JOINTS ARE TO BE USED FOR PIPES FROM ⅝" TO 1½".

### URES.

A.G.S. 1100 RANGE ILLUSTRATED ARE CAPABLE OF WITHSTANDING THE
NG WORKING PRESSURE.

0 - ½" B.S.P. ..... 3000 LBS/INS.
⅝" - 1" B.S.P. ..... 500 LBS/INS.
1¼" - 1½" B.S.P. ..... 200 LBS/INS.

PIPES TO BE USED WITH THESE COUPLINGS ARE :-

### H PRESSURE.

TUNGUM ..... SPECN D.T.D. 323. (2500 LBS/IN² MAX.)
TIN IRON BRASS ..... SPECN D.T.D. 318. (4000 LBS/IN² MAX.)
NICKEL COPPER ALLOY ..... SPECN D.T.D. 477. (4500 LBS/IN² MAX.)
STEEL ..... SPECN D.T.D. 503. (4500 LBS/IN² MAX.)

### W PRESSURE. { 500 LBS/IN² MAX. UP TO AND INCLUDING 1" O/DIA. / 200 LBS/IN² MAX. 1¼" O/DIA. AND 1½" O/DIA.

Y OF THE ABOVE MATERIALS PLUS :-
LIGHT ALLOY ..... SPECN D.T.D. 310.
TUNGUM ..... SPECN D.T.D. 253.

### SSIBLE PIPE DIAMETERS AND GAUGES.

| PE OF PIPE | OUTSIDE DIAMETER INS. | | | | | | | | | | | |
|---|---|---|---|---|---|---|---|---|---|---|---|---|
| | 3/16" | 1/4" | 5/16" | 3/8" | 7/16" | 1/2" | 5/8" | 3/4" | 7/8" | 1" | 1¼" | 1½" |
| GH PRESSURE | 24<br>22 | 24<br>22 | 22 | 22 | 20 | 20 | | | | | | |
| W PRESSURE CEPT D.T.D. 310. | 24<br>22 | 24<br>22 | 22 | 22 | 20 | 20 | 20 | 20 | 20 | 20 | 20 | 20 |
| W PRESSURE D.T.D. 310. | 22 | 22 | 20 | 20 | 20 | 20 | 20 | 20 | 20 | 20 | 20 | 20 |

ES AND COUPLINGS FOR FUEL, OIL, AIR AND HYDRAULIC SERVICES
E MANUFACTURED AND INSTALLED AS LAID DOWN IN S.I.S. 28.
ILARLY ALL PIPING FOR OXYGEN SYSTEMS IS TO BE MANUFACTURED
INSPECTED TO S.I.S. 2610 AND S.I.S. 2611.

PIPE COUPLINGS TO BE WIRE LOCKED" MUST BE
D FOR ON RELEVANT DRAWINGS REF. ADM. 548.
.O.I. 10412.

57

| ISSUE Nº | DATE |
|---|---|
| 1 | |
| | |
| | |
| | |
| | |
| | |

COMPILED
B.P. WILSON
TRACED
GARNET & Cº 22 · 8 · 46
APPROVED
A.B. Bobe

TYPICAL PIPE PE CONNECTIONS. SHEET 1.

DRAWING OFFICE DATA SHEET Nº 1/19A.

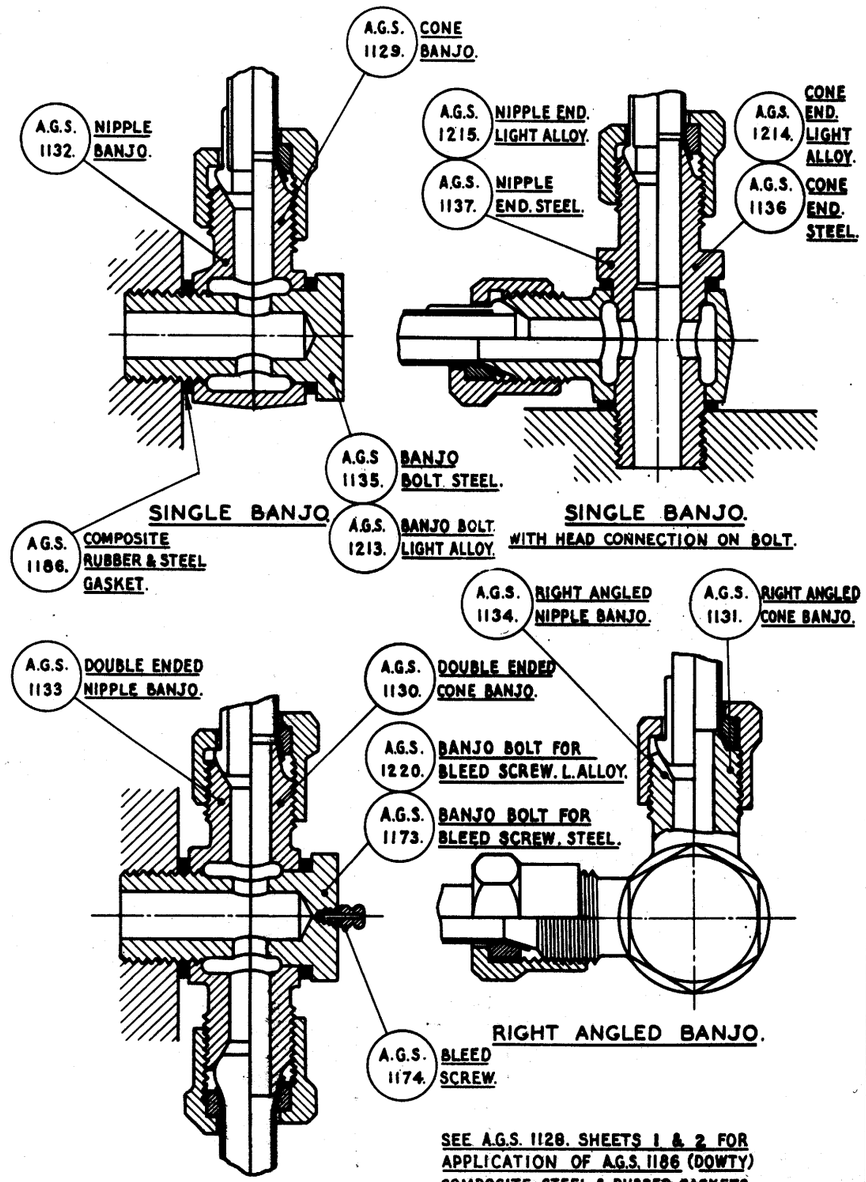


BANJO CONNECTIONS.

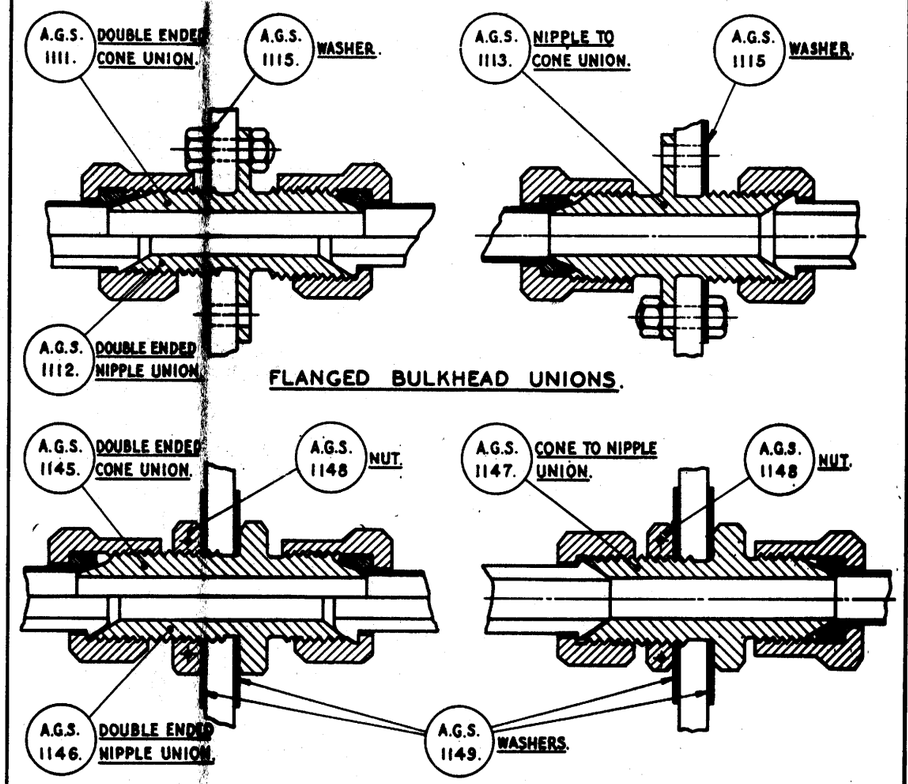


THESE BULKHEAD UNIONS ARE FOR USE WITH BULKHEADS NOT EXCEEDING ·25 THICK. THE FIXING BOLTS ON THE FLANGED UNIONS ARE 4 B.A. UP TO 3/8" B.S.P. AND 2 B.A. FOR SIZES ABOVE 3/8" B.S.P.
THE SIZE OF HOLE REQUIRED THROUGH BULKHEAD IS GIVEN BELOW

| OUTSIDE DIA. OF PIPE | 3/16" | 1/4" | 5/16" | 3/8" | 7/16" | 1/2" | 5/8" | 3/4" | 7/8" | 1 | 1 1/4" | 1 1/2" |
|---|---|---|---|---|---|---|---|---|---|---|---|---|
| DIAMETER OF HOLE IN BULKHEAD | 3/32" | 17/32" | 5/8" | 11/16" | 25/32" | 7/8" | 31/32" | 1 1/16" | 1 7/32" | 1 11/32" | 1 11/16" | 1 15/16" |

NOTE:- IN MANY OF THESE ILLUSTRATIONS ONE HALF IS SHOWN WITH A CONE ENDED JOINT. THE OTHER HALF IS SHOWN WITH A LOOSE OLIVE JOINT.

BULKHEAD CONNECTIONS.

THE DE HAVILLAND AIRCRAFT COMPANY LTD, HATFI

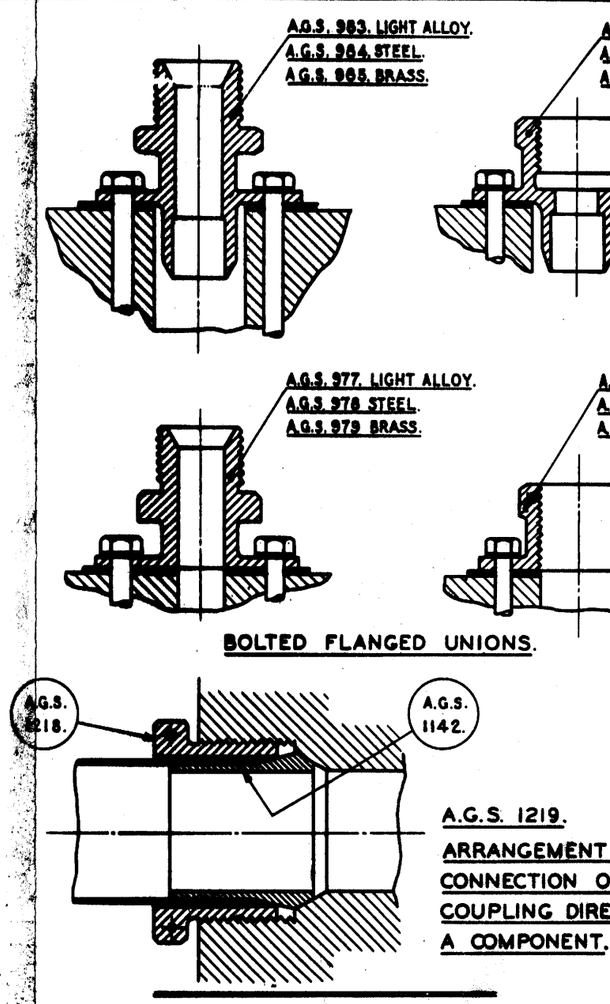


THE FOLLOWING TYPES OF UNION BODIES ARE ALSO A

| | | | |
|---|---|---|---|
| CONE ELBOW | A.G.S. 1116. | | |
| NIPPLE ELBOW | A.G.S. 1117. | | |
| EQUAL CONE TEE PIECE | A.G.S. 1118 | ALSO | A.G.S. 1198. BRASS. |
| UNEQUAL CONE TEE PIECE | A.G.S. 1120. | ALSO | A.G.S. 1195. BRASS. |
| EQUAL NIPPLE TEE PIECE | A.G.S. 1119. | | |
| UNEQUAL NIPPLE TEE PIECE | A.G.S. 1121. | ALSO | A.G.S. 1199 BRASS. |
| CONE TO NIPPLE TEE PIECE. | A.G.S. 1122. | | |
| 4 WAY EQUAL CONE BODY | A.G.S. 1123. | | |
| 4 WAY UNEQUAL CONE BODY | A.G.S. 1125. | ALSO | A.G.S. 1196 BRASS. |
| 4 WAY EQUAL NIPPLE BODY | A.G.S. 1124. | | |
| 4 WAY UNEQUAL NIPPLE BODY | A.G.S. 1126. | | |
| 4 WAY CONE TO NIPPLE BODY | A.G.S. 1127. | | |
| CHARGING VALVE | A.G.S. 1200. | | |

EQ EX SY

PIPE CONNECTIONS. SHEET 2.

DRAWI DATA S

| ISSUE No | DATE |
|---|---|
| 1 | |

COMPILED B.P. WILSON
TRACED GARNET & Co 21 - 8 - 46
APPROVED

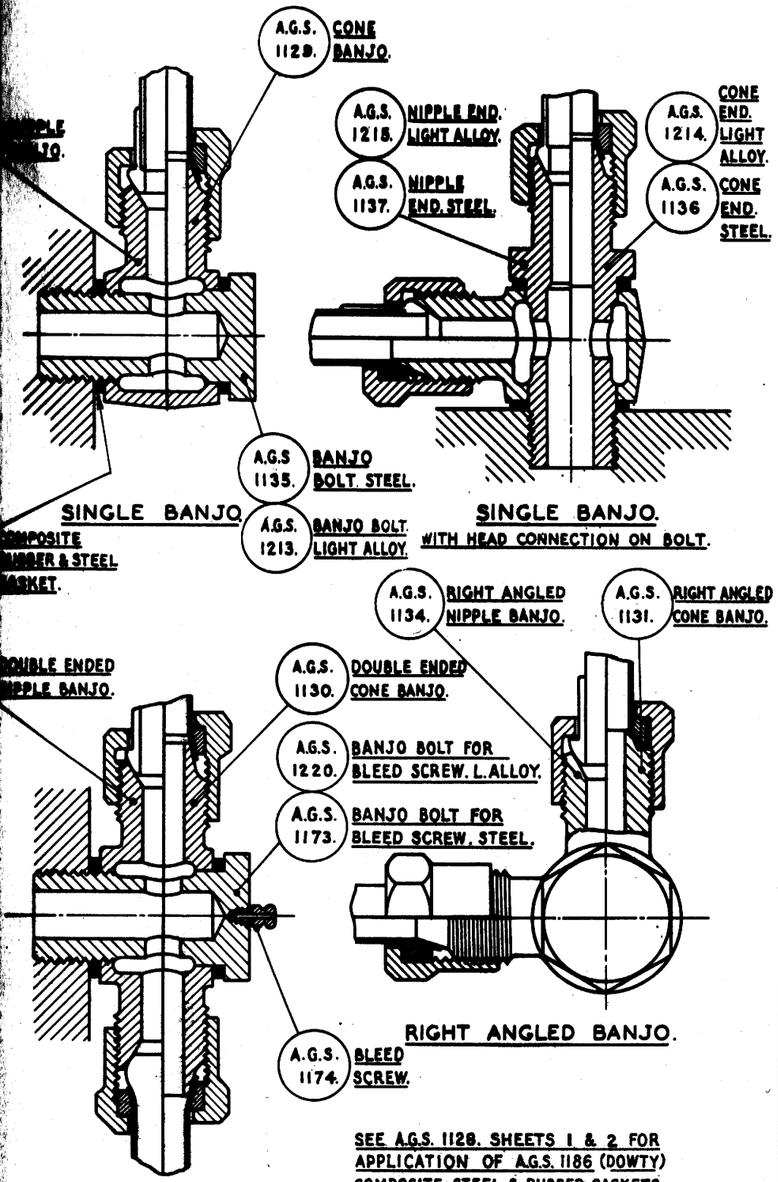


BANJO CONNECTIONS.

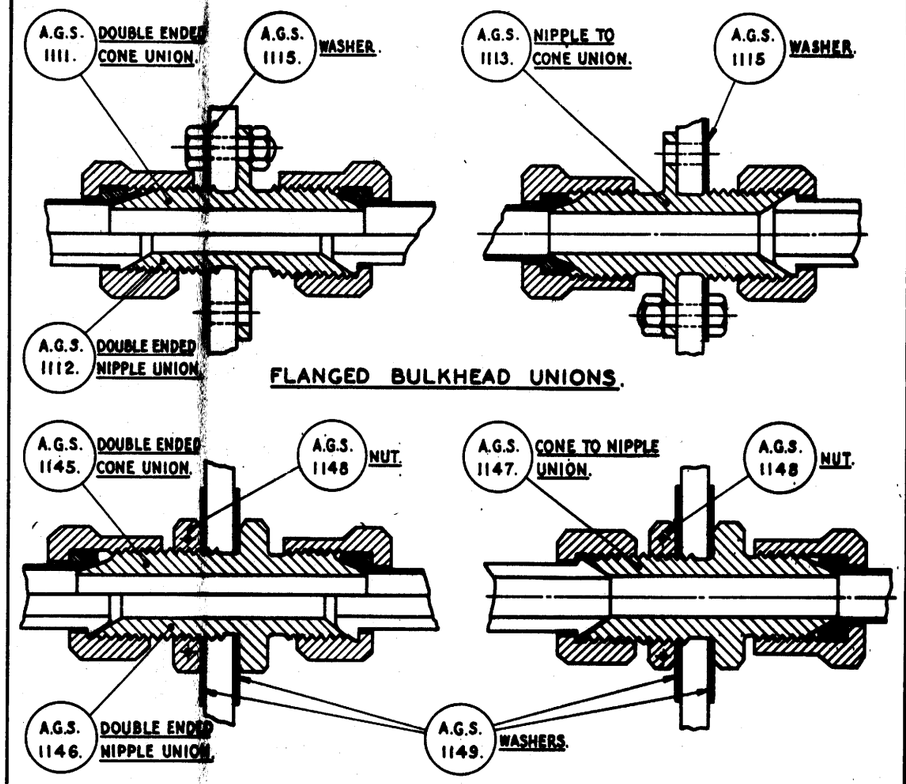


THESE BULKHEAD UNIONS ARE FOR USE WITH BULKHEADS NOT EXCEEDING ·25 THICK. THE FIXING BOLTS ON THE FLANGED UNIONS ARE 4 B.A. UP TO 3/8" B.S.P. AND 2 B.A. FOR SIZES ABOVE 3/8" B.S.P.
THE SIZE OF HOLE REQUIRED THROUGH BULKHEAD IS GIVEN BELOW

| OUTSIDE DIA. OF PIPE | 1/16" | 1/4" | 5/16" | 3/8" | 7/16" | 1/2" | 5/8" | 3/4" | 7/8" | 1 | 1 1/4" | 1 1/2" |
|---|---|---|---|---|---|---|---|---|---|---|---|---|
| DIAMETER OF HOLE IN BULKHEAD | 1/32" | 17/32" | 5/8" | 11/16" | 25/32" | 7/8" | 31/32" | 1 1/16" | 1 7/32" | 1 11/32" | 1 11/16" | 1 15/16" |

NOTE:- IN MANY OF THESE ILLUSTRATIONS ONE HALF IS SHOWN WITH A CONE ENDED JOINT. THE OTHER HALF IS SHOWN WITH A LOOSE OLIVE JOINT.

BULKHEAD CONNECTIONS.

THE DE HAVILLAND AIRCRAFT COMPANY LTD, HATFIELD. HERTS.

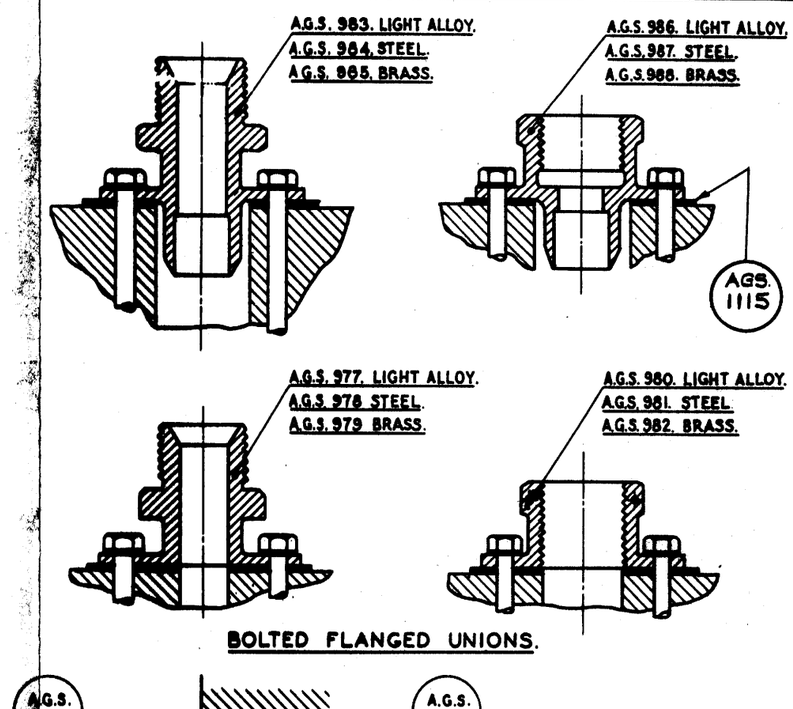


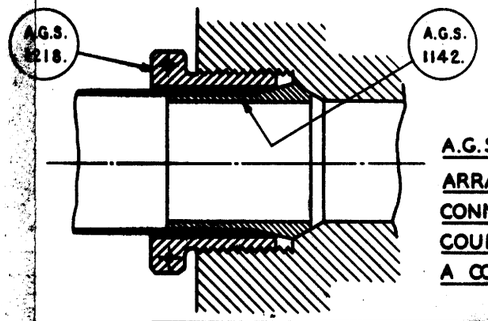


A.G.S. 1219.
ARRANGEMENT SHOWING CONNECTION OF PIPE COUPLING DIRECT ON TO A COMPONENT.

THE FOLLOWING TYPES OF UNION BODIES ARE ALSO AVAILABLE.

| | | | |
|---|---|---|---|
| CONE ELBOW | A.G.S. 1116. | | |
| NIPPLE ELBOW | A.G.S. 1117. | | |
| EQUAL CONE TEE PIECE | A.G.S. 1118 | ALSO A.G.S. 1198. BRASS. | FOR FIRE EXTINGUISHER SYSTEMS. |
| UNEQUAL CONE TEE PIECE | A.G.S. 1120. | ALSO A.G.S. 1195. BRASS. | |
| EQUAL NIPPLE TEE PIECE | A.G.S. 1119. | | |
| UNEQUAL NIPPLE TEE PIECE | A.G.S. 1121. | ALSO A.G.S. 1199 BRASS. | |
| CONE TO NIPPLE TEE PIECE. | A.G.S. 1122. | | |
| 4 WAY EQUAL CONE BODY | A.G.S. 1123. | | |
| 4 WAY UNEQUAL CONE BODY | A.G.S. 1125. | ALSO A.G.S. 1196 BRASS. | |
| 4 WAY EQUAL NIPPLE BODY | A.G.S. 1124. | | |
| 4 WAY UNEQUAL NIPPLE BODY | A.G.S. 1126. | | |
| 4 WAY CONE TO NIPPLE BODY | A.G.S. 1127. | | |
| CHARGING VALVE | A.G.S. 1200. | | |

PIPE CONNECTIONS. SHEET 2.

DRAWING OFFICE 17/
DATA SHEET Nº 198.

# THE DE HAVILLAND AIRCRAFT COMPANY LTD., HATFIELD, HERTS.

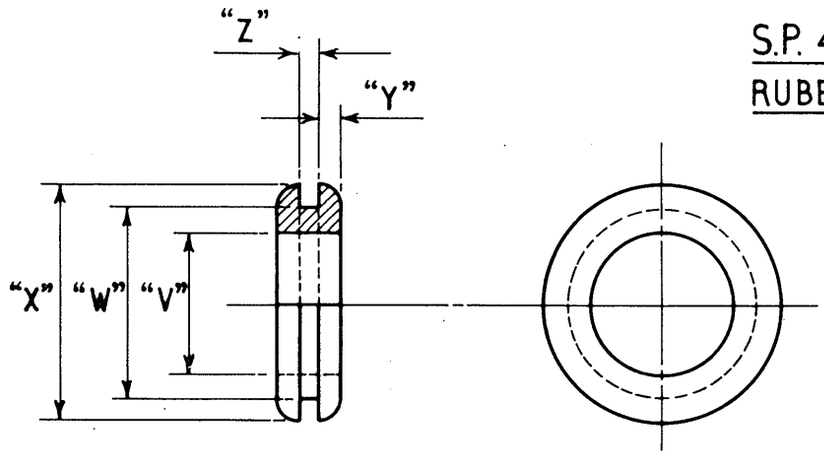


## S.P. 40.
## RUBBER GROMMETS.

| BORE "V" INS. | DIA. "W" INS. | O/DIA. "X" INS. | THICKNESS "Y" INS. | "Z" WIDTH OF SLOT ".04 | ".07 | ".10 | ".15 | ".20 | ".25 |
|---|---|---|---|---|---|---|---|---|---|
| | | | | PART NUMBERS | | | | | |
| 1/8 | 1/4 | ·375 | ·094 | A 4 | B 4 | C 4 | D 4 | E 4 | F 4 |
| 3/16 | 5/16 | ·438 | ·094 | A 6 | B 6 | C 6 | D 6 | E 6 | F 6 |
| 1/4 | 3/8 | ·5 | ·094 | A 8 | B 8 | C 8 | D 8 | E 8 | F 8 |
| 5/16 | 7/16 | ·625 | ·125 | A 10 | B 10 | C 10 | D 10 | E 10 | F 10 |
| 3/8 | 1/2 | ·688 | ·125 | A 12 | B 12 | C 12 | D 12 | E 12 | F 12 |
| 7/16 | 5/8 | ·813 | ·125 | A 14 | B 14 | C 14 | D 14 | E 14 | F 14 |
| 1/2 | 11/16 | ·875 | ·125 | A 16 | B 16 | C 16 | D 16 | E 16 | F 16 |
| 9/16 | 3/4 | 1·0 | ·125 | A 18 | B 18 | C 18 | D 18 | E 18 | F 18 |
| 5/8 | 13/16 | 1·063 | ·125 | A 20 | B 20 | C 20 | D 20 | E 20 | F 20 |
| 11/16 | 15/16 | 1·188 | ·125 | A 22 | B 22 | C 22 | D 22 | E 22 | F 22 |
| 3/4 | 1 | 1·25 | ·125 | A 24 | B 24 | C 24 | D 24 | E 24 | F 24 |
| 7/8 | 1 1/8 | 1·438 | ·156 | A 28 | B 28 | C 28 | D 28 | E 28 | F 28 |
| 1 | 1 1/4 | 1·563 | ·156 | A 32 | B 32 | C 32 | D 32 | E 32 | F 32 |
| 1 1/8 | 1 3/8 | 1·688 | ·156 | A 36 | B 36 | C 36 | D 36 | E 36 | F 36 |
| 1 1/4 | 1 1/2 | 1·813 | ·156 | A 40 | B 40 | C 40 | D 40 | E 40 | F 40 |
| 1 3/8 | 1 5/8 | 1·938 | ·156 | A 44 | B 44 | C 44 | D 44 | E 44 | F 44 |
| 1 1/2 | 1 3/4 | 2·125 | ·188 | A 48 | B 48 | C 48 | D 48 | E 48 | F 48 |
| 1 3/4 | 2 | 2·375 | ·188 | A 56 | B 56 | C 56 | D 56 | E 56 | F 56 |
| 2 | 2 1/4 | 2·625 | ·188 | A 64 | B 64 | C 64 | D 64 | E 64 | F 64 |

MATERIAL. SYNTHETIC RUBBER (FUEL RESISTANT)

SPECIFICATION. D.T.D. 560. GRADE "D". QUALITY "Q".

METHOD OF CALLING UP.

A RUBBER GROMMET WITH 1/2" BORE & ".1 SLOT WIDTH IS:- S.P. 40. C.16.

## BURLEY RUBBER SECTIONS

| DIA. "D" | SLOT "W" | |
|---|---|---|
| 1/4" | ".05 | |
| 1/4" | 1/16" | |
| 5/16" | ".05 | |
| 5/16" | ".075 | |
| 5/16" | ".10 | |

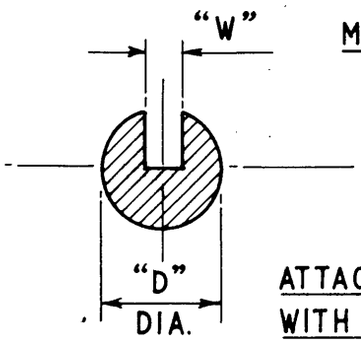


MATERIAL: NATURAL RUBBER.

ATTACH TO ALCLAD WITH BOSTIK "C."

METHOD OF CALLING UP.

EXAMPLE: "BURLEY RUBBER SECTION 5/16" DIA. WITH ".05 SLOT". (GIVE LENGTH REQD)

| ISSUE No | DATE |
|---|---|
| 1 | MAY '51 |
| | |
| | |
| | |
| | |

COMPILED: L. SPENCER.

TRACED: DOLTON DRAWING Co. 8 · 6 · 1951.

APPROVED:

GROMMETS

DRAWING OFFICE DATA SHEET No 1/21

ANODICALLY DYED LABELS SHOULD BE USED WHEREVER POSSIBLE IN PLACE OF ENGRAVED OR ETCHED LABELS, THESE LATTER BEING RESTRICTED TO SPECIAL APPLICATIONS WHERE THE ANODISED LABELS ARE NOT SUITABLE. D.H. STANDARD LABELS SUITABLE FOR SWITCHES ETC., SHOULD BE USED WHEREVER POSSIBLE.

MATERIAL.

1. THE MOST SUITABLE MATERIAL FOR ANODISED LABELS IS:- 'COMMERCIAL ANODISING ALUMINIUM'. THE GAUGE WILL DEPEND UPON THE SIZE OF THE LABEL AND ITS METHOD OF MOUNTING. FOR SMALL, WELL SUPPORTED LABELS, 24 S.W.G. IS SATISFACTORY.

2. AS ANODISED LABELS ARE PRODUCED IN THE FLAT IT IS IMPORTANT THAT SPECIALLY SHAPED LABELS ARE NOT SUBSEQUENTLY HEAT-TREATED TO FORM THEM TO THE REQUISITE SHAPE. TYPICAL EXAMPLES ARE:- CURVED THROTTLE GATES, WHERE THE LETTERING IS REQUIRED DIRECT ON TO THE COMPONENT. IN SUCH CASES THE MATERIAL SHOULD BE EITHER:-

a) ALCLAD, SPEC. L.72, WITH A SUFFICIENT FLANGE BEND RADIUS TO PERMIT BENDING WITHOUT HEAT TREATMENT (SEE DATA SHEET NO. 1/26B FOR THE BEND RADII.)

b) ALUMINIUM L.16 OR ALUMINIUM MANGANESE L.59 WHICH CAN BE MANIPULATED WITHOUT HEAT TREATMENT.

LETTERING.

ALMOST ANY SIZE OR TYPE OF LETTERING MAY BE USED AS THE LABELS ARE REPRODUCED PHOTOGRAPHICALLY. IT IS RECOMMENDED, HOWEVER, THAT FRACTIONAL SIZE TYPE BE ADHERED TO. SYMBOLS, SUCH AS ARROWS, CAN BE REPRODUCED, AND IF NECESSARY A COMPLETE LABEL CAN BE TAKEN FROM A GOOD ORIGINAL DRAWING.

COLOUR.

TWO COLOURS ONLY ARE PREFERRED BUT THREE COLOUR LABELS CAN BE PRODUCED, THE ANODISED BACKGROUND COUNTING AS ONE COLOUR.

WHEN THE LETTER SIZE IS BELOW 5/32", WHITE (SELF COLOUR) LETTERING ON A COLOURED BACKGROUND IS TO BE CALLED FOR, AS THE REVERSE RESULTS IN POORLY DEFINED LETTERING.

FOR LETTER SIZES ABOVE 5/32", WHITE LETTERING ON A COLOURED BACKGROUND IS PREFERABLE, BUT WHERE NECESSARY COLOURED LETTERING CAN BE PRODUCED.

METHOD OF CALLING-UP.

THE FOLLOWING INFORMATION IS REQUIRED ON LABEL DRAWINGS:-

1. MATERIAL.
2. SIZE AND COLOUR OF TYPE.
3. COLOUR OF BACKGROUND.
4. TO BE PRODUCED BY 'ANODIC DYEING PROCESS'.

| Issue No. | Date |
|---|---|
| 2 | AUG.'55 |
| | |
| | |
| | |
| | |

Compiled.

Traced.

Approved.

THE DE HAVILLAND AIRCRAFT COMPANY LTD., HATFIELD, HERTS.

## ENGRAVED LABELS.

THIS TYPE OF LABEL SHOULD ONLY BE USED WHEN SPECIFICALLY REQUESTED. THE MAIN OBJECTION TO ENGRAVED LABELS IS THAT THE ENGRAVING BECOMES FILLED WITH DIRT, OR IS DAMAGED. THE EXCEPTION TO THIS IS IN THE CLASS OF TRANSPARENT LABELS WHICH ARE ENGRAVED FROM THE BACK.

### COLOUR.

THE ENGRAVING CAN BE FILLED-IN TO ANY DESIRED COLOUR. THE BACKGROUND CAN BE NATURAL, PLATED, OR ANODISED TO A SUITABLE COLOUR.

### LETTERING.

THE FOLLOWING STANDARD TYPE SIZES MUST BE ADHERED TO:-

| LETTER SIZE. | | LETTER SIZE No. |
|---|---|---|
| 9/32" | ENGRAVING | No. 3 |
| 7/32" | ENGRAVING | No. 4 |
| 5/32" | ENGRAVING | No. 6 |
| 7/64" | ENGRAVING | No. 8 |
| 3/32" | ENGRAVING | No. 10 |
| 5/64" | ENGRAVING | No. 12 |
| 1/16" | ENGRAVING | No. 14 |
| 3/64" | ENGRAVING | No. 16 |

60

## ETCHED LABELS.

THESE LABELS ARE CHEMICALLY ETCHED AND ARE PARTICULARLY SUITABLE FOR LARGE INSTRUCTION PANELS WHERE A NUMBER OF DIFFERENT COLOURS ARE NECESSARY AND WHERE AN ANODICALLY DYED LABEL WOULD BECOME SCRATCHED AND DAMAGED.

### COLOUR.

THE BACKGROUND MAY BE NATURAL, PLATED, OR ANODISED TO A SUITABLE COLOUR. THE TYPE AND DIAGRAM CAN BE FILLED IN TO ANY DESIRED COLOUR.

### LETTERING.

ANY SUITABLE SIZE, TYPE AND CHARACTERS MAY BE EMPLOYED.

INSTRUCTION PANELS EMPLOYING THIS PROCESS SHOULD BE ACCURATELY DRAWN OUT, AS THE SUBSEQUENT TRACING IS PHOTOGRAPHED FOR RE-PRODUCTION.

DRAWINGS OF BOTH TYPES SHOULD QUOTE:-

(a) SIZE AND COLOUR OF LETTERING ETC.
(b) COLOUR OF BACKGROUND.
(c) MATERIAL.
(d) TYPE OF LABEL *i.e.* (a) ENGRAVED, (b) CHEMICALLY ETCHED.

SAMPLES OF BOTH LABELS ARE AVAILABLE FOR INSPECTION IN THE "STANDARDS" SECTION.

| ISSUE No. | DATE |
|---|---|
| | |
| | |
| | |
| | |
| | |
| | |

COMPILED BY: L. SPENCER

TRACED BY: GARNET & CO. 15-7-46

APPROVED BY: A.B. Bole

ENGRAVED & ETCHED LABELS.

DRAWING OFFICE DATA SHEET No. 1/24B

THE DE HAVILLAND AIRCRAFT COMPANY LTD., HATFIELD, HERTS.

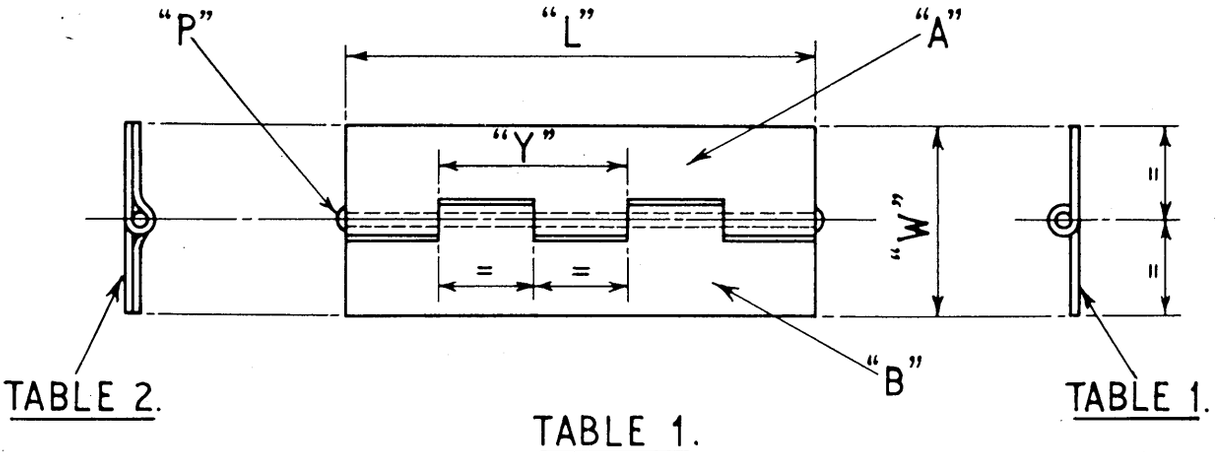


TABLE 1.

| PART Nº | WIDTH OPEN "W" ± ·01 | DIMENSION "Y" | FLANGE PLATES "A" & "B" | MATERIAL SPECN | PIN "P" | WEIGHT PER FOOT RUN |
|---|---|---|---|---|---|---|
| AS. 1876 | ·75 | 1·0 | 20 S.W.G. | D.T.D. 610 | 14 S.W.G. MILD STEEL | ·0617 LB. |
| AS 1877 | 1·0 | 1·0 | 20 S.W.G. | D.T.D. 610 | | ·0726 LB. |
| AS. 1878 | 1·25 | 1·0 | 18 S.W.G. | D.T.D. 610 | | ·104 LB. |
| AS. 1879 | 1·50 | 1·0 | 18 S.W.G. | D.T.D. 610 | | |

TABLE 2.

| PART Nº | WIDTH OPEN "W" ± ·015 | DIMENSION "Y" | FLANGE PLATES "A" & "B" | MATERIAL SPECN | PIN "P" | WEIGHT PER FOOT RUN |
|---|---|---|---|---|---|---|
| AS. 1880 | 1·5 | 2·5 | 20 S.W.G. | D.T.D. 610 | 10 S.W.G. MILD STEEL | ·175 LB. |

NOTE:- HINGES IN ALTERNATIVE MATERIALS OR WITH SPECIAL FLANGE WIDTHS CAN BE MADE TO ORDER.

## METHOD OF CALLING UP.

TABLE 1. LENGTH "L" WILL BE CALLED UP IN INCREMENTS OF ·5 *i.e.* 3·5, 4·0, 4·5 WITH A MAXIMUM LENGTH OF 72·0

EXAMPLE: A HINGE 1·0 WIDE 20 S.W.G. × 7·5 LONG WILL BE AS. 1877/75
A SIMILAR HINGE 60·0 LONG WOULD BE AS. 1877/600.

NOTE:- WHEN LENGTH "L" IS IN HALF INCHES (7·5) THIS WILL GIVE FULL END LOOPS.
WHEN LENGTH "L" IS IN WHOLE INCHES (7·0) THIS WILL GIVE HALF END LOOPS.

TABLE 2. LENGTH "L" WILL BE A MULTIPLE OF 1¼" AND QUOTED IN INCHES AND FRACTIONS OF AN INCH WITH A MAXIMUM LENGTH OF 71¼"

EXAMPLE: AS.1880/6¼ FOR "L" LENGTH OF 6¼" THIS WILL GIVE FULL END LOOPS.
AS.1880/10 FOR "L" LENGTH OF 10" THIS WILL GIVE HALF END LOOPS.

IN CASES WHERE A STRONGER HINGE IS REQUIRED FREE FROM THE SLACKNESS PRESENT IN THE FOLDED TYPES SHOWN ABOVE THESE SHOULD BE MACHINED FROM EXTRUDED HINGE SECTION. TYPICAL SECTIONS OF THIS TYPE ARE J.173 & J.290.

A STANDARD HINGE 1·75 LONG MADE FROM J.290 IS GIVEN ON D.H.S. 171.

IT IS RECOMMENDED THAT ON THESE SPECIAL HINGES, THE TOLERANCE ON THE DIMENSION OF THE GAPS & KNUCKLES SHOULD CONFORM TO THOSE SHOWN BELOW, AND THAT THE MAXIMUM LENGTH DOES NOT EXCEED 3·0

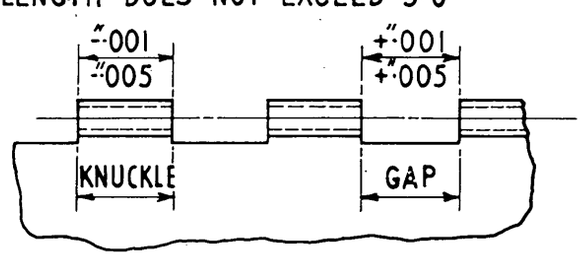


| ISSUE No. | DATE |
|---|---|
| 4 | JAN'53 |

COMPILED
L. SPENCER
TRACED
DOLTON DRG Co.
24·10·1952
APPROVED

# HINGES

DRAWING OFFICE DATA SHEET Nº 1/25

THE DE HAVILLAND AIRCRAFT COMPANY LTD., HATFIELD, HERTS.

THE BEND RADIUS IS AN IMPORTANT DIMENSION AND MUST BE QUOTED ON ALL DRAWINGS OF BENT FITTINGS, IN ORDER TO INDICATE THE RELEVANT HEAT TREATMENT AND ALSO TO CONTROL THE TEMPLATE DEVELOPMENT.

THE BEND RADIUS SHOULD BE GIVEN IN TERMS OF THE THICKNESS OF THE MATERIAL. *ie.* BEND RADIUS = 2T. AND NOT 2 G.

BEND RADII FOR VARIOUS MATERIALS ARE GIVEN BELOW:-

## MILD STEEL PLATE (SPECN S.3. S.84. D.T.D.124A. D.T.D. 659. ETC.)

BEND RADIUS = 1½ T. THIS MAY BE REDUCED TO 1T. IF ABSOLUTELY NECESSARY, BUT SUCH CASES SHOULD BE CONFINED TO S.84 OR D.T.D. 659.

## ALUMINIUM ALLOY SHEET.

### (i) CLAD SHEET TO SPECN D.T.D. 687.

THIS MATERIAL IS NORMALLY RECEIVED IN THE FULLY AGED AND PRECIPITATED CONDITION AND IT IS NOT RECOMMENDED THAT SHEETS SHOULD BE BENT IN THIS CONDITION.

IF FOR DESIGN CONSIDERATIONS IT IS NECESSARY TO BEND D.T.D. 687 IN THE 'AS RECEIVED' CONDITION *ie.* FULLY AGED, THE ABSOLUTE MINIMUM BEND RADII SHOWN IN THE TABLE ON DATA SHEET 1/26 B, MUST BE ADHERED TO. BEND RADII IN THE ANNEALED AND SOLUTIONISED CONDITION ARE ALSO QUOTED IN THE TABLE.

### (ii) CLAD SHEET TO SPECN D.T.D.610 & D.T.D. 546.

THIS MATERIAL IS ALSO RECEIVED IN THE FULLY HEAT TREATED CONDITION AND IT IS FREQUENTLY DESIRABLE TO BEND THE MATERIAL IN THIS CONDITION FOR TWO REASONS:-

(a) TO PREVENT EXCESSIVE DISTORTION WHICH RESULTS FROM THE SOLUTION TREATMENT OF LARGE PANELS SUCH AS BULKHEADS, RIBS WEBS ETC..

(b) IN THE CASE OF D.T.D. 546. TO AVOID THE LENGTHY PRECIPITATION HEAT TREATMENT WHICH IS NECESSARY ON THIS SPECIFICATION AFTER SOLUTIONISING.

## MAGNESIUM ALLOY SHEET (ELEKTRON) SPECN D.T.D. 118 & D.T.D. 120.

MINIMUM BEND RADII = 2½ T. THIS SHOULD BE INCREASED TO 3T. WHEREVER POSSIBLE.

FOR TABLE OF BEND ALLOWANCES FOR LOFT & WORKSHOP USE SEE DATA SHEET 1/26 B.

62

| ISSUE No | DATE |
|---|---|
| 1 | |
| | |
| | |
| | |
| | |
| | |

COMPILED
S. RAMSEY
TRACED
GARNET & Co
10. 10. 46
APPROVED

BENDING OF PLATES.

DRAWING OFFICE 1
DATA SHEET No 1/26A

THE DE HAVILLAND AIRCRAFT COMPANY LTD., HATFIELD, HERTS.

THE MINIMUM BEND RADII FOR SHEETS IN THE FULLY HEAT TREATED CONDITION (AS RECEIVED) AND ALSO IN THE ANNEALED AND SOLUTIONISED CONDITION ARE GIVEN BELOW; WHEREVER POSSIBLE LARGER BEND RADII SHOULD BE USED.

| MATERIAL | S. W. G. | MINIMUM BEND RADIUS FOR BENDS THROUGH 120° | |
|---|---|---|---|
| | | FULLY HEAT TREATED (AS RECEIVED) | ANNEALED OR SOLUTIONISED. |
| D.T.D. 610. D.T.D. 710. | 10 | 3½ T | 1½ T |
| | 12 | 3½ T | 1½ T |
| | 14 | 2½ T | 1 T |
| | 16 | 2½ T | 1 T |
| | 18 | 2 T | ½ T |
| | 20 | 2 T | ½ T |
| | 22 | 2 T | ½ T |
| | 24 | 2 T | ½ T |
| D.T.D. 546. D.T.D. 746 | 14 | | REVERTS TO D.T.D. 610 |
| | 16 | 3 T | |
| | 18 | 2½ T | |
| | 20 | 2½ T | |
| | 22 | 2 T | |
| | 24 | 2 T | |
| D.T.D. 687. * | 10 | 4 T | 2 T |
| | 12 | 4 T | 2 T |
| | 14 | 4 T | 2 T |
| | 16 | 4 T | 1½ T |
| | 18 | 3 T | 1½ T |
| | 20 | 3 T | 1 T |
| | 22 | 3 T | 1 T |
| | 24 | 3 T | 1 T |

THE BEND RADII GIVEN ABOVE ARE THE ABSOLUTE MINIMUM AND SHOULD BE MADE LARGER WHEREVER POSSIBLE BY AT LEAST ½ T.

* D.T.D. 687 SHOULD NOT BE BENT IN THE FULLY HEAT TREATED CONDITION UNLESS ABSOLUTELY NECESSARY AND THEN ONLY AFTER CONSULTING THE METHODS ENGINEERS.

DRAWINGS CALLING FOR D.T.D. 687 TO BE BENT SHOULD ALSO CALL FOR THE MATERIAL TO BE IN THE SOLUTIONISED CONDITION.

63

| ISSUE Nº | DATE |
|---|---|
| 1 | |
| 2 | |
| | |
| | |
| | |
| | |

COMPILED
S. RAMSEY
TRACED
GARNET & Cº 11. 10. 46
APPROVED
A B Bobe

BENDING OF PLATES.

DRAWING OFFICE DATA SHEET Nº 1/26B

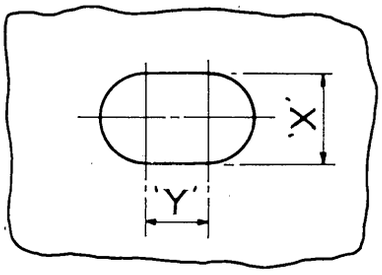


| NOMINAL SIZE OF SLOT | IDENTIFICATION LETTER | 'X' | RANGE OF 'Y' AVAILABLE RISING IN INCREMENTS OF 1/16TH OF AN INCH. | |
|---|---|---|---|---|
| | | | MIN. | MAX. |
| 4 B.A. | B | ·147" | 1/16" | 6" |
| 2 B.A. | C | ·191" | 1/16" | 6" |
| 1/4" | E | ·257" | 1/16" | 6" |
| 5/16" | G | ·316" | 1/16" | 6" |
| 3/8" | J | ·386" | 1/16" | 6" |

NOTE :- A RANGE OF STANDARD TOOLS IS AVAILABLE TO PRODUCE THE SLOTTED HOLES SHOWN ABOVE IN SHEET METAL FITTINGS.
WHERE SLOTTED HOLES ARE REQUIRED TO PERMIT ADJUSTMENT AND EASE OF ASSEMBLY THEY MUST CONFORM TO THE DIMENSIONS GIVEN.

64

## METHOD OF CALLING UP.

TO CALL UP A 4 B.A. SLOTTED HOLE WITH DIM. 'X' = ·147" & DIM. 'Y' = 1/4" :—

D.H.S. 508 ——— 4 ——— B.

| BASIC DRAWING NUMBER | 'Y' DIMENSION AS TABULATED IN 1/16 THS OF AN INCH. | IDENTIFICATION LETTER. |
|---|---|---|

COMPILED
S RAMSEY.
TRACED
GARNET & Co
23 9. 46
APPROVED

STANDARD SLOTTED HOLES.

DRAWING OFFICE DATA SHEET No 1/27.

| ISSUE No | 1 | 2 | | | | | | | | | | | |
|---|---|---|---|---|---|---|---|---|---|---|---|---|---|
| MOD. No | | 5.588 | | | | | | | | | | | |

THE DE HAVILLAND AIRCRAFT Co. LTD HATFIELD. HERTS.

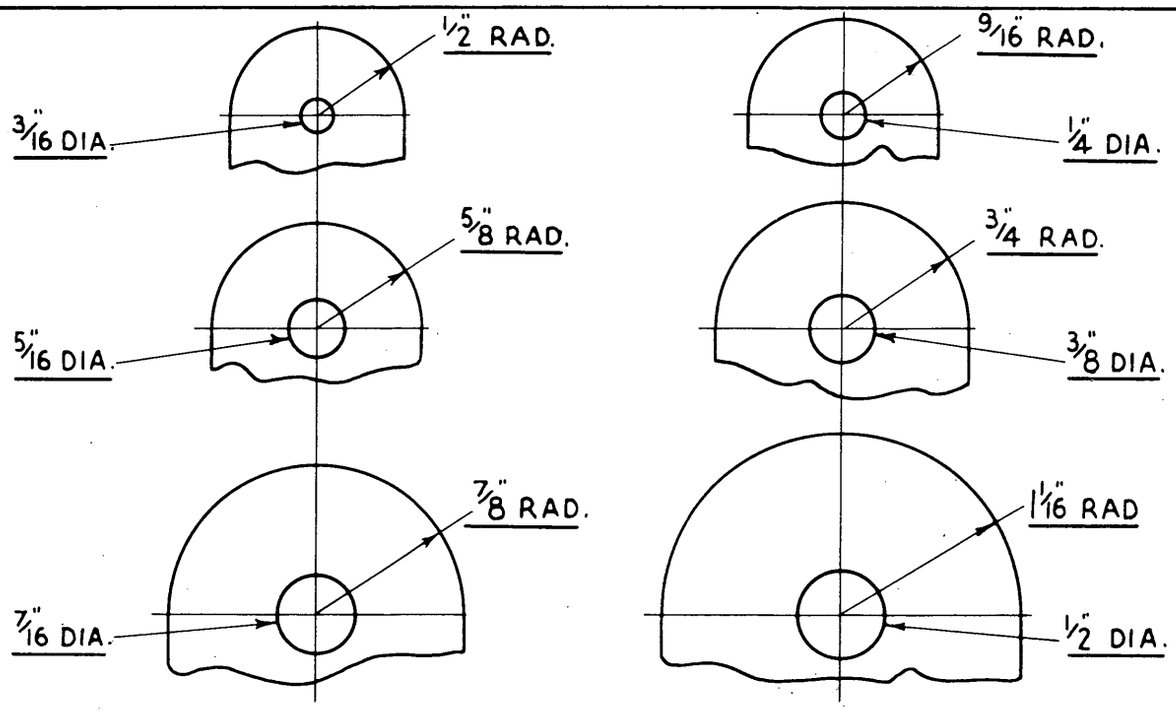


BEARING ON SPRUCE & PLY.

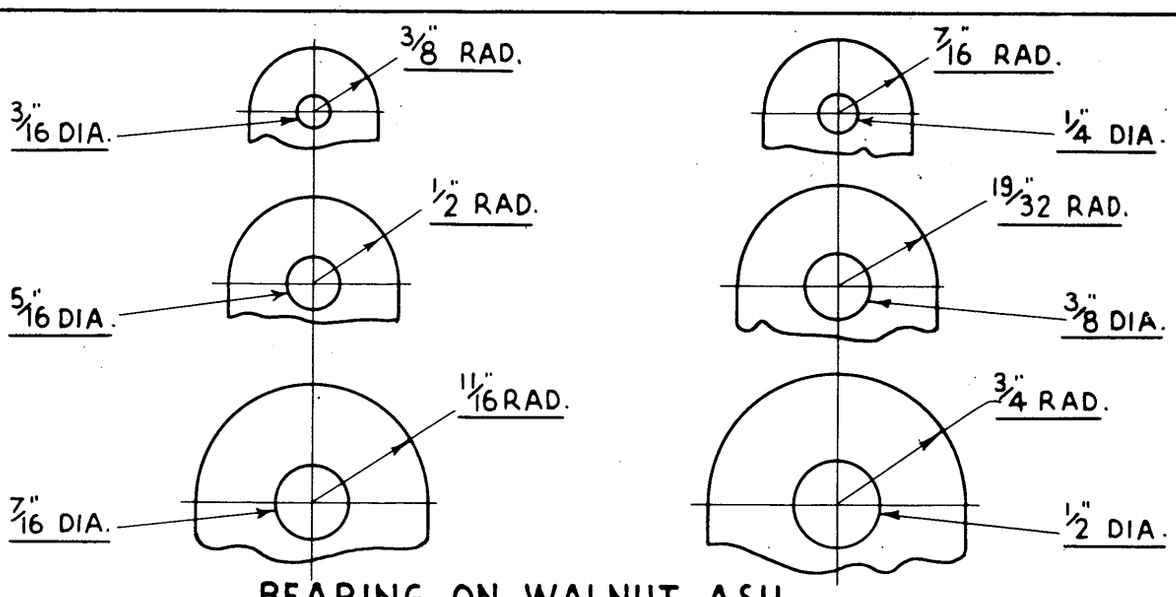


BEARING ON WALNUT, ASH & OTHER HARDWOODS.

PROFILE RADII MUST CONFORM WITH DIMENSIONS GIVEN ABOVE.

FOR SINGLE BOLTS USE THE STANDARD D.H.S. 34 ALCLAD WASHER.

| ISSUE NO. | DATE |
|---|---|
| 1 | 27-10-45 |

COMPILED BY B.P. WILSON

TRACED BY GARNET & Co 4-12-45

APPROVED BY

WASHER PLATES FOR BEARING ON WOOD

DRAWING OFFICE DATA SHEET No. 1/28

65

g Mallet

THE DE HAVILLAND AIRCRAFT COMPANY LTD, HATFIELD, HERTS

# D.H.S. 514

SHEET Nº 1 | Nº OF SHTS 3

## WIRE LOCKING TO D.H.S. 514

### DRILLING OF NUTS

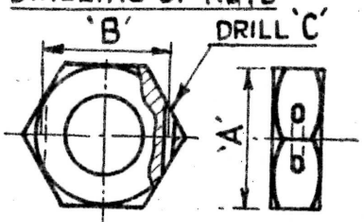


| SIZE | 1/4"BSF | 5/16"BSF | 3/8"BSF | 7/16"BSF | 1/2"BSF | 9/16"BSF | 5/8"BSF |
|---|---|---|---|---|---|---|---|
| 'A' ACROSS FLATS | ·438<br>·445 | ·518<br>·525 | ·592<br>·600 | ·702<br>·710 | ·812<br>·820 | ·912<br>·920 | 1·000<br>1·010 |
| 'B' | ·370 | ·450 | ·532 | ·63 | ·80 | ·920 | ·966 |
| DRILL 'C' | Nº58 | Nº58 | Nº58 | Nº54 | Nº54 | Nº54 | Nº54 |

LOCKING WIRE: 22 SWG. NON-CORRODIBLE STEEL WIRE, SPEC. DTD189 OR DTD161

CALLING UP: A STANDARD NUT (e.g. A 27 GP) DRILLED FOR WIRE LOCKING WILL BE A. 27 GP/DHS 514/D

### DRILLING OF BOLTS, ALSO 4BA AND 2BA CHEESE HEAD SCREWS

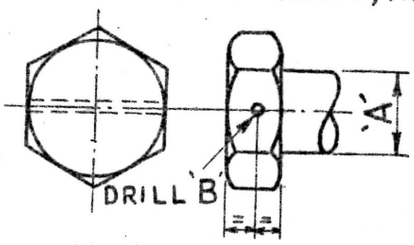


| BOLT SIZE 'A' | 4 BA | 2 BA | 1/4"BSF | 5/16"BSF | 3/8"BSF | 7/16"BSF | 1/2"BSF |
|---|---|---|---|---|---|---|---|
| DRILL 'B' | Nº58 | Nº58 | Nº58 | Nº58 | Nº54 | Nº54 | Nº54 |

4 BA & 2 BA CHEESE HEAD SCREWS - DRILL Nº 58
FOR BOLT SIZES ABOVE 1/2" BSF USE THE NUT STANDARD FOR DRILLING ACROSS CORNERS

CALLING UP: A STANDARD BOLT (e.g. A 25/4E) DRILLED FOR WIRE LOCKING WILL BE A 25/4E/DHS. 514/D

DATE OF ISSUE 3 DEC 1958
DRAWING OFFICE

EXAMPLE SHOWING TYPICAL METHOD OF WIRE LOCKING

## D.H.S. 514A - PEENING OF BOLT ENDS

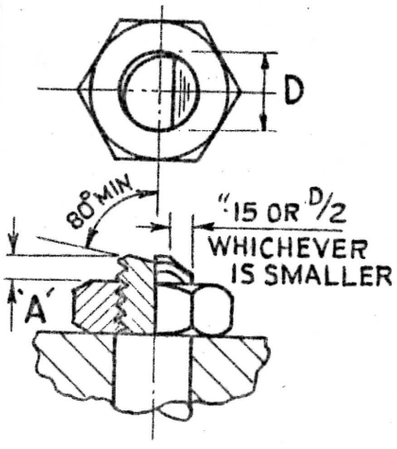


WHEN NUTS ARE REQUIRED TO BE LOCKED BY PEENING THE BOLT END, DRAWINGS WILL CALL FOR 'LOCK TO D.H.S. 514 A' AND THE FOLLOWING METHOD MUST BE USED.

THE BOLT END MUST BE CUT DOWN TO DIM. 'A' A SLIGHT COUNTERSINK IS PERMISSIBLE IF REQUIRED. THE BOLT END IS THEN PEENED OVER TO CLOSE ONE THREAD AS CLOSE AS POSSIBLE TO THE NUT. PREFERABLY THIS SHOULD BE DONE WITH THE SPECIAL NUT LOCKING TOOLS SPECIFIED IN ENG. TECH. MEMO Nº 21. WHEN SPECIAL TOOLS ARE NOT AVAILABLE LOCKING WILL BE CARRIED OUT BY USING A HAMMER AND FLAT PUNCH. A REACTION BLOCK SHOULD BE USED TO SUPPORT THE HEAD OF THE BOLT.

| BOLT SIZE | 2 BA | 1/4"BSF | 5/16"BSF | 3/8"BSF | 7/16"BSF | 1/2"BSF | 9/16"BSF | 5/8"BSF |
|---|---|---|---|---|---|---|---|---|
| DIM. 'A' | ·05 | ·06 | ·07 | ·075 | ·08 | ·09 | ·09 | ·10 |

## D.H.S. 514B - SPOT LOCKING OF NUTS

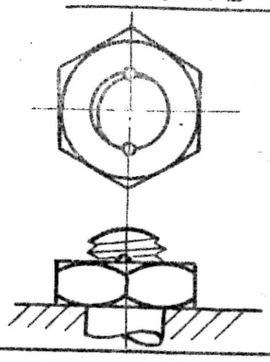

WHEN NUTS ARE REQUIRED TO BE SPOT LOCKED DRAWINGS WILL CALL FOR LOCK TO D.H.S. 514 B AND THE FOLLOWING METHOD MUST BE USED.

BOLTS WILL BE CENTRE PUNCHED IN TWO PLACES AS SHOWN TO CAUSE INTERFERENCE WITH BOTH THREADS.

THE BOLT WILL NOT BE CUT DOWN WHEN THIS METHOD OF LOCKING IS CALLED FOR.

NOTE. THIS METHOD OF LOCKING MUST ONLY BE CALLED FOR ON SEALING BOLTS WHERE A SEALING COMPOUND IS USED OVER THE THREADS.

| ISSUE Nº | DATE |
|---|---|
| 3 | S. 971 |

COMPILED
T.D. GOODING
TRACED
APPROVED
T. Young.

# LOCKING OF BOLTS, NUTS, AND SCREWS

Not shown for DO manual ?

## WIRE LOCKING - PIPE COUPLINGS

ALL PIPE COUPLINGS IRRESPECTIVE OF THEIR TYPE OR POSITION IN THE AIRCRAFT SHOULD BE POSITIVELY LOCKED.

SINGLE WIRE LOCKING AS ILLUSTRATED IS PERMISSIBLE ON PIPE COUPLINGS WHERE THE WIRE LENGTH IS SHORT AND LAYS CLOSE TO THE COMPONENT LOCKED.

DOUBLE WIRE LOCKING IS PREFERRED AND IS ESSENTIAL WHERE THE CONNECTING LENGTH OF WIRE IS UNSUPPORTED AND/OR CAN BECOME DAMAGED.

END OF WIRE TO BE TUCKED UNDER.

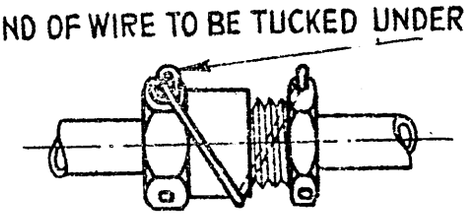

THE WIRE TO DESCRIBE A HELIX ROUND THE JOINT AT LEAST HALF A TURN IN THE DIRECTION IN WHICH THE FITTING IS TIGHTENED.

---

THE FOLLOWING ILLUSTRATIONS ARE TAKEN FROM S.I.S. 28 AND SHOWN FOR GUIDANCE.

THE METHOD OF WIRE LOCKING NEED NOT BE SHOWN ON DRAWINGS BUT CALL UP "WIRE LOCK TO D.H.S. 514"

CERTAIN TYPES OF JOINTS e.g. EXAMPLE (d) BELOW REQUIRE A RIGID ANCHOR POINT FOR THE LOCK WIRE AND PROVISION MUST BE MADE FOR THIS ON DRAWINGS.

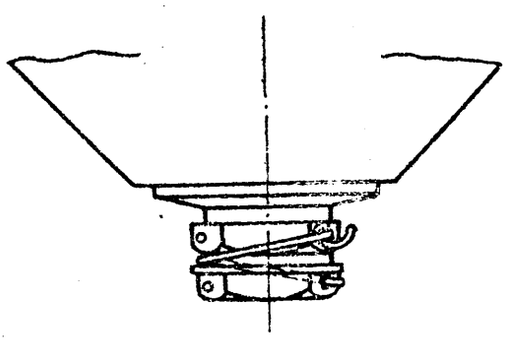

(a) DRAIN COCK OR DRAIN PLUG ADAPTED TO FEMALE FLANGE

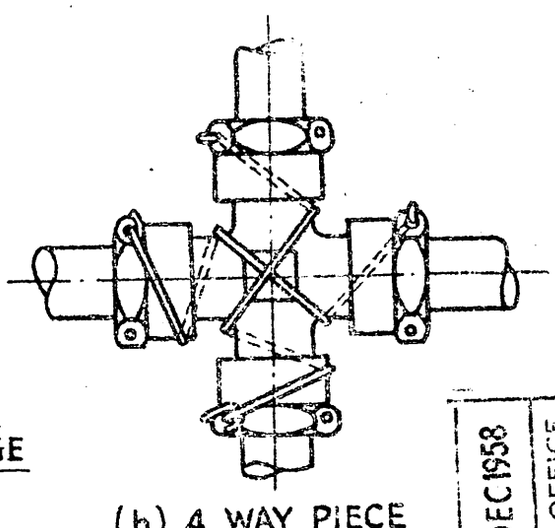

(b) 4 WAY PIECE

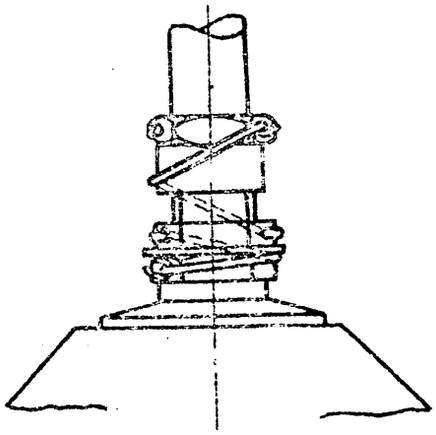

(c) PIPE TO COMPONENT CONNECTION REQUIRING TWO LOCKING WIRES

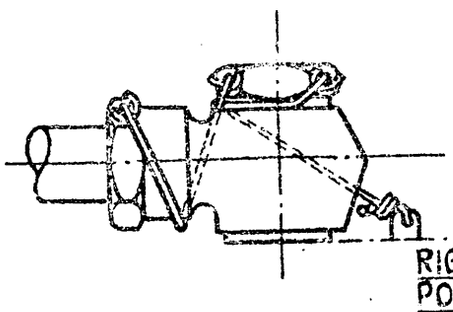


(d) BANJO FITTING (TWO LOCKING WIRES)

| ISSUE Nº | DATE |
|---|---|
| 3 | 5 971 |
| | |
| | |
| | |
| | |

COMPILED
T.D. GOODING
TRACED
D.P.
APPROVED
T. Young.
1971

DATE OF ISSUE 3 DEC 1958 DRAWING OFFICE

WIRE LOCKING - PIPE COUPLINGS | D.S. 8.30

THE DE HAVILLAND AIRCRAFT COMPANY LTD., HATFIELD, HERTS | D.H.S. 514
SHEET Nº 2 | Nº OF SHTS 3

## WIRE LOCKING - PIPE COUPLINGS

ALL PIPE COUPLINGS IRRESPECTIVE OF THEIR TYPE OR POSITION IN THE AIRCRAFT SHOULD BE POSITIVELY LOCKED.

SINGLE WIRE LOCKING AS ILLUSTRATED IS PERMISSIBLE ON PIPE COUPLINGS WHERE THE WIRE LENGTH IS SHORT AND LAYS CLOSE TO THE COMPONENT LOCKED.

DOUBLE WIRE LOCKING IS PREFERRED AND IS ESSENTIAL WHERE THE CONNECTING LENGTH OF WIRE IS UNSUPPORTED AND/OR CAN BECOME DAMAGED.

END OF WIRE TO BE TUCKED UNDER.

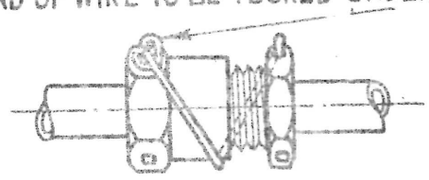

THE WIRE TO DESCRIBE A HELIX ROUND THE JOINT AT LEAST HALF A TURN IN THE DIRECTION IN WHICH THE FITTING IS TIGHTENED.

---

THE FOLLOWING ILLUSTRATIONS ARE TAKEN FROM S.I.S. 28 AND SHOWN FOR GUIDANCE.

THE METHOD OF WIRE LOCKING NEED NOT BE SHOWN ON DRAWINGS BUT CALL UP "WIRE LOCK TO D.H.S. 514"

CERTAIN TYPES OF JOINTS e.g. EXAMPLE (d) BELOW REQUIRE A RIGID ANCHOR POINT FOR THE LOCK WIRE AND PROVISION MUST BE MADE FOR THIS ON DRAWINGS.

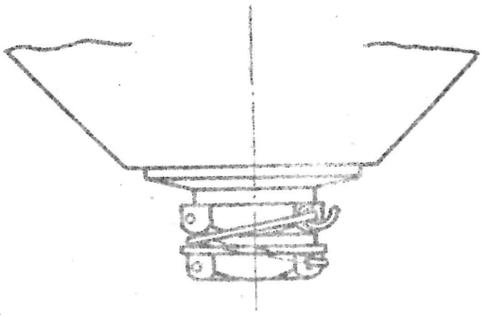

(a) DRAIN COCK OR DRAIN PLUG ADAPTED TO FEMALE FLANGE

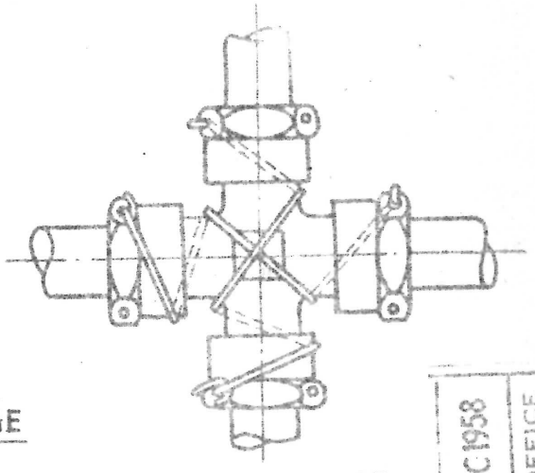

(b) 4 WAY PIECE

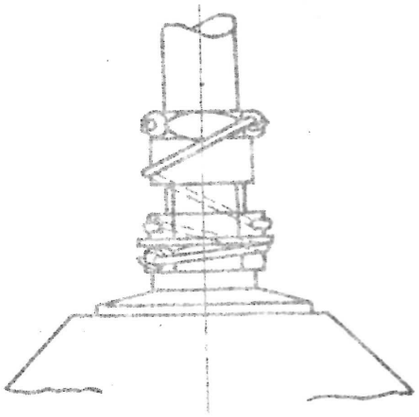

(c) PIPE TO COMPONENT CONNECTION REQUIRING TWO LOCKING WIRES

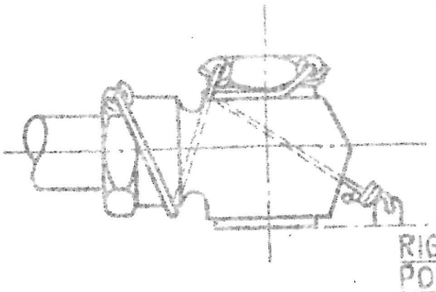

RIGID ANCHOR POINT.

(d) BANJO FITTING (TWO LOCKING WIRES)

DATE OF ISSUE 3 DEC 1958 DRAWING OFFICE

| ISSUE Nº | DATE |
|---|---|
| 3 | 5.971 |
| | |
| | |
| | |
| | |

COMPILED T.D. GOODING
TRACED D.P.
APPROVED T. Young.

WIRE LOCKING - PIPE COUPLINGS | D.S. 8.30

124 9.5

New Sheets for Demands?

THE DE HAVILLAND AIRCRAFT COMPANY LTD., HATFIELD, HERTS. | D.H.S. 514

LOCKING OF TURNBUCKLES & ADJUSTABLE END STRUTS. | SHEET Nº3 | Nº OF SHTS. 3

THE FOLLOWING METHODS OF WIRE LOCKING APPLY TO ALL FLYING AND ENGINE CONTROLS AND STRUCTURAL MEMBERS. WITH THE EXCEPTION OF ITEMS 1 & 2 DOUBLE WIRE LOCKING WILL BE USED. DRGS. CALL UP "LOCK TO DHS. 514"

1. CONTROL CABLE TURNBUCKLES (TURNBARREL AND SCREWED ENDS)

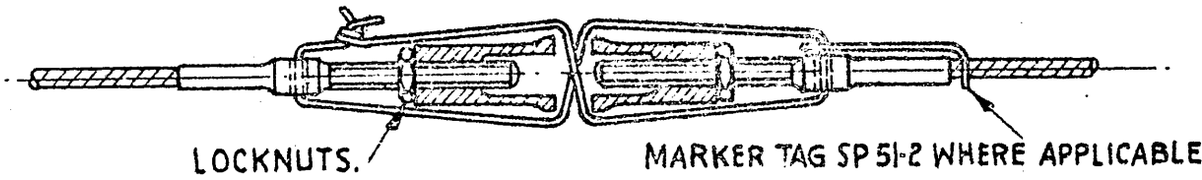


2. CONTROL CABLE TURNBUCKLES (TENSION ROD AND TAPPED ENDS)

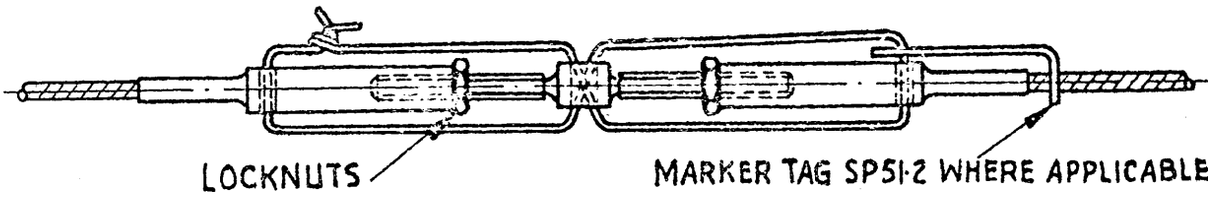


3. CONTROL CABLE TURNBUCKLES (SPECIAL TURNBARREL AND SCREWED ENDS)

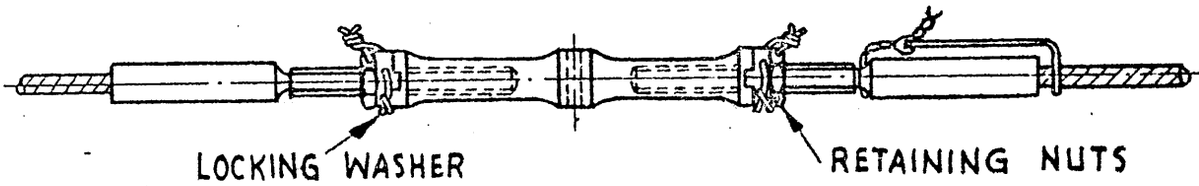


4. ADJUSTABLE STRUT (BOTH ENDS ADJUSTABLE)

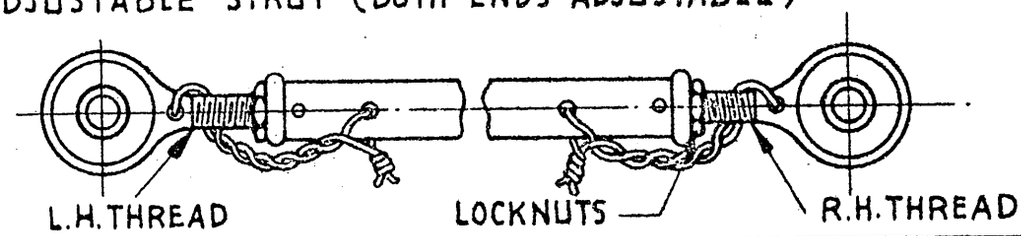


5. ADJUSTABLE STRUT (SINGLE END ADJUSTABLE)

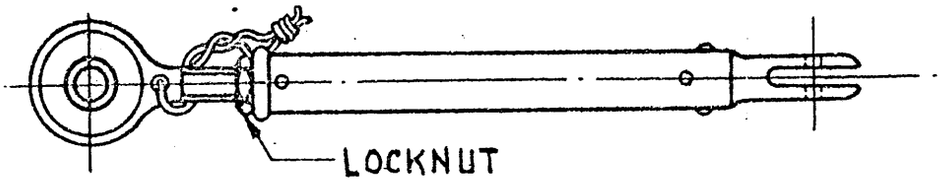


6. ADJUSTABLE STRUT INCORPORATING A QUICK RELEASE COUPLING.

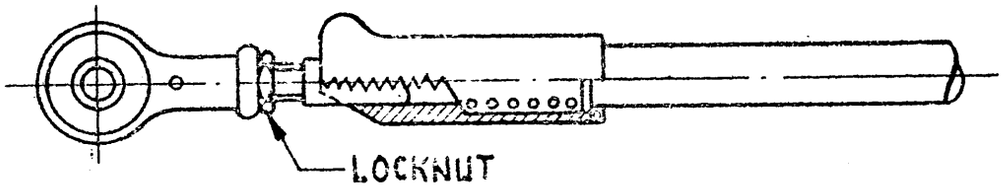


7. SPRING STRUTS OR RAMS INCORPORATING A PISTON WHICH IS FREE TO ROTATE

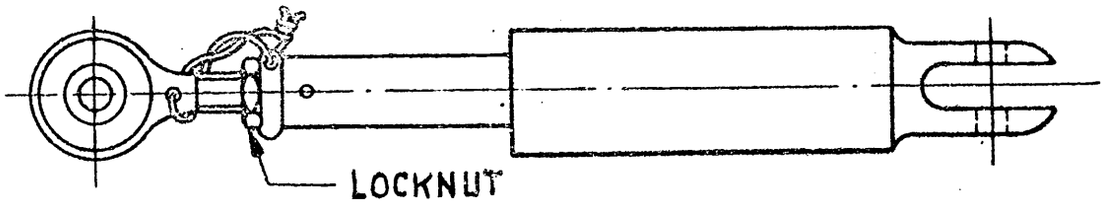


| ISSUE Nº | MOD. Nº |
|---|---|
| 2 | S.771 |
| 3 | S.971 |

COMPILED L. SPENCER

TRACED L.B.

APPROVED T. Young

LOCKING OF TURNBUCKLES & ADJUSTABLE END STRUTS | D.S. 9.16

DATE OF ISSUE 3 DEC 1958 DRAWING OFFICE

NEW SHEET FOR DOWNWARDS

| THE DE HAVILLAND AIRCRAFT COMPANY LTD., HATFIELD, HERTS. | D.H.S. 514 | |
|---|---|---|
| LOCKING OF TURNBUCKLES & ADJUSTABLE END STRUTS. | SHEET Nº 3 | Nº OF SHTS. 3 |

THE FOLLOWING METHODS OF WIRE LOCKING APPLY TO ALL FLYING AND ENGINE CONTROLS AND STRUCTURAL MEMBERS. WITH THE EXCEPTION OF ITEMS 1 & 2 DOUBLE WIRE LOCKING WILL BE USED. DRGS. CALL UP "LOCK TO DHS. 514"

1. CONTROL CABLE TURNBUCKLES (TURNBARREL AND SCREWED ENDS)

2. CONTROL CABLE TURNBUCKLES (TENSION ROD AND TAPPED ENDS)

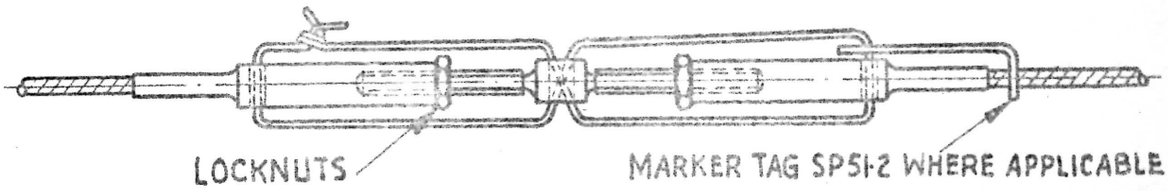


3. CONTROL CABLE TURNBUCKLES (SPECIAL TURNBARREL AND SCREWED ENDS)

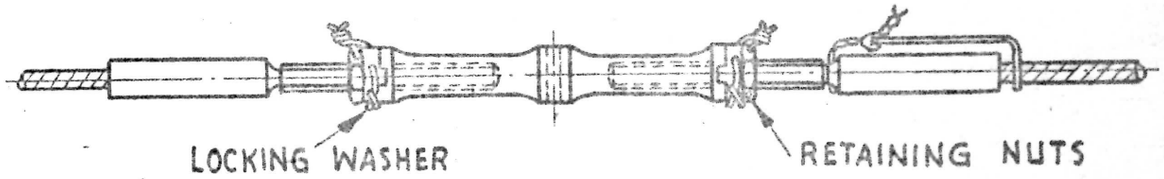


4. ADJUSTABLE STRUT (BOTH ENDS ADJUSTABLE)

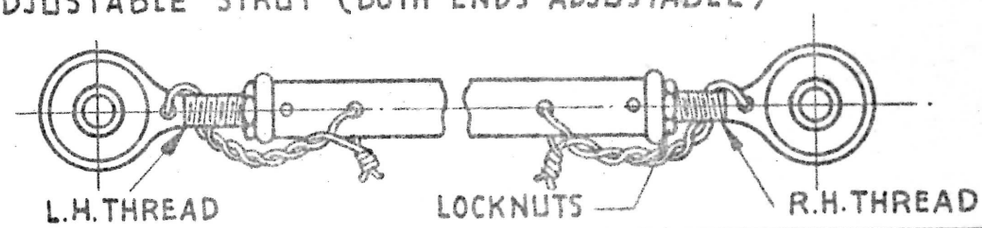


5. ADJUSTABLE STRUT (SINGLE END ADJUSTABLE)

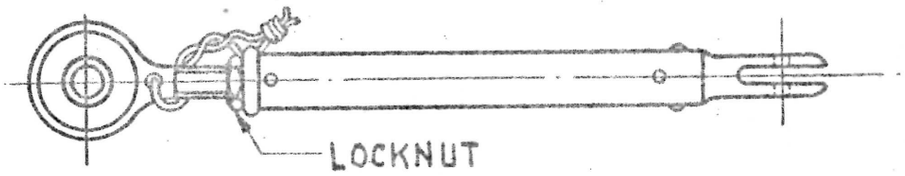


6. ADJUSTABLE STRUT INCORPORATING A QUICK RELEASE COUPLING.

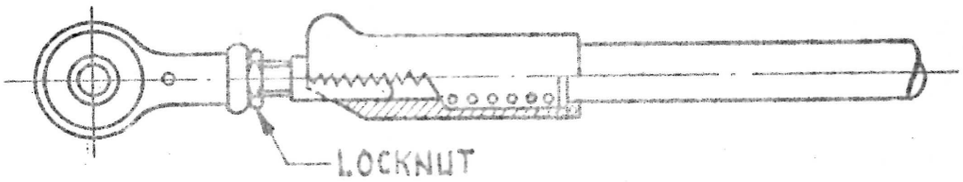


7. SPRING STRUTS OR RAMS INCORPORATING A PISTON WHICH IS FREE TO ROTATE

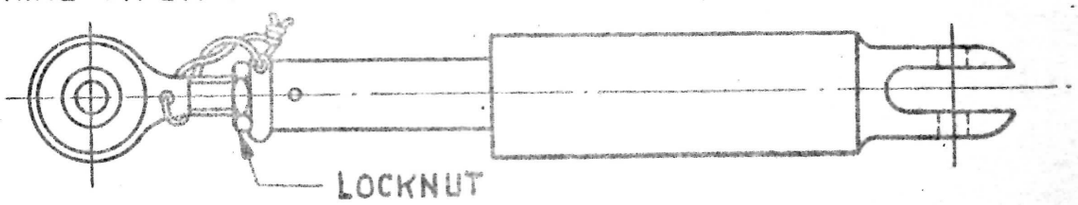


| LOCKING OF TURNBUCKLES & ADJUSTABLE END STRUTS | D.S. 9.16 |
|---|---|

| ISSUE Nº | MOD. Nº |
|---|---|
| 2 | S.771 |
| 3 | S.971 |
| | |
| | |

COMPILED
L. SPENCER
TRACED
L.B.
APPROVED
T. Young.

DATE OF ISSUE 3 DEC 1958
DRAWING OFFICE

NEW SHEET FOR DO WARNINGS

THE DE HAVILLAND AIRCRAFT COMPANY LTD., HATFIELD, HERTS. | D. H. S. 514

SHEET Nº 2 | Nº OF SHTS. 4

## WIRE LOCKING - PIPE COUPLINGS & NUTS.

ALL PIPE COUPLINGS IRRESPECTIVE OF THEIR TYPE OR POSITION IN THE AIRCRAFT SHOULD BE POSITIVELY LOCKED, EXCEPT ON L.P. OXYGEN AND A.S.I. SYSTEMS WHERE A.G.S. 838. TYPE UNION IS USED.

SINGLE WIRE LOCKING AS ILLUSTRATED IS PERMISSIBLE ON PIPE COUPLINGS WHERE THE WIRE LENGTH IS SHORT AND LAYS CLOSE TO THE COMPONENT LOCKED

DOUBLE WIRE LOCKING IS PREFERRED AND IS ESSENTIAL WHERE THE CONNECTING LENGTH OF THE WIRE IS UNSUPPORTED AND/OR CAN BECOME DAMAGED.

DOUBLE WIRE LOCKING MUST BE USED ON ALL CONTROL COMPONENTS AS SHOWN ON SHEET 3 WITH THE EXCEPTION OF EXAMPLE Nº 1.

END OF WIRE TO BE TUCKED UNDER.

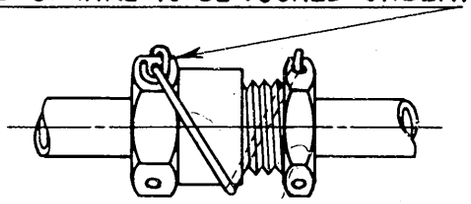

THE WIRE TO DESCRIBE A HELIX ROUND THE JOINT AT LEAST HALF A TURN IN THE DIRECTION IN WHICH THE FITTING IS TIGHTENED.

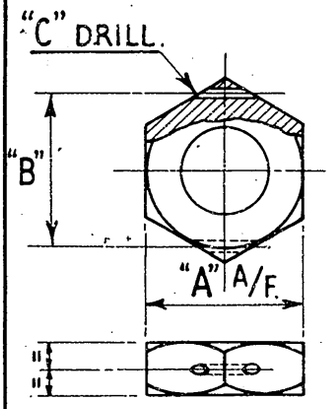


| DIM. 'B' IS TO D.H. TOOL STANDARD ST.77 & NOT A.G.S. DIMS. | | | | | | | | | | | | | | |
|---|---|---|---|---|---|---|---|---|---|---|---|---|---|---|
| DIM. 'A' ACROSS FLATS | ·440<br>·445 | ·520<br>·525 | ·595<br>·600 | ·705<br>·710 | ·815<br>·820 | ·915<br>·920 | 1·002<br>1·010 | 1·092<br>1·10 | 1·192<br>1·20 | 1·292<br>1·30 | 1·382<br>1·390 | 1·468<br>1·480 | 1·658<br>1·67 | 1·845<br>1·860 |
| 'B' LOCK WIRE HOLE CRS | ·370 | ·450 | ·532 | ·63 | ·80 | ·920 | ·966 | 1·10 | 1·20 | 1·30 | 1·37 | 1·476 | 1·65 | 1·86 |
| 'C' LOCKG WIRE DRILL HOLE | Nº58 DRILL | Nº58 DRILL | Nº58 DRILL | Nº54 DRILL | Nº54 DRILL | Nº54 DRILL | Nº54 DRILL | Nº54 DRILL | Nº54 DRILL | Nº54 DRILL | Nº48 DRILL | Nº48 DRILL | Nº48 DRILL | Nº48 DRILL |
| S.W.G. OF LOCKG WIRE | 22 SWG. NON-CORRODIBLE STEEL WIRE SPEC. D.T.D. 189 OR D.T.D. 161 (REF. ONLY) | | | | | | | | | | | | | |

NOTE:- A STANDARD NUT (e.g. A.27. G.P.) DRILLED FOR WIRE LOCKING WILL BE CALLED UP AS A.27. G.P./ D.H.S. 514. D.

## WIRE LOCKING - BOLTS, ALSO CHEESE HEAD SCREWS 4BA & 2BA. (DRILL Nº58)

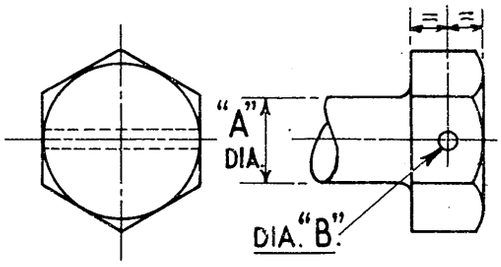


| DIA. 'A' SHANK DIA. | 2 B.A. | 1/4" B.S.F. | 5/16" B.S.F. | 3/8" B.S.F. | 7/16" B.S.F. | 1/2" B.S.F. |
|---|---|---|---|---|---|---|
| DIA. 'B' DRILL SIZE | Nº 58 | Nº 58 | Nº 58 | Nº 54 | Nº 54 | Nº 54 |
| S.W.G. OF LOCKG WIRE | 22 S.W.G. NON-CORRODIBLE STEEL WIRE. D.T.D. 189 OR D.T.D. 161 (REF. ONLY) | | | | | |

FOR BOLT SIZES ABOVE 1/2" B.S.F. USE THE NUT STANDARD FOR DRILLING ACROSS CORNERS.

NOTE:- A STANDARD BOLT (e.g. A. 25. 4.E) DRILLED FOR WIRE LOCKING WILL BE CALLED UP AS A. 25. 4.E/ D.H.S. 514. D.

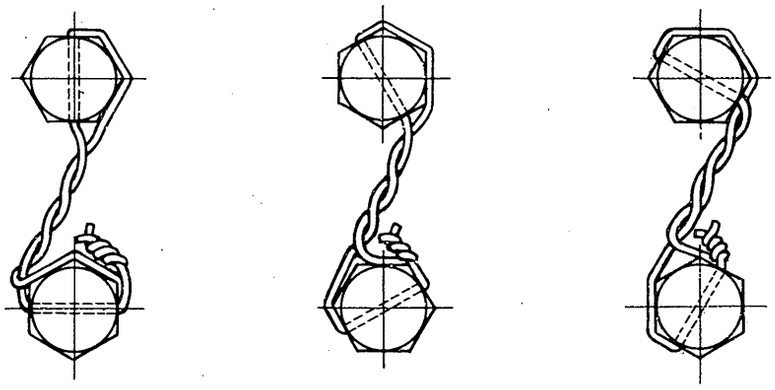

EXAMPLE SHOWING CORRECT METHOD OF WIRE LOCKING

| ISSUE Nº | DATE |
|---|---|
| 1 | SEPT. '49 |
| 2 | S.747 |
| | |
| | |

COMPILED: L. SPENCER

TRACED: DOLTON DWG Co. 26 · 8 · 1949

APPROVED: [signature]

WIRE LOCKING - NUTS, BOLTS & PIPE UNIONS.

DRAWING OFFICE DATA SHEET Nº 1/29.A

THE DE HAVILLAND AIRCRAFT COMPANY LTD., HATFIELD, HERTS.

D.H.S. 514

SHEET Nº 3 | Nº OF SHTS 4

# LOCKING OF TURNBUCKLES & ADJUSTABLE END STRUTS.

THE FOLLOWING METHODS OF WIRE LOCKING APPLY TO ALL FLYING AND ENGINE CONTROLS AND STRUCTURAL MEMBERS WITHOUT EXCEPTION

## 1. CONTROL CABLE TURNBUCKLES (TURNBARREL AND SCREWED ENDS)

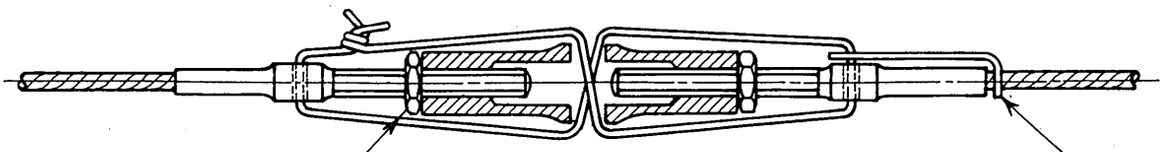

LOCKNUTS. MARKER TAG SP 51-2 WHERE APPLICABLE

## 2. CONTROL CABLE TURNBUCKLES (TENSION ROD AND TAPPED ENDS)

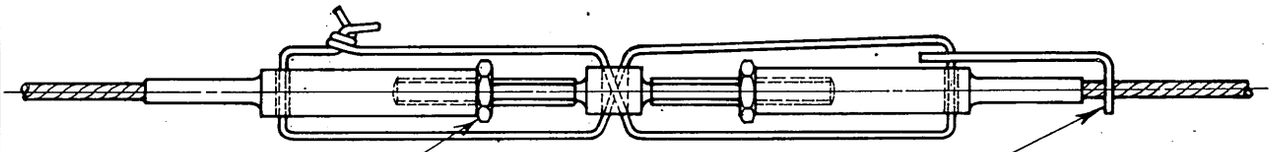

LOCKNUTS MARKER TAG SP 51-2 WHERE APPLICABLE

## 3. CONTROL CABLE TURNBUCKLES (SPECIAL TURNBARREL AND SCREWED ENDS)

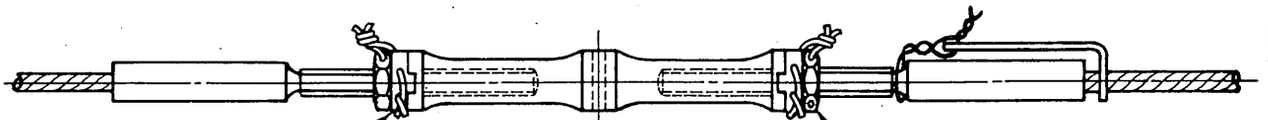

LOCKING WASHER RETAINING NUTS

## 4. ADJUSTABLE STRUT (BOTH ENDS ADJUSTABLE)

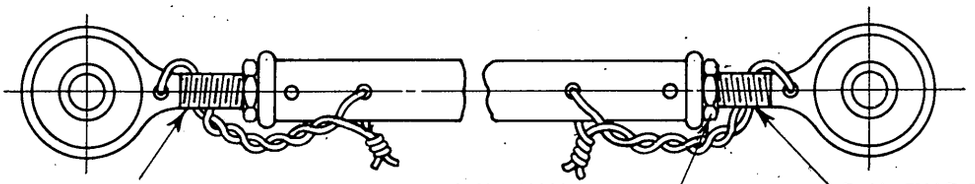

L.H. THREAD LOCKNUTS R.H. THREAD

## 5. ADJUSTABLE STRUT (SINGLE END ADJUSTABLE)

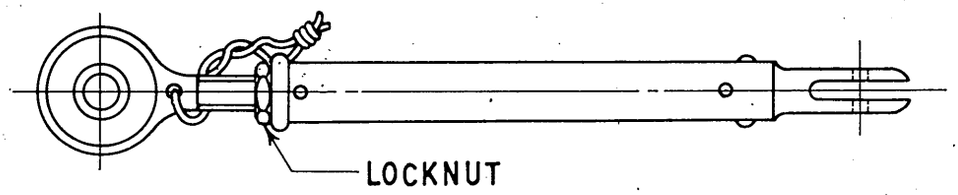

LOCKNUT

## 6. ADJUSTABLE STRUT INCORPORATING A QUICK RELEASE COUPLING

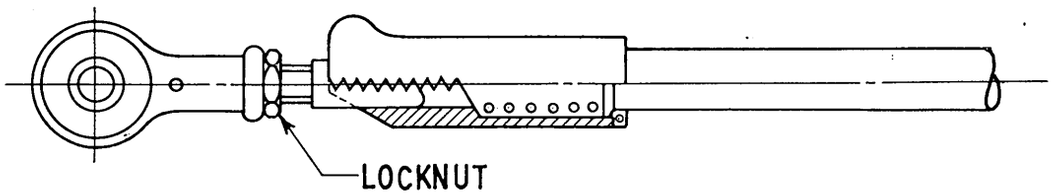

LOCKNUT

## 7. SPRING STRUTS OR RAMS INCORPORATING A PISTON WHICH IS FREE TO ROTATE

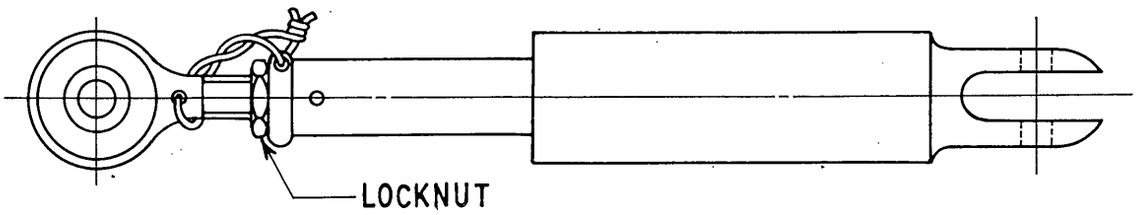

LOCKNUT

| ISSUE Nº | MOD. Nº |
|---|---|
| 2 | S.771. |
| | |
| | |
| | |

COMPILED
L. SPENCER

TRACED
DOLTON DRWG Co.
23. 7. 53

APPROVED

LOCKING OF TURNBUCKLES & ADJUSTABLE END STRUTS.

DRAWING OFFICE DATA SHEET Nº 1/29B

THE FOLLOWING ILLUSTRATIONS ARE TAKEN FROM S.I.S. 28 AND SHOWN FOR GUIDANCE. (a, b, c & d ONLY.)

THE METHOD OF WIRE LOCKING NEED NOT BE SHOWN ON DRAWINGS BUT CALL UP "WIRE LOCK TO D.H.S. 514."

CERTAIN TYPES OF JOINTS e.g. EXAMPLE (d) BELOW REQUIRE A RIGID ANCHOR POINT FOR THE LOCK WIRE AND PROVISION WILL BE MADE FOR THIS ON DRAWINGS.

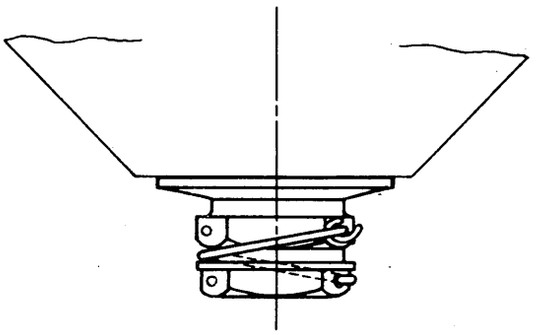

(a) DRAIN COCK OR DRAIN PLUG ADAPTED TO FEMALE FLANGE

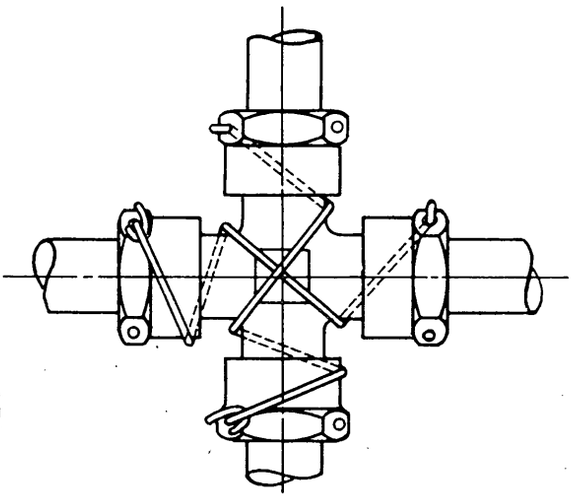

(b) 4 WAY PIECE

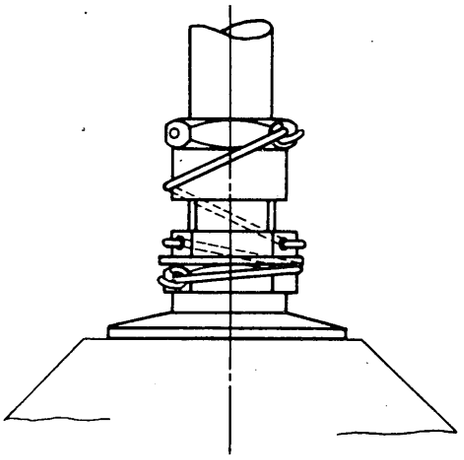

(c) PIPE TO COMPONENT CONNECTION REQUIRING TWO LOCKING WIRES

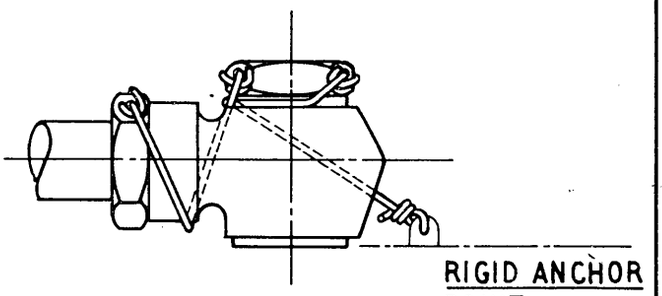


(d) BANJO FITTING. (TWO LOCKING WIRES)

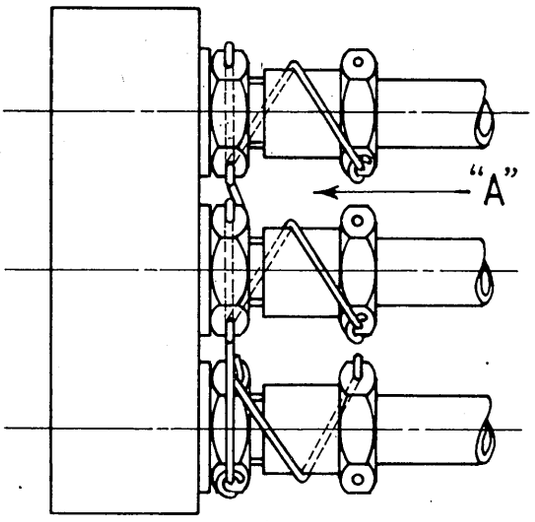


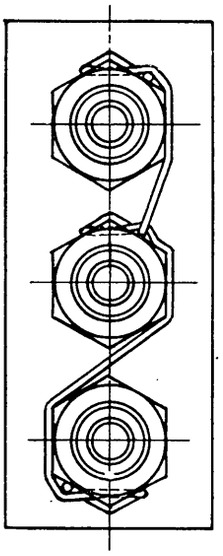

VIEW IN DIRECTION OF ARROW "A."
UNION NUTS OMITTED FOR CLARITY

(e) PIPE TO ADAPTOR - ADAPTOR TO JUNCTION BLOCK (OR A COMPONENT)

| ISSUE Nº | DATE |
|---|---|
| 1 | JAN '50 |
| 2 | S.600 |
| | |
| | |

DRAWN
L. SPENCER
TRACED
DOLTON DWG. CO. 31 · 1 · 1950
APPROVED

THE DE HAVILLAND AIRCRAFT COMPANY LTD., HATFIELD, HERTS.

WIRE LOCKING - PIPE CONNECTIONS

DRAWING OFFICE 1/29C
DATA SHEET Nº

THE DE HAVILLAND AIRCRAFT COMPANY LTD., HATFIELD, HERTS.

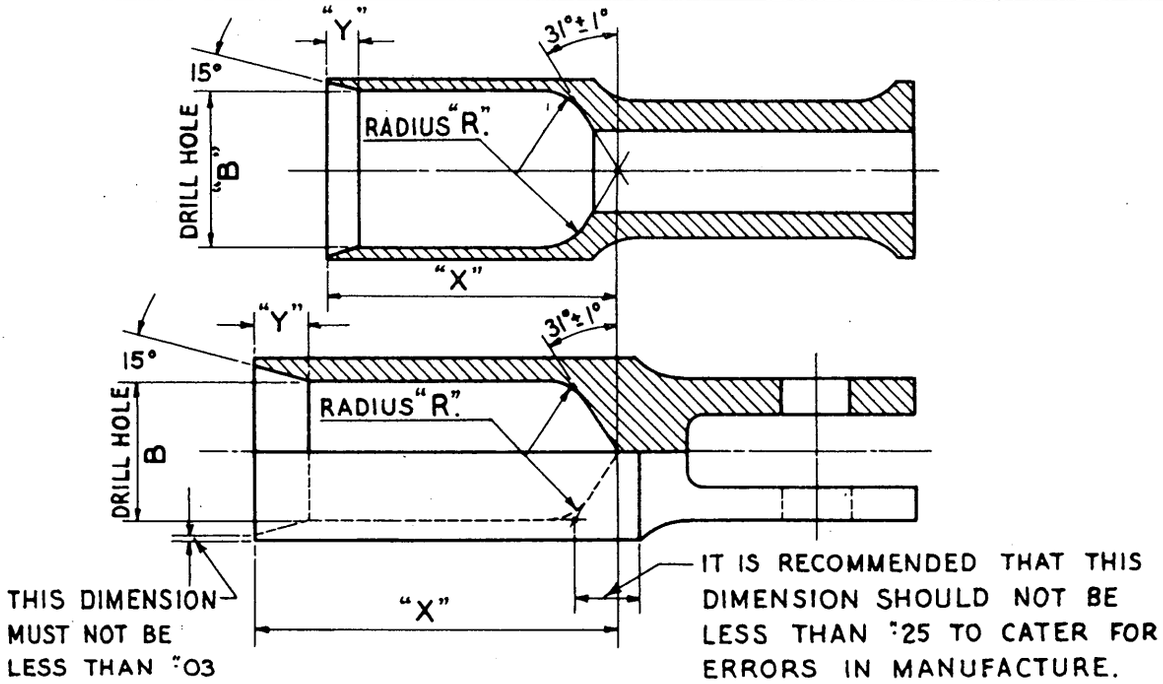


| DRILL HOLE "B" | RADIUS "R" | DRILL HOLE "B" | RADIUS "R" |
|---|---|---|---|
| 1/4" DIA. | ·05 | 11/16" DIA. | ·15 |
| 5/16" DIA. | ·05 | 3/4" DIA. | ·15 |
| 3/8" DIA. | ·08 | 13/16" DIA. | ·15 |
| 7/16" DIA. | ·08 | 7/8" DIA. | ·15 |
| 1/2" DIA. | ·10 | 15/16" TO 1 7/16" DIA. | ·20 |
| 9/16" DIA. | ·10 | 1 1/2" TO 2 3/8" DIA. | ·25 |
| 5/8" DIA. | ·10 | 2 1/2" DIA. UPWARDS | ·38 |

67

**NOTE**:- DEPTH OF HOLE TO BE CONTROLLED BY DIMENSION "X".
DEPTH OF CHAMFER TO BE CONTROLLED BY DIMENSION "Y."

(1) WHERE PINS THROUGH PLUG ENDS ARE NEAR THE END OF THE TUBE IT IS IMPORTANT THAT THE EFFECT SHOWN IN EXAMPLE "A" IS AVOIDED. THIS RESULTS IN ELONGATED HOLES AND BROKEN DRILLS. IF THE PINS CANNOT BE REPOSITIONED, A FLAT BOTTOMED HOLE SHOULD BE USED AS SHOWN IN EXAMPLE "B".

(2) TO SAVE MACHINING, AND TO MAKE PARTING-OFF OF TUBES TO COARSER LIMITS POSSIBLE, PLUG ENDS SHOULD BE DESIGNED WITHOUT A FLANGE, AS SHOWN BELOW. IN A FEW CASES, SUCH AS UNDERCARRIAGE STRUTS, WHERE TUBES ARE HIGHLY LOADED IN COMPRESSION, IT MAY BE ADVISABLE TO RETAIN THE FLANGE; IN THIS CASE A NOTE SHOULD BE ADDED TO THE ASSEMBLY DRAWING OF THE STRUT, CALLING FOR THE TUBE TO BE A GOOD BUTT JOINT AGAINST THE FLANGE OF PLUG END.

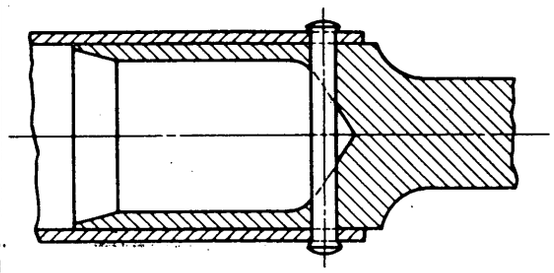

EXAMPLE "A".

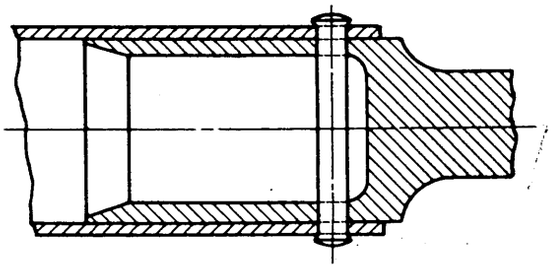

EXAMPLE "B".

| ISSUE Nº | DATE |
|---|---|
| 1 | |
| | |
| | |
| | |
| | |
| | |

COMPILED
B. P. WILSON
TRACED
GARNET & Co
11. 10. 46
APPROVED
A B Babe

STANDARD RADIUSED DRILL HOLES FOR PLUG ENDS

DRAWING OFFICE DATA SHEET Nº 1/30

THE DE HAVILLAND AIRCRAFT COMPANY LTD., HATFIELD, HERTS.

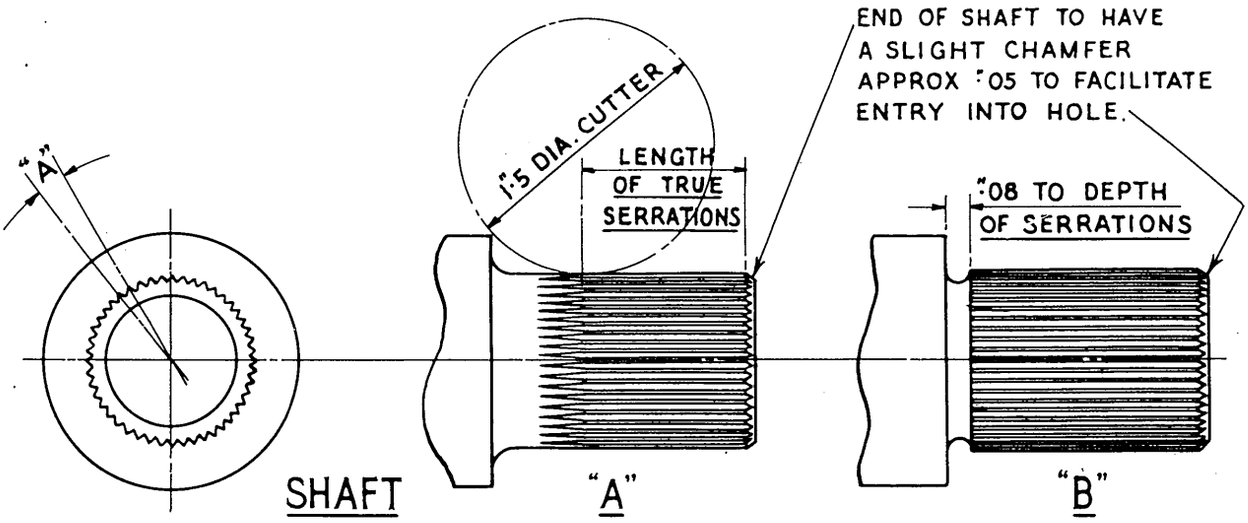


NOTE :- SERRATIONS ON A SHAFT ARE PRODUCED EITHER BY ROTARY CUTTER METHOD 'A' OR GEAR SHAPER METHOD 'B'. METHOD 'A' SHOULD BE USED WHEREVER POSSIBLE AS THIS COMPANY HOLDS THE NECESSARY EQUIPMENT. ALLOWANCE MUST BE MADE FOR THE CUTTER AND THE FULL LENGTH OF SERRATIONS CALLED FOR. IF METHOD 'B' MUST BE USED THE UNDERCUT SHOWN MUST BE CALLED UP ON DRAWING.

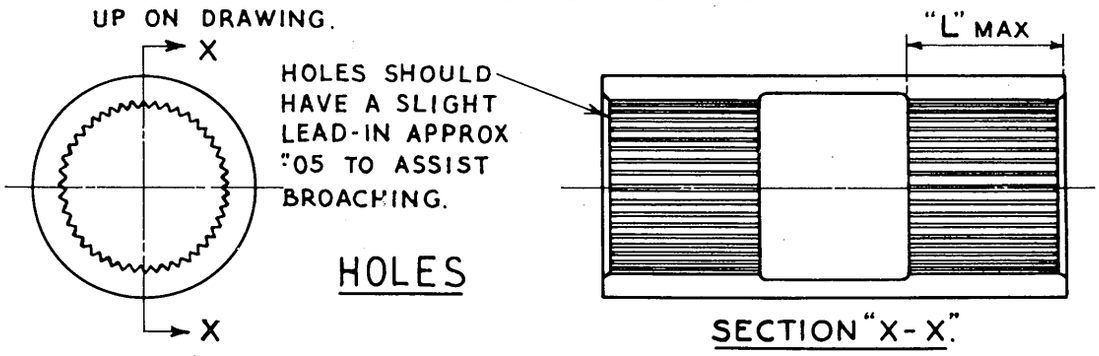


| NOMINAL DIAMETER | No OF SERRATIONS | ANGLE 'A' BETWEEN SERRATIONS | MAX. LENGTH 'L' | PILOT HOLE DIAMETER |
|---|---|---|---|---|
| 3/8" | 36 | 10° | ·75 | ·351 – ·352 |
| 1/2" | 36 | 10° | ·75 | ·468 – ·469 |
| 5/8" | 36 | 10° | ·75 | ·583 – ·584 |
| 3/4" | 48 | 7½° | 1·25 | ·714 – ·716 |
| 1" | 48 | 7½° | 1·25 | ·952 – ·954 |
| 1¼" | 48 | 7½° | 1·25 | 1·188 – 1·190 |
| 1½" | 48 | 7½° | 1·25 | 1·428 – 1·426 |
| | | | | |

STOCKS OF TOOLS AND GAUGES ARE MAINTAINED FOR THE ABOVE RANGE OF FINE SERRATIONS. DESIGN SHOULD BE CONFINED TO THIS RANGE.

METHOD OF CALLING UP ON DRAWINGS :-

SHAFTS :- 48 FINE SERRATIONS × 1¼" NOMINAL DIA. FULL LENGTH OF SERRATION = ·50 PROFILE AND LIMITS TO B.S.S. A.19.

HOLES :- 1·188 – 1·190 DIA. PILOT HOLE FOR 48 FINE SERRATIONS × 1¼" NOMINAL DIA. PROFILE AND LIMITS TO B.S.S. A.19.

FOR STRAIGHT SERRATIONS SEE DATA SHEET No 1/31 B.

| ISSUE No | DATE |
|---|---|
| 1 | |
| 2 | |
| | |
| | |
| | |
| | |

COMPILED
B. P. WILSON
TRACED
GARNET & Co 14. 10. 46
APPROVED
A B Baker

SERRATED SHAFTS AND HOLES

DRAWING OFFICE DATA SHEET No 1/31A

68

# THE DE HAVILLAND AIRCRAFT COMPANY LTD., HATFIELD, HERTS.

TO REDUCE TOOL COSTS, DESIGNS EMBODYING FLAT SERRATIONS SHOULD CONFORM AS FAR AS PRACTICABLE TO THE RANGE ILLUSTRATED BELOW. WHERE POSSIBLE, THE MAXIMUM WIDTH OF THE SERRATION SHOULD BE LIMITED TO THE WIDTH OF THE CUTTER.

| CUTTER REF. Nº | PITCH | EFFECTIVE DEPTH | TOOTH FORM (AS PRODUCED BY THE CUTTER) | O/D. OF CUTTER | WIDTH OF CUTTER |
|---|---|---|---|---|---|
| STD 164/1 | ·040" | ·0236" | 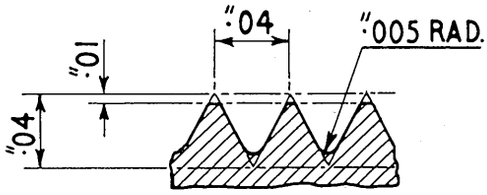  | 3" | 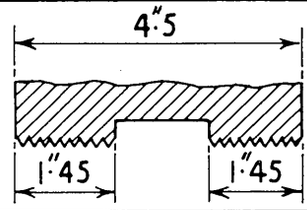  |
| STD 164/2 | ·040" | ·0236" | 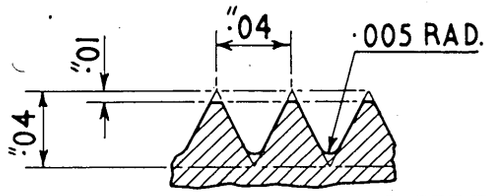  | 2½" | 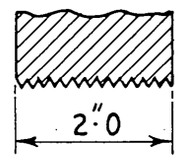  |
| STD 164/3 | ·0625" | 3/64" (·0468") | 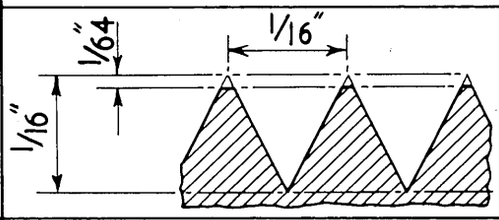  | 3" | 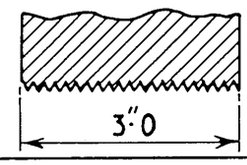  |
| STD 164/4 | ·0625" | ·0368" | 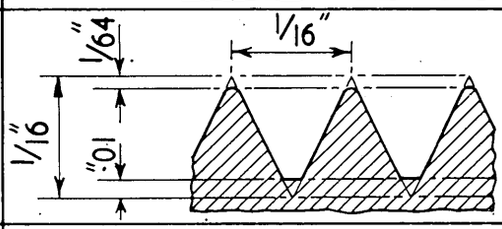  | 3 15/16" | 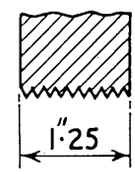  |
| STD 164/5 | ·144" | ·0785" | 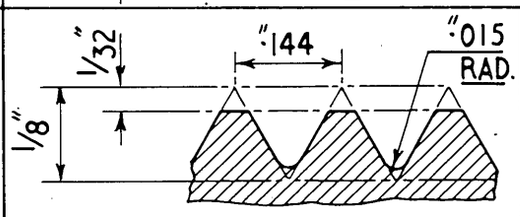  | 4" | 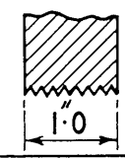  |
| STD 164/6 | ·045" | ·029" | 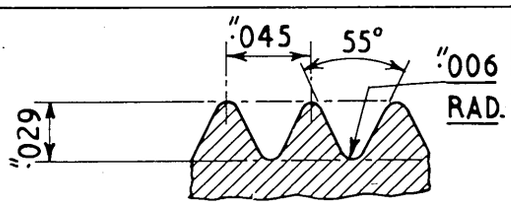  | 3" | 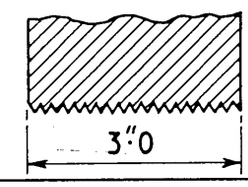  |
| STD 164/7 | ·040" | ·0236" | 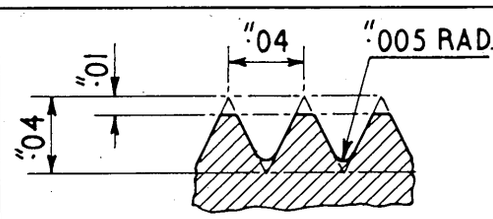  | 3" | 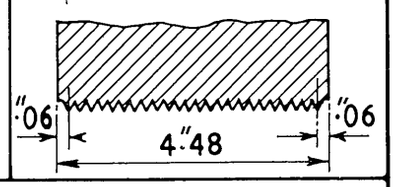  |

NOTE:- SERRATIONS PRODUCED BY CUTTERS Nº 1, 2 & 7 ARE INTERCHANGEABLE.
SERRATIONS PRODUCED BY CUTTERS Nº 3 & 4 ARE INTERCHANGEABLE.

## METHOD OF CALLING UP ON DRAWINGS

DRAWINGS SHOULD QUOTE TOTAL WIDTH OF SERRATION REQUIRED AND GIVE THE CUTTER Nº WITH AN ENLARGED SCRAP VIEW OF THE SERRATIONS. THE SERRATIONS SHOULD ALSO BE LOCATED TO A DEFINITE DATUM. *ie.* THE CENTRE LINE OF A HOLE OR A DATUM FACE AS SHOWN BELOW.

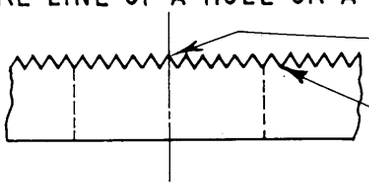

CREST OF TOOTH ON ℄ OF HOLE

SERRATIONS TO CUTTER STD 164/

| ISSUE Nº | DATE |
|---|---|
| 2 | JAN. '53 |

COMPILED: L. SPENCER

TRACED: DOLTON DRG Co. 8 · 9 · 1952

APPROVED

# SERRATIONS FOR FLAT SURFACES

DRAWING OFFICE DATA SHEET Nº 1/31B

69

THE DE HAVILLAND AIRCRAFT COMPANY LTD., HATFIELD, HERTS.

# D. H. S. 183

SHEET Nº 1: | Nº OF SHEETS 1.

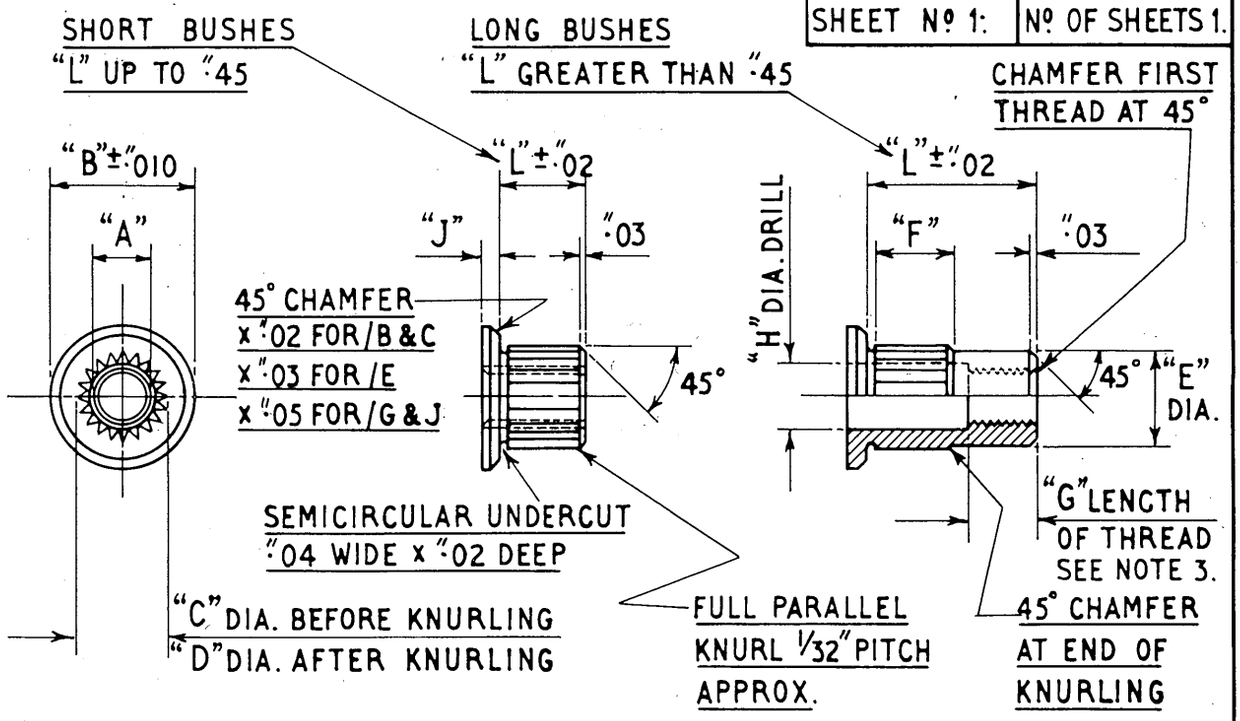


| BASIC PART NUMBER | THREAD "A" | DIA. "B" | DIA "C" | DIA. "D" | DIA. "E" | "F" MIN | "F" MAX. | LENGTH "L" MIN. | MINIMUM LENGTH OF THRE? "G" | COUNTER BORE DIA. "H" | DEPTH OF HEAD "J" |
|---|---|---|---|---|---|---|---|---|---|---|---|
| D.H.S. 183/B | 4 B.A. | ·35 | ·249<br>·251 | ·257<br>·260 | ·247<br>·244 | ·20 | ·40 | ·25 | ·20 | Nº 26 DRILL | ·08 |
| D.H.S. 183/C | 2 B.A. | ·50 | ·312<br>·314 | ·319<br>·322 | ·309<br>·306 | ·20 | ·40 | ·25 | ·25 | Nº 11 DRILL | ·10 |
| D.H.S. 183/E | 1/4" B.S.F. | ·625 | ·374<br>·376 | ·382<br>·385 | ·372<br>·369 | ·20 | ·40 | ·25 | ·30 | "F" DRILL | ·10 |
| D.H.S. 183/G | 5/16" B.S.F. | ·75 | ·499<br>·501 | ·507<br>·510 | ·497<br>·494 | ·20 | ·40 | ·25 | ·35 | "P" DRILL | ·10 |
| D.H.S. 183/J | 3/8" B.S.F. | ·75 | ·562<br>·564 | ·569<br>·572 | ·559<br>·556 | ·20 | ·40 | ·30 | ·40 | "W" DRILL | ·10 |

NOTES.

1. THESE BUSHES ARE FOR USE IN LIGHT ALLOY COMPONENTS.
2. HOLE IN COMPONENT TO RECEIVE BUSH WILL BE DRILLED OR REAMED TO DIM. "C."
3. IN THE SHORTER BUSHES WHERE THE LENGTH OF THREAD "G" LEAVES SMALL AMOUNTS UP TO ·10 MAXIMUM TO BE COUNTERBORED TO DIAMETER "H", THE COUNTER-BORING MAY BE OMITTED IF DESIRED, TO FACILITATE PRODUCTION.
4. FOR BUSHES WITH LENGTH "L" GREATER THAN ·45 THE PORTION IN EXCESS OF THE KNURLING IS TO BE REDUCED TO DIAMETER "E" AS SHOWN ABOVE.

METHOD OF CALLING UP.

LENGTH "L" IS INDICATED BY A NUMBER REPRESENTING THE LENGTH IN HUNDREDTHS OF AN INCH INCREASING IN ·05 INCREMENTS.

EXAMPLE:- A SHOULDERED KNURLED BUSH 1/4" B.S.F. THREAD WITH "L" LENGTH ·65 WILL BE :- D.H.S. 183/E/65

| ISSUE Nº | MOD. Nº |
|---|---|
| 7 | S.657 |

COMPILED: L. SPENCER

TRACED: DOLTON DRAWING CO. 16. 4. 52

APPROVED

FINISH. CADMIUM PLATE | MATERIAL. MILD STEEL BAR | SPECIFICATION. S.1.

## SHOULDERED KNURLED BUSHES

DRAWING OFFICE DATA SHEET Nº 1/31C

# THE DE HAVILLAND AIRCRAFT COMPANY LTD., HATFIELD, HERTS.

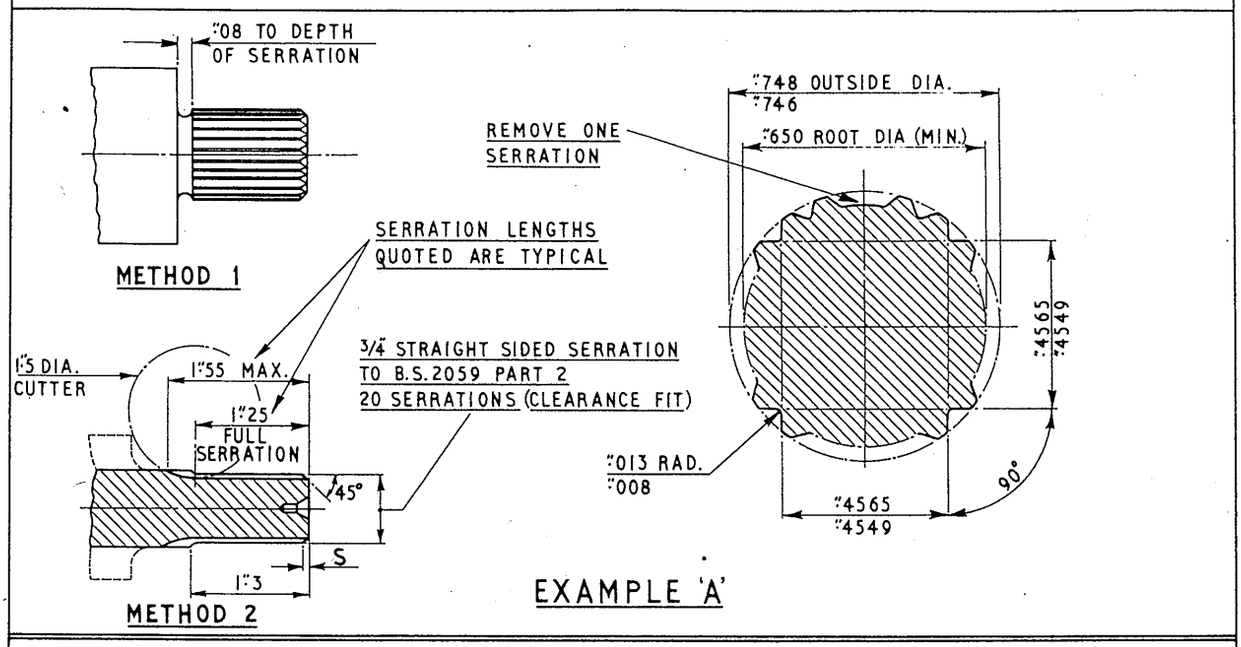


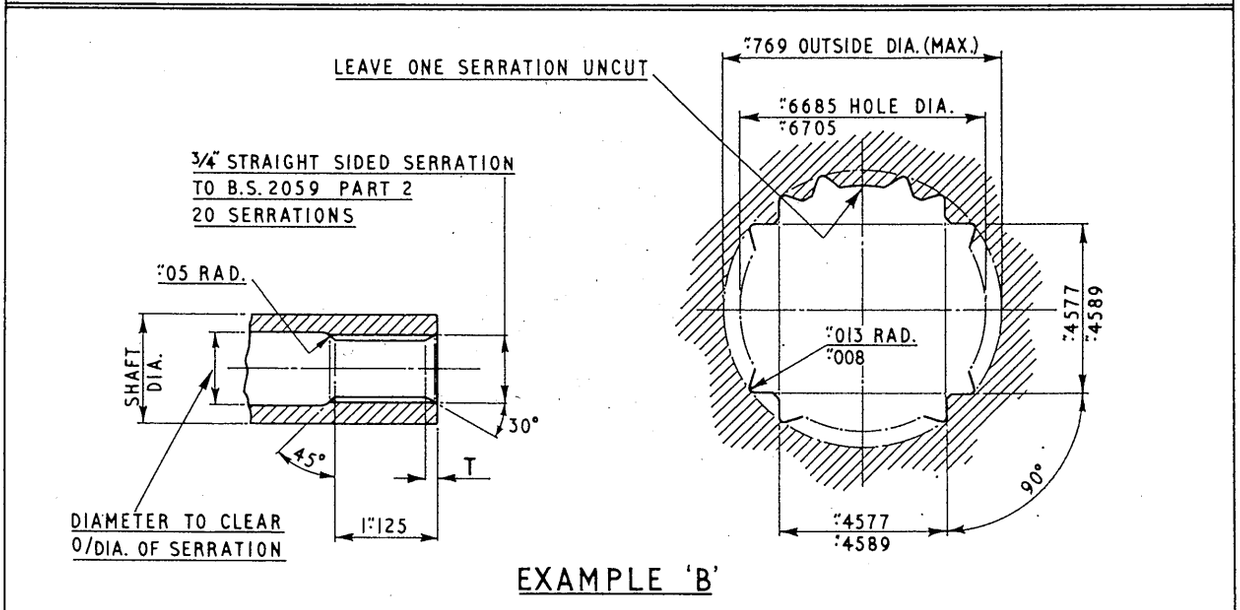


## NOTES

1. THE PREFERRED STANDARD COARSE SERRATION TO B.S.2059 PART 2 WILL BE CALLED UP ON ALL FUTURE DRAWINGS, IN LIEU OF THE EXISTING SPEC. B.S. A 19 WHICH IS NOW OBSOLESCENT.
2. FIT OF SERRATION
   THE NEW B.S.2059 PART 2 SPEC. MAKES PROVISION FOR THREE GRADES OF FIT i.e. "INTERFERENCE" "TRANSITION" AND "CLEARANCE". IN EACH INSTANCE THE "HOLE" SIZE REMAINS CONSTANT, THE NECESSARY ADJUSTMENT REQUIRED IS ACHIEVED BY VARIATION OF THE SHAFT SIZE (SEE DIMENSION 'Q' ON DATA SHEET Nº 1/31E). FOR GENERAL APPLICATIONS A "CLEARANCE FIT" SHOULD BE CALLED UP.
3. UNCUT SERRATIONS
   IN SOME CASES IT IS ESSENTIAL THAT THE SERRATED SHAFT IS RADIALLY DISPOSED IN A CONTROLLED POSITION IN THE SERRATED HOLE. THIS IS ACCOMPLISHED BY LEAVING ONE BLANK SERRATION. TO ENABLE THIS FEATURE TO BE PRODUCED IN THE MOST ECONOMICAL & PRACTICABLE MANNER, IT IS DESIRABLE THAT THE SHAFT SHALL HAVE ONE SERRATION REMOVED AND THAT THE HOLE SHALL HAVE ONE SERRATION UNCUT. DRAUGHTSMAN SHOULD NOTE THAT WHEN DETAILING UNCUT SERRATIONS, THE DRAWING MUST BE FULLY DIMENSIONED, AS SHOWN ABOVE.
4. CHAMFERS
   THE END ENTRANCE OF SERRATED HOLES SHALL NORMALLY BE CHAMFERED AT 60°. SERRATION ENDS TERMINATING INSIDE A BORE AND THE ENDS OF SERRATED SHAFTS SHALL NORMALLY BE CHAMFERED AT 45° (DRAWING ABOVE REFERS). THE RECOMMENDED DIMENSIONS FOR THE LENGTH OF CHAMFER ARE GIVEN ON DATA SHEET Nº 1/31E.
5. METHOD OF MANUFACTURE
   SERRATIONS ON A SHAFT ARE PRODUCED EITHER BY GEAR SHAPER (METHOD 1) OR ROTARY CUTTER (METHOD 2) (SEE EXAMPLES ABOVE). METHOD 2 SHOULD BE USED WHEREVER POSSIBLE. ALLOWANCE MUST BE MADE FOR THE CUTTER AND THE FULL LENGTH OF SERRATION CALLED FOR. IF METHOD 1 MUST BE USED, THE UNDERCUT SHOWN MUST BE CALLED UP ON DRAWING.
6. METHOD OF CALLING UP
   DRAWINGS WILL CALL UP SERRATIONS TO B.S. 2059 PART 2, E.G., A 1·0 SERRATION WILL BE CALLED UP AS:-
   "1·0 STRAIGHT SIDED SERRATION TO B.S. 2059 PART 2 - 24 SERRATIONS (CLEARANCE FIT)". (SEE ALSO NOTE ON UNCUT SERRATIONS)

| ISSUE Nº | DATE |
|---|---|
| 1 | |
| | |
| | |
| | |

| COMPILED |
|---|
| T. EVANS |
| TRACED |
| DOLTON DRWG. Co. 11·7·55 |
| APPROVED |

# SERRATED SHAFTS AND HOLES

DRAWING OFFICE DATA SHEET Nº 1/31D

# THE DE HAVILLAND AIRCRAFT COMPANY LTD., HATFIELD, HERTS.

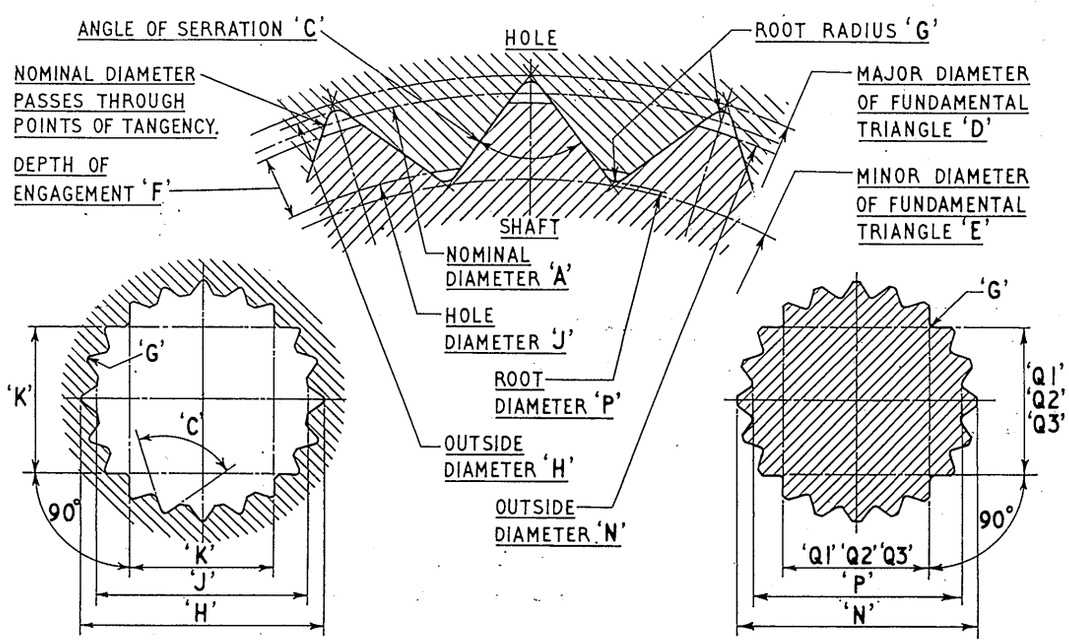


HOLE

SHAFT

| NOML. DIA. | Nº OF SERRATIONS | ANGLE OF SERRATIONS | THEORETICAL DIAMETERS MAX. | THEORETICAL DIAMETERS MIN. | DEPTH OF ENGAGEMENT MIN. | DEPTH OF ENGAGEMENT F MIN. × B | ROOT RAD. | HOLE OUTSIDE DIA. MAX. | HOLE HOLE DIA. | HOLE DIMN ACROSS FLATS | SHAFT OUTSIDE DIA. | SHAFT ROOT DIA. MIN. | SHAFT DIMENSION ACROSS FLATS INTERFERENCE | SHAFT DIMENSION ACROSS FLATS TRANSITION | SHAFT DIMENSION ACROSS FLATS CLEARANCE | RESULTANT FITS IN ·001 UNITS INTERFERENCE | RESULTANT FITS IN ·001 UNITS TRANSITION | RESULTANT FITS IN ·001 UNITS CLEARANCE | RECOMMENDED CHAMFER | | NOML. DIA. |
|---|---|---|---|---|---|---|---|---|---|---|---|---|---|---|---|---|---|---|---|---|---|
| A | B | C | D | E | F | × B | G | H | J | K | N | P | Q1 | Q2 | Q3 | K-Q1 | K-Q2 | K-Q3 | S | T | A |
| IN. | | DEG. | IN. | IN. | IN. | IN. | IN. | IN. | IN. | IN. | IN. | IN. | IN. | IN. | IN. | | | | | | IN. |
| 1/4 | 12 | 60 | ·278 | ·1966 | ·0172 | ·2064 | ·009<br>·006 | ·268 | ·2114<br>·2126 | ·1390<br>·1399 | ·248<br>·247 | ·199 | ·1405<br>·1399 | ·1393<br>·1384 | ·1381<br>·1369 | -1·5<br>0 | -0·3<br>+1·5 | +0·9<br>+3·0 | ·04 | ·09 | 1/4 |
| 5/16 | 12 | 60 | ·3476 | ·2458 | ·0214 | ·2568 | ·012<br>·007 | ·335 | ·2649<br>·2661 | ·1738<br>·1747 | ·310<br>·309 | ·249 | ·1753<br>·1747 | ·1741<br>·1732 | ·1729<br>·1717 | -1·5<br>0 | -0·3<br>+1·5 | +0·9<br>+3·0 | ·04 | ·09 | 5/16 |
| 3/8 | 16 | 67½ | ·3974 | ·3123 | ·0216 | ·3456 | ·009<br>·006 | ·389 | ·3271<br>·3287 | ·2208<br>·2217 | ·373<br>·372 | ·314 | ·2223<br>·2217 | ·2211<br>·2202 | ·2199<br>·2187 | -1·5<br>0 | -0·3<br>+1·5 | +0·9<br>+3·0 | ·04 | ·07 | 3/8 |
| 7/16 | 16 | 67½ | ·4637 | ·3643 | ·0252 | ·4032 | ·011<br>·006 | ·456 | ·3820<br>·3836 | ·2576<br>·2585 | ·435<br>·434 | ·366 | ·2591<br>·2585 | ·2579<br>·2570 | ·2567<br>·2555 | -1·5<br>0 | -0·3<br>+1·5 | +0·9<br>+3·0 | ·05 | ·09 | 7/16 |
| 1/2 | 16 | 67½ | ·5299 | ·4163 | ·0300 | ·4800 | ·012<br>·007 | ·520 | ·4354<br>·4370 | ·2944<br>·2953 | ·496<br>·497 | ·419 | ·2959<br>·2953 | ·2947<br>·2938 | ·2935<br>·2923 | -1·5<br>0 | -0·3<br>+1·5 | +0·9<br>+3·0 | ·05 | ·10 | 1/2 |
| 5/8 | 20 | 72 | ·6489 | ·5394 | ·0313 | ·6260 | ·011<br>·006 | ·642 | ·5578<br>·5594 | ·3814<br>·3826 | ·623<br>·622 | ·540 | ·3834<br>·3826 | ·3818<br>·3806 | ·3802<br>·3786 | -2·0<br>0 | -0·4<br>+2·0 | +1·2<br>+4·0 | ·05 | ·10 | 5/8 |
| 3/4 | 20 | 72 | ·7787 | ·6473 | ·0378 | ·7560 | ·013<br>·008 | ·769 | ·6685<br>·6705 | ·4577<br>·4589 | ·749<br>·746 | ·650 | ·4597<br>·4589 | ·4581<br>·4569 | ·4565<br>·4549 | -2·0<br>0 | -0·4<br>+2·0 | +1·2<br>+4·0 | ·06 | ·10 | 3/4 |
| 7/8 | 20 | 72 | ·9085 | ·7552 | ·0449 | ·8980 | ·015<br>·010 | ·896 | ·7792<br>·7812 | ·5340<br>·5352 | ·875<br>·871 | ·760 | ·5360<br>·5352 | ·5344<br>·5332 | ·5328<br>·5312 | -2·0<br>0 | -0·4<br>+2·0 | +1·2<br>+4·0 | ·07 | ·12 | 7/8 |
| 1 | 24 | 75 | 1·0277 | ·8847 | ·0437 | 1·0488 | ·013<br>·008 | 1·020 | ·9066<br>·9086 | ·6256<br>·6271 | ·999<br>·996 | ·886 | ·6281<br>·6271 | ·6261<br>·6246 | ·6241<br>·6221 | -2·5<br>0 | -0·5<br>+2·5 | +1·5<br>+5·0 | ·07 | ·12 | 1 |
| 1 1/8 | 24 | 75 | 1·1561 | ·9953 | ·0492 | 1·1808 | ·015<br>·010 | 1·146 | 1·0201<br>1·0225 | ·7038<br>·7053 | 1·123<br>1·121 | ·999 | ·7063<br>·7053 | ·7043<br>·7028 | ·7023<br>·7003 | -2·5<br>0 | -0·5<br>+2·5 | +1·5<br>+5·0 | ·08 | ·12 | 1 1/8 |
| 1 1/4 | 24 | 75 | 1·2846 | 1·1059 | ·0550 | 1·3200 | ·017<br>·012 | 1·272 | 1·1335<br>1·1359 | ·7820<br>·7835 | 1·24<br>1·246 | 1·111 | ·7845<br>·7835 | ·7825<br>·7810 | ·7805<br>·7785 | -2·5<br>0 | -0·5<br>+2·5 | +1·5<br>+5·0 | ·08 | ·15 | 1 1/4 |
| 1 3/8 | 24 | 75 | 1·4130 | 1·2165 | ·0616 | 1·4784 | ·018<br>·013 | 1·399 | 1·2455<br>1·2479 | ·8602<br>·8617 | 1·37<br>1·371 | 1·222 | ·8627<br>·8617 | ·8607<br>·8592 | ·8587<br>·8567 | -2·5<br>0 | -0·5<br>+2·5 | +1·5<br>+5·0 | ·09 | ·15 | 1 3/8 |
| 1 1/2 | 24 | 75 | 1·5415 | 1·3271 | ·0674 | 1·6176 | ·020<br>·015 | 1·525 | 1·3589<br>1·3613 | ·9384<br>·9399 | 1·498<br>1·496 | 1·335 | ·9409<br>·9399 | ·9389<br>·9374 | ·9369<br>·9349 | -2·5<br>0 | -0·5<br>+2·5 | +1·5<br>+5·0 | ·09 | ·17 | 1 1/2 |
| 1 5/8 | 36 | 80 | 1·6503 | 1·5002 | ·0470 | 1·6920 | ·014<br>·009 | 1·643 | 1·5242<br>1·5270 | 1·0608<br>1·0626 | 1·623<br>1·621 | 1·502 | 1·0638<br>1·0626 | 1·0614<br>1·0596 | 1·0590<br>1·0566 | -3·0<br>0 | -0·6<br>+3·0 | +1·8<br>+6·0 | ·08 | ·12 | 1 5/8 |
| 1 3/4 | 36 | 80 | 1·7773 | 1·6156 | ·0511 | 1·8396 | ·015<br>·010 | 1·769 | 1·6410<br>1·6438 | 1·1424<br>1·1442 | 1·748<br>1·746 | 1·618 | 1·1454<br>1·1442 | 1·1430<br>1·1412 | 1·1406<br>1·1382 | -3·0<br>0 | -0·6<br>+3·0 | +1·8<br>+6·0 | ·08 | ·12 | 1 3/4 |
| 1 7/8 | 36 | 80 | 1·9044 | 1·7311 | ·0551 | 1·9836 | ·016<br>·011 | 1·895 | 1·7580<br>1·7608 | 1·2241<br>1·2259 | 1·873<br>1·871 | 1·734 | 1·2271<br>1·2259 | 1·2247<br>1·2229 | 1·2223<br>1·2199 | -3·0<br>0 | -0·6<br>+3·0 | +1·8<br>+6·0 | ·08 | ·13 | 1 7/8 |
| 2 | 36 | 80 | 2·0313 | 1·8465 | ·0592 | 2·1312 | ·017<br>·012 | 2·021 | 1·8748<br>1·8776 | 1·3057<br>1·3075 | 1·998<br>1·996 | 1·851 | 1·3087<br>1·3075 | 1·3063<br>1·3045 | 1·3039<br>1·3015 | -3·0<br>0 | -0·6<br>+3·0 | +1·8<br>+6·0 | ·08 | ·14 | 2 |
| 2 1/4 | 36 | 80 | 2·2852 | 2·0773 | ·0672 | 2·4192 | ·019<br>·014 | 2·272 | 2·1084<br>2·1116 | 1·4689<br>1·4707 | 2·248<br>2·246 | 2·083 | 1·4719<br>1·4707 | 1·4695<br>1·4677 | 1·4671<br>1·4647 | -3·0<br>0 | -0·6<br>+3·0 | +1·8<br>+6·0 | ·09 | ·17 | 2 1/4 |
| 2 1/2 | 36 | 80 | 2·5391 | 2·3081 | ·0750 | 2·7000 | ·021<br>·016 | 2·525 | 2·3428<br>2·3460 | 1·6321<br>1·6342 | 2·498<br>2·496 | 2·314 | 1·6356<br>1·6342 | 1·6328<br>1·6307 | 1·6300<br>1·6272 | -3·5<br>0 | -0·7<br>+3·5 | +2·1<br>+7·0 | ·10 | ·17 | 2 1/2 |
| 2 3/4 | 40 | 81 | 2·7885 | 2·5611 | ·0735 | 2·940 | ·022<br>·017 | 2·773 | 2·5972<br>2·6004 | 1·8110<br>1·8131 | 2·748<br>2·746 | 2·568 | 1·8145<br>1·8131 | 1·8117<br>1·8096 | 1·8089<br>1·8061 | -3·5<br>0 | -0·7<br>+3·5 | +2·1<br>+7·0 | ·10 | ·17 | 2 3/4 |
| 3 | 40 | 81 | 3·0420 | 2·7939 | ·0798 | 3·1920 | ·024<br>·019 | 3·025 | 2·8328<br>2·8364 | 1·9756<br>1·9777 | 2·998<br>2·996 | 2·803 | 1·9791<br>1·9777 | 1·9763<br>1·9742 | 1·9735<br>1·9707 | -3·5<br>0 | -0·7<br>+3·5 | +2·1<br>+7·0 | ·10 | ·18 | 3 |

NOTE:- FOR NOMINAL DIAMETERS UP TO 6"0 REFER TO SPEC. B.S. 2059 PART 2.

| ISSUE Nº | DATE |
|---|---|
| 1 | |

DRAWN
T. EVANS.
TRACED
DOLTON DRWG Co.
11 - 7 - 1955
APPROVED

DRAWING OFFICE DATA SHEET Nº 1/31E

# SERRATED SHAFTS AND HOLES

THE DE HAVILLAND AIRCRAFT COMPANY LTD., HATFIELD, HERTS.

# D.H.S. 500

SHEET Nº 1 | Nº OF SHTS 2

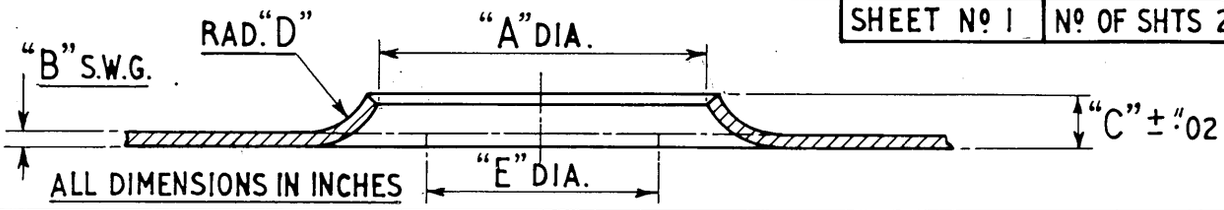


ALL DIMENSIONS IN INCHES

| DIA "A" | GAUGE "B" | OVERALL HEIGHT "C" | RAD. "D" | DEVL HOLE "E" | DIA. "A" | GAUGE "B" | OVERALL HEIGHT "C" | RAD. "D" | DEVL HOLE "E" | DIA. "A" | GAUGE "B" | OVERALL HEIGHT "C" | RAD. "D" | DEVL HOLE "E" |
|---|---|---|---|---|---|---|---|---|---|---|---|---|---|---|
| 1 | 24 | ·23 | ·25 | 13/16 | 2·5 | 16 | ·30 | ·25 | 2·274 | 4·25 | 24 | ·35 | ·30 | 3·860 |
| 1 | 22 | ·22 | ·25 | 27/32 | 2·5 | 14 | ·30 | ·25 | 2·308 | 4·25 | 22 | ·35 | ·30 | 3·876 |
| 1 | 20 | ·22 | ·25 | 27/32 | 2·5 | 12 | ·35 | ·25 | 2·30 | 4·25 | 20 | ·35 | ·30 | 3·896 |
| 1 | 18 | ·23 | ·25 | 7/8 | | | | | | 4·25 | 18 | ·35 | ·30 | 3·924 |
| 1 | 16 | ·25 | ·25 | 7/8 | 2·75 | 24 | ·30 | ·25 | 2·418 | 4·25 | 16 | ·40 | ·30 | 3·862 |
| 1 | 14 | ·27 | ·25 | 7/8 | 2·75 | 22 | ·30 | ·25 | 2·432 | 4·25 | 14 | ·40 | ·30 | 3·902 |
| 1 | 12 | ·28 | ·25 | 29/32 | 2·75 | 20 | ·30 | ·25 | 2·452 | 4·25 | 12 | ·45 | ·30 | 3·862 |
| | | | | | 2·75 | 18 | ·30 | ·25 | 2·484 | | | | | |
| 1·25 | 24 | ·24 | ·25 | 1 1/32 | 2·75 | 16 | ·30 | ·25 | 2·524 | 4·5 | 24 | ·35 | ·30 | 4·11 |
| 1·25 | 22 | ·25 | ·25 | 1 1/32 | 2·75 | 14 | ·30 | ·25 | 2·558 | 4·5 | 22 | ·35 | ·30 | 4·126 |
| 1·25 | 20 | ·25 | ·25 | 1·052 | 2·75 | 12 | ·35 | ·25 | 2·55 | 4·5 | 20 | ·35 | ·30 | 4·146 |
| 1·25 | 18 | ·25 | ·25 | 1·08 | | | | | | 4·5 | 18 | ·35 | ·30 | 4·174 |
| 1·25 | 16 | ·30 | ·25 | 1·02 | 3·0 | 24 | ·30 | ·25 | 2·668 | 4·5 | 16 | ·40 | ·30 | 4·112 |
| 1·25 | 14 | ·30 | ·25 | 1·053 | 3·0 | 22 | ·30 | ·25 | 2·682 | 4·5 | 14 | ·40 | ·30 | 4·152 |
| 1·25 | 12 | ·30 | ·25 | 1·15 | 3·0 | 20 | ·30 | ·25 | 2·702 | 4·5 | 12 | ·45 | ·30 | 4·112 |
| | | | | | 3·0 | 18 | ·30 | ·25 | 2·734 | | | | | |
| 1·5 | 24 | ·25 | ·25 | 1·268 | 3·0 | 16 | ·30 | ·25 | 2·774 | 4·75 | 24 | ·35 | ·30 | 4·360 |
| 1·5 | 22 | ·25 | ·25 | 1·282 | 3·0 | 14 | ·30 | ·25 | 2·808 | 4·75 | 22 | ·35 | ·30 | 4·376 |
| 1·5 | 20 | ·25 | ·25 | 1·302 | 3·0 | 12 | ·35 | ·25 | 2·80 | 4·75 | 20 | ·35 | ·30 | 4·396 |
| 1·5 | 18 | ·25 | ·25 | 1·33 | | | | | | 4·75 | 18 | ·35 | ·30 | 4·424 |
| 1·5 | 16 | ·30 | ·25 | 1·27 | 3·25 | 24 | ·35 | ·30 | 2·860 | 4·75 | 16 | ·40 | ·30 | 4·362 |
| 1·5 | 14 | ·30 | ·25 | 1·308 | 3·25 | 22 | ·35 | ·30 | 2·876 | 4·75 | 14 | ·40 | ·30 | 4·402 |
| 1·5 | 12 | ·30 | ·25 | 1·40 | 3·25 | 20 | ·35 | ·30 | 2·896 | 4·75 | 12 | ·45 | ·30 | 4·362 |
| | | | | | 3·25 | 18 | ·35 | ·30 | 2·924 | | | | | |
| 1·75 | 24 | ·25 | ·25 | 1·518 | 3·25 | 16 | ·40 | ·30 | 2·862 | 5·0 | 24 | ·35 | ·30 | 4·610 |
| 1·75 | 22 | ·25 | ·25 | 1·532 | 3·25 | 14 | ·40 | ·30 | 2·902 | 5·0 | 22 | ·35 | ·30 | 4·626 |
| 1·75 | 20 | ·25 | ·25 | 1·552 | 3·25 | 12 | ·45 | ·30 | 2·862 | 5·0 | 20 | ·35 | ·30 | 4·646 |
| 1·75 | 18 | ·25 | ·25 | 1·58 | 3·25 | 10 | ·45 | ·30 | 2·918 | 5·0 | 18 | ·35 | ·30 | 4·674 |
| 1·75 | 16 | ·30 | ·25 | 1·52 | 3·5 | 24 | ·35 | ·30 | 3·110 | 5·0 | 16 | ·40 | ·30 | 4·612 |
| 1·75 | 14 | ·30 | ·25 | 1·558 | 3·5 | 22 | ·35 | ·30 | 3·126 | 5·0 | 14 | ·40 | ·30 | 4·652 |
| 1·75 | 12 | ·30 | ·25 | 1·65 | 3·5 | 20 | ·35 | ·30 | 3·146 | 5·0 | 12 | ·45 | ·30 | 4·612 |
| | | | | | 3·5 | 18 | ·35 | ·30 | 3·174 | | | | | |
| 2·0 | 24 | ·30 | ·25 | 1·668 | 3·5 | 16 | ·40 | ·30 | 3·112 | 5·5 | 24 | ·35 | ·30 | 5·110 |
| 2·0 | 22 | ·30 | ·25 | 1·682 | 3·5 | 14 | ·40 | ·30 | 3·152 | 5·5 | 22 | ·35 | ·30 | 5·126 |
| 2·0 | 20 | ·30 | ·25 | 1·702 | 3·5 | 12 | ·45 | ·30 | 3·112 | 5·5 | 20 | ·35 | ·30 | 5·146 |
| 2·0 | 18 | ·30 | ·25 | 1·734 | | | | | | 5·5 | 18 | ·35 | ·30 | 5·174 |
| 2·0 | 16 | ·30 | ·25 | 1·774 | 3·75 | 24 | ·35 | ·30 | 3·360 | 5·5 | 16 | ·40 | ·30 | 5·112 |
| 2·0 | 14 | ·30 | ·25 | 1·808 | 3·75 | 22 | ·35 | ·30 | 3·376 | 5·5 | 14 | ·40 | ·30 | 5·152 |
| 2·0 | 12 | ·35 | ·25 | 1·80 | 3·75 | 20 | ·35 | ·30 | 3·396 | 5·5 | 12 | ·45 | ·30 | 5·112 |
| | | | | | 3·75 | 18 | ·35 | ·30 | 3·424 | | | | | |
| 2·25 | 24 | ·30 | ·25 | 1·918 | 3·75 | 16 | ·40 | ·30 | 3·362 | 6·0 | 24 | ·35 | ·30 | 5·610 |
| 2·25 | 22 | ·30 | ·25 | 1·932 | 3·75 | 14 | ·40 | ·30 | 3·402 | 6·0 | 22 | ·35 | ·30 | 5·626 |
| 2·25 | 20 | ·30 | ·25 | 1·952 | 3·75 | 12 | ·45 | ·30 | 3·362 | 6·0 | 20 | ·35 | ·30 | 5·646 |
| 2·25 | 18 | ·30 | ·25 | 1·984 | | | | | | 6·0 | 18 | ·35 | ·30 | 5·674 |
| 2·25 | 16 | ·30 | ·25 | 2·024 | 4·0 | 24 | ·35 | ·30 | 3·610 | 6·0 | 16 | ·40 | ·30 | 5·612 |
| 2·25 | 14 | ·30 | ·25 | 2·058 | 4·0 | 22 | ·35 | ·30 | 3·626 | 6·0 | 14 | ·40 | ·30 | 5·652 |
| 2·25 | 12 | ·35 | ·25 | 2·05 | 4·0 | 20 | ·35 | ·30 | 3·646 | 6·0 | 12 | ·45 | ·30 | 5·612 |
| | | | | | 4·0 | 18 | ·35 | ·30 | 3·674 | 6·0 | 10 | ·45 | ·30 | 5·663 |
| 2·5 | 24 | ·30 | ·25 | 2·168 | 4·0 | 16 | ·40 | ·30 | 3·612 | | | | | |
| 2·5 | 22 | ·30 | ·25 | 2·182 | 4·0 | 14 | ·40 | ·30 | 3·652 | | | | | |
| 2·5 | 20 | ·30 | ·25 | 2·202 | 4·0 | 12 | ·45 | ·30 | 3·612 | | | | | |
| 2·5 | 18 | ·30 | ·25 | 2·234 | | | | | | | | | | |

| ISSUE Nº | DATE |
|---|---|
| 4 | S.657 |

COMPILED: L. SPENCER

TRACED: OLTON DWG Co 27·10·1952

APPROVED

METHOD OF CALLING UP { A STANDARD FLANGED LIGHTENING HOLE IS CALLED UP AS :- D.H.S. 500 - 2¾ DIA.

STANDARD FLANGED LIGHTENING HOLES FOR USE ON RUBBER PRESS

DRAWING OFFICE DATA SHEET Nº 1/32A

THE DE HAVILLAND AIRCRAFT CO. LTD., HATFIELD, HERTS.

# D.H.S. 500.

SHEET Nº 2. | Nº OF SHTS. 2.

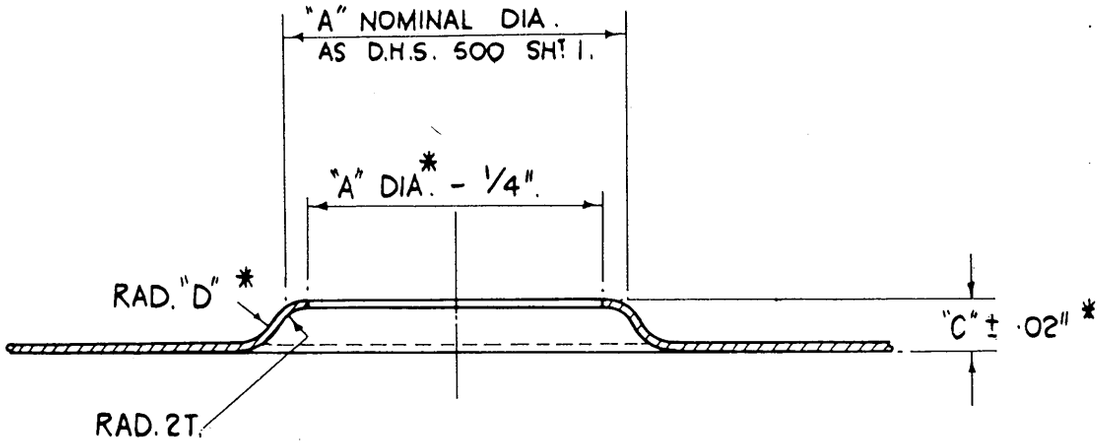


DIMNS MARKED * AS D.H.S. 500 SHT 1.

FOR COMPONENTS WHICH ARE SUBJECTED TO DEEP DRAWING OR FORMING OPERATIONS WHICH ARE NORMALLY PRODUCED BY THE DROP HAMMER, THE ABOVE TYPE OF FLANGED LIGHTENING HOLE MAY BE USED IN PLACE OF THE STANDARD FLANGED HOLE, D.H.S. 500 SHT 1, CALLED UP ON THE COMPONENT DRAWING.

THIS ALTERNATIVE TYPE OF FLANGED HOLE SHOULD ONLY BE USED AFTER FIRST ASCERTAINING THAT THE COMPONENT IS IN NO WAY IMPAIRED. E.G. CLEARANCE FOR A STRUT OR COMPONENT PASSING THROUGH THE HOLE IS NOT REDUCED.

72

| | |
|---|---|
| COMPILED. | J. McCULLOCH. |
| TRACED | |
| APPROVED. | |

STANDARD FLANGED LIGHTENING HOLES.
FOR USE WITH DROP HAMMER.

DRAWING OFFICE DATA SHEET Nº 1/32B

| | |
|---|---|
| ISSUE Nº | 1 |
| ALTERATION Nº | |

THE DE HAVILLAND AIRCRAFT CO., LTD, HATFIELD, HERTS.

# D.H.S. 501

SHEET No. 1 | No. OF SHEETS 1

THESE STIFFENING SWAGES ARE FOR USE WITH 18 S.W.G. TO 26 S.W.G. SHEET.

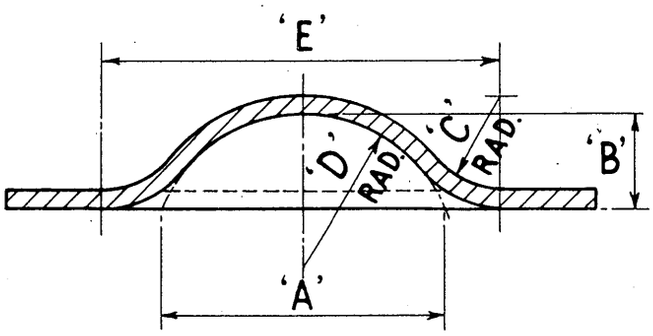


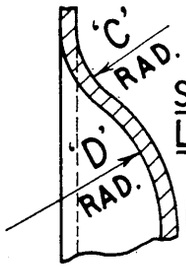


SECTION THROUGH LENGTH OF SWAGE SHOWING BLENDING INTO PLATE.

ENDS TO BE SEMI-CIRCULAR

| SWAGE No. | NOMINAL SIZE 'A' | 'B' | 'C' | 'D' | 'E' |
|---|---|---|---|---|---|
| D.H.S. 501/0 | 3/8" | ·16" | ·15" | ·19" | ·63" |
| D.H.S. 501/1 | 1/2" | ·19" | ·25" | ·26" | ·80" |
| D.H.S. 501/2 | 5/8" | ·19" | ·25" | ·35" | ·90" |
| D.H.S. 501/3 | 3/4" | ·25" | ·25" | ·40" | 1·06" |
| D.H.S. 501/4 | 7/8" | ·25" | ·25" | ·51" | 1·15" |
| D.H.S. 501/5 | 1·0" | ·25" | ·25" | ·625" | 1·25" |
| D.H.S. 501/6 | 1·25" | ·25" | ·25" | ·90" | 1·45" |

## METHOD OF CALLING UP ON DRAWING.

DRAWINGS WILL SHOW A FULL OUTLINE OF THE EXTREME EXTENT OF THE SWAGE. i.e. DIMENSION 'E' AND A DOTTED LINE OF THE NOMINAL SIZE i.e. DIMENSION 'A'. THE ENDS WILL BE SEMI-CIRCULAR AND THE LENGTH WILL BE DIMENSIONED AS THE OVERALL EXTENT OF THE SWAGE. A SECTION GIVING THE DIRECTION OF SWAGE SHOULD BE SHOWN EITHER BY A FULL SECTION OR, WHERE THIS IS NOT OTHERWISE NECESSARY, A SECTION THROUGH SWAGE, AS SHOWN AT ARROW 'Y' BELOW.

A SWAGE 3/4" NOMINAL SIZE WILL BE CALLED UP AS D.H.S. 501/3

## TYPICAL EXAMPLE.

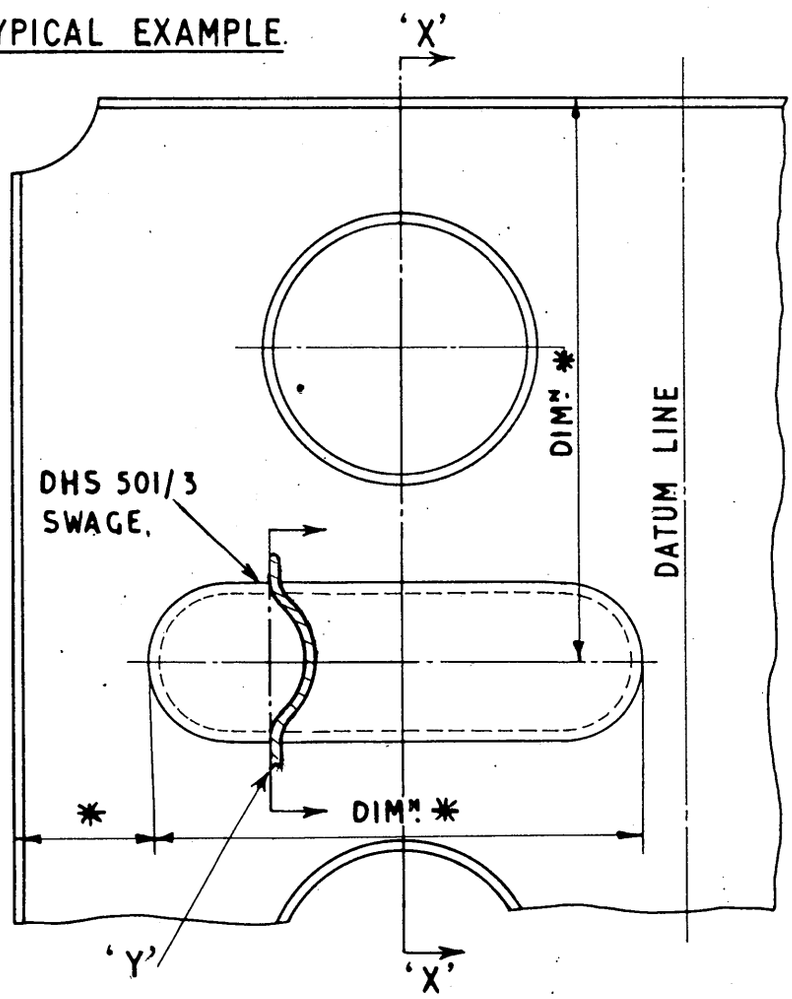


DIMn. * ARE TO BE GIVEN ON DRG.

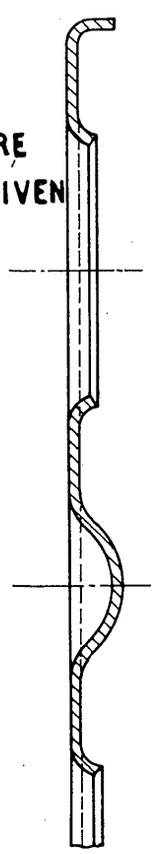

SECTION 'X-X'

| ISSUE No | DATE |
|---|---|
| 3 | AUG. '55 |

COMPILED: T. EVANS

TRACED: DOLTON DRG. Co. 23·5·55.

APPROVED

STANDARD STIFFENING SWAGES (FOR USE WITH RUBBER PRESS)

DRAWING OFFICE DATA SHEET No. 1/33

THE DE HAVILLAND AIRCRAFT Co. LTD. HATFIELD. HERTS.

# D.H.S. 502. D.H.S. 503.

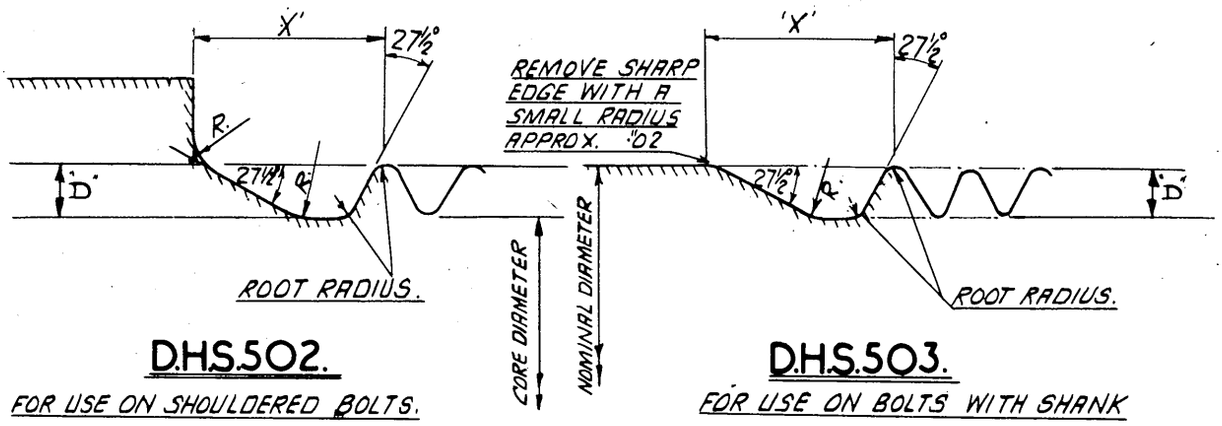


## D.H.S.502.

FOR USE ON SHOULDERED BOLTS.

## D.H.S.503.

FOR USE ON BOLTS WITH SHANK THE SAME DIAMETER AS THREAD.

| UNDERCUT No. | THREADS PER INCH. | DEPTH OF THREAD 'D' | LENGTH OF UNDERCUT 'X' | RADIUS 'R' | ROOT RADIUS | B.S.F. THREADS. (REF. ONLY) * NOMINAL DIA. | CORE DIA. |
|---|---|---|---|---|---|---|---|
| D.H.S. 502/A<br>D.H.S. 503/A | 10 | ·064" | ·23" | ·06" | ·0137" | 1" | ·872" |
| D.H.S. 502/B<br>D.H.S. 503/B | 11 | ·0582" | ·21" | ·06" | ·0125" | 7/8" | ·758" |
| D.H.S. 502/C<br>D.H.S. 503/C | 12 | ·0534" | ·195" | ·06" | ·0114" | 3/4" | ·643" |
| D.H.S. 502/D<br>D.H.S. 503/D | 14 | ·0457" | ·167" | ·06" | ·0098" | 5/8" | ·533" |
| D.H.S. 502/E<br>D.H.S. 503/E | 16 | ·040" | ·146" | ·04" | ·0086" | 1/2" | ·42" |
| D.H.S. 502/F<br>D.H.S. 503/F | 18 | ·0356" | ·13" | ·04" | ·0077" | 7/16" | ·366" |
| D.H.S. 502/G<br>D.H.S. 503/G | 20 | ·032" | ·117" | ·04" | ·0069 | 3/8" | ·311 |
| D.H.S. 502/H<br>D.H.S. 503/H | 22 | ·0291" | ·106" | ·04" | ·0062" | 5/16" | ·254" |
| D.H.S. 502/J<br>D.H.S. 503/J | 26 | ·0246" | ·09" | ·04" | ·0053" | 1/4" | ·200" |

* FOR T.P.I. ON DIAMETERS GREATER THAN 1" SEE DATA. SHT. NO. 1/3

METHOD OF CALLING UP.

GIVE CORE DIAMETER TO NEAREST $\frac{1}{1000}$" AND APPROPRIATE UNDERCUT NUMBER. E.G.

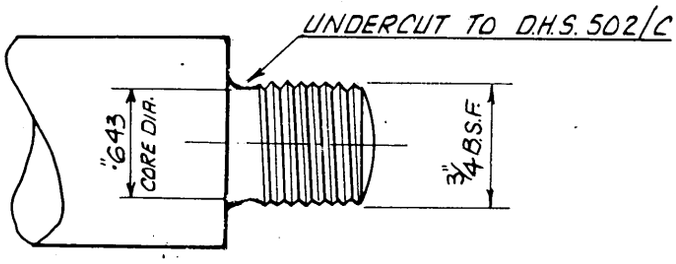


NOTE:-
FOR INTERNAL UNDERCUTS SEE D.H.S. 504.
FOR GASKET UNDERCUT SEE D.H.S. 505

| | |
|---|---|
| COMPILED | B.P. WILSON. |
| TRACED | J.W. |
| APPROVED | A.B. BAKER. |

## STANDARD EXTERNAL UNDERCUTS.

DRAWING OFFICE DATA SHT. No. 1/34

| ISSUE No. | 1 | 2 |
|---|---|---|
| ALTERATION No. | – | |

74

THE DE HAVILLAND AIRCRAFT Co. LTD. HATFIELD. HERTS. | D.H.S. 504

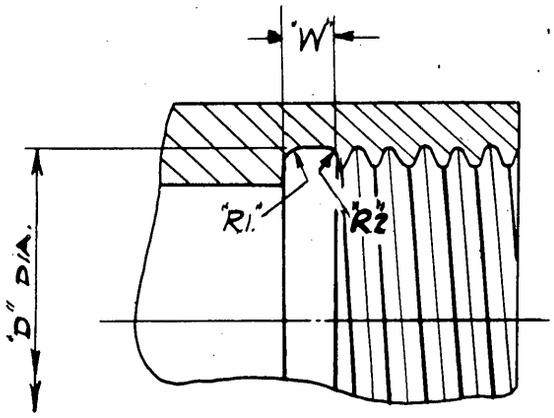


NOTE:- "D" = MAJOR DIAMETER OF THREAD.

| UNDERCUT No. | THREADS PER INCH. | "W." | "R.1." | "R.2." | * RELEVANT STD. THREADS. |
|---|---|---|---|---|---|
| D.H.S. 504/A | 28 TO 22 | ·"07 | ·"03 | ·"01 | 1/4" B.S.F. 5/16" B.S.F. 1/8" B.S.P. |
| D.H.S. 504/B | 20 TO 16 | ·"09 | ·"03 | ·"01 | 3/8", 7/16" & 1/2" B.S.F 1/4" & 3/8" B.S.P. |
| D.H.S. 504/C | 14 TO 12 | ·"12 | ·"05 | ·"02 | 5/8" & 3/4" B.S.F. 1/2" TO 7/8" B.S.P. |
| D.H.S. 504/D | 11 & 10 | ·"16 | ·"05 | ·"02 | 7/8" & 1" B.S.F. 1" B.S.P. UPWARDS |

* FOR T.P.I. OF DIAMETERS GREATER THAN 1" SEE DATA SHEET No. 1/3

METHOD OF CALLING UP ON DRAWING.

GIVE UNDERCUT DIAMETER 'D' TO NEAREST 1/1000" AND APPROPRIATE UNDERCUT NUMBER.

EXAMPLE:- FOR 7/8" B.S.F. THREAD

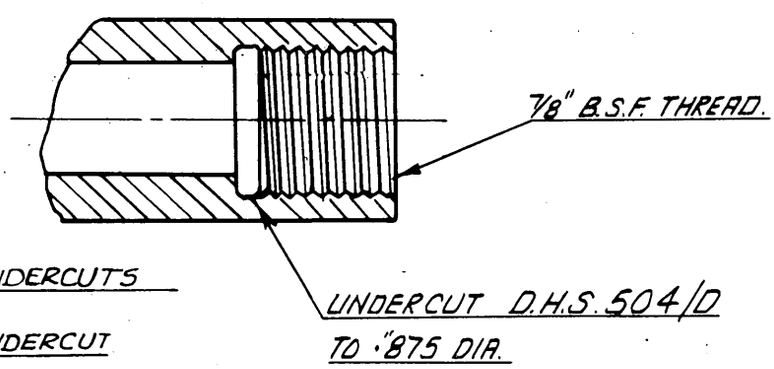


NOTE:-
FOR EXTERNAL UNDERCUTS SEE D.H.S. 502-3.
FOR GASKET UNDERCUT SEE D.H.S. 505.

| | | | |
|---|---|---|---|
| COMPILED | STANDARD INTERNAL UNDERCUTS. | DRAWING OFFICE DATA SHEET No. | 1/35. |
| B.P. WILSON | | | |
| TRACED | | | |
| J.W. | | | |
| APPROVED | ISSUE. No. 1 | | |
| A.B. BAKER | ALTERATION No. | | |

THE DE HAVILLAND AIRCRAFT COMPANY LTD., HATFIELD, HERTS

# D. H. S. 505

SHEET Nº 1 | Nº OF SHEETS 1

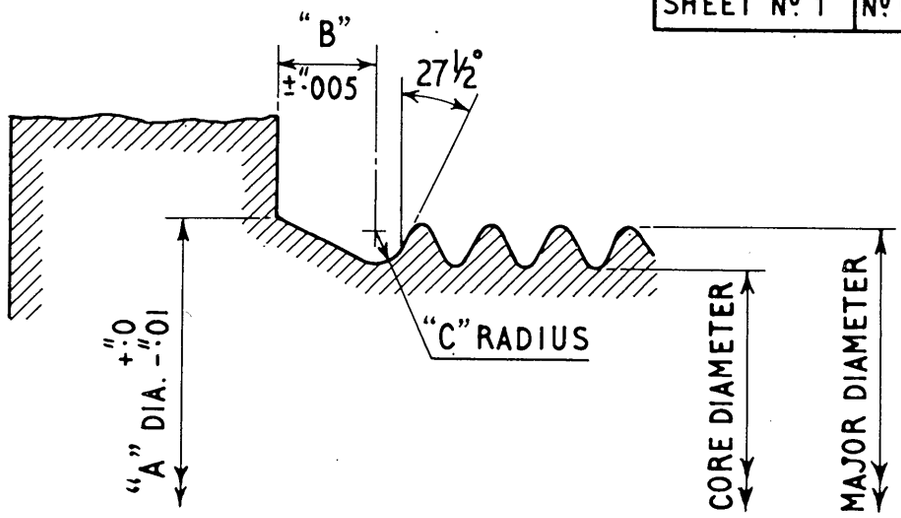


| UNDERCUT Nº | B.S.P. THREAD | DIAMETER "A" | DIMENSION "B" | RADIUS "C" | CORE DIAMETER | MAJOR DIAMETER |
|---|---|---|---|---|---|---|
| D.H.S 505/A | 1/8" | "·39 | "·05 | "·03 | "·337 | "·383 |
| D.H.S. 505/B | 1/4" | "·52 | "·07 | "·04 | "·450 | "·518 |
| D.H.S. 505/C | 19 T.P.I. WHIT. FORM "·60 O/D. | "·60 | "·07 | "·04 | "·532 | "·60 |
| D.H.S. 505/D | 3/8" | "·66 | "·07 | "·04 | "·588 | "·656 |
| D.H.S. 505/E | 14 T.P.I. WHIT. FORM "·75 O/D. | "·75 | "·10 | "·06 | "·658 | "·75 |
| D.H.S. 505/F | 1/2" | "·83 | "·10 | "·06 | "·733 | "·825 |
| D.H.S. 505/G | 5/8" | "·91 | "·10 | "·06 | "·810 | "·902 |
| D.H.S. 505/H | 3/4" | 1"·05 | "·10 | "·06 | "·949 | 1"·041 |
| D.H.S. 505/J | 7/8" | 1"·19 | "·10 | "·06 | 1"·097 | 1"·189 |
| D.H.S. 505/K | 1" | 1"·31 | "·13 | "·08 | 1"·192 | 1"·309 |
| D.H.S. 505/L | 1¼" | 1"·66 | "·13 | "·08 | 1"·533 | 1"·65 |
| D.H.S. 505/M | 1½" | 1"·89 | "·13 | "·08 | 1"·765 | 1"·882 |

**NOTE:-**

SEE D.H.S. 502-3 FOR EXTERNAL UNDERCUTS.

SEE D.H.S. 504 FOR INTERNAL UNDERCUTS.

THIS UNDERCUT IS SIMILAR TO THAT USED ON THE A.G.S. 1100 SERIES OF COUPLINGS AND IS FOR USE IN CONJUNCTION WITH GASKETS A.G.S. 1138-1139. IT SHOULD BE USED FOR ALL SPECIAL PARTS SIMILAR TO THE A.G.S. SERIES.

**METHOD OF CALLING UP :-**

E.G.

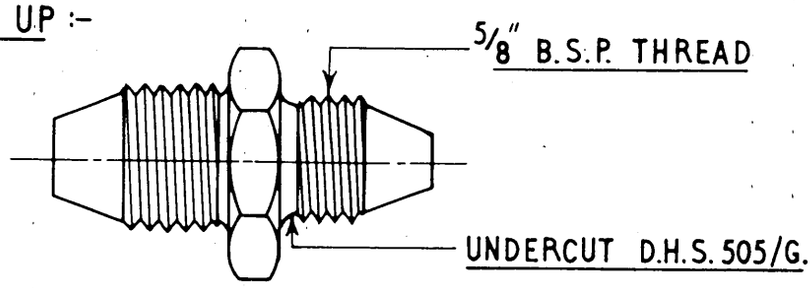


| | |
|---|---|
| COMPILED | B.P. WILSON |
| TRACED | OLTON DRAWING Co. 12. 5. 1952 |
| APPROVED | |

## STANDARD GASKET UNDERCUT

DRAWING OFFICE DATA SHEET Nº 1/36

| ISSUE Nº | 1 | 2 | | | | | | | | | |
|---|---|---|---|---|---|---|---|---|---|---|---|
| ALTERATION Nº | | S.657 | | | | | | | | | |

THE DE HAVILLAND AIRCRAFT COMPANY LTD., HATFIELD, HERTS.

TO ACHIEVE THE MAXIMUM TOOL ECONOMY AND TO ASSIST THE PRODUCTION DEPARTMENTS AS MUCH AS POSSIBLE, DRAWINGS CALLING FOR HOLES OR BLANKS SHOULD BE RESTRICTED TO THE DIAMETERS SHOWN IN THE LIST BELOW, WHEREVER POSSIBLE.

| | | | |
|---|---|---|---|
| ".312 | ".950 | 1".750 | 3".500 |
| ".343 | ".984 | 1".875 | 3".625 |
| ".375 | 1".000 | 1".940 | 3".700 |
| ".400 | 1".062 | 2".000 | 3".875 |
| ".437 | 1".093 | 2".125 | 4".000 |
| ".4687 | 1".125 | 2".156 | 4".125 |
| ".500 | 1".187 | 2".187 | 4".187 |
| ".531 | 1".218 | 2".200 | 4".250 |
| ".562 | 1".250 | 2".250 | 4".375 |
| ".600 | 1".312 | 2".312 | 4".500 |
| ".625 | 1".343 | 2".375 | 4".625 |
| ".656 | 1".350 | 2".500 | 4".750 |
| ".687 | 1".375 | 2".625 | 4".875 |
| ".718 | 1".400 | 2".700 | 5".000 |
| ".734 | 1".437 | 2".750 | 5".250 |
| ".750 | 1".500 | 2".875 | 5".350 |
| ".781 | 1".531 | 3".000 | 5".500 |
| ".800 | 1".600 | 3".125 | 5".750 |
| ".843 | 1".625 | 3".250 | 6".000 |
| ".875 | 1".656 | 3".300 | 6".500 |
| ".912 | 1".687 | 3".375 | |
| ".937 | 1".718 | 3".437 | |

77

| ISSUE Nº | DATE |
|---|---|
| 1 | |
| | |
| | |
| | |
| | |
| | |

COMPILED
L. SPENCER
TRACED
GARNET & Co
16. 10. 46
APPROVED

STANDARD CIRCULAR PUNCHES.

DRAWING OFFICE DATA SHEET Nº 1/37.

# THE DE HAVILLAND AIRCRAFT COMPANY LTD., HATFIELD, HERTS.

TO ACHIEVE THE MAXIMUM TOOL ECONOMY, AND TO ASSIST THE PRODUCTION DEPARTMENTS AS MUCH AS POSSIBLE, DRAWINGS OF COMPONENTS WHICH EMBODY A RADIUS AT THE ENDS OR ON THE CORNERS SHOULD SPECIFY THE RADII GIVEN IN THE TABLES BELOW. A LARGE RANGE OF STANDARD TOOLS HAS BEEN BUILT UP FOR THESE OPERATIONS, AND MUST BE ADHERED TO WHEREVER POSSIBLE.

## CROPPING PUNCHES FOR CORNER RADII.

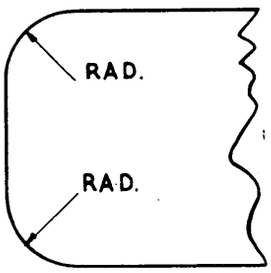


TOOLS ARE AVAILABLE FOR RADII FROM ·05 RAD. INCREASING IN ·05 STEPS TO ·50 RADIUS.
SUITABLE FOR GAUGES BETWEEN 10 S.W.G. AND 20 S.W.G.

## STANDARD CROP AND PIERCE TOOLS.

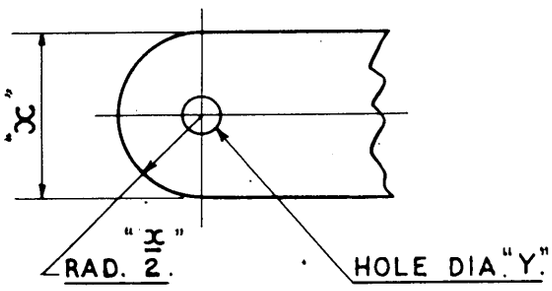


## THE FOLLOWING TOOLS ARE AVAILABLE:-

| DIA. OF HOLE DIM. "Y" | WIDTH OF BLANK DIMENSION "X" | | | | | | | | | | | | | | | | | |
|---|---|---|---|---|---|---|---|---|---|---|---|---|---|---|---|---|---|---|
| | 5/16" | ·35 | 3/8" | ·4 | 7/16" | 1/2" | ·6 | 9/16" | 5/8" | ·65 | ·7 | 3/4" | ·8 | 7/8" | ·9 | 1·0 | 1 1/8" | 1 1/4" |
| | 1/8" CLEAR | 1/8" | 3/32" | 1/8" | 3/32" | 3/32" | 1/8" | No 26 | BLANK WITHOUT HOLES | 1/8" | 1/8" | 1/8" | 1/8" | BLANK WITHOUT HOLES | 1/8" | 1/8" | 1/8" | 1/8" |
| | No 41 | | 1/8" | 5/32" | 1/8" | 1/8" | No 26. | No 11. | 1/8" | 5/32" | No 26. | No 26. | No 26. | No 26. | No 26. | 5/32" | No 26. | No 26 |
| | No 26 | | No 26. | No 11. | No 26. | 5/32" | 5/32" | | No 26 | No 11. | No 11. | 5/32" | No 11. | No 11. | 3/16" | 3/16" | No 11. | No 11. |
| | | | 3/16" | | No 11. | 3/16" | No 11. | | 3/16" | | F | No 11. | F. | F. | F. | F. | F. | F. |
| | | | | | F. | No 30. | F. | | No 11 | | | F. | P. | | P. | | | |
| | | | | | | F. | P. | | F. | | | | | | | | | |

| ISSUE No | DATE |
|---|---|
| 1 | |
| | |
| | |
| | |
| | |
| | |

COMPILED
L. SPENCER
TRACED
GARNET & Co
18. 9. 46.
APPROVED
A B Bobe

STANDARD CROP AND PIERCE TOOLS.

DRAWING OFFICE DATA SHEET No 1/38

78

# THE DE HAVILLAND AIRCRAFT COMPANY LTD, HATFIELD, HERTS.

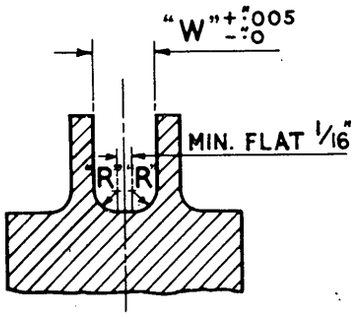


## SIDE & FACE CUTTERS WITH RADII

| | | | | | | | | | | | |
|---|---|---|---|---|---|---|---|---|---|---|---|
| W | 1/4" | 5/16" | 3/8" | 7/16" | 1/2" | 9/16" | 5/8" | 3/4" | 7/8" | 1" | |
| R | 1/32" | 1/32" | 1/32" | | | | | | | | |
| | | 1/16" | 1/16" | 1/16" | 1/16" | 1/16" | 1/16" | | | | |
| | | | 3/32" | 3/32" | 3/32" | 3/32" | 3/32" | 3/32" | | | |
| | | | | 1/8" | 1/8" | 1/8" | 1/8" | 1/8" | 1/8" | | |
| | | | | | | | 5/32" | 5/32" | 5/32" | | |
| | | | | | | | | 3/16" | 3/16" | 3/16" | |

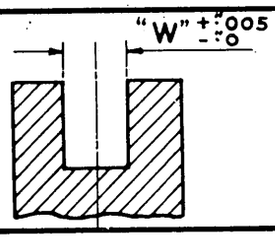


## SIDE & FACE CUTTERS WITH SHARP EDGES

| | | | | | | | | | | | |
|---|---|---|---|---|---|---|---|---|---|---|---|
| W | 1/4" | 5/16" | 3/8" | 7/16" | 1/2" | 5/8" | 3/4" | 7/8" | 1" | | |

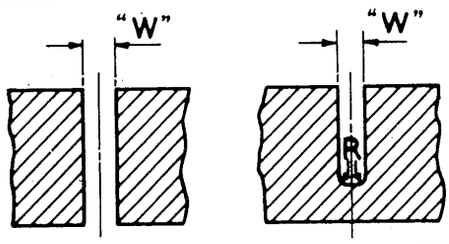


## SLITTING SAWS

| | | | | | | | | | | | |
|---|---|---|---|---|---|---|---|---|---|---|---|
| W | 1/32" | 1/16" | 3/32" | 1/8" | 5/32" | 3/16" | 7/32" | 1/8" | 5/32" | 3/16" | 7/32" |
| R | — | — | — | — | — | — | — | 1/32" | 1/32" | 1/32" | 1/32" |

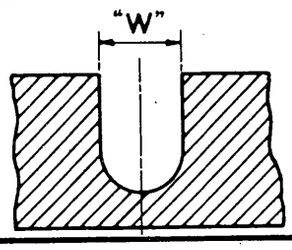


## CONVEX CUTTERS

| | | | | | | | | | | | |
|---|---|---|---|---|---|---|---|---|---|---|---|
| W | 1/8" | 3/16" | 1/4" | 5/16" | 3/8" | 7/16" | 1/2" | 9/16" | 5/8" | 11/16" | 3/4" |
| | 13/16" | 7/8" | 15/16" | 1" | | | | | | | |

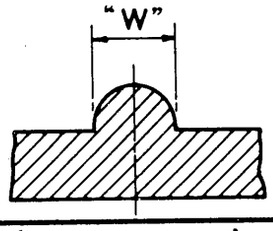


## CONCAVE CUTTERS

| | | | | | | | | | | | |
|---|---|---|---|---|---|---|---|---|---|---|---|
| W | 1/8" | 3/16" | 1/4" | 5/16" | 3/8" | 7/16" | 1/2" | 9/16" | 5/8" | 11/16" | 3/4" |
| | 13/16" | 7/8" | 15/16" | 1" | | | | | | | |

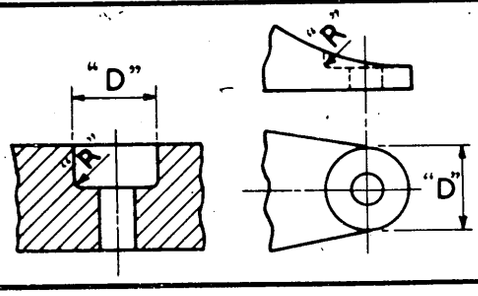


## COUNTERBORE & SPOTFACE CUTTERS

| | | | | | | | | | | | |
|---|---|---|---|---|---|---|---|---|---|---|---|
| D | 3/8" | 7/16" | 1/2" | 9/16" | 5/8" | 11/16" | 3/4" | 13/16" | 7/8" | 15/16" | 1" |
| R (MIN.) | 1/16" | 1/32" | 1/16" | 1/16" | 1/16" | 1/32" | 1/16" | 1/16" | 1/16" | 1/16" | 1/16" |
| D | 1 1/16" | 1 1/8" | 1 1/4" | 1 3/8" | 1 1/2" | 1 5/8" | 1 3/4" | | | | |
| R (MIN.) | 1/16" | 1/16" | 1/16" | 1/16" | 1/16" | 1/16" | 1/16" | | | | |

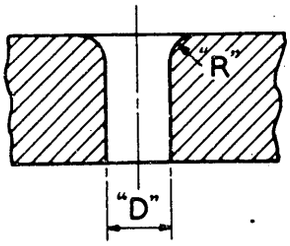


## RADIUS CUTTERS FOR RECESSING HOLES

| D | RADII | | | | | | | | | | |
|---|---|---|---|---|---|---|---|---|---|---|---|
| 3/16" | 1/32" | 1/16" | 3/32" | 1/8" | | | | | | | |
| 1/4" | 1/32" | 1/16" | 3/32" | 1/8" | | | | | | | |
| 5/16" | 1/32" | 1/16" | 3/32" | 1/8" | 3/16" | 1/4" | | | | | |
| 3/8" | 1/32" | 1/16" | 3/32" | 1/8" | 3/16" | 1/4" | | | | | |
| 7/16" | 1/32" | 1/16" | 3/32" | 1/8" | 3/16" | 1/4" | | | | | |
| 1/2" | 1/32" | 1/16" | 3/32" | 1/8" | 3/16" | 1/4" | | | | | |

79

| ISSUE No | DATE |
|---|---|
| 1 | |
| 2 | 4-11-47 |
| 3 | |
| | |
| | |
| | |

COMPILED
L. SPENCER.
TRACED
GARNET & Co
5 - 3 - '47
APPROVED

# STANDARD CUTTERS

DRAWING OFFICE DATA SHEET No 1/39

THE DE HAVILLAND AIRCRAFT COMPANY LTD., HATFIELD, HERTS.

# D.H.S. 549

SHEET No. 1. | No. OF SH'TS. 1

THE DRAWING NOTE "C'S'K. TO D.H.S. 549/-" REQUIRES THE COUNTERSINK TO BE DIMPLED INTO THE SHEET WITH A ROTATING TOOL OF APPROVED* DESIGN SUCH THAT THE COUNTERSINK WILL BE FORMED GRADUALLY TO THE DIMENSIONS GIVEN IN THIS STANDARD, WITHOUT EXCESSIVE COINING OF THE METAL ROUND THE HOLE. THE HOLE MUST BE FREE FROM BURRS AND INCIPIENT OR ACTUAL EDGE CRACKS. THE COUNTERSINK DIM'N VARIES ACCORDING TO THE TYPE OF RIVET BEING USED AND IT IS IMPORTANT THAT DRAWINGS CALL FOR THE CORRECT TYPE OF COUNTERSINK. SEE BELOW FOR EXAMPLES.

THE MAXIMUM SINGLE THICKNESS THAT CAN BE DIMPLED IS 16 S.W.G. BUT COMBINATIONS OF 18 & 19 OR 19, 20 & 24 S.W.G. REDUXED TOGETHER ARE SATISFACTORY.

EACH SUCCEEDING DIMPLED SKIN OR COMBINATION OF SKINS HAS A LARGER DIAMETER AND COUNTERSINK ANGLE THAN ITS PREDECESSOR SUCH THAT WHEN NESTED TOGETHER THE POINTS OF INTERSECTION OF THE FLAT SHEET AND THE COUNTERSINK ANGLE FORM AN INCLUDED ANGLE 16° TO THE RIVET AXIS. (SEE FIG. 2).

WHERE A THICK COMPONENT IS TO BE COUNTERSUNK TO RECEIVE ONE OR A NUMBER OF DIMPLED SHEETS IT WILL BE CUT COUNTERSUNK TO DIMENSIONS GIVEN IN TABLES BELOW. THE DRAWING WILL DETAIL DIM. 'D' AND THE ANGLE REQUIRED AND WILL CALL UP :- "C'S'K. TO D.H.S. 549".

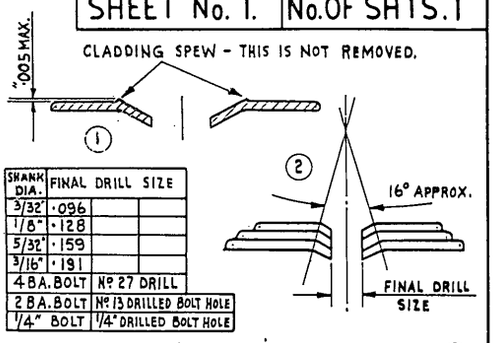


| SHANK DIA. | FINAL DRILL SIZE | |
|---|---|---|
| 3/32" | ·096 | |
| 1/8" | ·128 | |
| 5/32" | ·159 | |
| 3/16" | ·191 | |
| 4 BA. BOLT | Nº 27 DRILL | |
| 2 BA. BOLT | Nº 13 DRILLED BOLT HOLE | |
| 1/4" BOLT | 1/4" DRILLED BOLT HOLE | |

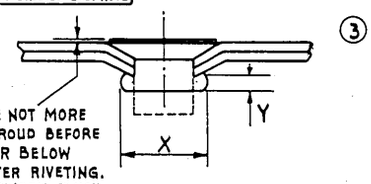


RIVET TO BE NOT MORE THAN ·005 PROUD BEFORE RIVETING, NOR BELOW SURFACE AFTER RIVETING. TARGET - BETWEEN FLUSH AND ·002 PROUD.

| RIVET DIA. | X DIA. APPROX. | Y, APPROX. | |
|---|---|---|---|
| 3/32" | 9/64" | 3/64" | |
| 1/8" | 3/16" | 1/16" | |
| 5/32" | 15/64" | 5/64" | |
| 3/16" | 9/32" | 3/32" | |

METHOD OF CALLING UP.

SOLID RIVETS. 120° C'S'K. DRAWINGS WILL CALL UP C'S'K. TO D.H.S. 549/S.
"CHOBERT" RIVETS. 120° C'S'K. " " " " C'S'K. TO D.H.S. 549/C.
BOLTS. 120° C'S'K. " " " " C'S'K. TO D.H.S. 549/B.
AS APPLICABLE, AND GIVE SIZE AND QUANTITY OF RIVETS REQUIRED.

SIZES OF HOLES WILL NOT BE DETAILED AS THEY ARE GIVEN ON THE ENGINEERING LAYOUT AS PART OF A SEQUENCE OF OPERATIONS WHICH ARE :- 1. DRILL & REAM PILOT HOLE. 2. DE-BURR. 3. FORM DIMPLE. 4. DRILL & REAM TO FINAL SIZE. 5. DE-BURR.
AN INSPECTION PROCEDURE IS CARRIED OUT BETWEEN OPERATIONS 2 & 3 AND AFTER OPERATION 5.

* APPROVED TOOLS & PRACTICES ARE GIVEN IN TECH. MEMO Nº 1 ISSUED BY A/C ENGINEERING DEPT.

## ONE SKIN DIMPLED

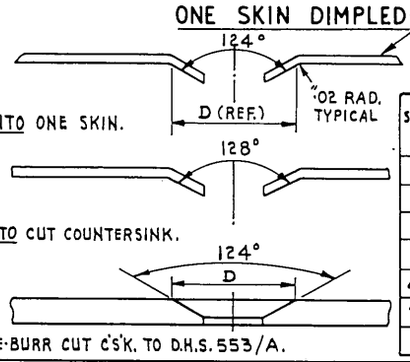


| SHANK DIA. | SOLID DIA. D | CHOBERT DIA. D | |
|---|---|---|---|
| 3/32" | ·205 | | |
| 1/8" | ·264 | ·227 | |
| 5/32" | ·332 | ·267 | |
| 3/16" | ·392 | ·362 | |
| 4 BA. BOLT | | ·296 | |
| 2 BA. BOLT | | ·382 | |
| 1/4" B.S.F. | | ·512 | |

## 2 SKINS DIMPLED

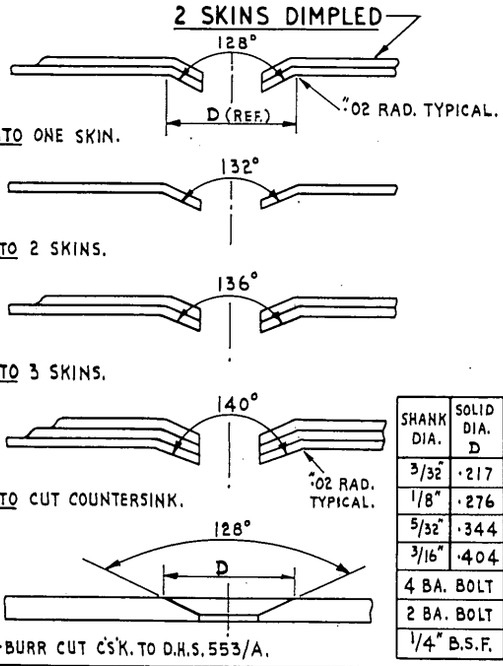


| SHANK DIA. | SOLID DIA. D | CHOBERT DIA. D | |
|---|---|---|---|
| 3/32" | ·217 | | |
| 1/8" | ·276 | ·244 | |
| 5/32" | ·344 | ·284 | |
| 3/16" | ·404 | ·379 | |
| 4 BA. BOLT | | ·313 | |
| 2 BA. BOLT | | ·399 | |
| 1/4" B.S.F. | | ·529 | |

## 3 SKINS DIMPLED

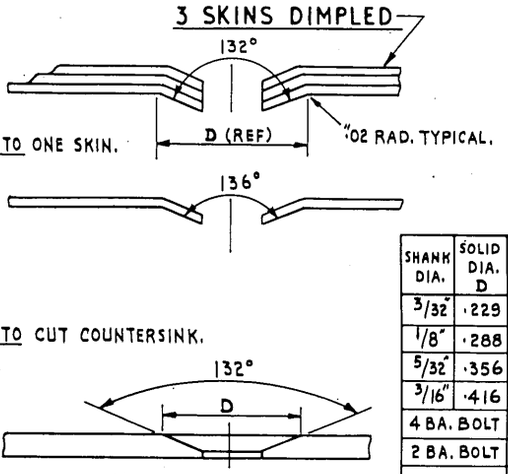


| SHANK DIA. | SOLID DIA. D | CHOBERT DIA. D | |
|---|---|---|---|
| 3/32" | ·229 | | |
| 1/8" | ·288 | ·261 | |
| 5/32" | ·356 | ·301 | |
| 3/16" | ·416 | ·396 | |
| 4 BA. BOLT | | ·330 | |
| 2 BA. BOLT | | ·416 | |
| | | | |

## 4 SKINS DIMPLED

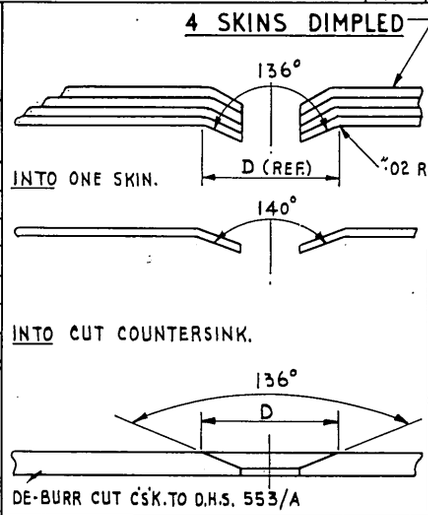


| SHANK DIA. | SOLID DIA. D | CHOBERT DIA. D | |
|---|---|---|---|
| 3/32" | ·241 | | |
| 1/8" | ·300 | ·278 | |
| 5/32" | ·368 | ·318 | |
| 3/16" | ·428 | ·413 | |
| 4 BA. BOLT | | ·347 | |
| 2 BA. BOLT | | ·433 | |
| | | | |

## 5 SKINS DIMPLED

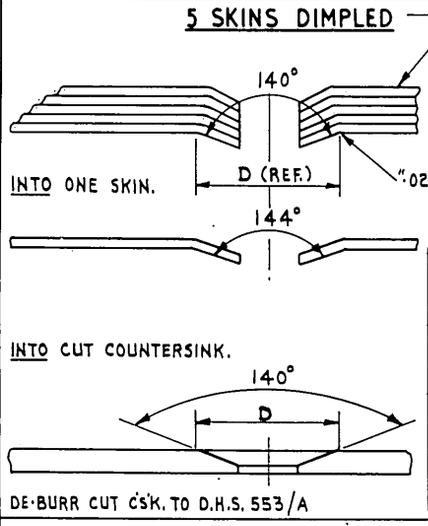


| SHANK DIA. | SOLID DIA. D | CHOBERT DIA. D | |
|---|---|---|---|
| 3/32" | ·253 | | |
| 1/8" | ·312 | | |
| 5/32" | ·380 | | |
| 3/16" | ·440 | | |
| 4 BA. BOLT | | | |
| 2 BA. BOLT | | | |
| | | | |

## 6 SKINS DIMPLED

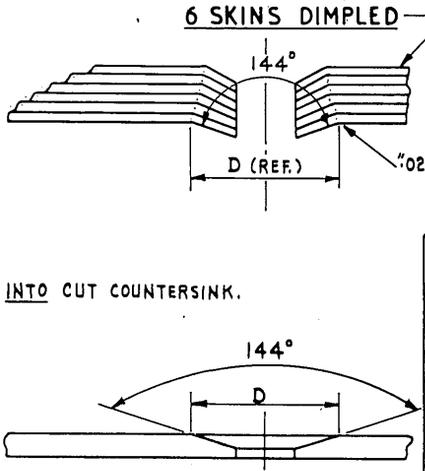


| SHANK DIA. | SOLID DIA. D | CHOBERT DIA. D | |
|---|---|---|---|
| 3/32" | ·265 | | |
| 1/8" | ·324 | | |
| 5/32" | ·392 | | |
| 3/16" | ·452 | | |
| 4 BA. BOLT. | | | |
| 2 BA. BOLT | | | |
| | | | |

| ISSUE Nº | DATE |
|---|---|
| 1 | AUG. '55. |
| 2 | S. 846 |
| | |
| | |
| | |

COMPILED
L. SPENCER.
TRACED
L. B.
APPROVED

# COUNTERSINKS, MACHINE SPIN DIMPLED.

DRAWING OFFICE DATA SHEET No. 1/40A

| D.H.S. 523 | |
|---|---|
| SHEET Nº 1 | Nº OF SHEETS 1 |

# SPOTFACES ON MACHINED PARTS

ALL SPOTFACES CALLED UP ON D.H. DRAWINGS ARE REQUIRED TO HAVE A 1/16" CORNER RADIUS. (REF. D.O.I. 10425.)

GIVEN BELOW IN TABLE 'A' ARE THE MINIMUM SIZES OF SPOTFACES THAT WILL ACCOMMODATE BOLT HEADS, NUTS AND WASHERS FOR SIZES BETWEEN 2 B.A. AND 1/2" B.S.F.

TABLE 'B' GIVES THE SIZES OF SPOTFACES NECESSARY ON COMPONENTS WHERE THERE IS INSUFFICIENT ROOM TO USE AN OPEN ENDED SPANNER, AND THE ONLY METHOD OF TIGHTENING DOWN IS WITH EITHER A BOX OR SOCKET SPANNER.

| | SPOTFACE CUTTER SIZES | | | |
|---|---|---|---|---|
| | BOLT HEADS (UNDERSIDE) AND THIN NUTS (15° CHAMFER) STANDARD NUTS (30° CHAMFER) | | ANY NUT OR BOLT IN CONJUNCTION WITH A PLAIN S.P. WASHER. | |
| | 'A' | 'B' | 'A' | 'B' |
| | 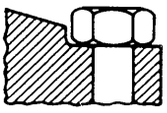 | 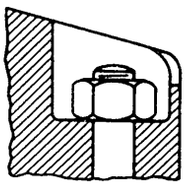 | 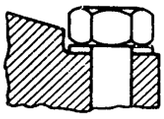 | 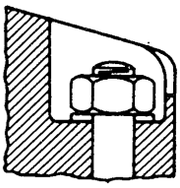 |
| BOLT SIZE | | | | |
| 2 B.A. | 7/16" | 9/16" | 1/2" | 9/16" |
| 1/4" B.S.F. | 5/8" | 3/4" | 11/16" | 3/4" |
| 5/16" B.S.F. | 11/16" | 13/16" | 3/4" | 13/16" |
| 3/8" B.S.F. | 3/4" | 15/16" | 13/16" | 15/16" |
| 7/16" B.S.F. | 7/8" | 1 1/16" | 15/16" | 1 1/16" |
| 1/2" B.S.F. | 1" | 1 1/4" | 1 1/16" | 1 1/4" |
| | | | | |
| | | | | |

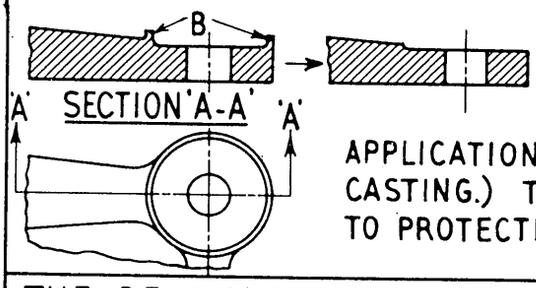


NOTE:- A SUFFICIENTLY LARGE SPOTFACE SHOULD BE CALLED FOR TO REMOVE ALL SURPLUS MATERIAL 'B' IN SUCH APPLICATIONS AS SHOWN. (ALLOW FOR OVERSIZE CASTING.) THIS IS IMPORTANT TO PREVENT DAMAGE TO PROTECTIVE TREATMENT BY SPANNERS, ETC.

THE DE HAVILLAND AIRCRAFT COMPANY LTD., HATFIELD, HERTS.

| SPEC | MATERIAL | FINISH | DESCRIPTION | DRAWN | D.L. BYGRAVE |
|---|---|---|---|---|---|
| | | | MINIMUM SPOTFACE SIZES FOR MACHINED COMPONENTS | TRACED | DOLTON DRAWING CO. 12. 12. 1949. |
| | | | | APPROVED | |
| ISSUE Nº | 1 | | | DRAWING OFFICE DATA SHEET Nº | 1/41 |
| MOD. Nº | | | | | |

DE HAVILLAND AIRCRAFT CO. LTD.
AIRCRAFT DIVISION
TECHNICAL LIBRARY
HATFIELD, HERTS.

THE DE HAVILLAND AIRCRAFT COMPANY LTD., HATFIELD, HERTS.

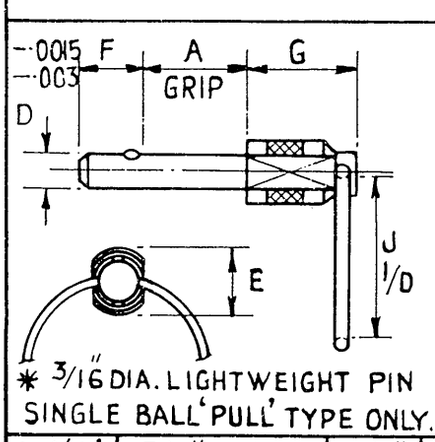


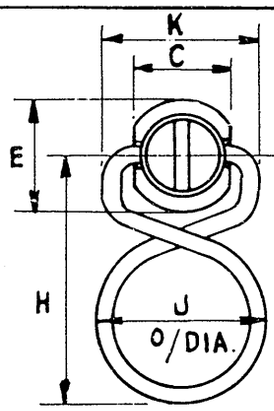


TYPE 'A' PUSH-PULL TYPE

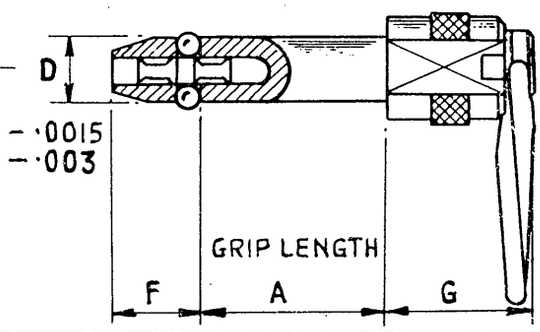


| DIA 'D' | 3/16" * | 1/4" | 5/16" | 3/8" | 7/16" | 1/2" | 9/16" | 5/8" | 3/4" | 7/8" | 1" |
|---|---|---|---|---|---|---|---|---|---|---|---|
| C | | ·365 | ·445 | ·525 | ·525 | ·710 | ·710 | ·920 | ·920 | 1·10 | 1·10 |
| E | ·375 | ·438 | ·500 | ·625 | ·625 | ·813 | ·813 | 1·00 | 1·00 | 1·25 | 1·25 |
| F | ·23 | ·41 | ·47 | ·52 | ·52 | ·6 | ·68 | ·74 | ·80 | ·93 | 1·08 |
| G | ·58 | ·72 | ·78 | ·86 | ·86 | ·93 | ·99 | 1·08 | 1·20 | 1·33 | 1·50 |
| H | | 1·31 | 1·31 | 1·39 | 1·39 | 1·51 | ·51 | 1·78 | 1·78 | 1·89 | 1·89 |
| J | 1·0 | ·94 | ·94 | ·99 | ·99 | ·99 | ·99 | 1·14 | 1·14 | 1·14 | 1·14 |
| K | | ·66 | ·66 | ·86 | ·86 | 1·04 | 1·04 | 1·32 | 1·32 | 1·50 | 1·50 |
| LENGTH 'A' | PART NUMBERS. | | | | | | | | | | |
| ·2 | 5255A 302 | | | | | | | | | | |
| ·3 | 5255A 303 | A 403 | | | | | | | | | |
| ·4 | 5255A 304 | | A 504 | | | | | | | | |
| ·5 | 5255A 305 | A 405 | | A 605 | | | | | | | |
| ·6 | 5255A 306 | | A 506 | | A 706 | | | | | | |
| ·7 | 5255A 307 | A 407 | | A 607 | | A 807 | | | | | |
| ·8 | | | A 508 | | A 708 | | | | | | |
| ·9 | | A 409 | | A 609 | | A 809 | | | | | |
| 1·0 | | | A 510 | | A 710 | | A 910 | | | | |
| 1·1 | | A 411 | | A 611 | | A 811 | | A 1011 | | | |
| 1·2 | | | A 512 | | A 712 | | A 912 | | | | |
| 1·3 | | A 413 | | A 613 | | A 813 | | A 1013 | | | |
| 1·4 | | | A 514 | | A 714 | | A 914 | | A 1214 | | |
| 1·5 | | A 415 | | A 615 | | A 815 | | A 1015 | | | |
| 1·6 | | | A 516 | | A 716 | | A 916 | | A 1216 | | |
| 1·7 | | A 417 | | A 617 | | A 817 | | A 1017 | | A 1417 | |
| 1·8 | | | A 518 | | A 718 | | A 918 | | A 1218 | | |
| 1·9 | | A 419 | | A 619 | | A 819 | | A 1019 | | A 1419 | |
| 2·0 | | | A 520 | | A 720 | | A 920 | | A 1220 | | A 1620 |
| 2·1 | | A 421 | | A 621 | | A 821 | | A 1021 | | A 1421 | |
| 2·2 | | | A 522 | | A 722 | | A 922 | | A 1222 | | A 1622 |
| 2·3 | | | | A 623 | | A 823 | | A 1023 | | A 1423 | |
| 2·4 | | | | | A 724 | | A 924 | | A 1224 | | A 1624 |
| 2·5 | | | | | | A 825 | | A 1025 | | A 1425 | |
| 2·6 | | | | | | | A 926 | | A 1226 | | A 1626 |
| 2·7 | | | | | | A 827 | | A 1027 | | A 1427 | |
| 2·8 | | | | | | | A 928 | | A 1228 | | A 1628 |
| 2·9 | | | | | | | | A 1029 | | A 1429 | |
| 3·0 | | | | | | | A 930 | | A 1230 | | A 1630 |
| 3·1 | | | | | | | | A 1031 | | A 1431 | |
| 3·2 | | | | | | | | | A 1232 | | A 1632 |
| 3·3 | | | | | | | | A 1033 | | A 1433 | |
| 3·4 | | | | | | | | | A 1234 | | A 1634 |
| 3·5 | | | | | | | | | | A 1435 | |
| 3·6 | | | | | | | | | A 1236 | | A 1636 |
| 3·7 | | | | | | | | | | A 1437 | |
| 3·8 | | | | | | | | | | | A 1638 |
| 3·9 | | | | | | | | | | A 1439 | |
| 4·0 | | | | | | | | | | | A 1640 |

THESE PINS ARE NORMALLY USED IN HOLES OF NOMINAL DIAMETER; BUT FOR MAXIMUM STRENGTH VALUES, PARTICULARLY IN TENSION, HOLES SHOULD BE REAMED.

| ISSUE No | DATE |
|---|---|
| 3 | MAR '55 |

COMPILED L. SPENCER.
TRACED D.P.
APPROVED

MATERIAL. HIGH TENSILE STEEL. SPEC. S. 96 FINISH. CADMIUM

METHOD OF CALLING UP.

A TYPE 'A' PIN 1/2" DIA. WITH 1".5 GRIP LENGTH WILL BE :-

(A 815) 'PIP' QUICK RELEASE PIN.

A 3/16" DIA. LIGHTWEIGHT TYPE WITH ".5 GRIP LENGTH WILL BE:—5255A / 305

# 'PIP' QUICK RELEASE PINS

DRAWING OFFICE DATA SHEET No 1/42A

THE DE HAVILLAND AIRCRAFT COMPANY LTD., HATFIELD, HERTS.

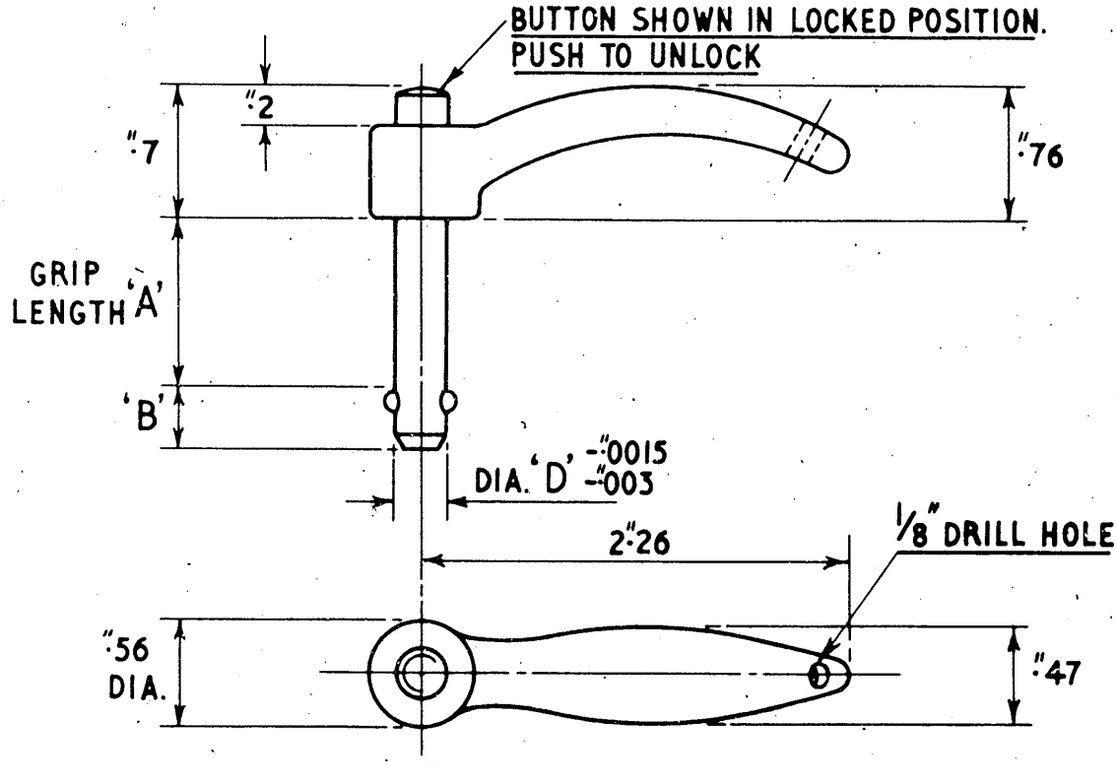


| SHANK DIA. 'D' | 1/4" | 5/16" | 3/8" |
|---|---|---|---|
| DIMN. 'B' | ".30 | ".32 | ".35 |
| GRIP LENGTH 'A' | PART NUMBERS | | |
| ".3 | 5134/403 | | |
| ".4 | | 5134/504 | |
| ".5 | 5134/405 | | 5134/605 |
| ".6 | | 5134/506 | |
| ".7 | 5134/407 | | 5134/607 |
| ".8 | 5134/408 | 5134/508 | |
| ".9 | 5134/409 | | 5134/609 |
| 1".0 | | 5134/510 | |
| 1".1 | 5134/411 | | 5134/611 |
| 1".2 | | 5134/512 | |
| 1".3 | 5134/413 | | 5134/613 |
| 1".4 | | 5134/514 | |
| 1".5 | 5134/415 | | 5134/615 |
| 1".6 | | 5134/516 | |
| 1".7 | 5134/417 | | 5134/617 |
| 1".8 | | 5134/518 | |
| 1".9 | 5134/419 | | 5134/619 |
| 2".0 | | 5134/520 | |
| 2".1 | 5134/421 | | 5134/621 |
| 2".2 | | 5134/522 | |
| 2".3 | 5134/423 | | 5134/623 |
| 2".4 | | 5134/524 | |
| 2".5 | 5134/425 | | 5134/625 |
| 2".6 | | 5134/526 | |
| 2".7 | 5134/427 | | 5134/627 |
| 2".8 | | 5134/528 | |

GRIP LENGTHS OTHER THAN THOSE LISTED CAN BE OBTAINED TO SPECIAL ORDER.

82A.

METHOD OF CALLING UP.

A PUSH TYPE 'PIP' PIN 1/4" DIA. WITH GRIP LENGTH OF 1".5 WILL BE

5134/415 PUSH TYPE 'PIP' PIN WITH HANDLE.

| ISSUE No. | DATE |
|---|---|
| 1 | JAN. '53 |
| 2 | MAR'55 |
| | |
| | |
| | |

COMPILED
L. SPENCER
TRACED
DOLTON DRG Co. 18. 9. 52
APPROVED

PUSH TYPE "PIP" PIN (WITH HANDLE)

DRAWING OFFICE DATA SHEET No. 1/42B

# THE DE HAVILLAND A/C Co LTD., HATFIELD, HERTS

PRE-ASSEMBLED SELF-EJECTING 'DZUS' FASTENERS

FASTENER, EJECTOR SPRING AND GROMMET ARE ONE UNIT FIXED TO MOVABLE PANEL.

| FASTENER TYPE | DIA. 'A' | DIA. 'B' | DRILL PANEL 'P' | DRILL PANEL 'Q' |
|---|---|---|---|---|
| EF 5 | 5/16" | 5/8" | 15/32" | 3/8" |
| EF 6 | 3/8" | 3/4" | 19/32" | 7/16" |

BEDDING TAPE BESTOBEL J 29 (SUITABLE KEROSENE RESISTANT ADHESIVE. BOSTIK 1754)

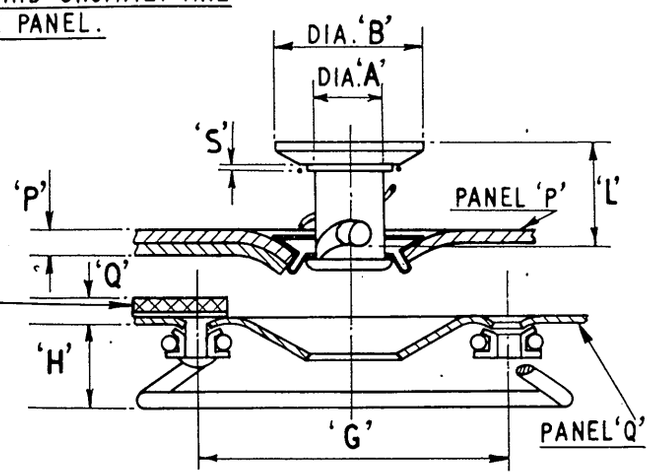


## PART NUMBERS

| PANEL THICKNESS 'P' | ·050 – ·070 | ·070 – ·090 | ·090 – ·110 | ·110 – ·125 |
|---|---|---|---|---|
| 'S' DIMENSION | ·050 | ·070 | ·090 | ·110 |
| GROUP INDEX | 'A' | 'B' | 'C' | 'D' |
| 'L' DIMENSION | | | | |
| ·350 | EF5 – 35A – DS | | | |
| ·400 | EF5 – 40A – DS | | | |
| ·450 | EF5 – 45A – DS | EF5 – 45B – DS | | |
| | EF6 – 45A – DS | EF6 – 45B DS | EF6 – 45C – DS | EF6 – 45D – DS |
| ·500 | EF5 – 50A – DS | EF5 – 50B – DS | EF5 – 50C – DS | |
| | EF6 – 50A – DS | EF6 – 50B – DS | EF6 – 50C – DS | EF6 – 50D – DS |
| ·550 | | | | |
| | EF6 – 55A – DS | EF6 – 55B – DS | EF6 – 55C – DS | EF6 – 55D – DS |
| ·600 | | EF5 – 60B – DS | EF5 – 60C – DS | EF5 – 60D – DS |
| | | EF6 – 60B – DS | EF6 – 60C – DS | EF6 – 60D – DS |
| ·650 | | EF5 – 65B – DS | EF5 – 65C – DS | EF5 – 65D – DS |
| | | EF6 – 65B – DS | EF6 – 65C – DS | EF6 – 65D – DS |
| ·700 | | | EF5 – 70C – DS | EF5 – 70D – DS |
| | | | EF6 – 70C – DS | EF6 – 70D – DS |

TO SELECT LENGTH OF FASTENER.

1. ADD P + Q + H AND SUBTRACT SPRING DEFLECTION.

**NOTE:** P = PANEL THICKNESS + ANY STIFFENER TO BE GRIPPED BY GROMMET.
Q = STRUCTURE + BEDDING TAPE. (IF BEDDING TAPE IS ATTACHED TO PANEL 'P' ITS THICKNESS MUST STILL BE ADDED TO 'Q'.)

2. SELECT FASTENER WITH 'L' DIMENSION NEAREST TO REQUIRED LENGTH.
3. IF REQUIRED LENGTH IS LESS THAN 'L' DIMENSION OF FASTENER SELECTED ADD WASHERS UNDER SPRING TO EQUAL THE DIFFERENCE.

METHOD OF CALLING UP FASTENER.

| EF5 | / | 35A | / | DS |
|---|---|---|---|---|
| SELF-EJECTOR TYPE | | LENGTH IN 1/100" & GROUP INDEX | | DEEP SLOT |

TYPE 'S' SPRING FIXED TO STRUCTURE.

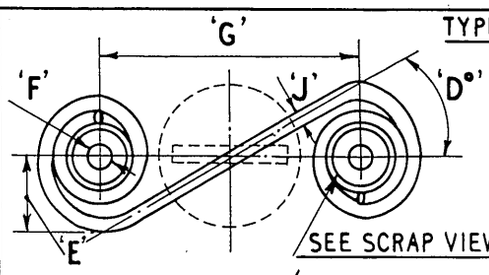


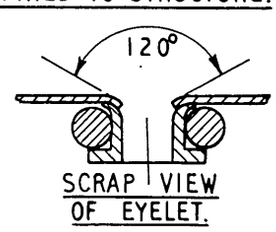


**NOTE:** PART Nº OF SPRING IS SELECTED BEFORE LENGTH OF FASTENER IS CALCULATED.

**NOTE** THE SUFFIX /D12 DENOTES 120° C'S'K. IN EYELET AND WILL BE USED IN CONJUNCTION WITH 120° C'S'K. DIMPLE IN SKIN. THIS MODIFIED SPRING IS ALSO SUITABLE FOR USE WITH CUT C'S'K. IN SKIN AND ELIMINATES THE RIVET BURR PREVIOUSLY CALLED FOR. (REF. D.O.I. 10363.)

| SPRING PART Nos | FOR FASTENER | H | RECOMMENDED DEFLECTION | TENSION lbs. | E | F | G | J | D° |
|---|---|---|---|---|---|---|---|---|---|
| S5 300 D12 | EF5 | ·300 | ·047 | 45 | 9/32" | 1/8" | 1" | ·080 | 30° |
| S5 325 D12 | | ·325 | | | | | | | |
| S6 400 D12 | EF6 | ·400 | ·062 | 55 | 5/16" | 1/8" | 1 3/8" | ·090 | 23° |
| S6 425 D12 | | ·425 | | | | | | | |

| ISSUE Nº | DATE |
|---|---|
| 1 | AUG.'55 |
| | |
| | |
| | |

| | |
|---|---|
| DRAWN | T. EVANS. |
| TRACED | |
| D.P. | |
| APPROVED | |

# DZUS FASTENERS (COUNTERSUNK SELF-EJECTING TYPE)

DRAWING OFFICE DATA SHEET Nº 1/43A

# THE DE HAVILLAND AIRCRAFT COMPANY LTD., HATFIELD, HERTS.

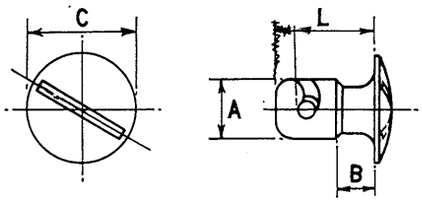


## FASTENER-TYPES 'A'-'AJ'.

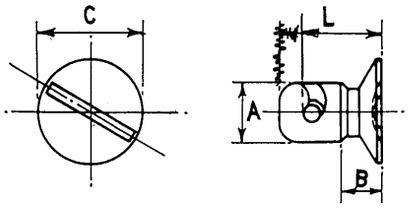


## FASTENER-TYPES 'F'-'FJ'.

| TYPE DESIGNATION | A | C | PART Nº | 20 | 25 | 30 | 35 | 40 | 45 | 50 |
|---|---|---|---|---|---|---|---|---|---|---|
| | | | DIM. L | ·20 | ·25 | ·30 | ·35 | ·40 | ·45 | ·50 |
| A3 | 3/16" | 5/16" | DIM. B | ·05 | ·05 | ·05 | | | | |
| A4 | 1/4" | 7/16" | DIM. B | | ·08 | ·08 | ·08 | | | |
| A5 | 5/16" | 9/16" | DIM. B | | | ·10 | ·10 | ·10 | | |
| A 6½ | 13/32" | 11/16" | DIM. B | | | | | ·125 | | |
| AJ 3 | 3/16" | 5/16" | DIM. B | | ·075 | ·10 | ·15 | | | |
| AJ 4 | 1/4" | 7/16" | DIM. B | | | ·10 | ·15 | ·20 | | |
| AJ 5 | 5/16" | 9/16" | DIM. B | | | | ·125 | ·19 | ·19 | ·25 |
| AJ6½ | 13/32" | 11/16" | DIM. B | | | | | ·188 | | |

| TYPE DESIGNATION | A | C | PART Nº | 20 | 25 | 30 | 35 | 40 | 45 | 50 |
|---|---|---|---|---|---|---|---|---|---|---|
| | | | DIM L | ·20 | ·25 | ·30 | ·35 | ·40 | ·45 | ·50 |
| F3 | 3/16" | 5/16" | DIM D | | ·10 | ·10 | ·10 | | | |
| F4 | 1/4" | 7/16" | DIM. B | | ·125 | ·15 | ·15 | ·15 | | |
| FJ3 | 3/16" | 5/16" | DIM. B | | | ·15 | ·175 | ·20 | | |
| FJ4 | 1/4" | 7/16" | DIM. B | | | | ·175 | ·20 | ·225 | |

NOTE. FASTENERS TYPE A3-AJ3 & F3-FJ3 ARE ONLY TO BE USED INSIDE AN AIRCRAFT AND TO BE CONFINED TO VERY LIGHT APPLICATIONS.

FOR 5/16" & 3/8" COUNTERSUNK 'SELF-EJECTING' TYPES SEE DATA SHEET Nº 1/43A

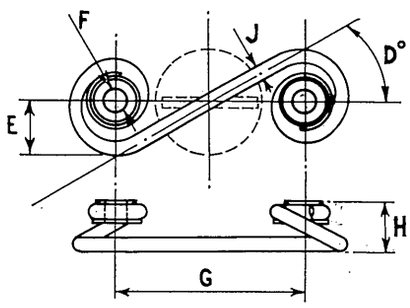


## SPRING-TYPE 'S'.

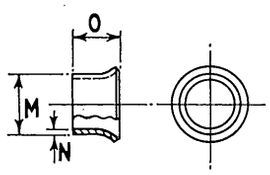


## GROMMET TYPE 'G.A.'

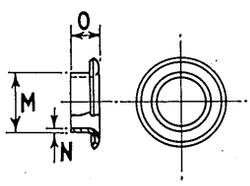


## GROMMET TYPE 'G.F.'

| PART Nº | FOR USE WITH FASTENER TYPE | RECOMMENDED DEFLECTION | TENSION LBS. | E | F | G | H | J | D° |
|---|---|---|---|---|---|---|---|---|---|
| S3-150 D12<br>S3-175 D12 | A3-AJ3 | ·04 | 20 | 5/32" | 3/32" | 5/8" | ·150<br>·175 | ·045 | 25° |
| S4-200 D12<br>S4-225 D12 | A4-AJ4 | ·045 | 30 | 13/64" | 3/32" | 3/4" | ·200<br>·225 | ·062 | 28° |
| S5-200 D12<br>S5-225 D12 | A5-AJ5 | ·047 | 45 | 9/32" | 1/8" | 1·0 | ·200<br>·225 | ·080 | 30° |
| S6-250 D12<br>S6-275 D12 | A6½-AJ6½ | ·062 | 55 | 5/16" | 1/8" | 1 3/8" | ·250<br>·275 | ·090 | 23° |
| S3-200 D12<br>S3-225 D12 | F3-FJ3 | ·04 | 20 | 5/32" | 3/32" | 5/8" | ·200<br>·225 | ·045 | 25° |
| S4-250 D12<br>S4-275 D12 | F4-FJ4 | ·045 | 30 | 13/64" | 3/32" | 3/4" | ·250<br>·275 | ·062 | 28° |

| PART Nº | FOR USE WITH FASTENER TYPE | M | N | O | MAX. THICKNESS OF PANEL |
|---|---|---|---|---|---|
| GA3-175 | A3-AJ3 | 7/32" | ·015 | ·175 | ·025 |
| GA4-250 | A4-AJ4 | 5/16" | ·025 | ·250 | ·050 |
| GA5-312<br>GA5-375 | A5-AJ5 | 3/8" | ·028 | ·312<br>·375 | ·062<br>·125 |
| GA6½-375<br>GA6½-500 | A6½-AJ6½ | 1/2" | ·035 | ·375<br>·500 | ·095<br>·200 |
| NONE | F3-FJ3 | — | — | — | — |
| GF4-150 | F4-FJ4 | 5/16" | ·025 | ·150 | ·062 |

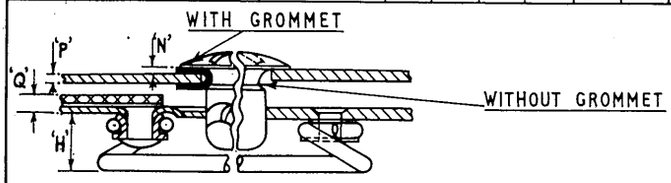


TYPICAL ASSEMBLY ('A'-'AJ' TYPE)

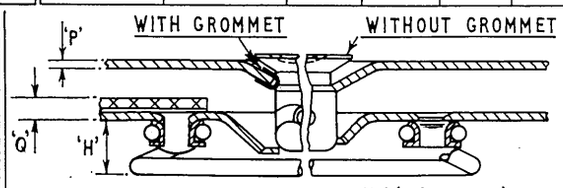


TYPICAL ASSEMBLY ('F'-'FJ' TYPE.)

## TO SELECT LENGTH OF FASTENER

1. ADD P+Q+H AND SUBTRACT SPRING DEFLECTION.
   P = PANEL THICKNESS + ANY STIFFENER TO BE GRIPPED BY GROMMET.
   Q = STRUCTURE + BEDDING TAPE. (IF BEDDING TAPE IS ATTACHED TO PANEL 'P' ITS THICKNESS MUST STILL BE ADDED TO 'Q'.)
2. SELECT FASTENER WITH 'L' DIMENSION NEAREST TO REQUIRED LENGTH.
3. IF REQUIRED LENGTH IS LESS THAN 'L' DIMENSION OF FASTENER SELECTED ADD WASHERS UNDER SPRING TO EQUAL THE DIFFERENCE.

## METHOD OF CALLING UP FASTENER.

A5 (ROUND HEAD TYPE) / 20 (LENGTH 'L' IN 1/100") OR F3 (COUNTERSUNK HEAD TYPE) / 45 (LENGTH 'L' IN 1/100")

| ISSUE Nº | DATE |
|---|---|
| 1 | JULY '56 |

COMPILED: T. EVANS.
TRACED: D.P.
APPROVED: T. Young.

DRAWING OFFICE DATA SHEET Nº 1/43B

# 'DZUS' FASTENERS (ROUND HEAD AND COUNTERSUNK HEAD TYPES)

THE DE HAVILLAND AIRCRAFT COMPANY LTD., HATFIELD, HERTS.

# D.H.S. 553

SHEET Nº 1 | Nº OF SHTS. 2

## IMPORTANT NOTE.

ALL DRAWINGS BEAR THE FOLLOWING PRINTED NOTE AT TOP OF SHEET "REMOVE ALL SHARP EDGES". THE AMOUNT OF MATERIAL TO BE REMOVED ON EDGES OF HOLES AND PLATES IS NOT SPECIFIED, BUT SUCH AN OPERATION IS OF LONG STANDING IN THIS COMPANY AND THROUGHOUT THE AIRCRAFT INDUSTRY, AND THE AMOUNT CAN BE CONSIDERED AS GOVERNED BY GOOD SHOP PRACTICE.

THERE ARE, HOWEVER, PARTS OF PRIMARY STRUCTURE SUCH AS PRESSURE CABIN SKINS & APERTURES, SPAR END PLATES, TENSION MEMBERS LIABLE TO FATIGUE & PLACES WHERE CRACKS, RADIATING FROM HOLES OR OTHER STRESS CONCENTRATIONS, COULD CAUSE CATASTROPHIC FAILURE. IN SUCH CASES IT IS DESIRED TO GIVE AN INDICATION OF THE AMOUNT OF MATERIAL REMOVED & THAT IS ONE OF THE REASONS FOR THE ISSUE OF THIS (D.H.S. 553) INSTRUCTION. OTHER REASONS ARE TO DRAW ATTENTION TO THE METHOD OF DE-BURRING THE EDGES OF HOLES OR INSIDE FACES OF LAMINATED PLATES, ALSO THE NECESSITY OF CLAMPING SUCH LAMINATED ASSEMBLIES WHEN DRILLING AND REAMING.

THE NECESSITY OR OTHERWISE OF DECIDING WHETHER D.H.S. 553 IS TO BE CALLED FOR IS THE RESPONSIBILITY OF THE DESIGNER I/C OF THE UNIT IN AGREEMENT WITH THE STRESS OFFICE.

SAMPLES SHOWING "MINIMUM ACCEPTABLE STANDARDS" OF DE-BURRING OF HOLES & PLATE EDGES, APPROVED BY DESIGN, (BOTH FOR "REMOVE ALL SHARP EDGES" & "DE-BURR TO D.H.S. 553") ARE HELD FOR REFERENCE PURPOSES BY BOTH PRODUCTION AND INSPECTION DEPARTMENTS.

## METHOD OF CALLING UP ON DRAWINGS.

WHERE THE EDGES OF HOLES ONLY ARE TO BE DE-BURRED - "DE-BURR TO DHS. 553 H"
WHERE THE EDGES OF PLATE ONLY ARE TO BE DE-BURRED - "DE-BURR TO DHS. 553 E"
WHERE THE EDGES OF HOLES & PLATES ARE TO BE DE-BURRED - "DE-BURR TO DHS. 553 H & E"

**NOTE.** ON COMPONENTS OF WHICH ONLY A PART IS TO BE DE-BURRED TO DHS. 553 SUCH PARTS MUST BE CLEARLY INDICATED e.g. db

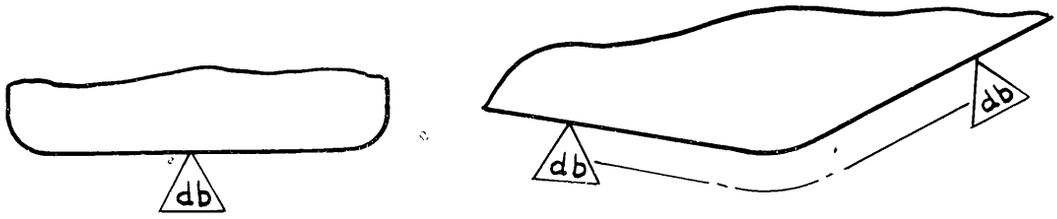


IN SUCH CASES THE FOLLOWING NOTE MUST BE ADDED, "DE-BURR TO D.H.S. 553 E WHERE SHOWN THUS":- db

## DETAIL 'H' (HOLES)

| THICKNESS OF MAT'L | INDICATION OF EXTENT OF DE-BURR |
|---|---|
| 17G. ·056 OR LESS | ·003 MAX. CHAMFER |
| 16 S.W.G. (·064)<br>14 S.W.G. (·080)<br>12 S.W.G. (·104) | ·003 TO ·005 CHAMFER. |
| 10 S.W.G. (·128)<br>8 S.W.G. (·160) | ·003 TO ·010 CHAMFER |
| 6 S.W.G. (·190)<br>3 S.W.G. (·250) | |
| 5/16" TO 11/16" INC. | ·01 TO ·03 RADIUS |
| | |

FOR EDGES OF HOLES OTHER THAN THOSE DIRECTLY UNDER BOLT HEADS.

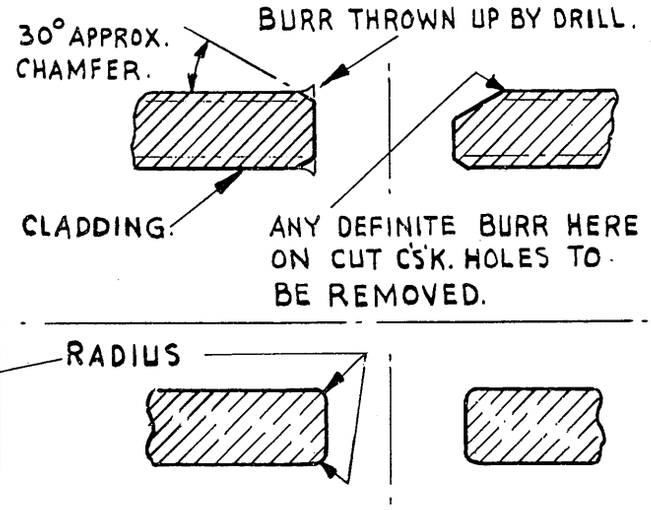


FOR SHEET THINNER THAN 17 S.W.G. A DEFINITE DIMENSION IS NOT PRACTICABLE, BUT EVERY CARE MUST BE TAKEN TO AVOID THE EFFECT OF A COUNTERSINK OR IMPORTANT BEARING AREA WILL BE LOST. THE DEPTH OF DE-BURRING SHOULD NOT EXCEED ·003.

| ISSUE Nº | DATE |
|---|---|
| 5 | S.889 |
| | |
| | |
| | |
| | |

COMPILED L. SPENCER
TRACED L. B.
APPROVED T. Young.

DE-BURRING & RADIUSING OF HOLES AND EDGES OF PLATE

DRAWING OFFICE DATA SHEET Nº 1/44A

THE DE HAVILLAND AIRCRAFT COMPANY LTD., HATFIELD, HERTS | D.H.S. 553

SHEET Nº 2 | Nº OF SHTS. 2

## RADIUSING OF EDGES OF HOLES DIRECTLY UNDER B.S.I. & D.H.S. STANDARD BOLT HEADS.

(TO ACCOMMODATE RADIUS UNDER HEAD TO SHANK)

| BOLT DIA. | BOLT RAD. | RAD. OF HOLE |
|---|---|---|
| 2 B.A. | ·010 / ·020 | ·03 |
| 1/4" TO 1" | ·015 / ·030 | ·04 |

### NOTE.

AS THE RADIUSING OF HOLES DIRECTLY UNDER BOLT HEADS IS USUALLY A MACHINING OPERATION, ALL SUCH RADII MUST BE SPECIFICALLY CALLED FOR ON DRAWINGS e.g. ·03 R OR ·04 R. (DO NOT CALL FOR D.H.S. 553)

WHERE A DRILLED HOLE THROUGH TWO OR MORE COMPONENTS HAS TO BE REAMED TO SIZE AFTER ASSEMBLY PROVISION SHOULD BE MADE BY OVER DE-BURRING THE HOLE ADEQUATELY IN THE DETAIL STATE SO THAT AFTER REAMING THE DE-BURRED EDGE WILL NOT BE CUT AWAY.

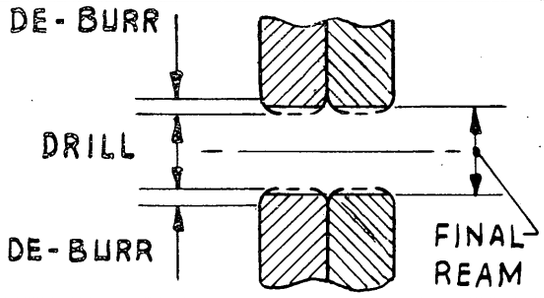


IT IS OFTEN NECESSARY TO DRILL HOLES IN A COMPONENT ALREADY PERMANENTLY ASSEMBLED e.g. BRACKETS OR OTHER PICK-UP ATTACHMENTS TO LAMINATED COMPONENTS, BULKHEADS AND THE LIKE. WHEN SUCH ADDITIONAL HOLES ARE DRILLED IT IS OBVIOUSLY IMPOSSIBLE TO DE-BURR AROUND THE HOLE AT INSIDE JOINTING FACES OF THE PERMANENTLY LAMINATED JOB.

IN SUCH CASES A SATISFACTORY ALTERNATIVE IS TO REAM EACH HOLE (WHETHER CALLED UP AS 'REAMED' OR 'DRILLED BOLT HOLES') IN THE FULLY CLAMPED UP CONDITION, BUT IT IS EMPHASISED THAT EFFICIENT CLAMPING IS ESSENTIAL TO PREVENT EITHER THE PUSHING UP OF BURRS OR THE INCLUSION OF SWARF BETWEEN JOINTING FACES.

THE OUTSIDE FACES OF THE HOLE WILL BE DE-BURRED.

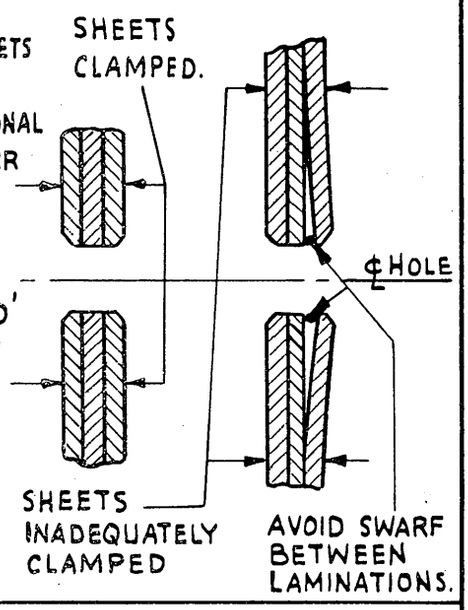


## DETAIL "E" (EDGES)

DIMENSIONS GIVEN IN 1 & 2 MUST BE USED ON THE EDGES OF ALL SHEETS WHERE D.H.S. 553E IS CALLED UP.

### 1. SHEET - 24 S.W.G. & THINNER.

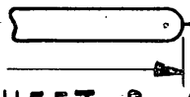

FULL RADIUS.

### 2. SHEET & COMPONENTS.

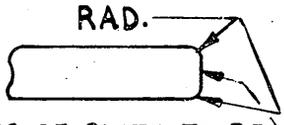


| S.W.G. | RAD. |
|---|---|
| 22G. TO 17G. | ·003 MAX. |
| 16G. TO 12G. | ·003/·005 |
| 10G. TO 3G. | ·003/·010 |
| 5/16" TO 11/16" | ·010/·030 |

EDGES OF PLATE TO BE FINISHED FREE FROM FILE, SAW & SHEAR KNIFE MARKS BEFORE RADIUSING.

### SHEETS - RIVETED.

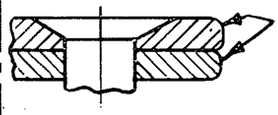

EACH SHEET WILL BE CHAMFERED/RADIUSED ON EDGES PRIOR TO RIVETING.

### SHEETS - REDUXED.

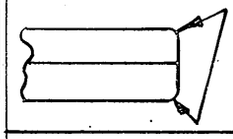

NEED BE RADIUSED ·02 - ·03 ON OUTSIDE EDGES ONLY.

### PRACTICE TO BE AVOIDED.

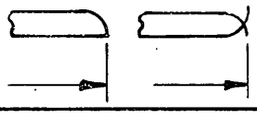

RESULTING IN LOSS OF MATERIAL.

DE-BURRING BY ROTO FINISH TO D.H.A.412 IS AN ACCEPTABLE METHOD PROVIDED THE RADII ON EDGES REQUIRED BY THIS STANDARD ARE ACHIEVED.

NOTE. REF. ONLY. SHEET COMPONENTS TO BE ROTO FINISHED SHOULD BE NO THINNER THAN 20 S.W.G. FOR LIGHT ALLOY OR 24 S.W.G. FOR STEEL & SHOULD NOT BE GREATER IN AREA THAN 6" O x 6" O UNLESS SUBSEQUENTLY THEY ARE TO BE HEAT TREATED AND FORMED THUS REMOVING ANY DISTORTION WHICH MAY RESULT.

| ISSUE Nº | DATE |
|---|---|
| 5 | 5.889 |

COMPILED L. SPENCER.
TRACED L. B.
APPROVED T. Young.

DE-BURRING & RADIUSING OF HOLES & EDGES OF PLATE

DRAWING OFFICE DATA SHEET Nº 1/44 B

## CLASSIFICATION & D.O. PROCEDURE FOR FORGINGS

The procedure outlined in the following paragraphs must be adhered to in the preparation and issue of drawings of Forgings. This supplements D.H.A.84 instructions for purchasing and fabricating medium and high strength wrought aluminium alloys and D.H.A.85. (M.20486) Supply Procedure – Steel and light Alloy Forgings.

It is the responsibility of the Assistant Designer in charge of an aircraft or unit to check that all drawings of forgings are correctly classified and the full procedure carried out.

## CLASSIFICATION OF FORGINGS

### CLASS 1

(A) One whose failure in flight, landing, take off, or ground manoeuvre might be the direct cause of:–

(1) Structural collapse
(2) Loss of control
(3) Failure of motive power
(4) Injury to any occupant
(5) Unintentional operation of, or inability to operate any services or equipment essential to the safety or operational function of the aeroplane. (For A.R.B. – to operate Essential Equipment Services).

NOTE:– If the failure would lead to danger only through a second unlikely event, such as a broken aerial mast jamming the tail unit controls, the part is not deemed to be within the definition of Class 1.

80. (B) Any other forging which is a highly stressed part and in which the maximum properties of the material are required.

### CLASS 2

One which is defined as a stressed part not covered by the terms of Class 1.

### CLASS 3

One which is defined as an unstressed or only lightly stressed part not covered by the terms of Class 1.

## DRAWING OFFICE REQUIREMENTS

### PHYSICAL TEST PIECES

Where physical tests are necessary on the forging the exact location of the test pieces must be indicated in at least two relevant views of the drawing. They will be indicated by the sign shown in (a) below, drawn approx. to scale and where more than one is required a reference number will be given to co-relate the sign in various views and on all test reports relating to the particular forging.

In all cases the letter L or T (Longitudinal or Transverse) will be given as appropriate; this indicates to the Forge Masters which of the two properties specified for the material called for, are required to be achieved on the tensile test piece.

(a)

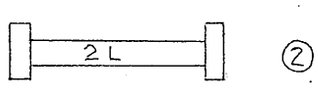


(b)

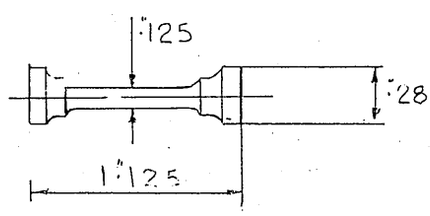


The dimensions of the smallest Standard Tensile Test Piece are given in (b) above and must be used wherever possible. In certain circumstances a flat test piece can be designed but this requires special attention and delays routine testing considerably.

### PROJECTION TEST PIECE (Steel Forgings only)

Consideration should be given to the provision of projection test pieces, forged integrally on each and every forging to provide for a nick fracture test.

This is to see that overheating has not occurred at any time during the production processes. However, the projections can only be provided where the essential grain flow of the forging is unaffected, their size may be varied to suit the application and agreement on these requirements must be reached between the Assistant Designer, the Senior Stressman and the Forge Masters.

## GRAIN FLOW

The direction of grain flow is to be shown correctly and adequately on the drawing. Approval of its direction is to be reached between the D.O., Stress Office and Forge Masters as outlined in the drawing issue procedure.

## MARKING OF PART NUMBERS

The part number of the forging is usually marked by sinking the number in the die so that it appears raised on the finished forging, but in addition to this further marks recording cast, batch and various processes, are added by the foundry. It is therefore necessary to indicate clearly on the drawing the position for all such markings, bearing in mind that a stamped marking may affect the finished part.

## NEW DRAWINGS OF FORGINGS IN CLASS 1

(For L.A. forgings requiring pre-heat treatment machining to the requirements of D.H.A.84, see additional D.O. procedure and notes on opposite page).

A drawing of the proposed forging is prepared and in the majority of cases takes one part number for both the part as forged and the finished part. Where permanently attached parts such as bushes are required on the finished part, the N.D. number will be given to the 'as forged' part.

In the case of two handed parts made from a common forging, it will be necessary to provide an N.D. number for the forging. The left and right hand parts, as machined, will also require a number which may also be N.D. if further details are assembled to them.

The material must be selected from the relevant table in Part 3 of the D.O. Handbook, and the notes appropriate to the condition in which it is to be machined added.

The drawing will indicate the required grain flow and the positions of the test pieces, decided in consultation with the Stress Office and where necessary; with the Forging Company's Representative. The drawing will not be approved for issue until it has received the signature of the Senior Stressmen concerned, in addition to the normal drawing approval procedure.

The drawing will be clearly marked up 'PRELIMINARY – FORGING TECHNIQUE NOT FINALISED' and the issue number marked A.

It will be issued through the Print Issue Dept. and distributed as laid down on the 'Issue of Drawings' instruction prepared for each aircraft project. This details the special issue accorded to forgings and requires the print slip to be clearly marked with the word 'FORGING' after the part number. (This applies to all classes of forgings).



Copies of the drawing are sent to the Buying Office and thence to the Forge Masters who, in turn prepare and submit for approval their die drawing indicating grain flow, die line, location of test pieces etc. and confirming their ability to achieve the mechanical properties required.

On receipt of this information the Buying Office forward one copy to the Section Leader responsible, and one to the Stress Office. If necessary, further letter issues of the aircraft drawing will be made until agreement is reached, whereupon the note (Preliminary) is removed, the issue raised to one and fully issued permitting purchase of the forging.

## NEW DRAWINGS OF FORGINGS IN CLASS 2.

For drawings of Class 2 forgings a similar procedure to that outlined for Class 1 will be followed as far as grain flow, die line and the ability to achieve mechanical properties etc. are concerned, but test pieces will not be called for. This is based on the assumption that the material properties are sufficiently stable to realize the strength required without resort to tensile tests.

## NEW DRAWINGS OF FORGINGS IN CLASS 3

Drawings of Class 3 forgings, after agreement on classification by the Stress Office, may be fully issued (Issue 1) and buying may proceed forthwith. The drawing will indicate approximate grain-flow for guidance to the forger and general reference.

## FORGINGS TO REPLACE STOCK MATERIAL

Where a drawing exists for a part machined from bar or plate material already in production, and it is desired to introduce a forging the procedure given above will be followed appropriate to its classification.

For Class 1 or 2 the drawing will be marked up as required and given the issue 'A' in the next adjoining column to the last number issue and when approved will take the next consecutive issue number. Production to the last number issue will continue unless specifically stopped by Suspense Note.

For Class 3 the drawing will simply take the next consecutive issue number indicating change of material.

Where special material may have been necessary previously, consideration should be given to the issue of a Suspense Note on that material.

## FORGING MACHINED FULLY HEAT TREATED

Forgings that may be machined in the solution treated and precipitated condition will follow the above procedure and must bear the note 'MACHINE IN THE SOLUTION TREATED AND PRECIPITATED CONDITION'.

Forgings, where the form, i.e. in thin sections of large area, is likely to cause excessive distortion during heat treatment must be machined in the solution treated condition and any distortion during machining corrected before precipitation, in such cases the drawing must bear the note 'MACHINE IN THE SOLUTION TREATED CONDITION, ADJUST AS REQUIRED BEFORE PRECIPITATION'.

## FORGINGS REQUIRING PRE-HEAT TREATMENT MACHINING

The mechanical properties of the higher strength light alloys are finally obtained by quenching from solution heat treatment, followed by precipitation heat treatment where appropriate.

The rapid quenching induces a stress gradient through the section which can give rise to distortion on subsequent machining and, in severe conditions, fracture depending on the extent of machining, thickness of section and the stress distribution.

It is desirable therefore, to remove a minimum and uniform amount of material from any surface after solution treatment to avoid penetrating the underlying tension zone, thereby causing distortion. The minimum amount of material to be removed will depend on the complexity of the forging and the risk of distortion during heat treatment.

82

It is desirable that the forging be machined to finished part dimensions before heat treatment, but to allow for heat treatment distortion a maximum of ·06 of surplus material may be necessary on all locating or working faces to be machined off after heat treatment.

It is essential that the correct heat treatment and machining sequences be applied and the appropriate instructions given on drawings.

Drawings must cover three stages of manufacture and allocate a part number for the component at each stage as follows :–

(1) THE BASIC FORGING. The drawing will be prepared as detailed previously and will give the note 'FORGING TO BE SUPPLIED IN THE ANNEALED CONDITION'.

(2) THE FORGING MACHINED, BEFORE HEAT TREATMENT. The drawing will cover the maximum possible metal removal before solution heat treatment as noted above, and will give the note 'MACHINE IN THE ANNEALED CONDITION LEAVING NOT MORE THAN ·06 DISTORTION ALLOWANCE WHERE NECESSARY AND SUBSEQUENTLY SOLUTION TREAT AND PRECIPITATE'.

(3) THE FORGING FINISHED MACHINED. The drawing will give the finished dimensions and the note 'MACHINE IN THE SOLUTION TREATED AND PRECIPITATED CONDITION'.

The actual form the drawing will take depends on the size or complication of the component.

For larger and complicated components, three drawings are preferred but (2) may be made N.D. on (3) by 'starring' dimensions to the relevant notes, but this should not be done where (3) becomes 'ND' itself due to the addition of further details such as bushes, etc. in the final sub-assembly.

Small forgings may be fully detailed on one drawing sheet but must give three part numbers for the three main stages related to the notes given above.

It will be the responsibility of the Methods Engineering department to determine the pre-heat treatment machining dimensions.

# NOTES ON THE USE OF HIGH STRENGTH LIGHT ALLOY EXTRUDED BARS AND SECTIONS

(MATERIALS BS. L.65 and DTD 363 ONLY.)

The following notes are to draw attention to:-

(a) Variation of strength properties with size of extrusion.
(b) Nature and extent of coarse grain banding.
(c) The need for exclusion of coarse grain.
(d) The need for strength properties and extent of coarse grain banding to be guaranteed.
(e) Test procedure to DHA 396.
(f) Drawing Office procedure for Extrusion drawings.
(g) Drawing Office procedure for Component drawings.

.....

## (a & b) STRENGTH PROPERTIES AND EXTENT OF COARSE GRAIN BANDING.

Data sheet 111/8 and III/8 B gives details in table form.

## (c) EXCLUSION OF COARSE GRAIN.

Coarse grain seriously affects the fatigue life of a finished component and its inclusion in any major structural members should be the subject of agreement between the Designer in charge and the Senior Stressman.

## (d) GUARANTEE OF STRENGTH PROPERTIES AND COARSE GRAIN BAND.

Under normal acceptance test procedure on a material batch basis certain lengths of extrusion have been found to have slightly reduced strength properties and/or excessive coarse grain banding.

On components where guaranteed properties and control of coarse grain are an essential feature of their design such a risk cannot be accepted and the test procedure to DHA 396 A and/or B will be called for.

## (e) TEST PROCEDURE TO DHA 396.

Specification DHA 396 is issued to detail our particular requirements for high strength light alloy extrusions under the terms of B.S. L100 Section 6, and controls both very large and normal sizes of extrusion, by guaranteeing the properties given on data sheet 111/8B or specifically agreed properties under

Section A. The coarse grain banding, by macro examination.
Section B. Strength properties, by test pieces taken from each end of each cut length of extrusion.

This procedure involves a considerable amount of additional machining and inspection control and it is the responsibility of the Designer in charge to call for DHA.396 only when necessary.

GENERAL NOTE. (1) Where a component is called for to be made from a given extrusion or bar size, no alternative may be used without Concession approval or drawing alteration.

(2) If sufficient test evidence is available to show that a particular extrusion is consistently above specification requirements, the Laboratory may make application to the Stress Office for the relaxation of the Test procedure to DHA 396 on any specified component. e.g. A stringer section calling for DHA.396 Section B could be relaxed as regards de Havilland testing to DHA 376 or even to BS L.100 Section 5 only as regards to the Suppliers testing.

(f) DRAWING PROCEDURE FOR EXTRUSIONS.

The drawing of the extrusion will be under a 'J' Drawing number for extrusions up to a max. size defined as one weighing 130 lbs which can be circumscribed by a 5" dia. circle and is not in itself greater than 4 square inches in area.

Sections exceeding this maximum are considered to be large and will be given a D.H. aircraft Pt.No. They are subject to an appreciable variation in mechanical strength properties throughout the cross section, and because of their size and length, from one end to the other. Such extrusions are the subject of special discussion between the Design Office and the Supplier.

J. DRAWINGS. (a) Where coarse grain banding is to be removed.

1. The section will be drawn chain dotted and fully dimensioned to show the maximum section of the finished machined part (N.B. This may be made up from a number of varying sections required on the finished machined part).

2. The length to the nearest inch, of the extruded section required to make the actual finished component. This is required for calculation of billet size and position of test piece sections.

N.B. i. This cut length must include an additional 12 in. for heat treatment test pieces.

ii. It must also include any additional length required by Production for clamping on milling or stretch forming machines.

iii. If the component is to be 'Reduxed' a further additional length of 12 in. may be required for a Redux test piece.

For small finished components, extrusions will be ordered as Random lengths 12 - 16 feet.

3. The note 'TEST PROCEDURE TO DHA 396 SECTION A', also if required, 'Section B' and where considered necessary the position of test pieces.

4. The note 'FULL SPEC. PROPERTIES, NO COARSE GRAIN INSIDE DOTTED LINE'.

J. DRAWINGS. (b) Where coarse grain banding is acceptable.

1. The section will be drawn fully.

2. When required 'TEST PROCEDURE TO DHA 396 SECTION B' also where considered necessary the position of test pieces and the length as in (a) 2 above.

D.H. AIRCRAFT PART NUMBER DRAWINGS.

Where coarse grain banding is to be controlled or not.

1 & 2. As for 1 & 2 for 'J' Drawing in (a) above.

3. Minimum properties acceptable together with the position and size of acceptance and heat treatment control test pieces.

4. The precipitation heat treatment required.

5. 'TEST PROCEDURE TO DHA 396' SECTION 'A' AND 'B'.

NOTE: 3,4 & 5 to be decided in conjunction with the Laboratory, Stress Office and Supplier.

On receipt of the preliminary letter issue of the extrusion drawing, the extruders will confirm their ability to meet our requirements and where applicable, indicate on their die drawing the size of the actual section they will extrude to produce the chain dotted section free of coarse grain.

The final drawing will then be issued ISSUE 1 and thereby give authority for buying to proceed.

(g) DRAWING PROCEDURE ON ALL COMPONENT DRAWINGS.

(1) COMPONENTS MADE FROM 'J' OR D.H. PT.NO. EXTRUSION.

The relationship between the finished machined component and the extrusion to be used must be detailed, thus controlling the exclusion of coarse grain banding where necessary.

(2) COMPONENTS MADE FROM REGULAR SECTION STOCK EXTRUSION.

The maximum bar size to be used will be called up. This size will be the maximum size given on Data sheet 111/8 against the strength properties used for the component design.

In the case where the coarse grain boundary is to be removed the minimum bar size required to achieve this will be shown superimposed and quoted on the finished component. (Note. This procedure may be adopted in certain cases without invoking test procedure to DHA 396, where considered desirable by the Designer in charge).

(3) GUARANTEED PROPERTIES.

Where required the note must be added 'TEST PROCEDURE TO DHA 396 SECTION A AND/OR B'.

(4) FINISH OF COMPONENT.

All drawings of components made from DTD 363 or L.65 will bear the following note:-

A GOOD FINISH WITHOUT, SCORES OR
OTHER MARKS IS REQUIRED ON ALL
MACHINED SURFACES & RADII.
DEBURR TO DHS. 553.

On major structural components only, the external corner radii should be increased where possible to .05 - .08 and, if not fully detailed, can be called up as DEBURR TO DHS.553/C.

The application of Spec. DHA.401 'Autoflow vapour Blasting of Light Alloy Spars and Booms' should be considered by the Designer in charge.

From :- D.O. STANDARDS.

To :- Design and Drawing Offices.

THE POSITION FOR MARKING OF PART NUMBERS.

Considerable attention is being given to the methods used in the Production Shops for part numbering components, to prevent stamping or deep etching of thin or highly stressed materials.

The majority of such markings is to be done now with a vibro-engraving tool which has been proved to give a minimum of detrimental effect to specimens subjected to a fatigue test.

To assist the Inspection Department in carrying out these D.O. requirements it has been decided that all drawing of details will show where the part number is to be marked, care being taken to position the part number so that it will be visible on the final assembly wherever possible.

This will not be necessary on very small components or assemblies, but the final decision on this point rests with the Inspection Department who are governed by other standing instructions.

The method to be employed in marking the part number will be controlled by the use of the following symbols on detail drawings.

| | | | |
|---|---|---|---|
| 1. | 1" x 1/4" WHEREVER POSSIBLE | PT. Nº / S | = STAMP OR VIBRO-ENGRAVE. |
| 2 | | PT. Nº / E | = VIBRO-ENGRAVE ONLY. |
| 3 | RAISED BOSS TO BE DRAWN 1 1/2" x 1/4" | PT. Nº CAST | = CAST ON |
| 4 | | PT. Nº STAMP | = RAISED BOSS FOR STAMPED NUMBER. |
| 5 | | PT. Nº ENGRAVE | = RAISED BOSS FOR VIBRO-ENGRAVING ONLY. |

NOTES:-

(a). Call for (1) wherever practical as it permits both forms of marking, but not on Class 1 components.

Castings are always required to be stove enamelled which tends to obliterate the light marking of the vibro-engraving pencil, it is therefore preferable to call up (1) but only if no damage will be caused by heavy stamping. In such cases call up (3) (4) or (5) as applicable.

A casting may be required to have five markings. Firstly the casting number which can be cast on a slightly raised platform. Secondly, the founders code and batch number which is to be marked on the end of the platform bearing the cast part number. Thirdly, the casting assembly number, which, together with the production batch code and the inspectors mark, will be marked on a second platform 1½ in. x ¼ in. raised on the casting for that purpose by calling up (4) or (5) as applicable. Each casting must therefore have two part number positions called up.

(b) Forgings will be treated in a similar manner to castings, but where it is not possible to raise a platform (4) or (5), a suitable position must be indicated by calling up (1) or (2) as applicable.

(c) Components made from H.T. Steels in excess of 55 tons U.T.S., such as spar joint fish plates, will continue to be marked by the acid etch process 'DH 135' (as called up on D.O. Handbook Sheet 111/7). N.B. This process is not suitable for light alloy.

(d) Fuel and oil tanks are required to be marked to DTD.1101 by paint stencil or metal label and it is necessary only to indicate the position for such marking.

(e) Unless it is specially necessary for design reasons, the position of part numbers of pipes for piped services will not be shown on drawings. They will be marked in accordance in General Instruction D.O.I. 10418 which covers also, light alloy jack cylinders which may be considered too thin to mark by normal methods.

(f) Steel tubular components are marked on a small brass label and brazed on, unless other instructions are given on the drawing. It may be necessary to call for the use of Soft Solder on a heat treated steel tube.

The marking of light alloy tubular components should be positioned away from the tube wherever possible on stressed components, preferably on an end fitting or if this is not possible, towards the end of the tube but away from any shear pin holes.

(g) Serial numbers for specially mated assemblies (e.g. split components that have to be machined together to achieve close tolerances required), must be called up on drawings in accordance with General Instructions D.O.I. 10349.

(h) All major components (e.g. Wings, Ailerons, Elevators, etc.) will bear a part number and serial number label to DHS.429/- or similar which must be called up and positioned on drawings.

(j) The drawing of any fine or delicate component may bear a note, as hitherto, that no part number marking must be done on the component.

There will be no retrospective action on this instruction unless necessary for design reasons or requested by W.Q.N. from W.I.D.

The instruction will apply to all new or modification design work.

III/1A - 1D (INC.) EXPLANATORY NOTES
III/2A SHEET - STEEL (NON STAINLESS)
III/2B SHEET - STEEL (STAINLESS) BRASS AND COPPER
III/3A SHEET - TITANIUM - TITANIUM ALLOY
III/4A SHEET - ALUMINIUM ALLOY
III/4B SHEET - ALUMINIUM ALLOY AND ALUMINIUM
III/4C PLATE - ALUMINIUM ALLOY
III/4D PLATE - ALUMINIUM ALLOY
III/4E PLATE - ALUMINIUM ALLOY
III/4F PLATE - ALUMINIUM ALLOY
III/4G SHEET - MAGNESIUM ALLOY
III/5A BAR - STEEL (NON STAINLESS)
III/5B BAR - STEEL (CASE HARDENING)
III/5C BAR - STEEL (STAINLESS)
III/6A BAR - TITANIUM - TITANIUM ALLOY
III/7A BAR AND EXTRUSION - ALUMINIUM ALLOY
III/7B BAR AND EXTRUSION - ALUMINIUM AND MAGNESIUM ALLOY
III/7C PROPERTIES OF LIGHT ALLOY RECTANGULAR BAR
III/8A BAR - BRASS AND BRONZE
III/9A TUBES - STEEL (NON STAINLESS)
III/9B TUBES - STEEL (STAINLESS)
III/11A TUBES - LIGHT ALLOY AND MAGNESIUM
III/12A TUBES - COPPER, BRASS AND TUNGUM
III/13A FORGINGS AND STAMPINGS. (NON STAINLESS STEEL)
III/13B FORGINGS AND STAMPINGS (STAINLESS STEEL)
III/14A FORGINGS AND STAMPINGS - TITANIUM AND TITANIUM ALLOY
III/15A FORGINGS AND STAMPINGS - LIGHT ALLOY
III/15B FORGINGS AND STAMPINGS - LIGHT ALLOY
III/16A CASTINGS - BRONZE AND STEEL
III/17A CLASSIFICATION AND DESIGN STRESSES
III/17B CASTINGS - LIGHT ALLOY
III/17C CASTINGS - LIGHT ALLOY
III/17D CASTINGS - MAGNESIUM ALLOY
III/20A SPRINGS
III/20B SPRINGS
III/21 NOMOGRAM FOR STRESS
III/22 NOMOGRAM FOR STIFFNESS
III/23 SPRINGS (PERMISSIBLE STRESS)
III/30 STRENGTH OF LUGS
III/31 PROPERTIES OF ROUND BARS
III/32 PROPERTIES OF CIRCULAR TUBES
III/34 ALLOWABLE SHEAR STRESS FOR TUBES IN TORSION
III/35 ALLOWABLE STRESS FOR TUBULAR STRUTS WITH PIN JOINTED ENDS (STEEL)
III/37 ALLOWABLE STRESS FOR TUBULAR STRUTS WITH PIN JOINTED ENDS (AL. ALLOY)
III/39A WEIGHT DATA
III/39B WEIGHT DATA
III/40 STRENGTH OF WELDING
III/41 STRENGTH OF RIVETS, L.A. MUSHROOM AND SNAP HEAD IN L.A.
III/41A STRENGTH OF RIVETS (STEEL AND MONEL IN STAINLESS STEEL)
III/41B STRENGTH OF RIVETS (MONEL IN TITANIUM)
III/41C STRENGTH OF L.A. RIVETS - DIMPLED SHEET
III/41D STRENGTH OF RIVETS, LIGHT ALLOY, CUT C'S'K. IN LIGHT ALLOY
III/42 STRENGTH OF CHOBERT RIVETS
III/42B STRENGTH OF RIVETS 'CHOBERT' C'S'K. HEAD STEEL IN LIGHT ALLOY
III/42C STRENGTH OF RIVETS 'CHOBERT' SNAP HEAD STEEL IN LIGHT ALLOY
III/43A USE OF NUTS
III/43B STRENGTH OF BOLTS
III/43C BOLT BEARING STRENGTHS
III/43D STRENGTH OF BOLTS - COMBINED SHEAR AND TENSION
III/43E STRENGTH OF C'S'K. HEAD H.T.S. BOLTS (CIVIL)
III/43F STRENGTH OF C'S'K. HEAD H.T.S. BOLTS (SERVICE)
III/43G STRENGTH OF LIGHT ALLOY BOLTS - D.H.S. C'S'K. HEAD

GENERAL

Section III gives approved strength data for various materials and components. Strength data from other sources such as A.P.970, handbooks of other firms, test reports, etc. MUST NOT be used in preference to the data given here except with explicit approval at Assistant Chief Stressman level or above. Unless it is otherwise stated, all strength information given here applies only to the static loading conditions of specification Ultimate and Proof requirements, and does not automatically safisfy Fatigue requirements.

NOTES APPLICABLE TO STRESSES QUOTED IN SECTION III.

TENSION.

The columns headed 'PERMISSIBLE STRESS, TENSION' may be used without qualification for direct tension. The CIVIL values ensure compliance with both Proof and Ultimate requirements on the basis $\frac{\text{A/C ultimate factor}}{\text{A/C proof factor}} = 1.5$. (Class 1 castings excepted).

Similarly, the SERVICE values ensure compliance with both Proof and Ultimate requirements on the basis $\frac{\text{A/C ultimate factor}}{\text{A/C proof factor}} = 1.33$ (Class 1 castings excepted.)

COMPRESSION.

In the case of very robust fittings where no form of instability is involved, 'BLOCK COMPRESSION' values equal to PERMISSIBLE TENSION may be used. In most cases however, the permissible compressive stress will be decided by stability considerations, and must be taken from the appropriate source of approved strength estimation.

0.1% PROOF.

This is the Tensile Proof. The Compression Proof may be taken at the same value as the Tensile unless otherwise stated in the Data Sheets. The Proof Stress should not be exceeded at Proof Load and the PERMISSIBLE STRESS TENSION values given in the Data Sheets ensure compliance with this for the usual A/C factors. In some circumstances such as Crash Cases, the PERMISSIBLE STRESS should be adjusted to account for the change or removal of the Proof Requirement.

BENDING.

It is not possible to state in any simple manner the permissible stresses for BENDING OR COMBINED BENDING AND END LOAD. The following notes are intended to give reasonable guidance only.

Compressive stability critical.

Where there is little or no possibility of stress redistribution, the Engineers Bend stress must not exceed the critical stability stress. Where there is possibility of redistribution, such as arises with the differential bow strain of stringers and spar flanges, etc., the effects of this redistribution must be investigated.

Stability not critical.

A conservative estimate of strength is usually given by limiting the tensile or compressive extreme fibre stresses, Engineers Bend Theory, to the PERMISSIBLE TENSION,

There are however, many sections and materials where the preceding estimate of strength is over-conservative since plasticity can permit ultimate stress distribution different from those given by Engineers Bend Theory. In these circumstances, and if the occasion warrants it, the estimate of ultimate strength requires FORM FACTOR investigation. The use of FORM FACTOR means that PROOF requirements are not automatically satisfied and these must be investigated on the basis that maximum stresses given by Engineers Bend Theory at PROOF do not exceed the 0.1% PROOF STRESS.

| ISSUE NO. | DATE |
|---|---|
| 1 | AUG.'55 |
| | |
| | |
| | |
| | |
| | |

COMPILED

BAN.

TRACED

APPROVED

AWT.

SHEAR

The PERMISSIBLE SHEAR STRESSES given in Section III are for BLOCK SHEAR only and may be applied to stable sections in direct shear as follows :-

a) Pins or bolts in shear; uniform distribution of stress over the cross section of the bolt may be assumed for ultimate strength estimations. If the unusual circumstance arises where a pin or bolt is bearing in thin plates of much tougher material than the bolt, reference should be made to the Stress Office for permissible bolt shears.

b) Stable sections in torsion; stresses according to simple elastic theory may be assumed for strength estimations. With many sections and materials, plasticity (TORSIONAL FORM FACTOR) will permit ultimate strengths greater than that given by the elastic theory, but in general, plastic distributions should not be used as the proof conditions are not then satisfied.

Where stability is involved, such as with thin walled tubes in torsion, flat or curved panels in shear etc. the permissible stresses must be taken from the appropriate source of approved strength estimation, e.g. Stress Office Data 03.02. etc.

| ISSUE NO. | DATE |
|---|---|
| 1 | AUG '55 |
| | |
| | |
| | |
| | |
| | |

COMPILED

BAN.

TRACED

APPROVED

WT.

BEARING.

The maximum permissible bearing stresses given in Section III have now been revised (June 1955). For a few materials, the permissible stresses have been reduced. The major changes, however, are the increases of permissible stress for the high strength Aluminium Alloys. The conservatism of the previously quoted permissible stresses allowed some latitude on the methods of estimating bearing stress. This latitude will not be available with the revised data and use must be made of the following notes.

With applied bearing stress defined as $\frac{P}{dt}$ the quoted permissible stresses may be applied directly to the following.

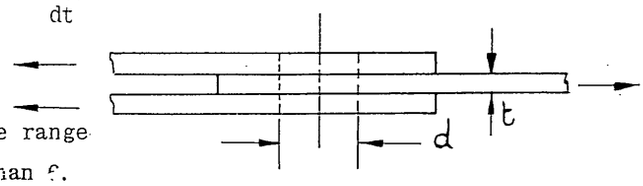


1. Bolt or pin in double shear over the range $\frac{d}{t}$ greater than 1 and less than 6.

Where the plate is supported against buckling around the edge of the hole, as for example by the clamping effect of a bolt on a flat plate, the range may be extended to $\frac{d}{t}$ less than 10

Where the plate thickness exceeds the bolt diameter, $\frac{d}{t}$ less than 1, the permissible stresses may be used if the applied bearing stress is estimated on the basis -

$$f_b = \frac{P}{d^2}$$

2. Hexagon headed bolt in single shear, with bolt clamping plates.

Range $\frac{d}{t}$ greater than 1.5 and less than 10

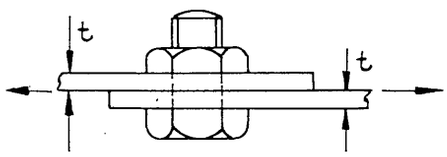


For values of $\frac{d}{t}$ less than 1.5 estimate the applied stress on the basis -

$$f_b = \frac{P}{.67d^2}$$

3. For the small values of $\frac{d}{t}$, that is with relatively thick plates, the permissible bearing stresses will be achieved only with pins or bolts of tough material. If the bolt is flexible, the load will tend to be piled at the inner face of the plate, which will make the estimation based on $f_b = \frac{P}{dt}$ very optimistic. However, this is not usually very important as the applied load is then limited by bolt shear rather than bearing.

NON STATIC LOADING.

Where there are present shock load, vibration, load reversals, or wear action the maximum permissible stress should be reduced to between 0.25 and 1.0 times that quoted for static loading. The particular reduction factor, or its equivalent, the minimum acceptable Reserve Factor, is to be decided at the level of Assistant Chief Stressman or above.

| ISSUE NO. | DATE |
|---|---|
| 1 | AUG'55 |

COMPILED

BFN.

TRACED

APPROVED

AWT.

DESIGN FACTORS FOR SINGLE PINS, MAIN PINS AND ASSOCIATED LUGS.

Where a pin or bolt is the sole load path in primary structure, the pin and its associated lug should be designed to give the factor appropriate to the category as shown below.

MAIN JOINTS - Wing-fuselage joint fittings, control surface hinges, arrestor hook fittings, A.T.O. lugs etc.

MAIN JOINTS (with wear action) - Wing fold joints, U/C retraction fittings etc.

SINGLE PINS - Covers fixed structure joints which do not fall into main joint category and which are not subject to heavy vibration, shock or load reversal, such as wing rib bracing members etc.

| Item | Minimum acceptable R.F. Main Joint | Main Joint (with wear) | Single Pins. |
|---|---|---|---|
| Pin shear (pin bending negligible) | 1.5 | 1.5 | 1.25 |
| Lug shear out | 1.5 | 1.5 | 1.25 |
| Lug tension | 1.5 | 1.5 | 1.25 |
| Lug or bush bearing from pin | 2.0 | 4.0 | 1.5 |
| Lug bearing from bush | 1.5 | 1.5 | - |

If the component is a casting, the required minimum factors are over and above the usual casting factors.

The factors given above already include an allowance for vibration, shock and reversal.

The Design factors given on this Data Sheet are to be used wherever there has been no specific decision to the contrary.

| Issue No. | Date |
|---|---|
| 1 | JULY '56 |
| | |
| | |
| | |
| | |
| | |

Compiled
BAN
Traced

Approved
A W Tomy

EXPLANATORY NOTES.

DESIGN DATA SHEET NO. III/1D

# THE DE HAVILLAND AIRCRAFT COMPANY LTD., HATFIELD, HERTS.

| Issue No. | Date |
|---|---|
| 1 | AUG '55 |
| 2 | JULY '56 |

Compiled: BAN

Traced:

Approved: [illegible]

| SPEC | MATERIAL | REMARKS | | MAX. PERMISSIBLE STRESS LBS/INS.$^2$ (TONS/INS.$^2$) TENSION CIVIL AIRCRAFT | TENSION SERVICE AIRCRAFT | .1% PROOF | SHEAR | BEARING CIVIL AIRCRAFT | BEARING SERVICE AIRCRAFT | E $x10^{-6}$ | G $x10^{-6}$ | ELONG. N % |
|---|---|---|---|---|---|---|---|---|---|---|---|---|
| S.510 | MILD STEEL | MEDIUM LOW TENSILE STEEL FOR GENERAL USE. DO NOT USE FOR PRESSINGS AND STAMPINGS. REPLACES S.3 | UNWELDED | 54,000 (24) | 47,000 (21) | 36,000 (16) | 41,500 | 99,000 | 87,000 | 30 | 11.5 | 20 |
| | | | WELDED | 45,000 (20) | 45,000 (20) | 36,000 (16) | 31,500 | 81,000 | 72,000 | 30 | 11.5 | |
| S.511 | LOW CARBON STEEL | LOW TENSILE STEEL. WELDABLE. FOR PRESSINGS AND STAMPINGS, LIGHTLY STRESSED BRACKETS, ROLLED SECTIONS ETC., ALSO FOR FIREPROOF BULKHEADS. REPLACES S.84 | UNWELDED | 40,500 (18) | 36,000 (16) | 27,000 (12) | 27,000 | 63,000 | 56,000 | 30 | 11.5 | 25 |
| | | | WELDED | 36,000 (16) | 36,000 (16) | 27,000 (12) | 24,500 | 60,000 | 54,000 | | | |
| S.514 | CARBON STEEL | DO NOT ELECTRICALLY SPOT OR SIF-BRONZE WELD. MEDIUM H.T.S. FOR GENERAL USE. WELDABLE. NORMALLY PURCHASED IN ANNEALED CONDITION AND WHEN USED IN THIS STATE DRAWINGS SHOULD QUOTE 'S.514 ANNEALED, NORMALISING AFTER BENDING AND WELDING NOT REQUIRED.' | ANNEALED CONDITION (AS RECEIVED) ALSO AFTER WELDING. | 67,000 (30) | 67,000 (30) | 56,000 (25) | 47,000 | 125,000 | 112,000 | 28 | 11 | 20 |
| | | IF THIS HIGHER GRADE IS REQUIRED, THE FINISHED PART IS TO BE BROUGHT TO THE HARDENED AND TEMPERED CONDITION. THE FOLLOWING NOTE MUST BE ADDED TO THE DRAWING 'HARDEN AND TEMPER TO THE REQUIREMENTS OF PARA. 5'. REPLACES D.T.D. 124 | HARDENED AND TEMPERED. | 101,000 (45) | 101,000 (45) | 90,000 (40) | 67,000 | 190,000 | 186,000 | 28 | 11 | 12 |
| S.516 | H.T.S. ⊕ (CARBON STEEL) | FOR REASONABLY HIGHLY STRESSED PARTS SUCH AS JOINT PLATES AND SIMILAR. UNSUITABLE FOR WELDING. REPLACES D.T.D.137 | HARDENED AND TEMPERED. | 128,000 (57) | 128,000 (57) | 112,000 (50) | 79,000 | 258,000 | 258,000 | 28.5 | 11 | 8 |
| S.517 | H.T.S. ⊕ (CARBON STEEL) | USE FOR PARTS MORE HIGHLY STRESSED THAN DTD. S.517 TO BE USED ONLY WHERE HIGHER PROPERTIES ARE REQUIRED. UNSUITABLE FOR WELDING. REPLACES D.T.D.138 | HARDENED AND TEMPERED. | 157,000 (70) | 157,000 (70) | 146,000 (65) | 101,000 | 323,000 | 323,000 | 28 | 11 | 5 |
| | | ⊕ PARTS MADE OF THIS MATERIAL MUST HAVE THE NOTES 1, 2 & 3 ON III/5C QUOTED ON THE DRAWING. | | | | | | | | | | |

SHEET - STEEL. NON-STAINLESS.

DESIGN DATA SHEET NO. III/2A

| Approved | Traced | Compiled | Issue No. | Date |
|---|---|---|---|---|
| | | BRN. | 1 | AUG.'55 |
| | | | 2 | JULY'56 |

# THE DE HAVILLAND AIRCRAFT COMPANY LTD., HATFIELD, HERTS.

SHEET - STEEL. STAINLESS, BRASS & COPPER.

DESIGN DATA SHEET NO. III/2B

| SPEC | MATERIAL | REMARKS | MAX. PERMISSIBLE STRESS LBS/INS.$^2$ (TONS/INS.$^2$) TENSION CIVIL AIRCRAFT | TENSION SERVICE AIRCRAFT | 1% PROOF | SHEAR | BEARING CIVIL AIRCRAFT | BEARING SERVICE AIRCRAFT | E $\times 10^{-6}$ | G $\times 10^{-6}$ | ELONG.$^N$ % |
|---|---|---|---|---|---|---|---|---|---|---|---|
| S.521 | LOW TENSILE STEEL | STANDARD SHEET FOR GENERAL USE. SIMILAR TO DTD.171 FOR MEDIUM STRESSED FITTINGS, FIREPROOF BULKHEADS, PARTS FOR PRESSING AND DRAWING ETC., SUITABLE FOR EXHAUST MANIFOLDS FOR TEMPERATURES UP TO 800°C. STRENGTH NOT AFFECTED BY WELDING. REPLACES D.T.D.571 (IN PART) SUITABLE FOR WELDING | 45,000 (20) | 39,500 (17.5) | 29,000 (13) | 36,000 | 65,000 | 58,000 | 28 | 11 | 30 |
| S.523 | HEAT RESISTING STEEL | SUITABLE FOR VERY HIGH TEMPERATURES AND IS USED FOR EXHAUST MANIFOLDS FOR TEMPERATURES ABOVE 800°C. STRENGTH IS NOT AFFECTED BY WELDING. REPLACES D.T.D.493 SUITABLE FOR WELDING | 45,000 (20) | 38,000 (17) | 29,000 (13) | 31,500 | 65,000 | 58,000 | 28 | 11 | 30 |
| | | DROP HAMMER PRESSINGS AND SPINNINGS MADE IN THE ABOVE MATERIALS WILL HAVE THE FOLLOWING NOTE ADDED TO THE DRAWING 'HEAT TREAT 950°C - 1050°C FOR 20 MINUTES AFTER FORMING.' | | | | | | | | | |
| S.520 | H. T. S. | FOR HIGHLY STRESSED PARTS FOR USE WHERE STAINLESS OR LOW MAGNETIC PROPERTIES ARE ESSENTIAL (MUST NOT BE HEAT TREATED). REPLACES D.T.D.166 | 117,000 (52) | 117,000 (52) | 90,000 (40) | 81,000 | 202,000 | 179,000 | 28.5 | 11 | 15 |
| | | | | | | | | | | | |
| B. S. 265 | BRASS | HALF HARD COLD ROLLED SHEET AND STRIP FOR GENERAL USE BUT UNSUITABLE FOR SPINNING, BRAZING OR SILVER-SOLDERING. | 37,000 (16.5) | 32,500 (14.5) | 24,700 (11) | 24,700 | 56,000 | 49,000 | 11.5 | 4.5 | 15 |
| B. S. 267 | BRASS | SOFT FOR GENERAL USE, COLD ROLLED SHEET AND STRIP SUITABLE FOR SPINNING. CAN BE BRAZED OR SILVER-SOLDERED. | 40,000 (18) | | | | | | | | 50 |
| | | | | | | | | | | | |
| B. S. 899 | COPPER | HALF HARD FOR GENERAL USE. | 24,700 (11) | 22,400 (10) | 16,800 (7.5) | 15,700 | 38,000 | 33,500 | 12 | 4.5 | |
| | | | | | | | | | | | |

| Issue No. | Date |
|---|---|
| 1 | AUG '55 |
| 2 [illegible] | JULY '56 |

Compiled BAN.

Traced

Approved [illegible]

THE DE HAVILLAND AIRCRAFT COMPANY LTD., HATFIELD, HERTS.

| SPEC | MATERIAL | REMARKS | MAX. PERMISSIBLE STRESS LBS/INS.$^2$ (TONS/INS.$^2$) TENSION CIVIL AIRCRAFT | TENSION SERVICE AIRCRAFT | .1% PROOF | SHEAR | BEARING CIVIL AIRCRAFT | BEARING SERVICE AIRCRAFT | E $x10^{-6}$ | G $x10^{-6}$ | ELONG. N % |
|---|---|---|---|---|---|---|---|---|---|---|---|
| DHA. 67 | TITANIUM (COMMLY. PURE) | AVAILABLE AS SHEET AND STRIP FOR GENERAL USE. SUITABLE FOR FIREWALLS AND OTHER DETAILS IN THE FIREZONE OF THE ENGINE BAY ALSO GUN BLAST TUBES AND ALL MEDIUM AND LOW STRESSED PARTS WHERE TITANIUM IS TO BE SUBSTITUTED FOR STEEL - WELDABLE. (CORRESPONDS TO REM-CRU A70 & Ti 75A.) | 81,000 (36) | 76,000 (34) | 57,000 (25.5) | 52,000 | 123,000 | 123,000 | 15.5 | 6.5 | 18 |
| DHA. 69 | 8% Mn. TITANIUM ALLOY | AVAILABLE AS SHEET AND STRIP. ONLY TO BE USED WHERE STRENGTH REQUIREMENTS PRECLUDE THE USE OF COMMERCIALLY PURE MATERIAL - NOT WELDABLE. (CORRESPONDS TO REM-CRU C 110M.) | 120,000 (53.5) | 120,000 (53.5) | .2% PROOF 110,000 (49) | 76,000 | 179,000 | 179,000 | 15.5 | 6.5 | 10 |
| | 5% AL. 2½% Sn. TITANIUM ALLOY | AVAILABLE AS SHEET AND STRIP. FOR USE WHERE MAXIMUM STRENGTH IS REQUIRED IN THE TEMPERATURE RANGE 370° - 600° C - DIFFICULT AND COSTLY TO WORK. NOT TO BE USED WITHOUT PRIOR CONSULTATION - WELDABLE. (CORRESPONDS TO REM-CRU A110 AT) | 120,000 (53.5) | 120,000 (53.5) | .2% PROOF 110,000 (49) | 76,000 | 179,000 | 179,000 | 15.5 | 6.5 | 18 |
| DHA. 70 | TITANIUM (COMMly. PURE) | AVAILABLE AS SHEET OR STRIP FOR GENERAL USE. MORE EASILY FORMED THAN DHA.67. WELDABLE. THIS MATERIAL IS OF BRITISH ORIGIN AND WHERE STRENGTH PROPERTIES ARE ADEQUATE IT WILL BE USED IN PREFERENCE TO THE SPECS. LISTED ABOVE. | 56,000 (25) | 54,000 (24) | 40,000 (18) | 36,000 | 83,000 | 83,000 | | | 20 |
| | | SHEAR AND BEARING FIGURES ARE PROVISIONAL. | | | | | | | | | |

NOTES.

DETAILS MADE FROM FORMED SHEET OR STRIP MUST BEAR THE FOLLOWING NOTES 'STRESS RELIEVE HEAT TREATMENT FOR .....MINUTES AFTER FORMING' (THE TIME DEPENDS UPON THE GAUGE - UP TO AND INCLUDING 20 SWG - 10 MINUTES, 19 SWG TO 14 SWG. 10 TO 15 MINUTES - ABOVE 14 SWG TO BE DECIDED IN CONSULTATION WITH MR. CROWE) 'DESCALE AND PICKLE AFTER HEAT TREATMENT. TO DHA. 422, 424, & 423 RESPECTIVELY'.

SHEET - TITANIUM. TITANIUM ALLOY.

DESIGN DATA III/3A
SHEET NO.

| ISSUE NO. | DATE | COMPILED | TRACED | APPROVED |
|---|---|---|---|---|
| 1 | AUG. '55 | BHN | | |

THE DE HAVILLAND AIRCRAFT COMPANY LTD., HATFIELD, HERTS.

SHEET - ALUMINIUM ALLOY.

| SPEC | MATERIAL | REMARKS | | MAX. PERMISSIBLE STRESS LBS/INS.$^2$ (TONS/INS.$^2$) TENSION CIVIL AIRCRAFT | TENSION SERVICE AIRCRAFT | .1% PROOF | SHEAR | BEARING CIVIL AIRCRAFT | BEARING SERVICE AIRCRAFT | E $x10^{-6}$ | G $x10^{-6}$ | ELONG. N % |
|---|---|---|---|---|---|---|---|---|---|---|---|---|
| L.71 | HIGH TENSILE ALUMINIUM ALLOY. | NON-CLAD SHEET FOR USE WHEN THICK GAUGE PLATES ARE REQUIRED - SAY 8 SWG. AND THICKER FOR PROTOTYPE CONTROL LEVERS, PULLEYS, SPROCKETS, JOINT STRAPS ETC. USE DTD.5020 FOR THICKNESS GREATER THAN ¼". (TO BE ANODISED.) REPLACES DTD.646. | | 63,000 (28) | 63,000 (28) | 52,000 (23) | 37,000 | 119,000 | 110,000 | 10.5 | 4 | 8 |
| L.72 | ALCLAD SOLUTION TREATED. | GENERAL PURPOSE LIGHT ALLOY SHEET FOR BENT UP FITTINGS SHEETING ROLLED OR BENT UP SECTIONS. REPLACEMENT FOR L.3, L.38, DTD.390 & 610. | | 52,000 (23) | 45,000 (20) | 33,500 (15) | 32,500 | 87,000 | 78,000 | 10 | 3.9 | 15 |
| | | | OVER ¼" THICK | 50,000 (22.4) | 42,000 (18.6) | 31,500 (14) | 30,000 | 83,000 | 74,000 | 10 | 3.9 | 10 |
| DTD. 710 | ALCLAD SOLUTION TREATED. | SAME USE AS L.72 BUT HAS CLOSER TOLERANCES FOR WEIGHT AND GAUGE AND SHOULD BE USED WHERE AREA JUSTIFIES THE RESULTANT SAVING IN WEIGHT. | > 12 S.W.G. | 52,000 (23) | 45,000 (20) | 33,500 (15) | 32,500 | 87,000 | 78,000 | 10 | 3.9 | 15 |
| | | | 12-24 S.W.G. | 52,000 (23) | 45,000 (20) | 33,500 (15) | 32,500 | 87,000 | 78,000 | 10 | 3.9 | - |
| L.73 | ALCLAD SOL. TRTD. & ARTIFly. AGED | SAME COMPOSITION AS L.72 BUT ARTIFICIALLY AGED. TO BE USED ONLY WHERE HIGH VALUE PROOF STRESS IS REQUIRED. USE FOR SKINNING ROLLED OR BENT UP SECTIONS. REPLACES DTD. 546 | | 60,000 (27) | 60,000 (27) | 47,000 (21) | 35,000 | 114,000 | 105,000 | 10 | 3.9 | 8 |
| DTD. 746. | ALCLAD SOLUTION TREATED AND ARTIFICIALLY AGED. | SAME USE AS L.73 BUT HAS CLOSER TOLERANCES FOR WEIGHT AND GAUGE AND SHOULD BE USED WHERE AREA JUSTIFIES THE RESULTANT SAVING IN WEIGHT. SEE DTD.706 FOR SPECIAL FLATNESS SHEETS. | > 12 S.W.G. | 63,000 (28) | 63,000 (28) | 52,000 (23) | 36,000 | 114,000 | 102,000 | 10 | 3.9 | 8 |
| | | | 12-16 SWG. INC. | 63,000 (28) | 63,000 (28) | 52,000 (23) | 36,000 | 114,000 | 102,000 | | | |
| | | | 17-19 SWG. INC. | 62,000 (27.5) | 62,000 (27.5) | 49,000 (22) | 35,000 | 110,000 | 96,000 | | | |
| | | | 20-24 SWG. INC. | 60,000 (27) | 60,000 (27) | 47,000 (21) | 35,000 | 103,000 | 92,000 | | | |
| DTD. 687 | ALCLAD SOLUTION TREATED AND ARTIFICIALLY AGED. | USE ONLY WHERE HIGHER VALUES ARE REQUIRED. WHERE AREA JUSTIFIES THE USE OF CLOSE TOLERANCE SHEET WITH THE RESULTANT SAVING IN WEIGHT, DRAWINGS WILL CALL UP 'ALCLAD SHEET DTD.687 TO DHA.66'. NOT TO BE BENT OR DIMPLED IN THE FULLY HEAT TREATED CONDITION. SEE DATA SHEET NO. 1/26B. | 20 S.W.G. & THICKER | 72,000 (32) | 72,000 (32) | 60,000 (27) | 40,000 | 137,000 | 134,000 | 10 | 3.9 | 8 |
| | | | < 20 S.W.G. | 67,000 (30) | 67,000 (30) | 58,000 (26) | 38,000 | 132,000 | 130,000 | | | |

NOTE ALL ALUMINIUM CLAD ALUMINIUM ALLOYS LISTED ABOVE CAN BE ELECTRICALLY SPOT WELDED. IT SHOULD BE NOTED THAT GAUGES THINNER THAN 24 S.W.G. DO NOT WELD SATISFACTORILY TOGETHER.

DESIGN DATA SHEET NO. III/4A

| ISSUE NO. | DATE | COMPILED | TRACED | APPROVED |
|---|---|---|---|---|
| 3 | July'56 | | | |
| 2 | Aug.'55 | | | |

THE DE HAVILLAND AIRCRAFT COMPANY LTD., HATFIELD, HERTS.

SHEET - ALUMINIUM ALLOY & ALUMINIUM

| SPEC | MATERIAL | REMARKS | | MAX. PERMISSIBLE STRESS LBS/INS.$^2$ (TONS/INS.$^2$) TENSION CIVIL AIRCRAFT | TENSION SERVICE AIRCRAFT | .1% PROOF | SHEAR | BEARING CIVIL AIRCRAFT | BEARING SERVICE AIRCRAFT | E $x10^{-6}$ | G $x10^{-6}$ | ELONG. N % |
|---|---|---|---|---|---|---|---|---|---|---|---|---|
| DHA. 80 | ALCLAD SOLUTION TREATED | CLOSE TOLERANCE CLAD SHEET OF 24.S. COMPOSITION NOT GREATER THAN 3 S.W.G. THICK. A SINGLE HEAT TREATED MATERIAL PREFERRED WHERE FATIGUE NOT STATIC STRENGTH IS THE CRITERION. | | 57,000 (25.5) | 50,500 (22.6) | 38,000 (17) | 34,000 | | | | | 12 |
| L. 59 † | ALUMINIUM MANGANESE ALLOY (3/4 HARD) | FOR FUEL TANKS, FAIRINGS ETC., SUITABLE FOR BRAZING (DHA. 392) CAN BE WELDED TO L. 33 CASTINGS, L. 34 BAR & L. 67 TUBE. SEE DATA SHEET III/II FOR WELDING TO L. 56 TUBE REPLACES DTD. 213. | UNWELDED | 22,500 (11) | 22,500 (11) | 18,000 (8) | 14,600 | 47,000 | 36,000 | 7.5 | 2.9 | 5 |
| | | | WELDED | 10,100 (4.5) | 9,000 (4) | 6,700 (3) | 6,700 | 15,200 | 13,400 | | | |
| L. 61 † | ALUMINIUM MANGANESE ALLOY (ANNEALED) | ANNEALED L. 59. TO BE CALLED UP WHERE DEEP DRAWING OF THE DETAIL IS NECESSARY. (THE SHOPS ARE NOT PERMITTED TO ANNEAL L. 59 WITHOUT WRITTEN AUTHORITY) | UNWELDED | 13,500 (6) | 13,500 (6) | 9,000 (4) | 9,000 | 20,000 | 18,000 | | | 30 |
| | | | WELDED | 10,100 (4.5) | 9,000 (4) | 6,700 (3) | 6,700 | 15,200 | 13,400 | | | |
| DTD. 606 | ALUM.$^n$ ALLOY HALF HARD | STRONGER ALTERNATIVE TO L. 59 FOR FAIRINGS ETC. NOT SUITABLE FOR WELDING. | | 33,500 (15) | 33,500 (15) | 27,000 (12) | 19,000 | 65,000 | 60,000 | | | 5 |
| DTD. 634 | ALUM.$^n$ ALLOY FULLY ANNEALED | SOFTENED VERSION OF D. T. D. 606. SUITABLE FOR DEEP DRAWING OR SERVERELY DEFORMED PRESSINGS. NOT SUITABLE FOR WELDING. | | 15,100 (6.75) | 13,500 (6) | 10,100 (4.5) | 9,000 | 28,000 | 26,000 | 7.5 | 2.9 | 18 |
| | | | | | | | | | | | | |
| L. 16 | HALF HARD ALUMINIUM SHEET | FOR USE AS SHEET, PACKING PLATES, BENT UP FITTINGS AND SIMILAR. WELDABLE, L. 59 WOULD NORMALLY BE USED INSTEAD OF THIS SPECIFICATION. | UNWELDED | 15,700 (7) | 15,700 (7) | 13,000 (5.8) | 9,000 | 29,000 | 26,000 | 9 | 3.4 | |
| | | | WELDED | 5,600 (2.5) | 4,500 (2) | 3,400 (1.5) | 4,500 | 7,400 | 6,700 | | | |
| | | † ONE PIECE OF L. 59 OR L. 61 MAY BE SPOT WELDED TO ANY OTHER SUITABLE ALLOY BUT NOT TO THEMSELVES, EXCEPT ON UNSTRESSED PARTS AT THE DISCRETION OF THE DESIGNER IN CHARGE. | | | | | | | | | | |

DESIGN DATA SHEET NO. III/4B

| ISSUE NO. | DATE |
|---|---|
| 1 | Aug.'55 |
| 2 | July'56 |

COMPILED

TRACED

APPROVED

PLATE - ALUMINIUM ALLOY

DESIGN DATA SHEET NO. III/4C

| SPEC | MATERIAL | REMARKS | | MAX. PERMISSIBLE STRESS LBS/INS.$^2$ (TONS/INS.$^2$) TENSION CIVIL AIRCRAFT | TENSION SERVICE AIRCRAFT | 1% PROOF | SHEAR | BEARING CIVIL AIRCRAFT | BEARING SERVICE AIRCRAFT | E $\times 10^{-6}$ | G $\times 10^{-6}$ | ELONG. N % |
|---|---|---|---|---|---|---|---|---|---|---|---|---|
| DTD. 5050 | HIGH TENSILE ALUMINIUM ALLOY ZINC BEARING | NON-CLAD PLATE OF DTD.687 COMPOSITION IN THICKNESSES FROM ¼" TO 1" SUITABLE FOR MACHINING. SUPPLIED IN THE SOLUTION TREATED AND PRECIPITATED CONDITION. SEE NOTE ON DATA SHEET III/4E | Spec. Transverse Exact Size | 72,000 (32) | 72,000 (32) | 60,000 (27) | 40,000 | 137,000 | 134,000 | 10.5 | 4.1 | 6 |
| | | | Manufacturers Nom. thickness | 69,000 (31) | 69,000 (31) | 58,000 (26) | 39,000 | 132,000 | 129,000 | 10.5 | 4.1 | 6 |
| | | | Short Transverse Provisional Figures | 58,000 (26) | 58,000 (26) | 49,000 (22) | 32,500 | 112,000 | 109,000 | | | 3 |
| DHA. 380 | HIGH TENSILE ALUMINIUM ALLOY ZINC BEARING | NON-CLAD PLATE OF DTD. 5050 COMPOSITION IN THICKNESSES UP TO 3" SUITABLE FOR MACHINING. PURCHASED IN SOLUTIONED CONDITION. TO BE PRECIPITATED TO THE REQUIREMENTS OF DHA. 380 AFTER MACHINING. SEE NOTE ON DATA SHEET III/4E | SPECn. TRANSVERSE EXACT SIZE 0–1.999 | 72,000 (32) | 72,000 (32) | 60,000 (27) | 40,000 | 137,000 | 134,000 | 10.5 | 4.1 | 6 |
| | | | 2–2.5 | 72,000 (32) | 72,000 (32) | 60,000 (27) | 40,000 | 137,000 | 134,000 | 10.5 | 4.1 | 4 |
| | | | 2.5–3 | 69,000 (31) | 69,000 (31) | 56,000 (25) | 39,000 | 127,000 | 124,000 | 10.5 | 4.1 | 4 |
| DHA. 86 | HIGH TENSILE ALUMINIUM ALLOY ZINC BEARING | NON-CLAD PLATE OF DTD. 5050 COMPOSITION OVER 1" TO 3" IN THICKNESS SUITABLE FOR MACHINING. SUPPLIED IN THE SOLUTION TREATED AND PRECIPITATED CONDITION SEE NOTE ON DATA SHEET III/4E | 0–1.999 | 72,000 (32) | 72,000 (32) | 60,000 (27) | 40,000 | 137,000 | 134,000 | 10.5 | 4.1 | 6 |
| | | | 2–2.5 | 72,000 (32) | 72,000 (32) | 60,000 (27) | 40,000 | 137,000 | 134,000 | 10.5 | 4.1 | 4 |
| | | | 2.5–3 | 69,000 (31) | 69,000 (31) | 56,000 (25) | 39,000 | 127,000 | 124,000 | 10.5 | 4.1 | 4 |
| DTD. 5060 | HIGH TENSILE ALUMINIUM ALLOY ZINC BEARING | ALUMINIUM CLAD VERSION OF DTD.5050 IN THICKNESSES FROM ¼" TO 1" SUITABLE FOR MACHINING. SUPPLIED IN THE SOLUTION TREATED AND PRECIPITATED CONDITION. SEE NOTE ON DATA SHEET III/4E | Unclad Core | 72,000 (32) | 72,000 (32) | 60,000 (27) | 40,000 | 137,000 | 134,000 | 10.5 | 4.1 | 6 |
| | | | Clad Manufacturers Nominal Thickness | 69,000 (31) | 69,000 (31) | 58,000 (26) | 39,000 | 132,000 | 129,000 | 10.5 | 4.1 | 6 |
| | | | Short Transverse Provisional Figs. | 58,000 (26) | 58,000 (26) | 49,000 (22) | 32,500 | 112,000 | 109,000 | | | 3 |

THE DE HAVILLAND AIRCRAFT COMPANY LTD., HATFIELD, HERTS.

| APPROVED | TRACED | COMPILED | ISSUE NO. | DATE |
|---|---|---|---|---|
| | | | 2 | July '56 |

# PLATE - ALUMINIUM ALLOY

| SPEC | MATERIAL | REMARKS | | MAX. PERMISSIBLE STRESS LBS/INS.$^2$ (TONS/INS.$^2$) TENSION CIVIL AIRCRAFT | TENSION SERVICE AIRCRAFT | .1% PROOF | SHEAR | BEARING CIVIL AIRCRAFT | BEARING SERVICE AIRCRAFT | E $x10^{-6}$ | G $x10^{-6}$ | ELONG. % N |
|---|---|---|---|---|---|---|---|---|---|---|---|---|
| DTD. 5020 | HIGH TENSILE ALUMINIUM ALLOY COPPER BEARING | NON-CLAD PLATE OF L.71 COMPOSITION ¼" TO 1" THICK SUITABLE FOR MACHINING. SUPPLIED IN THE SOLUTION TREATED AND PRECIPITATED CONDITION. (FOR SOLUTION TREATED ONLY CONDITION SEE D.T.D.5010) SEE NOTE ON DATA SHEET III/4E | Spec. Transverse Exact Size | 63,000 (28) | 63,000 (28) | 52,000 (23) | 37,000 | 119,000 | 110,000 | 10.5 | 4.1 | 8 |
| | | | Manufacturers Nom. Thickness | 60,000 (27) | 60,000 (27) | 49,000 (22) | 36,000 | 114,000 | 105,000 | 10.5 | 4.1 | 8 |
| | | | Short Transverse Provisional Figures. | 52,000 (23) | 52,000 (23) | 43,000 (19) | 30,000 | 98,000 | 91,000 | | | 3 |
| DHA. 68 | HIGH TENSILE ALUMINIUM ALLOY COPPER BEARING | NON-CLAD PLATE OF DTD. 5010 COMPOSITION IN THICKNESSES GREATER THAN 1" UP TO 3" SUITABLE FOR MACHINING. SUPPLIED IN THE SOLUTIONISED CONDITION, TO BE PRECIPITATED AFTER MACHINING. SEE NOTE ON DATA SHEET III/4E | SPEC. TRANSVERSE EXACT SIZE ≯ 2" | 63,000 (28) | 63,000 (28) | 52,000 (23) | 37,000 | 119,000 | 110,000 | 10.5 | 4.1 | 6 |
| | | | SPEC. TRANSVERSE EXACT SIZE > 2" | 60,000 (27) | 60,000 (27) | 49,000 (22) | 34,000 | 114,000 | 105,000 | 10.5 | 4.1 | 4 |
| DHA. 87 | HIGH TENSILE ALUMINIUM ALLOY COPPER BEARING | NON-CLAD PLATE OF DTD. 5010 COMPOSITION OVER 1" TO 3" IN THICKNESS SUITABLE FOR MACHINING. SUPPLIED IN THE SOLUTION TREATED AND PRECIPITATED CONDITION. SEE NOTE ON DATA SHEET III/4E | SPEC. TRANSVERSE EXACT SIZE ≯ 2" | 63,000 (28) | 63,000 (28) | 52,000 (23) | 37,000 | 119,000 | 110,000 | 10.5 | 4.1 | 6 |
| | | | SPEC. TRANSVERSE EXACT SIZE > 2" | 60,000 (27) | 60,000 (27) | 49,000 (22) | 34,000 | 114,000 | 105,000 | 10.5 | 4.1 | 4 |
| DTD. 5040 | HIGH TENSILE ALUMINIUM ALLOY COPPER BEARING | ALUMINIUM CLAD VERSION OF DTD.5020 ¼" TO 1" THICK, SUITABLE FOR MACHINING. SUPPLIED IN THE SOLUTION TREATED AND PRECIPITATED CONDITION. (FOR SOLUTION TREATED ONLY CONDITION SEE DTD. 5030) NOTE: CLADDING IS APPROX. 2% THICKNESS PER SIDE ON THIS PLATE. SEE NOTE ON DATA SHEET III/4E | Unclad Core | 63,000 (28) | 63,000 (28) | 52,000 (23) | 37,000 | 119,000 | 110,000 | 10.5 | 4.1 | 8 |
| | | | Clad Manufacturers Nom. Thickness | 58,000 (26) | 58,000 (26) | 47,000 (21) | 34,000 | 109,000 | 101,000 | 10 | 3.9 | 8 |
| | | | Short Transverse Provisional Figures | 52,000 (23) | 52,000 (23) | 43,000 (19) | 30,000 | 98,000 | 91,000 | | | 3 |

DESIGN DATA SHEET NO. III/4D

THE DE HAVILLAND AIRCRAFT COMPANY LTD., HATFIELD, HERTS.

NOTES:

A REDUCTION OF 5% IN THE PROPERTIES AGAINST SPEC.N. TRANSVERSE EXACT SIZE IS NECESSARY WHEN USING PLATE OF MANUFACTURER'S NOMINAL THICKNESS. THIS IS TO ALLOW FOR WIDE THICKNESS TOLERANCE, ".012 – "030 UP TO 1" THICK ON THE PLATE AS ROLLED. ABOVE 1" TOLERANCES ARE ±".060.

ALL DRAWINGS OF PLATE COMPONENTS MUST BEAR THE NOTES GIVEN ON DESIGN NOTE 5, SEE SECTION II OF HANDBOOK.

REF. DHA.84 – THE FOLLOWING TABLE GIVES THE STRETCHING CAPACITY OF CURRENTLY AVAILABLE EQUIPMENT.

| MAT.L. SPEC.N. | MAX. THICKNESS (INS.) | MAX. WIDTH (INS.) | MAX. CROSS SECTIONAL AREA (INS.)$^2$ |
|---|---|---|---|
| DHA. 380 ) | 3 | 30 | 45 |
| DTD. 5050 ) | 5/8 | 60 | 20 |
| DTD. 5060 ) | 1/2 | 72 | 26.5 |
| DHA. 68 ) | 3 | 30 | 55 |
| DTD. 5010 ) | 5/8 | 60 | 24 |
| DTD. 5020 ) | | | |
| DTD. 5030-4 ) | 1/2 | 72 | 26.5 |
| DHA. 81 ) | 3 | 30 | 40 |
| DHA. 82 ) | 5/8 | 60 | – |
| | 1/2 | 72 | – |

PARTS REQUIRING STRETCHED MATERIAL OUTSIDE THESE DIMENSIONS SHOULD BE REFERRED TO THE DEVELOPMENT DEPT. BEFORE DRGS. ARE ISSUED.

RE-SOLUTION HEAT TREATMENT RESULTS IN LOSS OF PROPERTIES.

| ISSUE NO. | DATE |
|---|---|
| 2 | July'56 |

COMPILED

TRACED

APPROVED

PLATE – ALUMINIUM ALLOY

DESIGN DATA SHEET NO. III/4E

| APPROVED | TRACED | COMPILED | | | | | | ISSUE NO. | DATE |
|---|---|---|---|---|---|---|---|---|---|
| | | | | | | | | 1 | July'56 |

| SPEC | MATERIAL | REMARKS | | THICKNESS (INS.) | MAX. PERMISSIBLE STRESS LBS/INS.$^2$ (TONS/INS.$^2$) TENSION CIVIL AIRCRAFT | TENSION SERVICE AIRCRAFT | .1% PROOF | SHEAR | BEARING CIVIL AIRCRAFT | BEARING SERVICE AIRCRAFT | E $x10^{-6}$ | G $x10^{-6}$ | ELONG. % N |
|---|---|---|---|---|---|---|---|---|---|---|---|---|---|
| DHA. 81 | ALCLAD SOLUTION TREATED | ALUMINIUM CLAD PLATE OF 24 S COMPOSITION IN THICKNESSES ¼" TO 3" SUITABLE FOR MACHINING. SUPPLIED IN THE SOLUTION TREATED, NATURALLY AGED & STRETCHED CONDITION (SEE NOTE ON III/4E) | Spec. Transverse Exact Size | 0.25 – 0.499 | 57,000 (25.5) | 50,500 (22.6) | 38,000 (17) | 34,750 | 117,000 | 92,000 | | | 11 |
| | | | | 0.500–1.000 | 54,600 (24.4) | 48,500 (21.6) | 36,500 (16.3) | 33,400 | 112,000 | 88,000 | | | 8 |
| | | | | 1.001–1.500 | 54,600 (24.4) | 48,500 (21.6) | 36,500 (16.3) | 32,500 | 112,000 | 88,000 | | | 7 |
| | | | | 1.501–2.000 | 54,600 (24.4) | 48,500 (21.6) | 36,500 (16.3) | 32,500 | 112,000 | 88,000 | | | 6 |
| | | | | 2.001–3.000 | 53,800 (24) | 48,500 (21.6) | 36,500 (16.3) | 30,600 | 110,000 | 88,000 | | | 4 |
| DHA. 82 | ALUMINIUM ALLOY SOLUTION TREATED | NON-CLAD PLATE OF 24 S COMPOSITION SUITABLE FOR MACHINING, IN THICKNESSES ¼" TO 3" SUPPLIED IN THE SOLUTION TREATED NATURALLY AGED AND STRETCHED CONDITION (SEE NOTE ON III/4E) | Spec. Transverse Exact Size | 0.250–0.499 | 57,000 (25.5) | 50,500 (22.6) | 38,000 (17) | 35,700 | 117,000 | 92,000 | | | 12 |
| | | | | 0.500–1.000 | 57,000 (25.5) | 50,500 (22.6) | 38,000 (17) | 34,700 | 117,000 | 92,000 | | | 8 |
| | | | | 1.001–1.500 | 57,000 (25.5) | 50,500 (22.6) | 38,000 (17) | 33,800 | 117,000 | 92,000 | | | 7 |
| | | | | 1.501–2.000 | 57,000 (25.5) | 50,500 (22.6) | 38,000 (17) | 33,800 | 117,000 | 92,000 | | | 6 |
| | | | | 2.001–3.000 | 56,000 (25) | 50,500 (22.6) | 38,000 (17) | 31,900 | 115,000 | 92,000 | | | 4 |

PLATE – ALUMINIUM ALLOY

DESIGN DATA III/4F
SHEET NO.

THE DE HAVILLAND AIRCRAFT COMPANY LTD., HATFIELD, HERTS.

| ISSUE NO. | DATE | COMPILED | TRACED | APPROVED |
|---|---|---|---|---|
| 1 | July'56 | | | |

THE DE HAVILLAND AIRCRAFT COMPANY LTD. HATFIELD, HERTS.

SHEET - MAGNESIUM ALLOY.

| SPEC | MATERIAL | REMARKS | | MAX. PERMISSIBLE STRESS LBS/INS.$^2$ (TONS/INS.$^2$) TENSION CIVIL AIRCRAFT | TENSION SERVICE AIRCRAFT | .1% PROOF | SHEAR | BEARING CIVIL AIRCRAFT | BEARING SERVICE AIRCRAFT | E $x10^{-6}$ | G $x10^{-6}$ | ELONG. N % |
|---|---|---|---|---|---|---|---|---|---|---|---|---|
| DTD. 118 | MAGNESIUM ALLOY | 'ELECTRON' SHEET SUITABLE FOR BENDING TO SHAPES i.e. CHANNELS, ANGLES ETC. CANNOT BE WELDED TO D.T.D.348 TUBE. CAN BE WELDED TO CASTINGS D.T.D. 140 AND SELF | BEFORE WELDING | 12,300 (5.5) | 10,100 (4.5) | 7,800 (3.5) | 6,700 | 18,000 | 18,000 | 6 | 2.3 | 7 |
| DTD. 742 | MAGNESIUM ALLOY (HALF HARD) | SUITABLE FOR ARGON-ARC WELDING. WILL WELD TO DTD.348 TUBE AND SELF | BEFORE WELDING | 33,600 (15) | 29,800 (13.3) | 22,400 (10) | 21,400 | 50,500 | 44,800 | | | 8 |
| | | | AFTER WELDING | 23,500 (10.5) | 20,800 (9.3) | 15,700 (17) | 16,600 | 35,300 | 31,400 | | | |
| DTD. 259 | MAGNESIUM ALLOY (EXTRUDED) | RETAINED FOR REFERENCE ONLY USE DTD.742 FOR NEW DESIGN | BEFORE WELDING | 31,500 (14) | 27,000 (12) | 20,000 (9) | 18,000 | 39,000 | 39,000 | | | 5 |

DESIGN DATA III/4G
SHEET NO.

| APPROVED | TRACED | COMPILED | ISSUE NO. | DATE |
|---|---|---|---|---|
| AJT | | BAN | 9 | Aug. '55 |
| | | | 10 | July '56 |

THE DE HAVILLAND AIRCRAFT COMPANY LTD., HATFIELD, HERTS.

BAR - STEEL, NON-STAINLESS.

DESIGN DATA III/5A
SHEET NO.

| SPEC | MATERIAL | REMARKS | | MAX. PERMISSIBLE STRESS LBS/INS.$^2$ (TONS/INS.$^2$) TENSION CIVIL AIRCRAFT | TENSION SERVICE AIRCRAFT | .1% PROOF | SHEAR | BEARING CIVIL AIRCRAFT | BEARING SERVICE AIRCRAFT | E $x10^{-6}$ | G $x10^{-6}$ | ELONG. % N |
|---|---|---|---|---|---|---|---|---|---|---|---|---|
| S.93 | MILD STEEL | FOR GENERAL USE UP TO 6" DIAMETER UNSUITABLE FOR WELDING. REPLACES S.6 | | 67,000 (30) | 60,000 (27) | 45,000 (20) | 54,000 | 121,000 | 107,000 | 28.5 | 11.5 | 20 |
| S.92 | MILD STEEL | FOR MEDIUM STRESSED COMPONENTS. GAS OR SIF-BRONZE WELDED. REPLACES S.21 & DTD.126 | UNWELDED | 90,000 (40) | 90,000 (40) | 70,000 (31) | 58,000 | 157,000 | 139,000 | 28 | 11.5 | 20 |
| | | | WELDED | 63,000 (28) | 55,000 (24.5) | 41,000 (18.5) | 45,000 | 94,000 | 83,000 | 30 | 12 | |
| S.96 | H.T.S. | FOR STRESSED PARTS SUCH AS JOINT FITTINGS, SPECIAL BOLTS AND PINS ETC. UNSUITABLE FOR WELDING. ALL DRAWINGS CALLING FOR THIS MATERIAL MUST HAVE THE NOTE 'CRACK TEST TO DHA.324' & CLASS 1 COMPONENTS WILL CALL FOR THE ADDITIONAL * NOTES ON SHEET III/5C | | 123,000 (55) | 123,000 (55) | 96,000 (43) | 81,000 | 217,000 | 193,000 | 28.5 | 11.5 | 18 |
| S.97 | H.T.S. * | USE FOR SIMILAR PARTS AS S.96 BUT FOR MORE HIGHLY STRESSED REQUIREMENTS. UNSUITABLE FOR WELDING REPLACES S.65 | | 146,000 (65) | 146,000 (65) | 121,000 (54) | 90,000 | 269,000 | 240,000 | 29 | 12 | UP TO 4" 16 / OVER 4" 14 |
| S.98 | H.T.S. * | FOR HIGHLY STRESSED PARTS SUCH AS WING ATTACHMENT PINS SPAR END PLUGS, SPECIAL BOLTS ETC. REPLACES DTD.473. | | 168,000 (75) | 168,000 (75) | 146,000 (65) | 108,000 | 320,000 | 291,000 | 29 | 11.5 | UP TO 4" 14 / OVER 4" 12 |
| S.106 | NITRIDING STEEL * | SPECIAL STEEL FOR NITROGEN CASE HARDENING, LESS LIKELY TO DISTORT THAN CASE HARDENED PARTS. USE FOR NEEDLE RACE HOUSINGS AND SIMILAR. NOTE ON DRG.-(1) 'DEPTH OF NITRIDING TO BE ".012 MIN. 800° VPN/HD/5'. ⊙ (2) 'NOT MORE THAN ".002 OF CASE INCLUDING GROWTH ALLOWANCE TO BE REMOVED WHEN FINE GRINDING' (IF HARDNESS ONLY, NOT STRENGTH IS REQUIRED, TEST PIECES TO DHA.378 NOT REQUIRED)' REPLACES DTD.306. | | 134,000 (60) | 134,000 (60) | 101,000 (45) | 90,000 | 226,000 | 202,000 | 27 | 10.5 | 17 |
| | | | | ⊙ WHERE WALL THICKNESS IS ".1 OR LESS, DEPTH OF CASE TO BE ".008 MIN. - ".012 MAX. 800° VPN/HD/5. | | | | | | | | |
| S.1 | MILD STEEL | RETAINED FOR REF. ONLY UNSUITABLE FOR WELDING | UP TO 3/4" DIA. | 78,000 (35) | 78,000 (35) | 60,000 (27) | 56,000 | 137,000 | 121,000 | 28.5 | 11.5 | 15 |
| | | | 3/4" TO 1 1/8" DIA. | 72,000 (31.5) | 63,000 (28) | 47,000 (21) | 50,000 | 105,000 | 94,000 | | | |
| | | | GREATER THAN 1 1/8" DIAMETER | 57,000 (25.5) | 49,000 (22) | 38,000 (17) | 40,000 | | 76,000 | | | |
| | | * NOTES ON SHEET III/5C MUST BE ADDED TO DRAWING | | | | | | | | | | |

| ISSUE NO. | DATE | COMPILED | TRACED | APPROVED |
|---|---|---|---|---|
| 5 | AUG '55 | | | |

THE DE HAVILLAND AIRCRAFT COMPANY LTD., HATFIELD, HERTS.

BAR - STEEL, CASE HARDENING.

| SPEC | MATERIAL | REMARKS | | MAX. PERMISSIBLE STRESS LBS/INS.$^2$ (TONS/INS.$^2$) TENSION CIVIL AIRCRAFT | TENSION SERVICE AIRCRAFT | .1% PROOF | SHEAR | BEARING CIVIL AIRCRAFT | BEARING SERVICE AIRCRAFT | E $x10^{-6}$ | G $x10^{-6}$ | ELONG. % N |
|---|---|---|---|---|---|---|---|---|---|---|---|---|
| S. 14 | CASE HARDENING STEEL | FOR GENERAL USE WHERE LOW STRESSED PARTS ARE SUBJECTED TO EXCESSIVE WEAR, HARDER CASE THAN S. 15 (HARDNESS MIN. 800° VPN/HD/5) | NOTE. ON DRAWING DEPTH OF CASE TO BE ".015 - ".025, & QUOTE VICKERS (V.P.N.) HARDNESS NO. | 50,000 (22.5) | 45,000 (20) | 33,500 (15) | 33,500 | 83,000 | 74,000 | 29 | 12 | 20 |
| S. 15 | CASE HARDENING STEEL | FOR MEDIUM STRESSED PARTS SUBJECTED TO EXCESSIVE WEAR. (MIN. 750° VPN/HD/5.) | | 79,000 (35) | 70,000 (31) | 52,000 (23) | 56,000 | 116,000 | 103,000 | 29 | 12 | 18 |
| S. 82 * | CASE HARDENING STEEL | FOR HIGHLY STRESSED PARTS SUBJECTED TO EXCESSIVE WEAR. (MIN. 700° VPN/HD/5) | | 168,000 (75) | 150,000 (67) | 112,000 (50) | 116,000 | 251,000 | 224,000 | 25.5 | 10 | 12 |

* NOTES ON SHEET III/5C MUST BE ADDED TO DRAWING.

DESIGN DATA SHEET NO. III/5B

| Issue No. | Date |
|---|---|
| 2 | AUG. '55 |
| 3 | JULY '56 |

Compiled BFW

Traced

Approved AHT.

# THE DE HAVILLAND AIRCRAFT COMPANY LTD., HATFIELD, HERTS.

BAR – STEEL, STAINLESS

| SPEC | MATERIAL | REMARKS | MAX. PERMISSIBLE STRESS LBS/INS.$^2$ (TONS/INS.$^2$) TENSION CIVIL AIRCRAFT | TENSION SERVICE AIRCRAFT | 1% PROOF | SHEAR | BEARING CIVIL AIRCRAFT | BEARING SERVICE AIRCRAFT | E $x10^{-6}$ | G $x10^{-6}$ | ELONG. N % |
|---|---|---|---|---|---|---|---|---|---|---|---|
| S.110 | LOW TENSILE STEEL | FOR LOW STRESSED FITTINGS, STAINLESS EQUIVALENT TO S.1 & S.92. GOOD STAINLESS PROPERTIES. NON-MAGNETIC. CAN BE WELDED TO S.521 SHEET. REPLACES DTD.176. | 44,000 (19.5) | 39,000 (17.3) | 29,000 (13) | 49,000 | 65,000 | 58,000 | 28 | 11.5 | 30 |
| S.80 | H.T.S. | FOR HIGHLY STRESSED PARTS. STAINLESS EQUIVALENT TO S.96 GOOD RESISTANCE TO CORROSION. UNSUITABLE FOR WELDING. DRAWINGS WILL QUOTE 'CRACK TEST TO D.H.A.408' | 123,000 (55) | 120,000 (53.5) | 90,000 (40) | 81,000 | 208,000 | 186,000 | 28 | 11.5 | 15 |
| | | * PARTS MADE OF THESE H.T. STEELS MUST HAVE THE FOLLOWING INFORMATION ON THEIR RESPECTIVE DRAWINGS (THIS APPLIES TO FORGINGS AS WELL AS PARTS MACHINED FROM BAR) IN THE CASE OF H.T. DRAWN TUBE WHERE ANY PORTION IS MACHINED THE FOLLOWING NOTES ALSO APPLY, BUT ONLY TO THE MACHINED PORTION.<br>1. THIS FITTING IS TO HAVE A DEGREE OF FINISH ALL OVER IN ACCORDANCE WITH A STANDARD SAMPLE APPROVED BY DESIGN DEPARTMENT AND RETAINED BY INSPECTION DEPARTMENT.<br>2. ALL SHARP EDGES INCLUDING THE INSIDE AND OUTSIDE OF BOLT AND PIN HOLES ETC. TO BE BLENDED DOWN WITH A SMALL RADIUS.<br>3. CRACK TEST TO D.H.A.324 (OR D.H.A. 408 AS APPLICABLE)<br>NOTE: THE USE OF D.H.A.410 GRIT BLASTING MUST BE CONSIDERED AS A FINISH ON HIGHLY STRESSED COMPONENTS.<br>ALL UNDERCUTS MUST BE TO D.H. STANDARD i.e. EITHER DHS. 502, 503, 504 OR 505. ALL RADII ON FITTINGS MUST BE AS LARGE AS POSSIBLE. | | | | | | | | | |

DESIGN DATA: III/5C
SHEET NO.

| ISSUE NO. | DATE |
|---|---|
| 1 | Aug.'55 |
| 2 | July'56 |

COMPILED BHN

TRACED

APPROVED

THE DE HAVILLAND AIRCRAFT COMPANY LTD., HATFIELD, HERTS.

BAR - TITANIUM & TITANIUM ALLOY

| SPEC | MATERIAL | REMARKS | MAX. PERMISSIBLE STRESS LBS/INS.$^2$ (TONS/INS.$^2$) TENSION CIVIL AIRCRAFT | TENSION SERVICE AIRCRAFT | .1% PROOF | SHEAR | BEARING CIVIL AIRCRAFT | BEARING SERVICE AIRCRAFT | E $x10^{-6}$ | G $x10^{-6}$ | ELONG. N % |
|---|---|---|---|---|---|---|---|---|---|---|---|
| DHA. 90 | 4% Mn. 4% AL. TITANIUM ALLOY | FOR USE WHERE A MATERIAL HAVING HIGHER STRENGTH PROPERTIES THAN DHA.71 IS REQUIRED ESPECIALLY IN THE INTERMEDIATE TEMPERATURE RANGE – NOT WELDABLE. (CORRESPONDS TO REM-CRU C.130 AM, JESSOPS HYLITE 40 and I.C.I. 314A. | 139,000 (62) | 139,000 (62) | 128,000 (57) | 89,000 | 209,000 | 209,000 | 15.5 | 6.5 | 15 |
| | 5% AL. 2½% Sn. TITANIUM ALLOY | FOR USE WHERE MAX. STRENGTH IS REQUIRED IN THE TEMPERATURE RANGE 370° - 600°C - DIFFICULTY & COSTLY TO WORK AND NOT TO BE USED WITHOUT PRIOR CONSULTATION. WELDABLE (CORRESPONDS TO REM-CRU A.110 AT, I.C.I. 317, JESSOPS HYLITE 20). | 120,000 (53.5) | 120,000 (53.5) | .2% Proof 110,000 (49) | 76,000 | 179,000 | 179,000 | 15.5 | 6.5 | 18 |
| DHA. 71 | TITANIUM (COMMly. PURE) | FOR GENERAL USE WHERE LOW STRENGTH BAR IS UNSATISFACTORY. USE WHERE WELDABLE MATERIAL IS REQUIRED AND USE OF 5% AL. 2½% Sn. ALLOY IS NOT JUSTIFIED. (CORRESPOND TO I.C.I.130) | 81,000 (36) | 76,000 (34) | 57,000 (25.5) | 52,000 | 123,000 | 123,000 | 15.5 | 6.5 | 18 |
| DHA. 72 | TITANIUM (COMMly. PURE) | FOR GENERAL USE WHERE LOW STRENGTH BAR IS UNSATISFACTORY. USE WHERE WELDABLE MATERIAL IS REQUIRED AND USE OF 5% AL. 2½% Sn. ALLOY IS NOT JUSTIFIED (CORRESPONDS TO JESSOPS HYLITE 10) | 56,000 (25) | 54,000 (24) | 40,000 (18) | 36,000 | 83,000 | 83,000 | | | 20 |
| | | SHEAR AND BEARING FIGURES ARE PROVISIONAL | | | | | | | | | |

DESIGN DATA III/6A
SHEET NO.

| Issue No. | Date | Compiled | Traced | Approved |
|---|---|---|---|---|
| 1 | AUG '55 | BMW | | AJT. |
| 2 | JULY '56 | | | |

# THE DE HAVILLAND AIRCRAFT COMPANY LTD., HATFIELD, HERTS.

BAR & EXTRUSION, ALUMINIUM ALLOY

| SPEC | MATERIAL | REMARKS | | MAX. PERMISSIBLE STRESS LBS/INS.$^2$ (TONS/INS.$^2$) TENSION CIVIL AIRCRAFT | TENSION SERVICE AIRCRAFT | 1% PROOF | SHEAR | BEARING CIVIL AIRCRAFT | BEARING SERVICE AIRCRAFT | E $\times 10^{-6}$ | G $\times 10^{-6}$ | ELONG. N % |
|---|---|---|---|---|---|---|---|---|---|---|---|---|
| L.34 | ALUMINIUM | BAR, SUITABLE FOR WELDING OR BRAZING (DHA.392 TO SIMILAR SPECS AS DTD.372) USE ONLY FOR LOW STRESSED PARTS AND WELDED TANK FITTINGS. GOOD THREAD CUTTING DIFFICULT. ANODISING UNNECESSARY | | 11,200 (5) | 11,200 (5) | | | | | | | |
| DTD. 372 | ALUMINIUM MAGNESIUM ALLOY | GOOD MACHINING PROPERTIES, SUITABLE FOR BRAZING (DHA.392) ONLY TO L.16, L.59 AND L.61 SHEET. L.34 AND DTD.372 BAR, L.67 AND DHA.63 TUBE AND L.33 AND DTD.245 CASTINGS. | | 20,200 (9) | 20,200 (9) | 15,100 (6.75) | 13,400 | 34,000 | 30,000 | 10.5 | 3.9 | 18 |
| | | | BRAZED | 6,700 (3) | 6,000 (2.66) | 4,500 (2) | | 10,000 | 9,000 | | | 40 |
| DTD. 423 | ALUMINIUM ALLOY | REF. ONLY ⊙ | | 49,000 (22) | 49,000 (22) | 38,000 (17) | 27,000 | 85,000 | 76,000 | 10.5 | 3.9 | 8 |
| L.64 | ALUMINIUM ALLOY | SOLUTION TREATED & NATURALLY AGED CONDITION OF L.65 BAR FOR GENERAL USE ON COMPONENTS REQUIRING BAR SIZE ABOVE 2" AND EXTRUSIONS FOR MISCELLANEOUS SECTIONS. USE IN PLACE OF DTD.423 FOR ALL NEW DESIGN WORK. WHERE IT IS ESSENTIAL THAT L.64 MATERIAL ONLY BE USED, DRGS. WILL CALL UP 'L.64 NO ALTERNATIVE'. NOT SUITABLE FOR WELDING. REPLACES L.1 & L.39. | ⊀ 3/8" | 47,000 (21) | 42,000 (18.7) | 31,500 (14) | 28,500 | 87,000 | 79,000 | 10.5 | 3.9 | 15 |
| | | | ⊀ 4" | 50,000 (22.5) | 45,000 (20) | 33,500 (15) | 30,000 | 92,000 | 83,000 | | | 15 |
| | | | ⊀ 8" | 40,000 (18) | 36,000 (16) | 27,000 (12) | 27,600 | 76,000 | 67,000 | | | 12 |
| L.65 | ALUMINIUM ALLOY | SOLUTION TREATED AND PRECIPITATED CONDITION OF L.64 BAR FOR GENERAL USE ON BAR SIZES 2" AND SMALLER, ALSO FOR LARGER BAR SIZES WHERE PROPERTIES HIGHER THAN L.64 ARE ESSENTIAL. GOOD MACHINABILITY. DO NOT THREAD LESS THAN 1/4". SEE NOTES 1 & 2 ON PAGE III/7B. NOTE 2 MUST BE GIVEN ON COMPONENTS REQUIRING A VERY GOOD FINISH FOR STRUCTURAL REASONS. REPLACES DTD.364 | ⊀ 3/8" | 63,000 (28) | 63,000 (28) | 54,000 (24) | 33,000 | 108,000 | 96,000 | 10.5 | 3.9 | 8 |
| | | | ⊀ 1" | 67,000 (30) | 67,000 (30) | 58,000 (26) | 35,500 | 108,000 | 96,000 | | | |
| | | | ⊀ 2" | 72,000 (32) | 72,000 (32) | 63,000 (28) | 39,000 | 119,000 | 105,000 | | | |
| | | | ⊀ 3" | 70,000 (31) | 70,000 (31) | 60,000 (27) | 36,500 | 119,000 | 105,000 | | | |
| | | | ⊀ 4" | 67,000 (30) | 67,000 (30) | 58,000 (26) | 35,500 | 119,000 | 105,000 | | | |
| | | | ⊀ 6" | 63,000 (28) | 63,000 (28) | 54,000 (24) | 33,000 | 108,000 | 96,000 | | | |
| | | ⊙ DTD.423 SHOULD NOT BE CALLED UP FOR NEW DESIGN WORK. (STANDARDISATION OF MATERIALS L.64 & L.65) IT MAY BE USED FOR SPECIAL EXTRUSIONS WHERE REQUESTED BY SUPPLIER. | | NOTE : RULING THICKNESSES GIVEN ARE FOR REGULAR SECTION BAR. SEE III/7C FOR RECTANGULAR BAR. | | | | | | | | |

DESIGN DATA SHEET NO. III/7A

| ISSUE NO. | DATE |
|---|---|
| 1 | Aug.'55 |
| 2 | July'56 |

COMPILED: BFN

TRACED:

APPROVED: AWT.

THE DE HAVILLAND AIRCRAFT COMPANY LTD., HATFIELD, HERTS.

BAR & EXTRUSION, ALUMINIUM & MAGNESIUM ALLOY.

DESIGN DATA III/7B
SHEET NO.

| SPEC | MATERIAL | REMARKS | | MAX. PERMISSIBLE STRESS LBS/INS.$^2$ (TONS/INS.$^2$) TENSION CIVIL AIRCRAFT | TENSION SERVICE AIRCRAFT | .1% PROOF | SHEAR | BEARING CIVIL AIRCRAFT | BEARING SERVICE AIRCRAFT | E $x10^{-6}$ | G $x10^{-6}$ | ELONG. N % |
|---|---|---|---|---|---|---|---|---|---|---|---|---|
| DTD. 363 | ALUMINIUM ALLOY | HIGH TENSILE ALLOY. BAR AND EXTRUSION FOR HIGH LOAD CARRYING COMPONENTS. THE USE OF L.65 OR DHA.78 IS PREFERABLE WHERE STRENGTH PERMITS. SEE NOTES 1 & 2. NOTE 2 MUST BE GIVEN ON ALL DTD.363 COMPONENTS | ≯ 3/8" | 78,000 (35) | 78,000 (35) | 67,000 (30) | 45,000 | 148,000 | 121,000 | 10.5 | 3.9 | 7 |
| | | | ≯ 3" | 85,000 (38) | 85,000 (38) | 74,000 (33) | 47,000 | 157,000 | 139,000 | | | |
| | | | ≯ 4" | 83,000 (37) | 83,000 (37) | 72,000 (32) | 46,000 | 157,000 | 134,000 | | | |
| | | | ≯ 5" | 81,000 (36) | 81,000 (36) | 70,000 (31) | 45,000 | 152,000 | 130,000 | | | |
| | | | ≯ 6" | 77,000 (34.5) | 77,000 (34.5) | 66,000 (29.5) | 43,000 | 148,000 | 121,000 | | | |
| DHA. 78 | ALUMINIUM ALLOY | SUPPLIED IN SOLUTION TREATED AND NATURALLY AGED AND STRETCHED CONDITION. i.e. FULLY HEAT TREATED USE WHERE FATIGUE NOT STATIC STRENGTH IS THE CRITERION FOR SPECIAL EXTRUSIONS ONLY. NOTE: RE-SOLUTION HEAT TREATMENT RESULTS IN LOSS OF PROPERTIES EQUIVALENT TO MATERIAL SPEC. 24.S. | DIA. OR LEAST DISTANCE BETWEEN PARALLEL FACES (INS.) .05 TO .249 | 57,000 (25.5) | 53,800 (24) | 40,300 (18) | 32,500 | 91,000 | 80,600 | | | 12 |
| | | | .25 TO .749 | 59,300 (26.5) | 55,000 (24.6) | 41,400 (18.5) | 33,600 | 93,000 | 82,800 | | | 12 |
| | | | .75 TO 1.499 | 65,000 (29) | 58,200 (26) | 43,700 (19.5) | 36,000 | 98,500 | 87,400 | | | 10 |
| | | | 1½"& Over Up to & including 25 sq.in. area | 69,500 (31) | 65,600 (29.3) | 49,200 (22) | 38,000 | 111,000 | 98,400 | | | 10 |
| | | | 1½" & over, & over 25 sq. in. up to & including 32 sq. in. area. | 67,000 (30) | 61,200 (27.3) | 45,800 (20.5) | 37,000 | 103,000 | 91,600 | | | 8 |
| | | | Re-solution Heat Treated by User | 53,700 (24) | 47,700 (21.3) | 35,800 (16) | 32,500 | 81,000 | 71,600 | | | 12 |
| | | NOTE 1. SEE NOTES IN SECTION II RE. COARSE GRAIN LOADING ACROSS GRAIN AND SIZE/STRENGTH LIMITATIONS OF EXTRUSIONS. | | NOTE 2. DRAWINGS TO QUOTE WHERE APPLICABLE:- 'MACHINED SURFACES & RADII TO BE FREE FROM SCORES OR OTHER MARKS & FINISHED TO DHA.401'. | | | | | | | | |
| DTD. 259 | MAGNESIUM ALLOY | BAR FOR MACHINING LIGHTLY STRESSED PARTS OR END PLUGS, CAPPINGS ETC. BUT NOT THREADED, ALSO MISCELLANEOUS EXTRUSIONS WHERE NOT SUBJECT TO SEVERE CORROSION. CAN BE ARGON ARC WELDED TO DTD.348 TUBE. REQUIRED CHROMATING. | | 30,000 (13.5) | 27,000 (12) | 20,200 (9) | 17,900 | 39,000 | 39,000 | | | |

## RECTANGULAR BAR

MAX. PERMISSIBLE STRESS LBS/INS$^2$. (TONS/INS$^2$.)

B.S.L.65 (% ELONGATION 8)

| WIDTH (MAJOR DIMENSION) → | OVER 1IN.-3IN. | | OVER 3IN.-4IN. | | OVER 4IN.-5IN. | | OVER 5IN.-6IN. | |
|---|---|---|---|---|---|---|---|---|
| THICKNESS | UTS. | .1% PS. | UTS. | .1% PS. | UTS. | .1% PS. | UTS. | .1% PS. |
| 3/8 - 1IN. | 67,000 (30) | 58,000 (26) | 67,000 (30) | 58,000 (26) | | | | |
| OVER 1IN. - 2IN. | 72,000 (32) | 63,000 (28) | 72,000 (32) | 63,000 (28) | 70,000 (31) | 60,000 (27) | 70,000 (31) | 60,000 (27) |
| OVER 2IN. - 3IN. | 70,000 (31) | 60,000 (27) | 68,000 (30.5) | 59,000 (26.5) | 67,000 (30) | 58,000 (26) | 65,000 (29) | 56,000 (25) |
| OVER 3IN. - 4IN. | | | 67,000 (30) | 58,000 (26) | 65,000 (29) | 56,000 (25) | 63,000 (28) | 54,000 (24) |
| OVER 4IN. - 5IN. | | | | | 63,000 (28) | 54,000 (24) | 63,000 (28) | 54,000 (24) |
| OVER 5IN. - 6IN. | | | | | | | 63,000 (28) | 54,000 (24) |

D.T.D.363 (% ELONGATION 7)

| | | | | | | | | |
|---|---|---|---|---|---|---|---|---|
| 3/8 - 1IN. | 85,000 (38) | 74,000 (33) | 85,000 (38) | 74,000 (33) | | | | |
| OVER 1 IN. - 2IN. | 85,000 (38) | 74,000 (33) | 85,000 (38) | 74,000 (33) | 84,000 (37.5) | 73,000 (32.5) | 83,000 (37) | 72,000 (32) |
| OVER 2 IN. - 3IN | 85,000 (38) | 74,000 (33) | 84,000 (37.5) | 73,000 (32.5) | 83,000 (37) | 72,000 (32) | 82,000 (36.5) | 71,000 (31.5) |
| OVER 3 IN. - 4IN. | | | 83,000 (37) | 72,000 (32) | 82,000 (36.5) | 70,000 (31) | 81,000 (36) | 70,000 (31) |
| OVER 4 IN. - 5IN. | | | | | 81,000 (36) | 70,000 (31) | 80,000 (35.5) | 68,000 (30.5) |
| OVER 5 IN. - 6IN. | | | | | | | 77,000 (34.5) | 66,000 (29.5) |

## EXTENT OF COARSE GRAIN BANDING.

| | OVER 3/8 & UP TO 1 IN. | OVER 1/2 IN. | OVER 2-3 IN. | OVER 3-5 IN. | OVER 5-7 IN. |
|---|---|---|---|---|---|
| OVER 3/8 - 1IN. | 1/10 | 1/8 | 1/8 | 3/16 | 3/16 |
| OVER 1 IN. - 2IN. | | 1/8 | 3/16 | 3/16 | 1/4 |
| OVER 2 IN. - 3IN. | | | 1/4 | 1/4 | 1/4 |
| OVER 3 IN. - 5IN. | | | | 5/16 | 5/16 |
| OVER 5 IN. - 7IN. | | | | | 5/16 |

INCHES

PROPERTIES GIVEN ABOVE FOR RECTANGULAR BAR ARE CORE PROPERTIES BUT WILL BE USED AS THE OVERALL PROPERTY FOR DESIGN CALCULATIONS.
PROPERTIES OF REGULAR BAR SECTIONS ARE GIVEN ON DATA SHEET NO. III/7A & 7B.

OTHER PROPERTIES AS FOLLOWS: -

PERMISSIBLE TENSION.

CIVIL; LESSER OF U.T.S. & 1.5 x 0.1% PROOF.

SERVICE; LESSER OF U.T.S. & 1.33 x 0.1% PROOF.

SHEAR; RATIO VALUES FROM III/7A, 7B ACCORDING TO PERMISSIBLE TENSION.

BEARING; RATIO VALUES FROM III/7A, 7B ACCORDING TO 0.1% PROOF.

E & G; AS ON III/7A, 7B.

| ISSUE NO. | DATE |
|---|---|
| 1 | AUG.'55 |

COMPILED. BAN

TRACED.

APPROVED. Aut.

PROPERTIES OF LIGHT ALLOY RECTANGULAR BAR.

DESIGN DATA SHEET NO. III/7C

| ISSUE NO. | DATE | COMPILED | TRACED | APPROVED |
|---|---|---|---|---|
| 1 | AUG. '55 | BAN | | |

THE DE HAVILLAND AIRCRAFT COMPANY LTD., HATFIELD, HERTS.

| SPEC | MATERIAL | REMARKS | | MAX. PERMISSIBLE STRESS LBS/INS.$^2$ (TONS/INS.$^2$) TENSION CIVIL AIRCRAFT | TENSION SERVICE AIRCRAFT | .1% PROOF | SHEAR | BEARING CIVIL AIRCRAFT | BEARING SERVICE AIRCRAFT | E $x10^{-6}$ | G $x10^{-6}$ | ELONG. N % |
|---|---|---|---|---|---|---|---|---|---|---|---|---|
| B. 11 | BRASS | BRASS BARS SUITABLE FOR BRAZING AND SILVER SOLDERING. | | 37,000 (16.5) | 32,500 (14.5) | 24.500 (11) | 27,000 | 56,000 | 49,000 | 14 | 5.6 | 25 |
| BS. 249 | BRASS | BRASS BARS FOR GENERAL USE. SUITABLE FOR SOFT SOLDERING ONLY. | | 47,000 (21) | 43,000 (19) | 31,500 (14) | 33,500 | 72,000 | 63,000 | 14 | 5.6 | 15 |
| DTD. 197 | ALUMINIUM NICKEL-IRON BRONZE | FOR BARS, FORGINGS AND STAMPINGS. (ALTERNATIVE TO IMMADIUM VI.) | UP TO AND INCLUDING 4″ DIA. | 84,000 (37.5) | 74,000 (33) | 56,000 (25) | 56,000 | 125,000 | 112,000 | 17 | 6.8 | 15 |
| | | | OVER 4″ DIA. | 67,000 (30) | 60,000 (26.7) | 45,000 (20) | 45,000 | 101,000 | 90,000 | 17 | 6.8 | 15 |

BAR - BRASS & BRONZE.

DESIGN DATA III/8A
SHEET NO.

THE DE HAVILLAND AIRCRAFT COMPANY LTD., HATFIELD, HERTS.

| ISSUE NO. | DATE |
|---|---|
| 1 | AUG. '55 |

COMPILED: BKN.

TRACED:

APPROVED: Awt.

TUBES - STEEL, NON-STAINLESS

| SPEC | MATERIAL | REMARKS | | MAX. PERMISSIBLE STRESS LBS/INS.$^2$ (TONS/INS.$^2$) TENSION CIVIL AIRCRAFT | TENSION SERVICE AIRCRAFT | .2% PROOF | SHEAR | BEARING CIVIL AIRCRAFT | BEARING SERVICE AIRCRAFT | E $x10^{-6}$ | G $x10^{-6}$ | ELONG. N % |
|---|---|---|---|---|---|---|---|---|---|---|---|---|
| T. 26 | MILD STEEL | CARBON STEEL TUBE, ALL DIAMETERS. FOR LOW STRESSED PARTS - DISTANCE TUBES, STAYS, BENT TUBES ETC., ALSO NON-CIRCULAR TUBES. | UNWELDED | 63,000 (28) | 63,000 (28) | 54,000 (24) | 40,000 | 119,000 | 108,000 | 28 | 12 | |
| | | | WELDED | 37,000 (16.5) | 31,500 (14) | 24,000 (10.8) | 27,000 | 56,000 | 49,000 | 29 | 12.5 | |
| T. 35 | MANGANESE STEEL | HIGHER GRADE THAN T. 26 FOR ROUND TUBES BELOW 1/2" DIA. ALSO NON-CIRCULAR TUBES. | UNWELDED | 78,000 (35) | 78,000 (35) | 67,000 (30) | 56,000 | 148,000 | 134,000 | 28 | 12 | |
| | | | WELDED | 67,000 (30) | 67,000 (30) | 56,000 (25) | 47,000 | 125,000 | 112,000 | 28.5 | 12 | |
| T. 45 | MANGANESE STEEL | SAME MATERIAL AS T. 35 FOR ROUND TUBES 1/2" DIA. AND OVER. REDUCES TO T. 35 AFTER WELDING. FOR CONN RODS, BRACING TUBES, STRUTS ETC. | UNWELDED | 101,000 (45) | 101,000 (45) | 90,000 (40) | 67,000 | 184,000 | 163,000 | 28.5 | 12 | |
| | | | WELDED | 67,000 (30) | 67,000 (30) | 56,000 (25) | 47,000 | 125,000 | 112,000 | 28.5 | 12 | |
| T. 50 | MANGANESE STEEL | FOR CIRCULAR AND NON-CIRCULAR TUBES. USE FOR PINNED TUBULAR STRUCTURES ETC. UNSUITABLE FOR WELDING. | | 112,000 (50) | 112,000 (50) | 100,000 (44.5) | 78,000 | 201,000 | 179,000 | 28 | 11.7 | |
| T. 59 | CHROME MOLYBDENUM STEEL | FOR CIRCULAR AND NON-CIRCULAR TUBES, USE FOR WELDED STRUCTURES, LARGE ENGINE MOUNTINGS ETC. REPLACES DTD. 347. | UNWELDED | 112,000 (50) | 112,000 (50) | 101,000 (45) | 78,000 | 208,000 | 186,000 | 30.5 | 12.1 | |
| | | | WELDED | 101,000 (45) | 101,000 (45) | 90,000 (40) | 69,000 | 186,000 | 166,000 | 30.5 | 12.1 | |
| T. 60 | CHROME MOLYBDENUM STEEL * | FOR HIGHLY STRESSED PARTS SUCH AS MAIN U/C HINGE PINS, U/C LEG PLUNGER TUBES & CERTAIN STRUCTURES. REPLACES DTD. 408. HARDENED & TEMPERED | MAX. WALL 5/16" UNWELDED | 168,000 (75) | 168,000 (75) | 152,000 (68) | 112,000 | 318,000 | 300,000 | 29.5 | 12.1 | 10 |
| | | | MAX. WALL 3/16" WELDED | 112,000 (50) | 112,000 (50) | 101,000 (45) | 78,000 | 213,000 | 201,000 | 29.5 | 12.1 | |
| T. 57 | NICKEL CHROME STEEL. * | PREFERABLE TO T. 60 FOR SIMILAR APPLICATIONS BUT NOT SUITABLE FOR WELDING. | | 168,000 (75) | 168,000 (75) | 152,000 (68) | 112,000 | 318,000 | 291,000 | 29.5 | 12.1 | 10 |

NOTE: - TUBES REQUIRED TO BE BENT MAY ALSO REQUIRE ANNEALING AND THE 'WELDED' VALUES WILL APPLY.

* NOTES ON SHEET III/5C MUST BE ADDED TO DRAWING.

| Approved | Traced | Compiled | Issue No. | Date |
|---|---|---|---|---|
| Hwt. | | BMN | 3rd | JULY '56 |
| | | | 2 | AUG '55 |

# THE DE HAVILLAND AIRCRAFT COMPANY LTD., HATFIELD, HERTS.

## TUBES, - STEEL, STAINLESS.

| SPEC | MATERIAL | REMARKS | MAX. PERMISSIBLE STRESS LBS/INS.$^2$ (TONS/INS.$^2$) TENSION CIVIL AIRCRAFT | TENSION SERVICE AIRCRAFT | .2% PROOF | SHEAR | BEARING CIVIL AIRCRAFT | BEARING SERVICE AIRCRAFT | E $x10^{-6}$ | G $x10^{-6}$ | ELONG. N % |
|---|---|---|---|---|---|---|---|---|---|---|---|
| † T. 55 | CHROME NICKEL LOW TENSILE STEEL | FOR MEDIUM STRESSED PARTS. STAINLESS EQUIVALENT TO T. 26 AND T. 35. WELDABLE. NON-MAGNETIC. USE FOR PUSH RODS, SPECIAL FUEL PIPES, HEATER PIPES IN EXHAUST MANIFOLDS, ETC. NOT SUITABLE FOR FLARING UNAFFECTED BY WELDING. REPLACES DTD. 207. | 62,000 (27.5) | 54,000 (24) | 40,000 (18) | 43,000 | 76,000 | 67,000 | 27 | 10.7 | |
| † DTD. 743 | CHROME NICKEL L. T. STEEL | AS T. 55. 3/16" O/DIA. AND OVER CAN BE FLARED TO AGS. 1101. USE FOR FUEL AND HYDRAULIC PIPES WHERE NON-CORRODIBLE STEEL TUBE IS REQUIRED. | 62,000 (27.5) | 54,000 (24) | 40,000 (18) | 43,000 | 76,000 | 67,000 | 27 | 10.7 | |
| T. 58 | CHROME NICKEL HIGH TENSILE STEEL | SIMILAR MATERIAL TO T. 55 BUT FULLY HEAT TREATED. WELDABLE. REDUCES TO T. 55 IN REGION OF WELD. USE FOR ARRESTER HOOK STRUTS, ETC. AND PLACES WHERE EXCESSIVE CORROSION CONDITIONS EXIST. NON-MAGNETIC. REPLACES DTD. 211. — UNWELDED | 112,000 (50) | 112,000 (50) | 101,000 (45) | 78,000 | 186,000 | 166,000 | 25.5 | 10.9 | |
| | | WELDED | 62,000 (27.5) | 54,000 (24) | 40,000 (18) | 43,000 | 90,000 | 81,000 | 27 | 10.7 | |
| † T. 61 | CHROME STEEL | HEAT RESISTING STEEL TUBE - SUITABLE FOR EXHAUST MANIFOLDS, NON-MAGNETIC, WELDABLE. REPLACES DTD. 491. — TUBES DELIVERED IN FULLY SOFTENED CONDITION | 50,000 (22.5) | 45,000 (20) | 33,500 (15) | | | | | | |

† IF BENT AROUND RADIUS LESS THAN 5D DRAWINGS WILL CALL UP 'STRESS RELIEVE TO THE REQUIREMENTS OF D.H.A.411'.

NOTE:- TUBES REQUIRED TO BE BENT MAY ALSO REQUIRE ANNEALING AND THE 'WELDED' VALUES WILL APPLY.

DESIGN DATA SHEET NO. III/9B

| ISSUE NO. | DATE | COMPILED | TRACED | APPROVED |
|---|---|---|---|---|
| 1 | AUG. '55 | | | |

# TUBES - LIGHT ALLOY & MAGNESIUM.

| SPEC | MATERIAL | REMARKS | | MAX. PERMISSIBLE STRESS LBS/INS.$^2$ (TONS/INS.$^2$) TENSION CIVIL AIRCRAFT | TENSION SERVICE AIRCRAFT | .1% PROOF | SHEAR | BEARING CIVIL AIRCRAFT | BEARING SERVICE AIRCRAFT | E $\times 10^{-6}$ | G $\times 10^{-6}$ | ELONG. N % |
|---|---|---|---|---|---|---|---|---|---|---|---|---|
| L. 67 | ALUMINIUM | PURE ALUMINIUM TUBE FOR GENERAL USE. WELDABLE. REPLACES T. 9. | | 17,900 (8) | 17,900 (8) | 15,700 (7) | 11,200 | 33,500 | 31,500 | 9.6 | 3.6 | |
| L. 56 | ALUMINIUM ALLOY (ANNEALED) | FOR FUEL, OIL AND AIR PIPE LINES. MUCH STIFFER THAN L. 67 MAY BE JOINED TO L. 59, L. 33, L. 34 & DTD. 245 BY BRAZING (TO DHA. 392) WITH A SUITABLE JOINT. IF CUTTING & WELDING IS NECESSARY USE DHA. 63. REPLACES DTD. 310. | 3/16" & 1/4". | 13,400 (6) | 11,900 (5.3) | 9,000 (4) | 8,000 | 20,200 | 18,000 | 10 | 3.6 | |
| | | | 5/16" & 3/8". | 15,200 (6.8) | 13,400 (6) | 10,100 (4.5) | 9,000 | 22,500 | 20,200 | | | |
| | | | OVER 3/8" | 16,800 (7.5) | 15,000 (6.7) | 11,200 (5) | 10,100 | 24,500 | 22,500 | | | |
| DHA. 63 | ALUMINIUM ALLOY | PRINCIPALLY FOR AIR DUCTS AND LARGER DIA. PIPES TO BE WELDED TOGETHER OR TO L. 59 SHEET TO BE USED IN PLACE OF L. 56 ONLY WHERE WELDING IS REQUIRED. | UNWELDED | 19,000 (8.5) | 19,000 (8.5) | 13,900 (6.2) | 11,200 | 31,500 | 28,000 | 7.5 | 2.9 | |
| | | | WELDED | 10,100 (4.5) | 9,000 (4) | 6,700 (3) | 6,700 | 15,200 | 13,400 | | | |
| L. 55 | ALUMINIUM ALLOY (HARD DRAWN) | MEDIUM STRENGTH ALLOY - USE FOR DISTANCE TUBES, LIGHT STRUCTURES ETC. REVERTS TO L. 56 FIGURES WHEN BRAZED OR HEAT TREATED FOR BENDING. REPLACES DTD. 440. | | 33,500 (15) | 33,500 (15) | 24,500 (11) | 20,200 | 54,000 | 47,000 | 10 | 3.6 | |
| L. 63 | ALUMINIUM ALLOY | HIGH STRENGTH ALLOY FULLY HEAT TREATED. USE FOR CONN. RODS, STRUCTURES ETC. CANNOT BE WELDED. REPLACES DTD. 464. | | 65,000 (29) | 65,000 (29) | 52,000 (23) | 36,000 | 108,000 | 96,000 | 10.5 | 4.0 | |
| | | NOTE:- TUBES REQUIRED TO BE BENT MAY ALSO REQUIRE ANNEALING AND THE 'WELDED' VALUES WILL APPLY. | | | | | | | | | | |
| DTD. 348 | MAGNESIUM ALLOY | FOR LOW STRESSED PARTS ALSO FOR PILOT AND PASSENGER SEATS, CRATES ETC. CAN BE WELDED TO DTD. 259 STRIP. | BEFORE WELDING. | 36,000 (16) | 36,000 (16) | | | | | | | |
| | | | AFTER WELDING. | 20,200 (9) | 20,200 (9) | | | | | | | |

DESIGN DATA III/11A
SHEET NO.

THE DE HAVILLAND AIRCRAFT COMPANY LTD., HATFIELD, HERTS.

THE DE HAVILLAND AIRCRAFT COMPANY LTD., HATFIELD, HERTS.

| ISSUE NO. | DATE |
|---|---|
| 1 | AUG. '55 |

COMPILED: BKN

TRACED:

APPROVED: [illegible]

| SPEC | MATERIAL | REMARKS | | MAX. PERMISSIBLE STRESS LBS/INS.$^2$ (TONS/INS.$^2$) TENSION CIVIL AIRCRAFT | TENSION SERVICE AIRCRAFT | .1% PROOF | SHEAR | BEARING CIVIL AIRCRAFT | BEARING SERVICE AIRCRAFT | E $x10^{-6}$ | G $x10^{-6}$ | ELONG. N % |
|---|---|---|---|---|---|---|---|---|---|---|---|---|
| T. 7 | COPPER | MEDIUM LOW PRESSURE, ANNEALED, FOR ELBOWS, BENT PIPES ETC. AND GENERAL USE. TUBES UP TO 1" DIA. | SOFT | 31,500 (14) | | | | | | | | |
| | | TUBES OVER 1" DIA. | HALF HARD | 45,000 (20) | | | | | | | | |
| T. 51 | COPPER | HIGH PRESSURE SEAMLESS TUBE FOR OXYGEN SYSTEMS ETC. | | | | | | | | | | |
| | | | | | | | | | | | | |
| BS885. ANNEALED | BRASS | ANNEALED SEAMLESS TUBE FOR GENERAL USE. THE DRAWING MUST STATE THE CONDITION. REPLACES BS. 886. | ANNEALED | 40,000 (18) | | | | | | | | |
| | | | | | | | | | | | | |
| DTD. 323 TO DHA 64 | TUNGUM | FOR HIGH PRESSURE PIPE LINES, HYDRAULIC AND AIR SYSTEMS ETC. AVAILABLE IN THE FOLLOWING SIZES ONLY<br>* 5/16" O/D x 24 SWG. 5/8" O/D x 18 SWG.<br>1/2" O/D x 20 SWG. 7/16" O/D x 20 SWG.<br>3/8" O/D x 22 SWG. 5/16" O/D x 22 SWG.<br>1/4" O/D x 24 SWG. 3/16" O/D x 24 SWG.<br>1/8" O/D x 24 SWG. | CAN BE SILVER SOLDERED AND BRAZED. | 60,000 (27) | | * TEST PRESSURE 3750 LBS. SQ. IN. ALL OTHER SIZES THE TEST PRESSURE IS 4,500 LBS. SQ. IN. | | | | | | |
| DTD. 323 | TUNGUM | FOR HIGH PRESSURE PIPE LINES, HYDRAULIC AND AIR SYSTEMS IN SWG. AND DIAS. OTHER THAN THOSE LISTED ABOVE. | | 60,000 (27) | | | | | | | | |
| DTD. 253 | TUNGUM | FOR LOW PRESSURE PIPE LINES, HYDRAULIC AND AIR SYSTEMS, ETC. | | | | | | | | | | |
| | | NOTE:- REFER TO INDIVIDUAL SPECIFICATIONS FOR PERMISSIBLE INTERNAL PRESSURES WITH VARYING TUBE SIZES. | | | | | | | | | | |

TUBES - COPPER, BRASS & TUNGUM.

DESIGN DATA III/12A
SHEET NO.

# THE DE HAVILLAND AIRCRAFT COMPANY LTD., HATFIELD, HERTS.

| Issue No. | Date |
|---|---|
| 1 | AUG '55 |
| 2 | JULY '56 |

Compiled BFN

Traced

Approved AUT.

| SPEC | MATERIAL | REMARKS | MAX. PERMISSIBLE STRESS LBS/INS.$^2$ (TONS/INS.$^2$) TENSION CIVIL AIRCRAFT | TENSION SERVICE AIRCRAFT | 1% PROOF | SHEAR | BEARING CIVIL AIRCRAFT | BEARING SERVICE AIRCRAFT | E $x10^{-6}$ | G $x10^{-6}$ | ELONG. N % |
|---|---|---|---|---|---|---|---|---|---|---|---|
| | | NOTE :– WHERE THE GRAIN FLOW IS IMPORTANT ON ANY STEEL FORGINGS IT MUST BE SHOWN ON DRAWING. SEE SECTION II, PARA.1. | | | | | | | | | |
| S.93 | MILD STEEL ⊙ | FOR GENERAL USE<br>UNSUITABLE FOR WELDING REPLACES S.6 | 67,000 (30) | 60,000 (27) | 45,000 (20) | 54,000 | 121,000 | 108,000 | 28.5 | 11.5 | 20<br>8 |
| S.92 | MILD STEEL ⊙ | FOR MEDIUM STRESSED FORGINGS UNWELDED | 90,000 (40) | 90,000 (40) | 70,000 (31) | 58,000 | 157,000 | 139,000 | 28 | 11.5 | 20<br>8 |
| | | WELDABLE WELDED | 63,000 (28) | 55,000 (24.5) | 42,000 (18.5) | 45,000 | 94,000 | | 30 | 12 | |
| S.96 | H.T.S. * | FOR STRESSED PARTS SUCH AS JOINT FITTINGS & UNDERCARRIAGE PARTS, ETC. PREFERRED TO A L.A. FORGING WHERE A SINGLE LUG CONSTITUTES THE SOLE LOAD PATH. UNSUITABLE FOR WELDING REPLACES S.11 | 123,000 (55) | 123,000 (55) | 96,000 (43) | 81,000 | 217,000 | 193,000 | 28.5 | 11.5 | 18<br>7 |
| S.97 | H.T.S. * | USE FOR SIMILAR PARTS AS ABOVE WHERE THE HIGHER STRENGTH IS REQUIRED.<br>UNSUITABLE FOR WELDING. REPLACES S.65. | 146,000 (65) | 146,000 (65) | 121,000 (54) | 90,000 | 269,000 | 240,000 | 29 | 12 | Up to 4" 16/7<br>Over 4" 14/7 |
| S.98 | H.T.S. * | NOT TO BE USED FOR FORGED COMPONENTS WITHOUT APPROVAL OF DESIGNER IN CHARGE OF THE AIRCRAFT.<br>UNSUITABLE FOR WELDING. REPLACES DTD.473 | 168,000 (75) | 168,000 (75) | 146,000 (65) | 108,000 | 320,000 | 291,000 | 29 | 11.5 | Up to 4" 14/7<br>Over 4" 12/7 |
| S.82 | CASE HARDENING STEEL * | FOR HIGHLY STRESSED CASE HARDENED PARTS | 168,000 (75) | 150,000 (67) | 112,000 (50) | 116,000 | 251,000 | 224,000 | 25.5 | 10 | 12<br>7 |
| | | THE TWO SETS OF FIGURES FOR ELONGATION ARE FOR LONGITUDINAL AND TRANSVERSE DIRECTIONS – THE TOP FIGURE BEING FOR LONGITUDINAL<br>⊙ PARTS MADE FROM THESE MATERIALS MUST HAVE THE FOLLOWING NOTE ON THEIR RESPECTIVE DRAWINGS. 'CRACK TEST TO D.H.A.324'<br>* NOTES ON SHEET III/5C MUST BE ADDED TO DRAWING | | | | | | | | | |

FORGINGS, STAMPINGS. NON-STAINLESS, STEEL

DESIGN DATA SHEET NO. III/13A

# THE DE HAVILLAND AIRCRAFT COMPANY LTD., HATFIELD, HERTS.

| Issue No. | Date |
|---|---|
| 1 | AUG '55 |
| 2 | JULY '56 |

Compiled: BAW

Traced:

Approved: RWT

| SPEC | MATERIAL | REMARKS | MAX. PERMISSIBLE STRESS LBS/INS.$^2$ (TONS/INS.$^2$) TENSION CIVIL AIRCRAFT | TENSION SERVICE AIRCRAFT | 1% PROOF | SHEAR | BEARING CIVIL AIRCRAFT | BEARING SERVICE AIRCRAFT | E $x10^{-6}$ | G $x10^{-6}$ | ELONG. % N |
|---|---|---|---|---|---|---|---|---|---|---|---|
| S. 110 | LOW TENSILE STEEL | CAN BE WELDED TO DTD. 571 SHEET. NON-MAGNETIC. USE FOR LOW STRESSED PARTS. REPLACES DTD. 176. | 44,000 (19.5) | 39,000 (17.3) | 29,000 (13) | 49,000 | 65,000 | 58,000 | 28 | 11.5 | 30 / 10 |
| S. 80 | HIGH TENSILE STEEL | FOR HIGHLY STRESSED PARTS. STAINLESS EQUIVALENT TO S. 96. UNSUITABLE FOR WELDING. DRGS. WILL QUOTE 'CRACK TEST TO D.H.A. 408'. | 123,000 (55) | 120,000 (53.5) | 90,000 (40) | 81,000 | 208,000 | 186,000 | 28 | 11.5 | 15 / 7 |

THE TWO SETS OF FIGURES FOR ELONGATION ARE FOR LONGITUDINAL AND TRANSVERSE DIRECTIONS, THE TOP FIGURE BEING FOR LONGITUDINAL

FORGINGS, STAMPINGS. STAINLESS STEEL.

DESIGN DATA: III/13B
SHEET NO.

| APPROVED | TRACED | COMPILED | ISSUE NO. | DATE |
|---|---|---|---|---|
| | | | 2 | July'56 |
| | | | 1 | AUG.'55 |

THE DE HAVILLAND AIRCRAFT COMPANY LTD., HATFIELD, HERTS.

FORGINGS, STAMPINGS. TITANIUM & TITANIUM ALLOY.

| SPEC | MATERIAL | REMARKS | MAX. PERMISSIBLE STRESS LBS/INS.$^2$ (TONS/INS.$^2$) TENSION CIVIL AIRCRAFT | TENSION SERVICE AIRCRAFT | .1% PROOF | SHEAR | BEARING CIVIL AIRCRAFT | BEARING SERVICE AIRCRAFT | E $x10^{-6}$ | G $x10^{-6}$ | ELONG. % N |
|---|---|---|---|---|---|---|---|---|---|---|---|
| DHA. 67. | TITANIUM (COMMly.) ( PURE. ) | FOR GENERAL USE WHERE TITANIUM IS SPECIFIED FOR FITTINGS AT FIREWALLS AND OTHER DETAILS IN THE FIRE ZONE OF THE ENGINE BAY, GUN BLAST TUBES AND ALL MEDIUM AND LOW STRESSED PARTS WHERE TITANIUM IS TO BE SUBSTITUTED FOR STEEL - WELDABLE. (CORRESPONDS TO REM-CRU A.70 & Ti 75A). | 81,000 (36) | 76,000 (34) | 57,000 (25.5) | 52,000 | 123,000 | 123,000 | 15.5 | 6.5 | 18 |
| DHA. 90 | 4% Mn. 4% AL. TITANIUM ALLOY. | FOR GENERAL USE WHERE A MATERIAL HAVING HIGHER STRENGTH PROPERTIES THAN DHA.67 IS REQUIRED, ESPECIALLY IN THE INTERMEDIATE TEMPERATURE RANGE - NOT WELDABLE. (CORRESPONDS TO REM-CRU C130 AM, ICI 314A & HYLITE 40) | 139,000 (62) | 139,000 (62) | 128,000 (57) | 89,000 | 210,000 | 210,000 | 15.5 | 6.5 | 15 |
| | 5% AL. 2½% Sn. TITANIUM ALLOY. | FOR USE WHERE MAX. STRENGTH IS REQUIRED IN THE TEMPERATURE RANGE 370° - 600° C. DIFFICULT AND COSTLY TO WORK. NOT TO BE USED WITHOUT PRIOR CONSULTATION - WELDABLE. (CORRESPONDS TO REM-CRU A.110 AT.) | 120,000 (53.5) | 120,000 (53.5) | 110,000 (49) | 76,000 | 179,000 | 179,000 | 15.5 | 6.5 | 18 |
| | | SHEAR AND BEARING FIGURES ARE PROVISIONAL. | | | | | | | | | |

DESIGN DATA III/14A
SHEET NO.

| APPROVED | TRACED | COMPILED | ISSUE NO. | DATE |
|---|---|---|---|---|
| | | | 2 | July '56 |
| | | | 1 | Aug. '55 |

THE DE HAVILLAND AIRCRAFT COMPANY LTD., HATFIELD, HERTS.

FORGINGS, STAMPINGS–LIGHT ALLOY

| SPEC | MATERIAL | REMARKS | | MAX. PERMISSIBLE STRESS LBS/INS.$^2$ (TONS/INS.$^2$) TENSION CIVIL AIRCRAFT | TENSION SERVICE AIRCRAFT | YIELD | SHEAR | BEARING CIVIL AIRCRAFT | BEARING SERVICE AIRCRAFT | E $\times 10^{-6}$ | G $\times 10^{-6}$ | ELONG. % N |
|---|---|---|---|---|---|---|---|---|---|---|---|---|
| | | NOTES:<br>1. FOR ALL LIGHT ALLOY FORGINGS AND STAMPINGS THE GRAIN FLOW REQUIRED MUST BE INDICATED ON THE DRAWINGS. SEE SECTION 2. PARA. 1.<br>2. FOR DEFINITION OF CLASS 1 FORGINGS & DETAILS OF ISSUE SEE SECTION 2.<br>3. THE USE OF PRECIPITATION HEAT TREATED FORGINGS REQUIRES CAREFUL CONTROL DURING MACHINING OPERATIONS TO AVOID DISTORTION AND CRACKING DUE TO RELEASE OF LOCKED UP STRESSES.<br>WHERE THE METAL REMOVAL FROM ANY FACE TO BE DRILLED, BORED OR MACHINED, WILL EXCEED 12½% OF THE DEPTH OF THE CROSS SECTION WHICH IN ITSELF HAS A SECTIONAL DIMENSION | | 3. CONT.<br>GREATER THAN THAT STATED BELOW THEN THE FORGING MUST HAVE A SCHEME FOR PRE-HEAT TREATMENT MACHINING APPROVED BY THE DESIGNER IN CHARGE. THE DESIGNER IN CHARGE MUST CONSIDER ALSO, WHETHER IT IS DESIRABLE TO APPLY SHOT PEENING IN HIGHLY STRESSED AREAS.<br>D.O. PROCEDURE FOR 'PRE-HEAT TREATMENT MACHINING DRAWINGS' IS GIVEN IN SECTION II & PRODUCTION SHOP PROCEDURE IN DHA.84 'INSTRUCTION FOR DRAWING, DETAILING, PURCHASING & FABRICATING MEDIUM AND HIGH STRENGTH WROUGHT ALUMINIUM ALLOYS'.<br>4. WHERE A SINGLE LUG CONSTITUTES THE SOLE LOAD PATH ON A MAJOR STRUCTURAL COMPONENT A STEEL FORGING SHOULD BE USED IN PREFERENCE TO L.A. | | | | | | | | | |
| DTD. 423 | ALUMINIUM ALLOY | FORGINGS FOR GENERAL USE ALL CLASSES PARTICULARLY SMALL FORGINGS WHERE LOWER PROPERTIES ENTAIL ONLY SMALL WEIGHT PENALTY. PREFERRED, WHERE FATIGUE, NOT STATIC STRENGTH IS CRITERION, FOR LARGER FORGINGS WHERE MAX. SECTIONAL DIMENSION EXCEEDS 1" SEE NOTE 3. | Longitudinal Grain | 54,000 (24) | 54,000 (24) | 45,000 | 27,000 | 85,000 | 76,000 | 10.5 | 3.9 | 8 |
| | | | All Transverse Directions | 54,000 (24) | 54,000 (24) | 40,500 | | | | | | 6 |
| L.65 | ALUMINIUM ALLOY | USE FOR CLASS 1 & 2 FORGINGS ONLY WHERE PROPERTIES HIGHER THAN DTD.423 ARE ESSENTIAL.<br>WHERE MAX. SECTIONAL DIMENSION EXCEEDS ½" SEE NOTE 3. REPLACES DTD.364. | Longitudinal Grain | 65,000 (29) | 65,000 (29) | 56,000 | 38,000 | 96,000 | 85,000 | 10.5 | 3.9 | 6 |
| | | | All Transverse Directions | 58,000 (26) | 58,000 (26) | 52,000 | | | | | | 4 |
| DTD. 683 | ALUMINIUM ALLOY | USE FOR CLASS 1 & 2 FORGINGS ONLY WHERE PROPERTIES HIGHER THAN L.65 OR DTD.423 ARE ESSENTIAL.<br>WHERE MAX. SECTIONAL DIMENSION EXCEEDS ½". SEE NOTE 3. | Longitudinal Grain | 70,000 (31) | 70,000 (31) | 61,000 | 40,000 | 112,000 | 101,000 | 10.5 | 3.9 | 8 |
| | | | All Transverse Directions | 65,000 (29) | 65,000 (29) | 56,000 | | | | | | 4 |

DESIGN DATA SHEET NO. III/15A

| APPROVED | TRACED | COMPILED | ISSUE NO. | DATE |
|---|---|---|---|---|
| | | | 1 | July '56 |

THE DE HAVILLAND AIRCRAFT COMPANY LTD., HATFIELD, HERTS.

FORGINGS, STAMPINGS–LIGHT ALLOY

| SPEC | MATERIAL | REMARKS | | MAX. PERMISSIBLE STRESS LBS/INS.$^2$ (TONS/INS.$^2$) TENSION CIVIL AIRCRAFT | TENSION SERVICE AIRCRAFT | YIELD | SHEAR | BEARING CIVIL AIRCRAFT | BEARING SERVICE AIRCRAFT | E $x10^{-6}$ | G $x10^{-6}$ | ELONG. % N |
|---|---|---|---|---|---|---|---|---|---|---|---|---|
| DTD. 731 | ALUMINIUM ALLOY (R.R.58) | SUITABLE FOR USE AT ELEVATED TEMPERATURES DEPENDING ON THE STRESS INVOLVED. INFORMATION TO BE OBTAINED FROM THE STRESS OFFICE. WHERE MAX SECTIONAL DIMENSION EXCEEDS ½". SEE NOTE 3 on DATA SHT. III/15A | Longitudinal Grain | 60,500 (27) | 60,500 (27) | 47,000 (21) | 34,000 | 106,000 | 94,000 | | | 6 |
| | | | All Transverse Directions | 58,200 (26) | 58,200 (26) | 44,800 (20) | 32,900 | 101,000 | 89,500 | | | 4 |
| DHA. 83 | ALUMINIUM ALLOY (PLATE) | SPECIFICATION FOR HOT BENT PLATE TO MIN. RADIUS, OF ½T. USE WHERE TRANSVERSE GRAIN PROPERTIES AROUND ANGLE ARE IMPORTANT. DRAWINGS MUST FOLLOW FULL FORGING PROCEDURE | | INCLUDED IN DATA SHEET FOR REFERENCE PURPOSES ONLY. REFER TO SPEC. FOR FIGURES & MATERIALS COVERED BY THIS PROCESS. | | | | | | | | |
| DTD. 130 & DTD. 410 | ALUMINIUM ALLOY | SHOULD NOT BE CALLED UP FOR NEW DESIGN WORK. RETAINED FOR REFERENCE ONLY. | Longitudinal Grain | 57,000 (25.5) | 57,000 (25.5) | 47,000 | 33,500 | 108,000 | 96,000 | 10 | 4 | 6 |
| | | | All Transverse | 56,000 (25) | 56,000 (25) | 47,000 | | | | | | 4 |

DESIGN DATA SHEET NO. III/15B

| Issue No. | Date |
|---|---|
| 1 | AUG '55 |
| 2 | JULY '56 |

Compiled BAN.

Traced

Approved AWT.

THE DE HAVILLAND AIRCRAFT COMPANY LTD., HATFIELD, HERTS.

| SPEC. | MATERIAL | REMARKS | | MAX. PERMISSIBLE STRESS LBS/INS.$^2$ (TONS/INS.$^2$) TENSION, COMPRESSION OR BENDING CIVIL A/C | TENSION, COMPRESSION OR BENDING SERVICE A/C | SHEAR | BEARING CIVIL AIRCRAFT | BEARING SERVICE AIRCRAFT | E $\times 10^{-6}$ | G $\times 10^{-6}$ | ELONG. N % |
|---|---|---|---|---|---|---|---|---|---|---|---|
| B. S. 383 | BRONZE | SAND AND CHILLED CASTINGS FOR GENERAL PURPOSES. | CLASS 1 | 19,600 (8.75) | 19,600 (8.75) | | | | | | |
| | | | CLASS 2 & 3 | 23,500 (10.5) | 21,300 (9.5) | | | | | | |
| B. 8 | PHOSPHOR BRONZE | FOR BEARINGS AND SIMILAR. NOT SUITABLE FOR CAPSTAN OR AUTOMATIC LATHE WORK. AVAILABLE IN SHORT BARS. (12."0 LONG). | CLASS 1 | 21,300 (9.5) | 21,300 (9.5) | | | | | | 1.5 |
| | | | CLASS 2 & 3 | 24,600 (11) | 22,400 (10) | | | | | | |
| DTD. 412 | ALUMINIUM BRONZE | CENTRISPUN TUBULAR CASTINGS FOR LARGE BEARINGS OVER 1½" DIA. USE IN PREFERENCE TO SOLID BAR TO REDUCE COST | CLASS 1 | 39,900 (17.8) | 39,900 (17.8) | | | | | | 12 |
| | | | CLASS 2 & 3 | 53,700 (24) | 48,000 (21.4) | | | | | | 12 |
| | | | | | | | | | | | |
| DTD. 666 * | MEDIUM HIGH TENSILE STEEL | FOR USE IN PLACE OF MEDIUM STRESSED STEEL FORGINGS WHERE COMPLICITY OF DESIGN LENDS ITSELF MORE READILY TO CASTING TECHNIQUE, BUT ONLY AFTER DISCUSSION WITH METAL FOUNDERS TECHNICAL REPRESENTATIVE | CLASS 1 NOT CENTRISPUN. | 116,000 (52) | 116,000 (52) | 70,000 | 197,000 | 175,000 | | | 12 |
| | | | CLASS 2 AND CLASS 1 CENTRISPUN. | 134,000 (60) | 134,000 (60) | 81,000 | 227,000 | 201,000 | | | 12 |

* THE FOLLOWING NOTES MUST BE ADDED TO ALL DRAWINGS CALLING FOR DTD. 666.

1. THIS FITTING IS TO HAVE A DEGREE OF FINISH ALL OVER IN ACCORDANCE WITH A STANDARD SAMPLE APPROVED BY DESIGN DEPARTMENT AND RETAINED BY INSPECTION DEPARTMENT.
2. ALL SHARP EDGES INCLUDING THE INSIDE AND OUTSIDE OF BOLT AND PIN HOLES ETC. TO BE BLENDED DOWN WITH A SMALL RADIUS.
3. MAGNETIC CRACK TEST TO D. H. A. 324.

NOTE:
WHERE IT IS IMPRACTICABLE TO MACHINE ALL OVER, THE INACCESSIBLE SURFACE MAY BE GROUND OR ROTARY FILED TO THE STANDARD REQUIRED ON THE APPROVED SAMPLE, SUCH OPERATIONS BEING COVERED BY ADEQUATE DRAWING NOTES.

CASTINGS - BRONZE & STEEL.

DESIGN DATA SHEET NO. III/16A

| ISSUE NO. | DATE |
|---|---|
| 1 | AUG. '55 |

COMPILED

TRACED

APPROVED

# CASTINGS - CLASSIFICATION AND DESIGN STRESSES.

CLASS 1. A CLASS 1 CASTING IS DEFINED AS ONE WHICH IS USED IN SUCH A POSITION THAT A SINGLE FAILURE EITHER IN FLIGHT, LANDING OR TAKE-OFF MIGHT BE THE DIRECT CAUSE OF STRUCTURAL COLLAPSE, LOSS OF CONTROL, FAILURE OF MOTIVE POWER ON UNINTENTIONAL RELEASE OF BOMBS. CAST WHEELS FOR BEACHING CHASSIS ARE ALSO TO BE CONSIDERED AS CLASS 1 (IF THE FAILURE WOULD ONLY LEAD TO DANGER THROUGH A SECOND UNLIKELY EVENT SUCH AS A BROKEN AERIAL MAST JAMMING THE TAIL UNIT CONTROLS, THE CASTING IS NOT WITHIN THE DEFINITION OF CLASS 1.)

CLASS 2. A CLASS 2 CASTING IS DEFINED AS A STRESSED CASTING USED IN SUCH A POSITION THAT A SINGLE FAILURE EITHER IN FLIGHT, LANDING, OR TAKE-OFF WILL NOT CAUSE STRUCTURAL COLLAPSE, LOSS OF CONTROL, FAILURE OF MOTIVE POWER, OR UNINTENTIONAL RELEASE OF BOMBS.

CLASS 3. A CLASS 3 CASTING IS DEFINED AS ONE WHOSE STRENGTH DOES NOT CONTRIBUTE TO THE STRENGTH OF THE PRIMARY STRUCTURE OR CONTROL SYSTEM.

## RADIOLOGICAL EXAMINATION AND FOUNDRY INSPECTION.

CLASS 1 AND CLASS 2 CASTINGS WILL BE RADIOLOGICALLY EXAMINED, CLASS 3 CASTINGS WILL NOT BE RADIOLOGICALLY EXAMINED.
THE FOLLOWING NOTE MUST BE ADDED TO ALL DRAWINGS OF CLASS 1 AND CLASS 2 CASTINGS VIZ:

'RADIOLOGICAL CATEGORY.....

RADIOLOGY TO BE IN ACCORDANCE WITH APPROVED TECHNIQUE NO.....

(THE APPROVED TECHNIQUE NO. IS SUPPLIED BY THE A.I.D. ON RECEIPT OF MARKED UP PRINT SHOWING THE STRESSED AREA.)

} SERVICE AIRCRAFT

NO RADIOLOGICAL CATEGORY OR TECHNIQUE ARE REQUIRED BUT THE FOLLOWING NOTE MUST BE PUT ON ALL DRAWINGS OF CLASS 1 AND CLASS 2 CASTINGS VIZ:-

'FOUNDRY INSPECTION TO BE TO A.R.B. REQUIREMENTS.'

} CIVIL AIRCRAFT

THE FOLLOWING PERMISSIBLE STRESSES FOR CLASS 1, 2 & 3 CASTINGS ENSURES THAT PROOF AND ULTIMATE CONDITIONS ARE COMPLIED WITH. THE STRESSES MUST BE USED IN CONJUNCTION WITH NORMAL FULLY FACTORED LOADS AND NO CASTING FACTOR IS TO BE INCLUDED.

| APPROVED | TRACED | COMPILED | ISSUE NO. | DATE |
|---|---|---|---|---|
| | | | 2 | Aug.'55 |
| | | | 3 | July'56 |

CASTINGS - LIGHT ALLOY.

| SPEC. | MATERIAL | REMARKS | | MAX. PERMISSIBLE STRESS LBS/INS.$^2$ (TONS/INS.$^2$) TENSION OR BENDING CIVIL A/C | TENSION OR BENDING SERVICE A/C | SHEAR | BEARING CIVIL AIRCRAFT | BEARING SERVICE AIRCRAFT | E $\times 10^{-6}$ | G $\times 10^{-6}$ | ELONG. % N |
|---|---|---|---|---|---|---|---|---|---|---|---|
| DTD. 298 | ALUMINIUM COPPER ALLOY | USE FOR STRUCTURAL PARTS. SINGLE HEAT TREATED MATERIAL. MORE GENERALLY USED THAN DTD.304 | CLASS 1 | 20,800 (9.3) | 20,800 (9.3) | 14,100 | 45,000 | 45,000 | 10 | 3.5 | 7 |
| | | | CLASS 2 & 3 | 31,500 (14) | 31,500 (14) | 21,500 | 45,000 | 45,000 | 10 | 3.5 | 7 |
| DTD. 304 | ALUMINIUM COPPER ALLOY | USE FOR STRUCTURAL PARTS SAME MATERIAL AS DTD.298 BUT HAS DOUBLE HEAT TREATMENT. USE ONLY WHEN BEST POSSIBLE STRENGTH FIGURES ARE REQUIRED. | CLASS 1 | 27,000 (12) | 27,000 (12) | 18,700 | 56,000 | 56,000 | 10 | 3.5 | 4 |
| | | | CLASS 2 & 3 | 40.000 (18) | 40,000 (18) | 28,000 | 56,000 | 56,000 | 10 | 3.5 | 4 |
| DTD. 735 | ALUMINIUM SILICON MAGNESIUM ALLOY | FOR NON-STRUCTURAL LOW STRESS COMPONENTS, HAS GOOD MACHINING & THREAD CUTTING PROPERTIES & IS GENERALLY NON-POROUS. WELDABLE TO L.59 SHEET, L.56 & DHA.63 TUBE & SELF | TO BE ANODISED: CLASS 1 | 22,400 (10) | 22,400 (10) | | | | 10 | 3.5 | |
| | | | TO BE ANODISED: CLASS 2 & 3 | 33,600 (15) | 33,600 (15) | | | | 10 | 3.5 | |
| | | | WELDED | | | | | | | | |
| L.35 | ALUMINIUM COPPER ALLOY | 'Y' ALLOY. SUITABLE FOR COMPONENTS WORKING AT ELEVATED TEMPERATURES UP TO 300° C. LOWER STRENGTH FIGURES MUST BE USED AT HIGHER TEMPERATURES. | CLASS 1 | 20,800 (9.3) | 20,800 (9.3) | 14,100 | 45,000 | 45,000 | 10 | 3.5 | 7 |
| | | | CLASS 2 & 3 | 31,500 (14) | 31,500 (14) | 21,500 | 45,000 | 45,000 | 10 | 3.5 | 7 |

DESIGN DATA III/17B
SHEET NO.

THE DE HAVILLAND AIRCRAFT COMPANY LTD., HATFIELD, HERTS.

| Issue No. | Date |
|---|---|
| 1 | AUG '55 |
| 2 | JULY '56 |

Compiled BJN

Traced

Approved A.J.T.

# THE DE HAVILLAND AIRCRAFT COMPANY LTD., HATFIELD, HERTS.

CASTINGS – LIGHT ALLOY

| SPEC. | MATERIAL | REMARKS | | | MAX. PERMISSIBLE STRESS LBS/INS.$^2$ (TONS/INS.$^2$) TENSION OR BENDING CIVIL A/C | TENSION OR BENDING SERVICE A/C | SHEAR | BEARING CIVIL AIRCRAFT | BEARING SERVICE AIRCRAFT | E $\times 10^{-6}$ | G $\times 10^{-6}$ | ELONG. N % |
|---|---|---|---|---|---|---|---|---|---|---|---|---|
| DTD. 424 | ALUMINIUM ALLOY | RETAINED FOR REFERENCE ONLY NOT TO BE USED ON NEW DESIGN | | CLASS 1 | 13,400 (6) | 13,400 (6) | 7,200 | 22,500 | 22,500 | | | |
| | | | | CLASS 2 & 3 | 16,800 (7.5) | 14,500 (6.5) | 11,200 | 22,500 | 22,500 | | | |
| L.33 | SILICON ALUMINIUM ALLOY | RETAINED FOR REFERENCE ONLY NOT TO BE USED ON NEW DESIGN | TO BE ANODISED | CLASS 1 | 9,900 (4.4) | 9,900 (4.4) | 6,700 | 20,200 | 20,200 | 10 | 3.5 | 5 |
| | | | | CLASS 2 & 3 | 11,800 (5.25) | 10,500 (4.7) | 10,100 | 20,200 | 20,200 | 10 | 3.5 | 5 |
| DTD. 245 | SILICON ALUMINIUM ALLOY | RETAINED FOR REFERENCE ONLY NOT TO BE USED ON NEW DESIGN | | CLASS 1 | 23,000 (10.3) | 23,000 (10.3) | 15,700 | 49,000 | 49,000 | 10 | 3.5 | 5 |
| | | | | CLASS 2 & 3 | 34,500 (15.5) | 34,500 (15.5) | 23,500 | 49,000 | 49,000 | 10 | 3.5 | 5 |
| | | | | WELDED | 12,500 (5.6) | 12,500 (5.6) | 7,400 | 22,500 | 22,500 | 10 | 3.5 | 5 |
| L.53 | ALUMINIUM MAGNESIUM ALLOY | RETAINED FOR REFERENCE ONLY NOT TO BE USED ON NEW DESIGN REPLACES D.T.D.300 | | CLASS 1 | 27,000 (12) | 27,000 (12) | 17,500 | 56,000 | 56,000 | 10 | 3.5 | 8 |
| | | | | CLASS 2 & 3 | 33,500 (15) | 30,000 (13.3) | 23,500 | 56,000 | 56,000 | 10 | 3.5 | 8 |

DESIGN DATA SHEET NO. III/17C

THE DE HAVILLAND AIRCRAFT COMPANY LTD., HATFIELD, HERTS.

| ISSUE NO. | DATE |
|---|---|
| 1 | AUG. 55 |

COMPILED: BAK

TRACED:

APPROVED: Ans.

| SPEC. | MATERIAL | REMARKS | | MAX. PERMISSIBLE STRESS LBS/INS.$^2$ (TONS/INS.$^2$) TENSION, COMPRESSION OR BENDING CIVIL A/C | TENSION, COMPRESSION OR BENDING SERVICE A/C | SHEAR | BEARING CIVIL AIRCRAFT | BEARING SERVICE AIRCRAFT | E $\times 10^{-6}$ | G $\times 10^{-6}$ | ELONG. N % |
|---|---|---|---|---|---|---|---|---|---|---|---|
| L. 121 | MAGNESIUM ALLOY. NO HEAT TREATMENT | SUITABLE FOR LIGHTLY STRESSED CASTINGS. REPLACES DTD. 59 | CLASS 1 | 12,500 (5.6) | 12,500 (5.6) | 7,400 | 22,500 | 22,500 | 6.5 | 2.4 | 6 |
| | | | CLASS 2 & 3 | 15,100 (6.75) | 13,400 (6) | 11,200 | 22,500 | 22,500 | 6.5 | 2.4 | 6 |
| L. 122 | MAGNESIUM ALLOY | L. 121 HEAT TREATED. WILL ACHIEVE HIGHER TENSILES ON TEST MORE SUITABLE FOR PARTS REQUIRING GOOD ELONGATION (VIBRATION, FLUCTUATING LOADS ETC.) LIABLE TO DISTORTION BY HEAT TREATMENT. REPLACES DTD. 289 | CLASS 1 | 12,500 (5.6) | 12,500 (5.6) | 7,400 | 22,500 | 22,500 | 6.5 | 2.4 | 6 |
| | | | CLASS 2 & 3 | 15,100 (6.75) | 13,400 (6) | 11,200 | 22,500 | 22,500 | 6.5 | 2.4 | 6 |
| DTD. 728 | MAGNESIUM CERIUM ZINC ZIRCONIUM ALLOY | RESISTANT TO CREEP AT TEMPERATURES UP TO 200°C, OR UNDER LIGHT STRESSES UP TO 250°C. ALSO USEFUL FOR APPLICATIONS SUBJECT TO HIGH FLUID PRESSURES. REPLACES M. C. Z. | CLASS 1 | 13,400 (6) | 13,400 (6) | | | | 6.5 | 2.5 | 3 |
| | | | CLASS 2 & 3 | 18,600 (8.3) | 16,400 (7.3) | | | | 6.5 | 2.5 | 3 |
| DTD. 708 | MAGNESIUM CERIUM ZINC ZIRCONIUM ALLOY | SIMILAR TO DTD. 728 BUT PREFERRED BY MANY FOUNDERS FOR CASTINGS WITH ABRUPT CHANGES OF SECTION. REPLACES Z. R. E. 1 | CLASS 1 | 13,400 (6) | 13,400 (6) | | | | 6.5 | 2.5 | 3 |
| | | | CLASS 2 & 3 | 18,600 (8.3) | 16,400 (7.3) | | | | 6.5 | 2.5 | 3 |
| DTD. 721 | MAGNESIUM ZINC ZIRCONIUM ALLOY | SUITABLE FOR HIGHER STRESSES BUT HAVING LOW DUCTILITY MUST NOT BE USED UNDER CONDITION OF SHOCK LOAD. PRESENTS DIFFICULTIES FOR LARGE, THIN SECTION CASTINGS. MUST NOT BE WELDED. REPLACES HEAT-TREATED Z. 5. Z. | CLASS 1 | 21,500 (9.5) | 21,500 (9.5) | | | | 6.5 | 2.5 | 5 |
| | | | CLASS 2 & 3 | 28,500 (12.7) | 25,500 (11.3) | | | | 6.5 | 2.5 | 5 |
| DTD. 748 | MAGNESIUM CERIUM ZINC ZIRCONIUM ALLOY | VARIANT OF DTD. 721 SUITABLE FOR LARGE, THIN CASTINGS. MAY BE WELDED BY ARGON-ARC PROCESS. THE HEAT TREATMENT GIVES MAXIMUM FREEDOM FROM STRESS AND DISTORTION. REPLACES R. Z. 5 | CLASS 1 | 19,500 (8.7) | 19,500 (8.7) | | | | 6.5 | 2.5 | 3 |
| | | | CLASS 2 & 3 | 27,000 (12) | 24,000 (10.7) | | | | 6.5 | 2.5 | 3 |

NOTE: DRAWINGS OF MAGNESIUM ALLOY CASTINGS MUST BEAR A NOTE STATING 'ALL CORNERS AND EDGES TO BE RADIUSED'.
THIS IMPORTANT TO OBTAIN CONTINUITY OF PROTECTIVE TREATMENT AND REDUCE LOCAL DAMAGE BY HANDLING. (SEE SECTION 2 DESIGN NOTE 3).
THE MATERIALS LISTED ABOVE MUST NOT BE ANODISED - CHROMATE TREATMENT REQUIRED.

ZIRCONIUM ALLOY CASTINGS MUST BE STRENGTH TESTED FOR ALL CLASS 1 APPLICATIONS.
NONE MUST BE USED UNDER CONDITIONS OF SHOCK LOAD.

COIL SPRING OF CIRCULAR SECTION

BASIC FORMULAE

The stress in a spring may be expressed as follows

$$q = \frac{8.P.D.}{\pi d3} K, \quad \text{where } K = \frac{C + 0.2}{C - 1} \text{ is a correction factor}$$

P = axial load, D = mean coil diameter, d = wire gauge diameter.
C = spring index D/d, q = torsional shear stress lb/sq.in.

The stiffness of a spring.

$$S = \frac{G.d4}{8.n.D3} \quad \text{where S = Spring rate lbs. per inch}$$

G = modulus of rigidity (11,500,000 lbs/sq.in for steel wire)
n = number of effective coils

Use of Nomograms.

The nomograms on Data sheets III/21 & III/22 are a means for initially obtaining suitable dimensions, but the formulae given above should be used as a final check on the finished dimensions of the spring. The following example illustrates the method of using the nomograms when designing a compression spring.

Example. A spring is required which will exert 100 lbs. after being compressed 1.875" from an initial position in which it exerted 25 lbs. The spring rate will therefore be 40 lbs. per inch over this 1.875" working range.

Assume that for the purposes of this example the diameter of the coils must be $1\frac{1}{2}$".

As a first approximation assume the gauge of the wire to be 5 S.W.G. (=.212").

Calculate C = 1.5/.212 = 7.08

Then on the nomogram for stress (III/21) draw a line from P = 100 lbs. to C = 7.1. This intersects the vertical reference line at O.

Draw a second line from d = .212 to join O, producing it to cut the stress line q, in this case at 48,000 lbs/sq.in.

From the curve of permissible stresses (III/23) it will be seen that this stress figure is well within safe limits.

The nomogram for stiffness (III/22) is used similarly. Join C = 7.1 to d = .212 to cut the reference line at O'.

Draw a second line from S = 40 to O' producing it to cut the scale of effective coils in this case at 22.

Both the results q & s should now be checked in the basic formulae.

| ISSUE No | DATE |
|---|---|
| 1. | |
| | |
| | |
| | |
| | |
| | |
| | |
| COMPILED | |
| | |
| TRACED | |
| GARNET & Co 21 - 4 - 47 | |
| APPROVED | |

THE DE HAVILLAND AIRCRAFT CO. LTD.

D.O.I. No. 10338.

Date. 2-5-50.

# DRAWING OFFICE INSTRUCTIONS.

Type of Machine GENERAL INSTRUCTION: ALL A/C TYPES

Subject. MATERIALS FOR COIL SPRINGS

DISTRIBUTION: AS SPECIAL LIST

TO ASSIST SPRING MANUFACTURERS TO USE STOCKS OF SPRING MATERIALS TO THE BEST ADVANTAGE THE FOLLOWING ARRANGEMENT HAS BEEN MADE WHEN CALLING FOR CIRCULAR SECTION COIL SPRINGS ON NEW DRAWINGS.

(a) DRAWINGS FOR SPRINGS OF PRIMARY IMPORTANCE WILL CALL UP MATERIAL TO D.T.D. 5 AND ONLY THIS MATERIAL WILL BE USED UNLESS A WRITTEN CONCESSION IS OBTAINED.

(b) DRAWINGS FOR LESS IMPORTANT AND SMALLER SPRINGS FOR GENERAL USE WILL CALL UP MATERIAL TO D.T.D. 215 AND IN SUCH CASES THE MANUFACTURER MAY USE D.T.D. 215, D.T.D. 239 OR D.T.D. 5 PROVIDING THE DRAWING REQUIREMENTS FOR RATE, FREE AND COMPRESSED LENGTHS, ETC, ARE MET.

(c) FOR RETROSPECTIVE ACTION ANY SPRING DRAWING CALLING FOR D.T.D. 215 ALONE, OR AS AN ALTERNATIVE, WILL BE TREATED AS (b) ABOVE.

(d) ANY SPRING DRAWING CALLING FOR D.T.D. 5, OR D.T.D. 5 AND D.T.D. 239 AS ALTERNATIVE, WILL BE TREATED AS (a) ABOVE.

(e) ANY SPRING DRAWING CALLING FOR D.T.D. 239 MUST BE MADE FROM D.T.D. 5 OR BE SUBMITTED TO THE D.O. FOR RE-CLASSIFICATION.

Compiled by D.L. BYGRAVE. Approved by

INITIALLED

# THE DE HAVILLAND AIRCRAFT COMPANY LTD. HATFIELD, HERTS.

GENERAL NOTES

All coil spring drawings must quote

(i) Cadmium and De-brittle to Spec. DHA/331.

(ii) The free length and the compressed or extended length of the spring.

(iii) The Rates of the spring; viz. Rate ..... lb. per inch ± ..... %
The limits should not be set too close or they will involve wastage; ±4% is considered to be a close limit and variations of ±10% should be allowed if possible.

If there are no limitations to the overall dimensions, the choice of a spring index figure C about 6 is best. It should not exceed the limits of 3.5 - 8 or the spring will become awkward to manufacture.

The total number of coils is taken as the number of effective coils plus $1\frac{1}{2}$ for ~~wire~~ spring diameters over $\frac{1}{2}$", or plus 2 for diameters $\frac{1}{2}$" and smaller.

For coil springs under no real stressed condition, commercial quality material can be used.

For Commercial Quality coil springs neither rate nor material specification should be quoted, but the following note must be added:- "This spring must conform to dimensions given and must be of good quality material".

Where very important and highly stressed springs are required reference should be made to the book 'Armaments Design, Spring Data Sheets' and to The de Havilland Engine Company's Spring Data Sheets, both of which are held by the D.O. Standards Section.

| GROUP | SPEC | MATERIAL | REMARKS |
|---|---|---|---|
| COIL SPRINGS | D.T.D. 5A. | HARD DRAWN CARBON STEEL WIRE | HIGH DUTY SPRINGS, ALSO FOR SPRINGS SUBJECT TO HEAT, i.e., VALVE SPRINGS. HEAT TREATMENT IS "BLUED AT A TEMPERATURE OF NOT LESS THAN 200° C. OR MORE THAN 375° C. |
| | D.T.D. 215. | HIGH TENSILE STEEL WIRE | FOR SPRINGS UP TO AND INCLUDING 16 S.W.G. WIRE, CIRCLIPS, AND RETAINING RINGS OF CIRCULAR CROSS SECTION. (i.e. 16, 18, 20, etc.) |
| | D.T.D. 239A. | STEEL WIRE FOR SPRINGS | FOR RECTANGULAR-SECTION SPRINGS AND CIRCULAR CROSS SECTION SPRINGS OF 16 S.W.G. AND OVER (i.e. 14, 12, 10, etc.) |
| | D.T.D. 115 | SILICO MANGANESE STEEL BAR. | FOR SPRINGS MADE FROM WIRE LARGER THAN $\frac{1}{4}$" DIA. AND WHERE THE DESIGN NECESSITATES LOOPED OR BENT ENDS, IN WHICH CASE, THIS MATERIAL IS PREFERABLE TO D.T.D. 239.A. |
| | STA. 2d. | SILICO CHROMIUM STEEL | IMPORTANT U/C SPRINGS MADE FROM THIS MATERIAL HAVE BEEN USED IN THE PAST. THERE IS NO D.T.D. EQUIVALENT SPECIFICATION FOR THIS MATERIAL BUT D.T.D. 5 A. CAN BE USED AS AN ALTERNATIVE. |
| FLAT PLATE SPRINGS | D.T.D 187. | SPRING STEEL STRIP (NON-STAINLESS) | FOR GENERAL USE - MINIMUM BEND RADIUS 5T. "TO BE HARDENED AND TEMPERED" MUST BE QUOTED ON DRAWING. |
| | D.T.D. 271. | SPRING STEEL STRIP. (STAINLESS) | FOR GENERAL USE - MINIMUM BEND RADIUS 5 T. "TO BE HARDENED AND TEMPERED" MUST BE QUOTED ON DRAWING. |

| ISSUE No | DATE |
|---|---|
| 1 | |

COMPILED

TRACED

GARNET & Co 21 - 4 - 47

APPROVED

SPRINGS

DESIGN DATA SHEET No III/20

THE DE HAVILLAND AIRCRAFT COMPANY LIMITED. HATFIELD. HERTS.

NOMOGRAM FOR STRESS

$$q = \frac{8PD}{\pi d^3} K$$

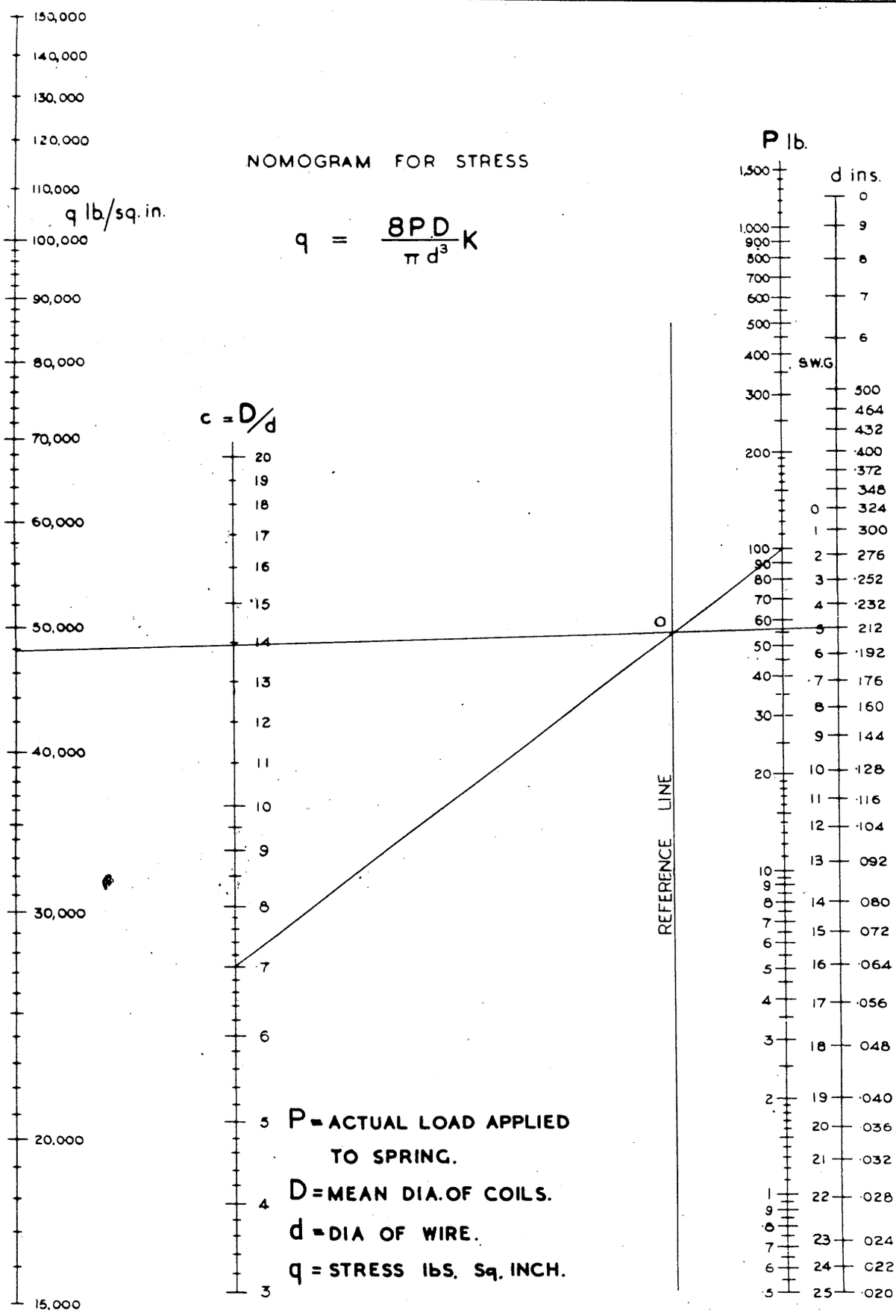


P = ACTUAL LOAD APPLIED TO SPRING.

D = MEAN DIA. OF COILS.

d = DIA OF WIRE.

q = STRESS lbs. Sq. INCH.

106.

| ISSUE No. | DATE |
|---|---|
| 1. | |
| | |
| | |
| | |
| | |
| | |

COMPILED

TRACED

APPROVED

R.H.J.H.

# NOMOGRAM FOR STRESS.

DESIGN DATA III

SHEET No 21

THE DE HAVILLAND AIRCRAFT COMPANY LIMITED. HATFIELD. HERTS.

NOMOGRAM FOR STIFFNESS

$$S = \frac{11 \cdot 5 \times 10^6 \times d^4}{8n \times D^3}$$

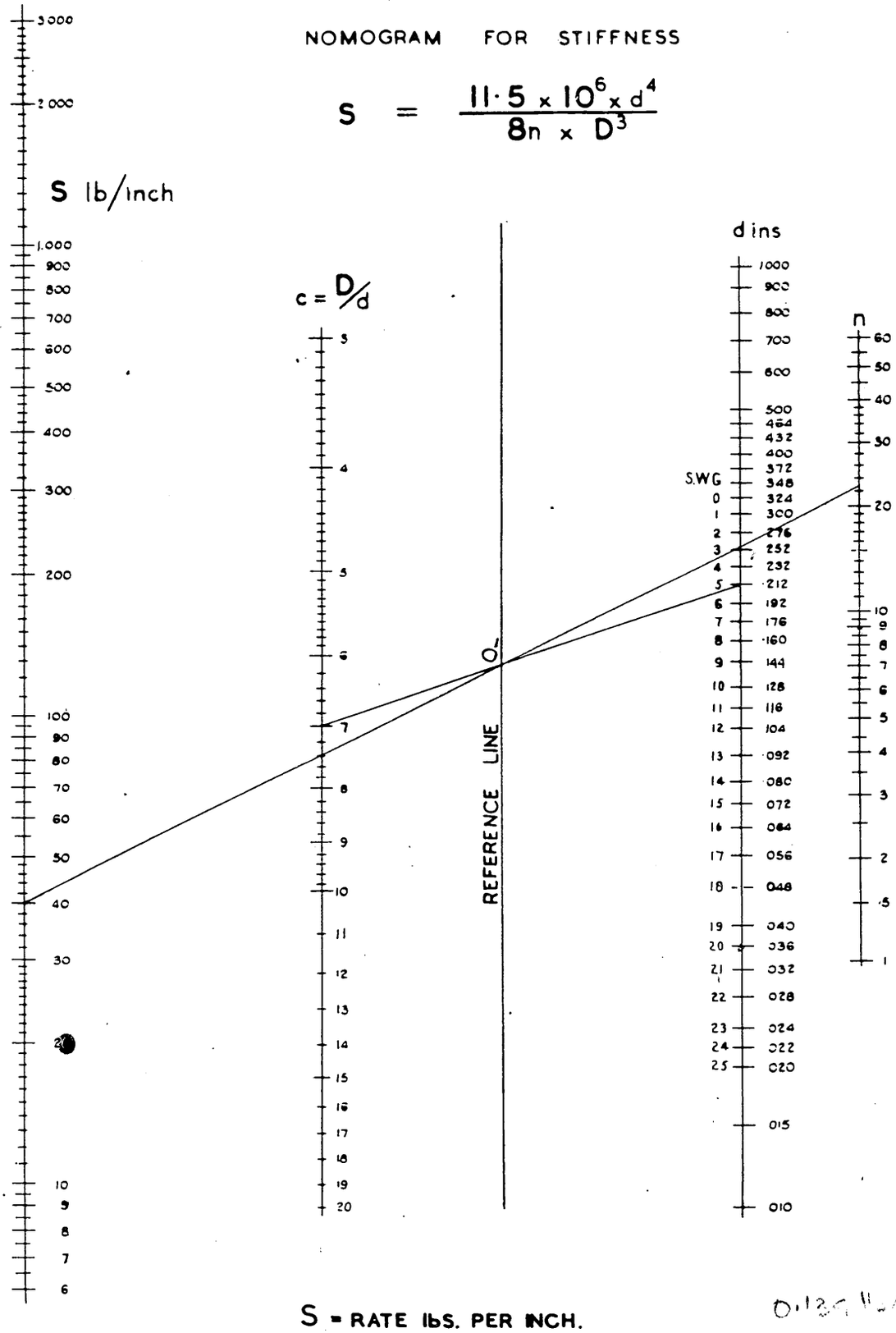


S = RATE lbs. PER INCH.
D = MEAN DIA. OF COILS.
d = DIA OF WIRE.
n = NUMBER OF EFFECTIVE COILS.

0.139 lb/in

| ISSUE Nº | DATE |
|---|---|
| 1 | |
| | |
| | |
| | |
| | |
| | |

COMPILED

TRACED

APPROVED
Q.H.J.H.

NOMOGRAM FOR STIFFNESS.

DESIGN DATA III
SHEET No. 22

THE DE HAVILLAND AIRCRAFT COMPANY LTD. HATFIELD, HERTS.

## MAXIMUM & NORMAL WORKING STRESS FOR STEEL SPRINGS.

(Corrected for Curvature by Wahl Factor)

THE MAXIMUM ALLOWABLE STRESS CURVE REPRESENTS THE EXTREME LIMIT OF SPRING STRESS. WHEREVER POSSIBLE SPRINGS SHOULD BE DESIGNED SO THAT STRESS IN THEM DOES NOT EXCEED "THE WORKING STRESS CURVE."

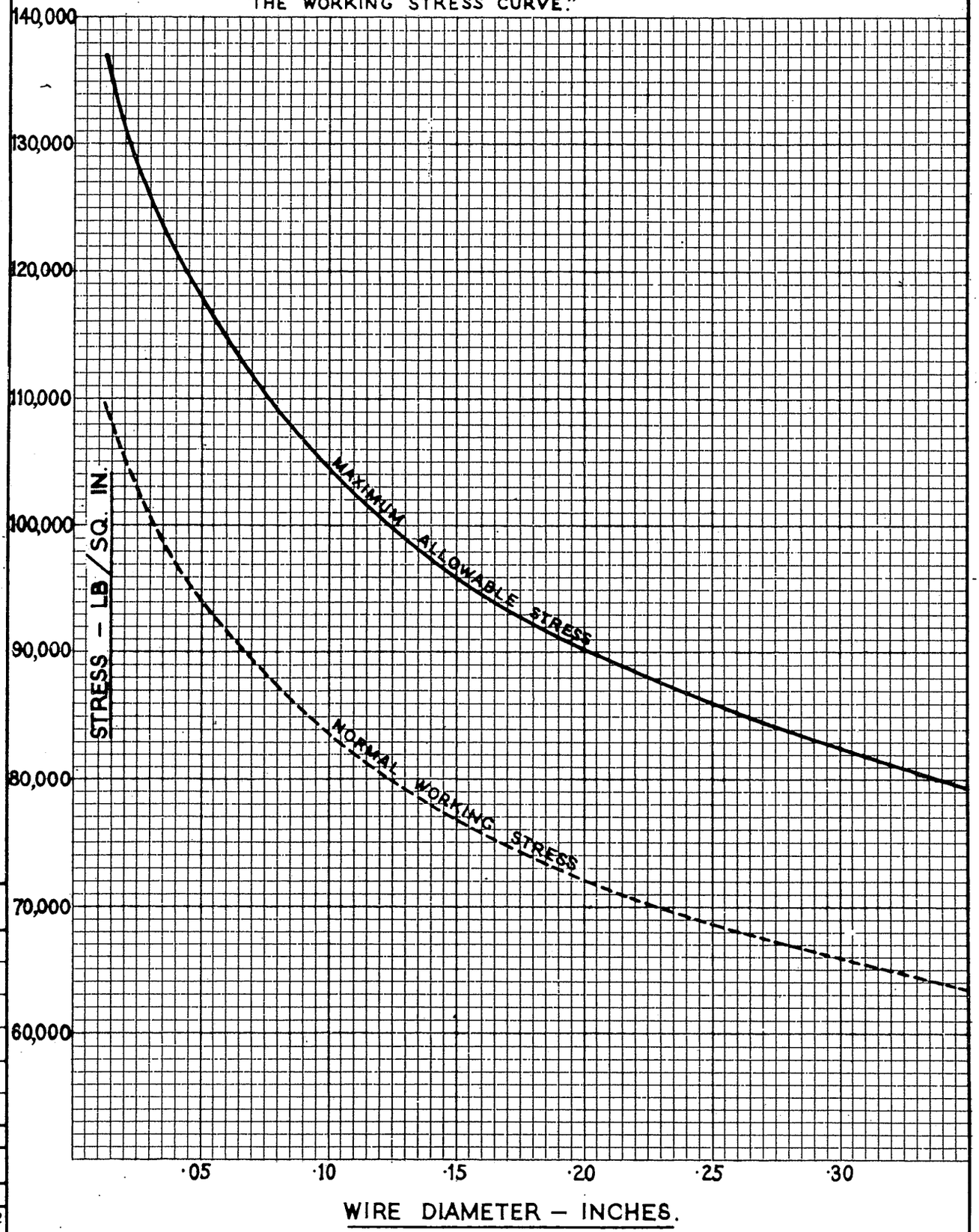


| ISSUE Nº | DATE |
|---|---|
| 1 | . |
| | |
| | |
| | |
| | |
| | |

COMPILED
J. STRONG.
TRACED
GARNET & Co
9 - 5 - 47
APPROVED
R.H.J.H.

SPRINGS – PERMISSIBLE STRESS

DESIGN OFFICE III
DATA SHEET Nº /23

## INTRODUCTION.

AN ANALYSIS HAS BEEN MADE OF LUG RESEARCH AND ad hoc TESTS, AND THE FOLLOWING EMPIRICAL EXPRESSIONS DERIVED.

THE EXPRESSIONS DO NOT GIVE AN ANALYSIS OF THE STRESSES OCCURRING, BUT ARE ESSENTIALLY INTENDED TO BE A SET WHICH TOGETHER WILL ACCURATELY PREDICT THE STRENGTH OF A REASONABLE SIZE LUG.

## METHOD

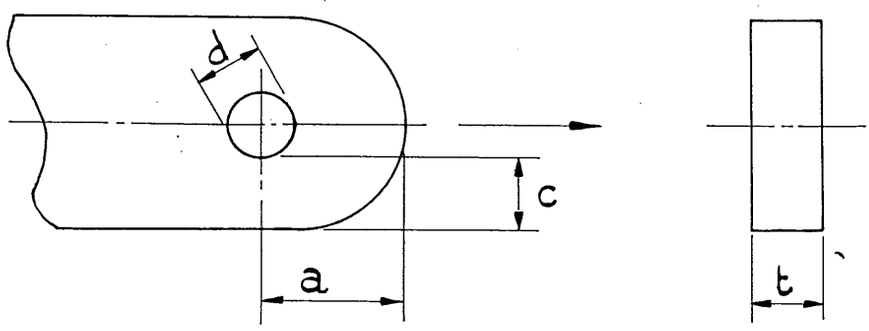


### ESTIMATED STRENGTH

| | | |
|---|---|---|
| TENSION | = | $1.8\ ct\ f_t$ |
| SHEAR OUT | = | $1.5\ at\ f_s$ |
| BEARING | = | $dt\ f_b$ |

WHERE $f_t$, $f_s$ & $f_b$ ARE THE FIGURES FOR TENSION, SHEAR AND BEARING RESPECTIVELY AS GIVEN IN SECTION III OF THE D.O. HANDBOOK.

THE EXPRESSIONS BECOME MODIFIED UNDER THE FOLLOWING CONDITIONS.

1. WHERE THE LUG IS ASYMMETRICAL ACCEPT 'a' & 'c' AT THE LESSER VALUES.
2. WHERE THE LUG IS SUBJECT TO HEAVY REVERSE LOADING, HEAVY VIBRATION, AND/OR WEAR ACTION E.G. UNDERCARRIAGES, NOSE OR TAIL WHEELS, MAIN JOINTS AND PARTS OF CONTROL SYSTEMS, REFER TO THE STRESS OFFICE FOR REQUIRED BEARING FACTORS.
3. AN ESTIMATED R.F. OF 1.1 TO 1.2 SHOULD BE ACHIEVED FOR LUGS ON L.A. FORGINGS IN ORDER TO COVER EFFECTS OF LOW ELONGATION AND GRAIN FLOW.
4. WHERE THE LUG CONSTITUTES THE SOLE LOAD PATH IN PRIMARY STRUCTURE, REFER TO THE STRESS OFFICE FOR REQUIRED FACTORS.

THIS INFORMATION IS TAKEN FROM STRESS OFFICE DATA SHEET NO. 02.01 AND SHOULD BE USED FOR ALL STRENGTH OF LUG CALCULATIONS.

| Issue No. | Date |
|---|---|
| 2 | AUG.'55 |

Compiled. BAN

Traced.

Approved. AWT.

THE DE HAVILLAND AIRCRAFT COMPANY, LTD., HATFIELD, HERTS.

## VALUES FOR ROUND BARS

| DIA. | AREA A | MOMENT OF INERTIA I | RADIUS OF GYRATION K | MODULUS OF SECTION Z |
|---|---|---|---|---|
| | | | | 2 B.A. |
| 1/4" | ·0491 | ·0001917 | ·0625 | ·001534 |
| 5/16" | ·0767 | ·000467 | ·0783 | ·00299 |
| 3/8" | ·1105 | ·0009707 | ·0940 | ·005177 |
| 7/16" | ·1503 | ·0018 | ·1094 | ·00827 |
| 1/2" | ·1964 | ·003068 | ·125 | ·01227 |
| 9/16" | ·2485 | ·00498 | ·1408 | ·01745 |
| 5/8" | ·3068 | ·00749 | ·1563 | ·02397 |
| 11/16 | ·3712 | ·01103 | ·1718 | ·0320 |
| 3/4" | ·4418 | ·01553 | ·1873 | ·04142 |
| 13/16" | ·5185 | ·02145 | ·2035 | ·0530 |
| 7/8" | ·6013 | ·02877 | ·2188 | ·06577 |
| 15/16" | ·6903 | ·03820 | ·2343 | ·0817 |
| 1" | ·7854 | ·04909 | ·25 | ·09817 |
| 1 1/16" | ·8866 | ·0630 | ·266 | ·1170 |
| 1 1/8" | ·9940 | ·07863 | ·2813 | ·13988 |
| 1 3/16" | 1·1075 | ·0985 | ·2970 | ·1658 |
| 1 1/4" | 1·2272 | ·1198 | ·3126 | ·1917 |
| 1 5/16" | 1·3530 | ·1463 | ·3280 | ·2215 |
| 1 3/8" | 1·4849 | ·1755 | ·3438 | ·2552 |
| 1 7/16" | 1·6230 | ·2130 | ·3600 | ·2940 |
| 1 1/2" | 1·7671 | ·2485 | ·3750 | ·3313 |
| 1 9/16" | 1·9175 | ·2950 | ·3910 | ·3738 |
| 1 5/8" | 2·0739 | ·3431 | ·4063 | ·4213 |
| 1 11/16" | 2·2565 | ·4020 | ·4220 | ·4750 |
| 1 3/4" | 2·4035 | ·4604 | ·4376 | ·5261 |
| 1 13/16" | 2·5802 | ·5325 | ·4530 | ·5830 |
| 1 7/8" | 2·7618 | ·6067 | ·4688 | ·6471 |
| 1 15/16" | 2·9483 | ·6950 | ·4850 | ·718 |
| 2" | 3·1416 | ·7854 | ·5 | ·7854 |
| 2 1/16" | 3·3410 | ·8950 | ·5150 | ·86 |
| 2 1/8" | 3·5466 | 1·001 | ·5300 | ·9421 |
| 2 3/16" | 3·7583 | 1·120 | ·5470 | 1·055 |
| 2 1/4" | 3·9761 | 1·258 | ·5626 | 1·118 |
| 2 5/16" | 4·2000 | 1·408 | ·5770 | 1·219 |
| 2 3/8" | 4·4301 | 1·562 | ·5940 | 1·315 |
| 2 7/16" | 4·6664 | 1·730 | ·6100 | 1·430 |
| 2 1/2" | 4·9087 | 1·917 | ·6252 | 1·534 |

| ISSUE No | DATE |
|---|---|
| 1 | |
| 2 | JUNE '49 |
| 3 | AUG. '55 |
| | |
| | |
| | |

COMPILED
L. SPENCER

TRACED
GARNET & Co
2 - 4 - 47

APPROVED

PROPERTIES OF ROUND BARS

DRAWING OFFICE III
DATA SHEET No 31

# THE DE HAVILLAND AIRCRAFT COMPANY LTD., HATFIELD, HERTS.

W = WEIGHT PER FOOT RUN IN LBS OF STEEL TUBES.
W × ·356 = WEIGHT PER FOOT RUN IN LBS OF LIGHT ALLOY TUBES.
A = AREA IN INS.$^2$
I = MOMENT OF INERTIA INS.$^4$ (BENDING.)
Z = MODULUS OF SECTION INS.$^3$ (BENDING.)
K = RADIUS OF GYRATION INS.

| DIA. | | 3/16" | 1/4" | 5/16" | 3/8" | 7/16" | 1/2" | 9/16" | 5/8" | 11/16" | 3/4" | 13/16" | 7/8" | 15/16" | 1" |
|---|---|---|---|---|---|---|---|---|---|---|---|---|---|---|---|
| 28 S.W.G. | W | ·0238 | ·0324 | ·0412 | ·0500 | ·0588 | ·0677 | ·0735 | ·0824 | ·0912 | ·1001 | ·109 | ·118 | | |
| | A | ·0081 | ·011 | ·014 | ·017 | ·020 | ·023 | ·025 | ·028 | ·031 | ·034 | ·037 | ·040 | | |
| | I | ·000032 | ·00008 | ·00013 | ·00027 | ·00044 | ·00066 | ·00096 | ·0013 | ·0018 | ·0023 | ·0029 | ·0037 | | |
| | Z | ·00034 | ·00061 | ·00098 | ·0015 | ·0020 | ·0027 | ·0034 | ·0042 | ·0052 | ·0062 | ·0073 | ·0085 | | |
| | K | ·0613 | ·0833 | ·1052 | ·1275 | ·1497 | ·1715 | ·1935 | ·2157 | ·2360 | 2600 | ·2821 | ·3040 | | |
| 26 S.W.G. | W | ·0282 | ·0382 | ·0500 | ·0588 | ·0706 | ·0795 | ·0905 | ·1001 | ·112 | ·12 | ·132 | ·141 | ·153 | ·165 |
| | A | ·0096 | ·013 | ·017 | ·020 | ·024 | ·027 | ·0308 | ·034 | ·038 | ·041 | ·045 | ·048 | ·052 | ·056 |
| | I | ·000035 | ·00009 | ·00018 | ·00032 | ·00052 | ·00079 | ·00116 | ·0016 | ·0022 | ·0028 | ·0036 | ·0045 | ·0055 | ·0067 |
| | Z | ·00037 | ·00071 | ·0012 | ·0017 | ·0024 | ·0032 | ·0041 | ·0051 | ·0064 | ·0074 | ·0089 | ·0103 | ·0118 | ·0134 |
| | K | ·0602 | ·0823 | ·1043 | ·1262 | ·1486 | ·1706 | ·1925 | ·2147 | ·2366 | ·2588 | ·2810 | ·3032 | ·3248 | ·3473 |
| 24 S.W.G. | W | ·0324 | ·0471 | ·0588 | ·0706 | ·0855 | ·0972 | ·109 | ·124 | ·136 | ·147 | ·162 | ·174 | ·185 | ·200 |
| | A | ·011 | ·016 | ·020 | ·024 | ·029 | ·033 | ·037 | ·042 | ·046 | ·050 | ·055 | ·059 | ·063 | ·068 |
| | I | ·000040 | ·00010 | ·00021 | ·00038 | ·00062 | ·00095 | ·0014 | ·0019 | ·0026 | ·0033 | ·0043 | ·0054 | ·0066 | ·0081 |
| | Z | ·00043 | ·00083 | ·0014 | ·0020 | ·0028 | ·0038 | ·0049 | ·0061 | ·0076 | ·0089 | ·0106 | ·0124 | ·0141 | ·0162 |
| | K | ·0588 | ·0810 | ·1022 | ·1245 | ·1474 | ·1693 | ·1914 | ·2134 | ·2353 | ·2575 | ·2797 | ·3018 | ·3238 | ·3460 |
| 22 S.W.G. | W | ·048 | ·0588 | ·0735 | ·0912 | ·106 | ·124 | ·138 | ·156 | ·171 | ·188 | ·207 | ·221 | ·235 | ·253 |
| | A | ·014 | ·020 | ·025 | ·031 | ·036 | ·042 | ·047 | ·053 | ·058 | ·064 | ·069 | ·075 | ·080 | ·086 |
| | I | ·000046 | ·00012 | ·00026 | ·00046 | ·00075 | ·0012 | ·0017 | ·0023 | ·0032 | ·0041 | ·0053 | ·0067 | ·0083 | ·0101 |
| | Z | ·00049 | ·00098 | ·0016 | ·0025 | ·0035 | ·0046 | ·0060 | ·0075 | ·0093 | ·0111 | ·0131 | ·0153 | ·0177 | ·0202 |
| | K | ·0572 | ·0790 | ·1005 | ·1231 | ·1410 | ·1672 | ·1892 | ·2113 | ·2332 | ·2554 | ·2772 | ·2996 | ·3215 | ·3438 |
| 20 S.W.G. | W | ·058 | ·08219 | ·106 | ·1302 | ·154 | ·1782 | ·202 | ·2262 | ·251 | ·2742 | ·299 | ·3222 | ·347 | ·3703 |
| | A | ·017 | ·02420 | ·0313 | ·03834 | ·0454 | ·05248 | ·0596 | ·06661 | ·0737 | ·08075 | ·0878 | ·09489 | ·102 | ·1090 |
| | I | ·000052 | ·000142 | ·00031 | ·000557 | ·00092 | ·00142 | ·00207 | ·00290 | ·004 | ·00516 | ·0066 | ·00837 | ·0104 | ·01268 |
| | Z | ·00056 | ·00114 | ·00194 | ·00297 | ·00421 | ·00568 | ·00737 | ·00928 | ·0117 | ·01376 | ·0163 | ·01912 | ·0222 | ·02537 |
| | K | ·0551 | ·07666 | ·0978 | ·1205 | ·1424 | ·1645 | ·1872 | ·2086 | ·2305 | ·25280 | ·2745 | ·2969 | ·3190 | ·3411 |
| 18 S.W.G. | W | ·072 | ·0135 | ·136 | ·1675 | ·200 | ·23150 | ·264 | ·2955 | ·328 | ·3592 | ·392 | ·4235 | ·456 | ·4875 |
| | A | ·021 | ·03046 | ·0399 | ·04931 | ·0587 | ·06816 | ·0776 | ·08701 | ·0964 | ·1059 | ·1153 | ·1247 | ·1341 | ·1436 |
| | I | ·000057 | ·000164 | ·00036 | ·000673 | ·00113 | ·00176 | ·00259 | ·00365 | ·0050 | ·00655 | ·0084 | ·01070 | ·0133 | ·01631 |
| | Z | ·00061 | ·00131 | ·00231 | ·00359 | ·00517 | ·00704 | ·00923 | ·01167 | ·0146 | ·01747 | ·0207 | ·02445 | ·0284 | ·03261 |
| | K | ·0521 | ·07333 | ·0946 | ·11690 | ·1387 | ·16070 | ·1828 | ·2047 | ·2266 | ·2489 | ·2705 | ·2929 | ·3153 | ·3370 |
| 17 S.W.G. | W | ·079 | ·115900 | ·153 | ·1906 | ·228 | ·26530 | ·303 | ·3399 | ·378 | ·4146 | ·453 | ·4893 | ·527 | ·5640 |
| | A | ·023 | ·034130 | ·0451 | ·05612 | ·0671 | ·07811 | ·0891 | ·1001 | ·1111 | ·1221 | ·1331 | ·1441 | ·1551 | ·1661 |
| | I | ·000059 | ·000174 | ·00039 | ·000736 | ·00125 | ·00196 | ·00289 | ·00409 | ·0057 | ·00740 | ·0099 | ·01214 | ·0151 | ·01857 |
| | Z | ·00063 | ·001390 | ·00249 | ·00392 | ·00572 | ·00782 | ·01028 | ·01309 | ·0166 | ·01973 | ·0244 | ·02774 | ·0323 | ·03713 |
| | K | ·0506 | ·071330 | ·0927 | ·1145 | ·1360 | ·15820 | ·1800 | ·2022 | ·2240 | ·2462 | ·2682 | ·2902 | ·3120 | ·3344 |
| 16 S.W.G. | W | | ·127000 | ·170 | ·21250 | ·255 | ·2977 | ·341 | ·38310 | ·426 | ·4684 | ·512 | ·5538 | ·597 | ·6391 |
| | A | | ·037400 | ·0499 | ·06253 | ·07510 | ·08766 | ·1002 | ·11280 | ·1254 | ·13790 | ·1505 | ·1631 | ·1756 | ·1882 |
| | I | | ·000181 | ·00041 | ·000788 | ·00135 | ·00217 | ·00316 | ·00450 | ·0062 | ·00818 | ·0106 | ·01349 | ·0168 | ·02071 |
| | Z | | ·00144 | ·00262 | ·0042 | ·00616 | ·00867 | ·01123 | ·01439 | ·0181 | ·02182 | ·0261 | ·03084 | ·0359 | ·04141 |
| | K | | ·08219 | ·0906 | ·11230 | ·1334 | ·1573 | ·1765 | ·19960 | ·2214 | ·2436 | ·2652 | ·2876 | ·3090 | ·3317 |
| 14 S.W.G. | W | | | ·199 | ·252 | ·305 | ·359 | ·412 | ·4658 | ·519 | ·5726 | ·626 | ·6794 | ·733 | ·7862 |
| | A | | | ·0584 | ·0741 | ·0899 | ·1056 | ·1213 | ·1370 | ·1527 | ·1684 | ·1841 | ·1998 | ·2155 | ·2312 |
| | I | | | ·00044 | ·00087 | ·00151 | ·00241 | ·00362 | ·0052 | ·0072 | ·0096 | ·0125 | ·0160 | ·0198 | ·0246 |
| | Z | | | ·00282 | ·00462 | ·00687 | ·00965 | ·01289 | ·0166 | ·0210 | ·0256 | ·0308 | ·0365 | ·0423 | ·0493 |
| | K | | | ·0867 | ·1080 | ·1270 | ·1510 | ·1720 | ·1950 | ·2165 | ·2375 | ·2605 | ·2825 | ·3043 | ·3265 |
| 13 S.W.G. | W | | | | ·278 | ·340 | ·401 | ·462 | ·524 | ·585 | ·647 | ·708 | ·7695 | ·831 | ·8923 |
| | A | | | | ·0818 | ·0999 | ·1179 | ·1360 | ·1541 | ·1721 | ·1902 | ·2082 | ·2263 | ·2444 | ·2624 |
| | I | | | | ·00090 | ·00159 | ·0025 | ·00391 | ·0056 | ·0078 | ·0105 | ·0137 | ·0173 | ·0220 | ·0273 |
| | Z | | | | ·0048 | ·0073 | ·0100 | ·0139 | ·0180 | ·0227 | ·0280 | ·0338 | ·0396 | ·0470 | ·0546 |
| | K | | | | ·1052 | ·1269 | ·1479 | ·1685 | ·1913 | ·2129 | ·2349 | ·2568 | ·2780 | ·3023 | ·3225 |
| 12 S.W.G. | W | | | | | ·371 | ·440 | ·509 | ·579 | ·648 | ·718 | ·787 | ·8565 | ·926 | ·9953 |
| | A | | | | | ·1090 | ·1294 | ·1498 | ·1702 | ·1906 | ·2111 | ·2315 | ·2519 | ·2723 | ·2927 |
| | I | | | | | ·00166 | ·0027 | ·0042 | ·0060 | ·0084 | ·0112 | ·0148 | ·0191 | ·0240 | ·0298 |
| | Z | | | | | ·00759 | ·0108 | ·0148 | ·0192 | ·0245 | ·0299 | ·0365 | ·0436 | ·0513 | ·0597 |
| | K | | | | | ·1233 | ·1448 | ·1664 | ·1879 | ·2094 | ·2314 | ·2530 | ·2740 | ·2968 | ·3180 |

| DIA. | | 1 1/8" | 1 1/4" | 1 3/8" | 1 1/2" | 1 5/8" | 1 3/4" | 1 7/8" | 2" | 2 1/8" | 2 1/4" | 2 3/8" | 2 1/2" | 2 5/8" | 2 3/4" |
|---|---|---|---|---|---|---|---|---|---|---|---|---|---|---|---|
| 24 S.W.G. | W | ·259 | ·289 | ·318 | ·347 | ·377 | ·406 | ·436 | ·465 | ·494 | ·524 | ·553 | ·582 | | |
| | A | ·0762 | ·0849 | ·0935 | ·1022 | ·1108 | ·1194 | ·1281 | ·1367 | ·1453 | ·1540 | ·1626 | ·1713 | | |
| | I | ·0116 | ·0161 | ·0214 | ·0278 | ·0355 | ·0451 | ·0549 | ·0675 | ·0793 | ·0959 | ·1127 | ·1287 | | |
| | Z | ·0207 | ·0258 | ·0312 | ·0371 | ·0437 | ·0515 | ·0586 | ·0675 | ·0746 | ·0853 | ·0948 | ·1030 | | |
| | K | ·3903 | ·4343 | ·4785 | ·5225 | ·5667 | ·6107 | ·6550 | ·6992 | ·7435 | ·7877 | ·8550 | ·8760 | | |
| 22 S.W.G. | W | ·3277 | ·3650 | ·4024 | ·4398 | ·4771 | ·5144 | ·5518 | ·5890 | ·6264 | ·6638 | ·7011 | ·7384 | ·806 | ·844 |
| | A | ·09649 | ·1075 | ·1185 | ·1295 | ·1405 | ·1515 | ·1625 | ·1735 | ·1845 | ·1955 | ·2065 | ·2174 | ·204 | ·214 |
| | I | ·01453 | ·02008 | ·02689 | ·03509 | ·0448 | ·05616 | ·06930 | ·08430 | ·1014 | ·1207 | ·1422 | ·1661 | ·171 | ·198 |
| | Z | ·02582 | ·03212 | ·03911 | ·04678 | ·05514 | ·06419 | ·07392 | ·08430 | ·09545 | ·1072 | ·1197 | ·1329 | ·1296 | ·144 |
| | K | ·3880 | ·4322 | ·4763 | ·5205 | ·5647 | ·6089 | ·6531 | ·6972 | ·7415 | ·7857 | ·8299 | ·8741 | ·917 | ·962 |
| 20 S.W.G. | W | ·4183 | ·4662 | ·5143 | ·5623 | ·6103 | ·6583 | ·7063 | ·7543 | ·8023 | ·8503 | ·8984 | ·9463 | ·9496 | 1·0422 |
| | A | ·1232 | ·1373 | ·1514 | ·1656 | ·1797 | ·1938 | ·2080 | ·2221 | ·2363 | ·2504 | ·2645 | ·2787 | ·2928 | ·3069 |
| | I | ·01828 | ·02532 | ·03397 | ·04439 | ·05676 | ·07122 | ·0880 | ·1071 | ·1289 | ·1535 | ·1810 | ·2115 | ·2454 | ·2827 |
| | Z | ·03250 | ·04051 | ·04941 | ·05918 | ·06986 | ·08139 | ·09383 | ·1071 | ·1213 | ·1364 | ·1524 | ·1692 | ·1870 | ·2056 |
| | K | ·3853 | ·4295 | ·4736 | ·5178 | ·56200 | ·6062 | ·6503 | ·6944 | ·7387 | ·7829 | ·8272 | ·8713 | ·9155 | ·9598 |
| 18 S.W.G. | W | ·5515 | ·6155 | ·6796 | ·7436 | ·8076 | ·8716 | ·9356 | ·9996 | 1·0637 | 1·1276 | 1·1917 | 1·2557 | 1·3197 | 1·3837 |
| | A | ·1624 | ·1813 | ·2001 | ·2190 | ·2378 | ·2567 | ·2755 | ·2994 | ·3132 | ·3321 | ·3509 | ·3698 | ·3886 | ·4075 |
| | I | ·0236 | ·03279 | ·04411 | ·05777 | ·0740 | ·09301 | ·1150 | ·1403 | ·1690 | ·2014 | ·2376 | ·2780 | ·3227 | ·3720 |
| | Z | ·04195 | ·05246 | ·06416 | ·07703 | ·09108 | ·1063 | ·1227 | ·1403 | ·1590 | ·1790 | ·2001 | ·2224 | ·2459 | ·2705 |
| | K | ·3812 | ·4253 | ·4695 | ·5137 | ·5578 | ·6020 | ·6462 | ·6903 | ·7345 | ·7787 | ·8229 | ·8671 | ·9113 | ·9555 |
| 17 S.W.G. | W | ·6387 | ·7133 | ·7880 | ·8627 | ·9375 | 1·0118 | 1·0868 | 1·1614 | 1·2361 | 1·3108 | 1·3855 | 1·4602 | 1·5349 | 1·6096 |
| | A | ·1881 | ·2101 | ·2321 | ·2540 | ·2761 | ·2980 | ·3200 | ·3420 | ·3640 | ·3860 | ·4080 | ·4300 | ·4520 | ·4740 |
| | I | ·02694 | ·03752 | ·05054 | ·06632 | ·08506 | ·1070 | ·1325 | ·1617 | ·1950 | ·2324 | ·2744 | ·3212 | ·3731 | ·4302 |
| | Z | ·04789 | ·06003 | ·07352 | ·08842 | ·1047 | ·1223 | ·1413 | ·1617 | ·1835 | ·2066 | ·2311 | ·2570 | ·2842 | ·3129 |
| | K | ·3785 | ·4226 | ·4667 | ·5109 | ·5551 | ·5993 | ·6434 | ·6876 | ·7318 | ·7760 | ·8202 | ·8644 | ·9085 | ·9549 |
| 16 S.W.G. | W | ·7244 | ·8098 | ·8952 | ·9805 | 1·0658 | 1·1512 | 1·2365 | 1·3219 | 1·4073 | 1·4930 | 1·5780 | 1·6632 | 1·7487 | 1·8341 |
| | A | ·2133 | ·2385 | ·2636 | ·2887 | ·3139 | ·3390 | ·3641 | ·3893 | ·4144 | ·4395 | ·4647 | ·4898 | ·5149 | ·5401 |
| | I | ·03013 | ·04205 | ·05677 | ·07457 | ·09576 | ·1206 | ·1495 | ·1825 | ·2202 | ·2628 | ·3105 | ·3636 | ·4224 | ·4873 |
| | Z | ·05356 | ·06729 | ·08258 | ·09943 | ·1179 | ·1379 | ·1594 | ·1825 | ·2073 | ·2336 | ·2614 | ·2909 | ·3219 | ·3544 |
| | K | ·3758 | ·4200 | ·4641 | ·5082 | ·5524 | ·5966 | ·6407 | ·6848 | ·7290 | ·7732 | ·8174 | ·8616 | ·9058 | ·9499 |
| 14. S.W.G. | W | ·8930 | ·9998 | 1·1053 | 1·2120 | 1·3187 | 1·4253 | 1·5320 | 1·6387 | 1·7454 | 1·8521 | 1·9588 | 2·0655 | 2·1722 | 2·2788 |
| | A | ·2626 | ·2941 | ·3255 | ·3569 | ·3883 | ·4197 | ·4511 | ·4826 | ·5140 | ·5454 | ·5768 | ·6082 | ·6396 | ·6710 |
| | I | ·0361 | ·0506 | ·0685 | ·09024 | ·1162 | ·1467 | ·1821 | ·2228 | ·2691 | ·3215 | ·3802 | ·4458 | ·5184 | ·5985 |
| | Z | ·0641 | ·0809 | ·09964 | ·1203 | ·1430 | ·1676 | ·1942 | ·2228 | ·2533 | ·2858 | ·3202 | ·3566 | ·3950 | ·4353 |
| | K | ·3700 | ·4140 | ·4588 | ·5029 | ·5470 | ·5911 | ·6353 | ·6795 | ·7236 | ·7678 | ·8119 | ·8561 | ·9903 | ·9444 |
| 13 S.W.G. | W | 1·0152 | 1·1380 | 1·2608 | 1·3820 | 1·5047 | 1·6270 | 1·7501 | 1·8727 | 1·9955 | 2·1182 | 2·2409 | 2·3635 | 2·4862 | 2·6088 |
| | A | ·2985 | ·3347 | ·3708 | ·4070 | ·4431 | ·4792 | ·5153 | ·5515 | ·5876 | ·6237 | ·6599 | ·6960 | ·7321 | ·7682 |
| | I | ·0401 | ·0564 | ·0767 | ·1013 | ·1306 | ·1652 | ·2053 | ·2515 | ·3042 | ·3638 | ·4306 | ·5052 | ·5880 | ·6793 |
| | Z | ·0713 | ·0903 | ·1116 | ·1350 | ·1604 | ·1888 | ·2190 | ·2515 | ·2863 | ·3233 | ·3626 | ·4042 | ·4480 | ·4940 |
| | K | ·3681 | ·4105 | ·4545 | ·4989 | ·5424 | ·5871 | ·6312 | ·6753 | ·7195 | ·7637 | ·8078 | ·8520 | ·8962 | ·9404 |
| 12 S.W.G. | W | 1·1341 | 1·2730 | 1·4118 | 1·5506 | 1·6877 | 1·8263 | 1·9650 | 2·1037 | 2·2425 | 2·3811 | 2·5198 | 2·6585 | 2·7972 | 2·9359 |
| | A | ·3336 | ·3744 | ·4152 | ·4561 | ·4970 | ·5378 | ·5786 | ·6195 | ·6608 | ·7012 | ·7420 | ·7828 | ·8237 | ·8645 |
| | I | ·0440 | ·0620 | ·0844 | ·1117 | ·1440 | ·1829 | ·2277 | ·2792 | ·3380 | ·4046 | ·4794 | ·5628 | ·6555 | ·7578 |
| | Z | ·0783 | ·0994 | ·1228 | ·1490 | ·1777 | ·2090 | ·2428 | ·2792 | ·3182 | ·3596 | ·4037 | ·4503 | ·4994 | ·5511 |
| | K | ·3645 | ·4065 | ·4497 | ·4945 | ·5390 | ·5831 | ·6272 | ·6713 | ·7155 | ·7596 | ·8038 | ·8479 | ·8921 | ·9363 |
| 11 S.W.G. | W | 1·2500 | 1·4049 | 1·5597 | 1·7146 | 1·8695 | 2·0222 | 2·1769 | 2·3316 | 2·4863 | 2·6410 | 2·7597 | 2·9503 | 3·1052 | 3·2598 |
| | A | ·3676 | ·4132 | ·4587 | ·5043 | ·5498 | ·5955 | ·6410 | ·6866 | ·7321 | ·7777 | ·8232 | ·8688 | ·9144 | ·9599 |
| | I | ·0478 | ·0671 | ·0916 | ·1216 | ·1575 | ·1998 | ·2490 | ·3058 | ·3706 | ·4440 | ·5265 | ·6187 | ·7211 | ·8341 |
| | Z | ·0843 | ·1074 | ·1333 | ·1621 | ·1938 | ·2283 | ·2656 | ·3058 | ·3488 | ·3947 | ·4434 | ·4950 | ·5494 | ·6066 |
| | K | ·3582 | ·4030 | ·4460 | ·4905 | ·5345 | ·5792 | ·6233 | ·6673 | ·7115 | ·7556 | ·7998 | ·8439 | ·8880 | ·9322 |
| 10 S.W.G | W | 1·363 | 1·534 | 1·705 | 1·876 | 2·047 | 2·217 | 2·386 | 2·556 | 2·727 | 2·898 | 3·069 | 3·239 | 3·41 | 3·581 |
| | A | ·4009 | ·4512 | ·5014 | ·5517 | ·6020 | ·6522 | ·7025 | ·7528 | ·8030 | ·8533 | ·9036 | ·9538 | 1·0041 | 1·0544 |
| | I | ·0506 | ·0719 | ·0997 | ·1306 | ·1697 | ·2156 | ·2695 | ·3313 | ·4020 | ·4821 | ·5722 | ·6728 | ·7847 | ·9083 |
| | Z | ·0901 | ·1150 | ·1451 | ·1741 | ·2088 | ·2580 | ·2874 | ·3313 | ·3783 | ·4285 | ·4818 | ·5383 | ·5979 | ·6606 |
| | K | ·3555 | ·3993 | ·4430 | ·4870 | ·5310 | ·5750 | ·6193 | ·6634 | ·7067 | ·7516 | ·7958 | ·8399 | ·8840 | ·9281 |

| DIA. | | 2 7/8" | 3" | 3 1/8" | 3 1/4" | 3 3/8" | 3 1/2" | 3 5/8" | 3 3/4" | 3 7/8" | 4" | 4 1/4" | 4 1/2" | 4 3/4" | 5" |
|---|---|---|---|---|---|---|---|---|---|---|---|---|---|---|---|
| 20 S.W.G. | W | 1·0904 | 1·1383 | 1·187 | 1·224 | 1·280 | 1·308 | 1·385 | | | | | | | |
| | A | ·3211 | ·3352 | ·349 | ·361 | ·377 | ·385 | ·408 | | | | | | | |
| | I | ·3237 | ·3682 | ·417 | ·472 | ·530 | ·628 | ·658 | | | | | | | |
| | Z | ·2251 | ·2455 | ·267 | ·291 | ·315 | ·359 | ·363 | | | | | | | |
| | K | 1·0040 | 1·0480 | 1·079 | 1·135 | 1·179 | 1·225 | 1·268 | | | | | | | |
| 18 S.W.G. | W | 1·4477 | 1·5117 | 1·5757 | 1·6397 | 1·710 | 1·813 | 1·840 | 1·890 | | | | | | |
| | A | ·4263 | ·4451 | ·4640 | ·4828 | ·504 | ·534 | ·542 | ·557 | | | | | | |
| | I | ·4261 | ·4851 | ·5493 | ·6190 | ·698 | ·796 | ·865 | ·951 | | | | | | |
| | Z | ·2964 | ·3234 | ·3516 | ·3809 | ·414 | ·455 | ·477 | ·508 | | | | | | |
| | K | ·9998 | 1·0439 | 1·0881 | 1·1323 | 1·176 | 1·221 | 1·265 | 1·310 | | | | | | |
| 17 S.W.G. | W | 1·6841 | 1·7588 | 1·8335 | 1·9082 | 1·9829 | 2·060 | 2·135 | 2·207 | 2·285 | | | | | |
| | A | ·4959 | ·5179 | ·5399 | ·5619 | ·5839 | ·606 | ·628 | ·650 | ·672 | | | | | |
| | I | ·4930 | ·5614 | ·6359 | ·7168 | ·8043 | ·899 | 1·000 | 1·109 | 1·225 | | | | | |
| | Z | ·3429 | ·3742 | ·4070 | ·4411 | ·4766 | ·513 | ·552 | ·591 | ·632 | | | | | |
| | K | ·9370 | 1·0411 | 1·0853 | 1·1295 | 1·1736 | 1·219 | 1·263 | 1·307 | 1·351 | | | | | |
| 16 S.W.G. | W | 1·9194 | 2·0047 | 2·0901 | 2·1754 | 2·2607 | 2·3462 | 2·421 | 2·530 | 2·611 | 2·665 | | | | |
| | A | ·5652 | ·5903 | ·6155 | ·6406 | ·6657 | ·6909 | ·714 | ·746 | ·769 | ·785 | | | | |
| | I | ·5587 | ·6364 | ·7212 | ·8132 | ·9126 | 1·0199 | 1·134 | 1·226 | 1·394 | 1·522 | | | | |
| | Z | ·3886 | ·4243 | ·4616 | ·5004 | ·5408 | ·5828 | ·625 | ·675 | ·720 | ·761 | | | | |
| | K | ·9942 | 1·0383 | 1·0825 | 1·1267 | 1·1709 | 1·2150 | ·259 | ·303 | ·348 | 1·393 | | | | |
| 14 S.W.G. | W | 2·3856 | 2·4922 | 2·5989 | 2·7056 | 2·8122 | 2·9190 | 3·038 | 3·133 | 3·250 | 3·325 | 3·550 | | | |
| | A | ·7025 | ·7339 | ·7653 | ·7967 | ·8281 | ·8595 | ·895 | ·922 | ·957 | ·985 | 1·048 | | | |
| | I | ·6867 | ·7830 | ·8876 | 1·0017 | 1·1246 | 1·2574 | 1·409 | 1·554 | 1·729 | 1·893 | 2·279 | | | |
| | Z | ·4777 | ·5220 | ·5681 | ·6164 | ·6664 | ·7185 | ·777 | ·829 | ·893 | ·947 | 1·072 | | | |
| | K | ·9887 | 1·0329 | 1·0770 | 1·1213 | 1·1654 | 1·2095 | 1·253 | 1·299 | 1·344 | 1·386 | 1·475 | | | |
| 13 S.W.G. | W | 2·7316 | 2·8542 | 2·9770 | 3·0996 | 3·2225 | 3·3451 | 3·468 | 3·600 | 3·715 | 3·815 | 4·085 | 4·325 | | |
| | A | ·8044 | ·8405 | ·8766 | ·9127 | ·9489 | ·9850 | 1·021 | 1·060 | 1·092 | 1·123 | 1·202 | 1·273 | | |
| | I | ·7797 | ·8894 | 1·0090 | 1·1389 | 1·2794 | 1·4312 | 1·600 | 1·771 | 1·955 | 2·145 | 2·595 | 3·094 | | |
| | Z | ·5424 | ·5929 | ·6458 | ·7008 | ·7582 | ·8178 | ·883 | ·945 | 1·008 | 1·073 | 1·223 | 1·375 | | |
| | K | ·9846 | 1·0287 | 1·0728 | 1·1170 | 1·1612 | 1·2054 | 1·249 | 1·294 | 1·338 | 1·383 | 1·472 | 1·560 | | |
| 12 S.W.G. | W | 3·0746 | 3·2133 | 3·3520 | 3·4907 | 3·6294 | 3·7681 | 3·892 | 4·051 | 4·185 | 4·325 | 4·595 | 4·875 | 5·145 | |
| | A | ·9054 | ·9462 | ·9870 | 1·0279 | 1·0687 | 1·1096 | 1·146 | 1·193 | 1·232 | 1·272 | 1·351 | 1·437 | 1·515 | |
| | I | ·8703 | ·9933 | 1·1274 | 1·2731 | 1·4309 | 1·6011 | 1·781 | 1·985 | 2·188 | 2·418 | 2·908 | 3·477 | 4·095 | |
| | Z | ·6055 | ·6622 | ·7216 | ·7835 | ·8479 | ·9149 | ·985 | 1·058 | 1·130 | 1·209 | 1·371 | 1·545 | 1·725 | |
| | K | ·9805 | 1·0246 | 1·0687 | 1·1129 | 1·1571 | 1·2013 | 1·245 | 1·289 | 1·335 | 1·378 | 1·465 | 1·554 | 1·645 | |
| 11 S.W.G. | W | 3·4147 | 3·5690 | 3·7238 | 3·8786 | 4·0333 | 4·1880 | 4·350 | 4·497 | 4·670 | 4·800 | 5·117 | 5·420 | 5·730 | 6·043 |
| | A | 1·0055 | 1·0510 | 1·0966 | 1·1421 | 1·1877 | 1·2332 | 1·280 | 1·324 | 1·375 | 1·415 | 1·507 | 1·598 | 1·689 | 1·780 |
| | I | ·9585 | 1·0945 | 1·2430 | 1·4042 | 1·5789 | 1·7674 | 1·975 | 2·188 | 2·480 | 2·671 | 3·221 | 3·841 | 4·536 | 5·310 |
| | Z | ·6668 | ·7297 | ·7955 | ·8641 | ·9356 | 1·0100 | 1·090 | 1·167 | 1·280 | 1·336 | 1·516 | 1·707 | 1·910 | 2·124 |
| | K | ·9764 | 1·0205 | 1·0647 | 1·1088 | 1·1530 | 1·1971 | 1·242 | 1·285 | 1·330 | 1·374 | 1·421 | 1·552 | 1·640 | 1·728 |
| 10 S.W.G. | W | 3·7426 | 3·922 | 4·083 | 4·263 | 4·434 | 4·605 | 4·770 | 4·945 | 5·120 | 5·275 | 5·625 | 5·965 | 6·300 | 6·645 |
| | A | 1·105 | 1·155 | 1·205 | 1·255 | 1·306 | 1·356 | 1·405 | 1·452 | 1·508 | 1·554 | 1·658 | 1·759 | 1·852 | 1·956 |
| | I | 1·044 | 1·193 | 1·356 | 1·532 | 1·724 | 1·930 | 2·145 | 2·381 | 2·650 | 2·915 | 3·511 | 4·200 | 4·955 | 5·795 |
| | Z | ·7265 | ·7955 | ·8676 | ·9429 | 1·021 | 1·103 | 1·184 | 1·273 | 1·368 | 1·458 | 1·654 | 1·867 | 2·088 | 2·317 |
| | K | ·9735 | 1·0165 | 1·062 | 1·105 | 1·149 | 1·193 | 1·235 | 1·280 | 1·326 | 1·370 | 1·415 | 1·547 | 1·638 | 1·725 |

| DATE | |
|---|---|
| | |
| | |
| | |
| | |
| | |
| | |
| | |
| | |

PILED BY
F. T.
CED BY
NET & Co
12. 46.
ROVED BY
1.79.

PROPERTIES OF CIRCULAR TUBES

DRAWING OFFICE III/
DATA SHEET No /32.

E HAVILLAND AIRCRAFT COMPANY LTD.. HATFIELD, HERTS.

W = WEIGHT PER FOOT RUN IN LBS OF STEEL TUBES.
W × ·356 = WEIGHT PER FOOT RUN IN LBS OF LIGHT ALLOY TUBES.
A = AREA IN INS.$^2$
I = MOMENT OF INERTIA INS.$^4$ (BENDING.)
Z = MODULUS OF SECTION INS.$^3$ (BENDING.)
K = RADIUS OF GYRATION INS.

| DIA. | | 3/16" | 1/4" | 5/16" | 7/8" | 3" | 3 1/8" | 3 1/4" | 3 3/8" | 3 1/2" | 3 5/8" | 3 3/4" | 3 7/8" | 4" | 4 1/4" | 4 1/2" | 4 3/4" | 5" |
|---|---|---|---|---|---|---|---|---|---|---|---|---|---|---|---|---|---|---|
| 28 S.W.G. | W | ·0238 | ·0324 | ·0412 | | | | | | | | | | | | | | |
| | A | ·0081 | ·011 | ·014 | | | | | | | | | | | | | | |
| | I | ·000032 | ·00008 | ·00013 | | | | | | | | | | | | | | |
| | Z | ·00034 | ·00061 | ·00098 | | | | | | | | | | | | | | |
| | K | ·0613 | ·0833 | ·1052 | | | | | | | | | | | | | | |
| 26 S.W.G. | W | ·0282 | ·0382 | ·0500 | | | | | | | | | | | | | | |
| | A | ·0096 | ·013 | ·017 | | | | | | | | | | | | | | |
| | I | ·000035 | ·00009 | ·00018 | | | | | | | | | | | | | | |
| | Z | ·00037 | ·00071 | ·0012 | | | | | | | | | | | | | | |
| | K | ·0602 | ·0823 | ·1043 | | | | | | | | | | | | | | |
| 24 S.W.G. | W | ·0324 | ·0471 | ·0588 | ·904 | 1·1383 | 1·187 | 1·224 | 1·280 | 1·308 | 1·385 | | | | | | | |
| | A | ·011 | ·016 | ·020 | ·211 | ·3352 | ·349 | ·361 | ·377 | ·385 | ·408 | | | | | | | |
| | I | ·000040 | ·00010 | ·00021 | ·137 | ·3682 | ·417 | ·472 | ·530 | ·628 | ·658 | | | | | | | |
| | Z | ·00043 | ·00083 | ·0014 | ·251 | ·2455 | ·267 | ·291 | ·315 | ·359 | ·363 | | | | | | | |
| | K | ·0588 | ·0810 | ·1022 | ·040 | 1·0480 | 1·079 | 1·135 | 1·179 | 1·225 | 1·268 | | | | | | | |
| 22 S.W.G. | W | ·048 | ·0588 | ·0735 | ·77 | 1·5117 | 1·5757 | 1·6397 | 1·710 | 1·813 | 1·840 | 1·890 | | | | | | |
| | A | ·014 | ·020 | ·025 | ·163 | ·4451 | ·4640 | ·4828 | ·504 | ·534 | ·542 | ·557 | | | | | | |
| | I | ·000046 | ·00012 | ·00026 | ·161 | ·4851 | ·5493 | ·6190 | ·698 | ·796 | ·865 | ·951 | | | | | | |
| | Z | ·00049 | ·00098 | ·0016 | ·164 | ·3234 | ·3516 | ·3809 | ·414 | ·455 | ·477 | ·508 | | | | | | |
| | K | ·0572 | ·0790 | ·1005 | ·198 | 1·0439 | 1·0881 | 1·1323 | 1·176 | 1·221 | 1·265 | 1·310 | | | | | | |
| 20 S.W.G. | W | ·058 | ·08219 | ·106 | ·141 | 1·7588 | 1·8335 | 1·9082 | 1·9829 | 2·060 | 2·135 | 2·207 | 2·285 | | | | | |
| | A | ·017 | ·02420 | ·0313 | ·159 | ·5179 | ·5399 | ·5619 | ·5839 | ·606 | ·628 | ·650 | ·672 | | | | | |
| | I | ·000052 | ·000142 | ·00031 | ·130 | ·5614 | ·6359 | ·7168 | ·8043 | ·899 | 1·000 | 1·109 | 1·225 | | | | | |
| | Z | ·00056 | ·00114 | ·00194 | ·129 | ·3742 | ·4070 | ·4411 | ·4766 | ·513 | ·552 | ·591 | ·632 | | | | | |
| | K | ·0551 | ·07666 | ·0978 | ·170 | 1·0411 | 1·0853 | 1·1295 | 1·1736 | 1·219 | 1·263 | 1·307 | 1·351 | | | | | |
| 18 S.W.G. | W | ·072 | ·0135 | ·136 | ·94 | 2·0047 | 2·0901 | 2·1754 | 2·2607 | 2·3462 | 2·421 | 2·530 | 2·611 | 2·665 | | | | |
| | A | ·021 | ·03046 | ·0399 | ·152 | ·5903 | ·6155 | ·6406 | ·6657 | ·6909 | ·714 | ·746 | ·769 | ·785 | | | | |
| | I | ·000057 | ·000164 | ·00036 | ·187 | ·6364 | ·7212 | ·8132 | ·9126 | 1·0199 | 1·134 | 1·226 | 1·394 | 1·522 | | | | |
| | Z | ·00061 | ·00131 | ·00231 | ·186 | ·4243 | ·4616 | ·5004 | ·5408 | ·5828 | ·625 | ·675 | ·720 | ·761 | | | | |
| | K | ·0521 | ·07333 | ·0946 | ·142 | 1·0383 | 1·0825 | 1·1267 | 1·1709 | 1·2150 | 1·259 | 1·303 | 1·348 | 1·393 | | | | |
| 17 S.W.G. | W | ·079 | ·115900 | ·153 | ·156 | 2·4922 | 2·5989 | 2·7056 | 2·8122 | 2·9190 | 3·038 | 3·133 | 3·250 | 3·325 | 3·550 | | | |
| | A | ·023 | ·034130 | ·0451 | ·125 | ·7339 | ·7653 | ·7967 | ·8281 | ·8595 | ·895 | ·922 | ·957 | ·985 | 1·048 | | | |
| | I | ·000059 | ·000174 | ·00039 | ·167 | ·7830 | ·8876 | 1·0017 | 1·1246 | 1·2574 | 1·409 | 1·554 | 1·729 | 1·893 | 2·279 | | | |
| | Z | ·00063 | ·001390 | ·00249 | ·177 | ·5220 | ·5681 | ·6164 | ·6664 | ·7185 | ·777 | ·829 | ·893 | ·947 | 1·072 | | | |
| | K | ·0506 | ·071330 | ·0927 | ·187 | 1·0329 | 1·0770 | 1·1213 | 1·1654 | 1·2095 | 1·253 | 1·299 | 1·344 | 1·386 | 1·475 | | | |
| 16 S.W.G. | W | | ·127000 | ·170 | ·116 | 2·8542 | 2·9770 | 3·0996 | 3·2225 | 3·3451 | 3·468 | 3·600 | 3·715 | 3·815 | 4·085 | 4·325 | | |
| | A | | ·037400 | ·0499 | ·144 | ·8405 | ·8766 | ·9127 | ·9489 | ·9850 | 1·021 | 1·060 | 1·092 | 1·123 | 1·202 | 1·273 | | |
| | I | | ·000181 | ·00041 | ·197 | ·8894 | 1·0090 | 1·1389 | 1·2794 | 1·4312 | 1·600 | 1·771 | 1·955 | 2·145 | 2·595 | 3·094 | | |
| | Z | | ·00144 | ·00262 | ·124 | ·5929 | ·6458 | ·7008 | ·7582 | ·8178 | ·883 | ·945 | 1·008 | 1·073 | 1·223 | 1·375 | | |
| | K | | ·08219 | ·0906 | ·146 | 1·0287 | 1·0728 | 1·1170 | 1·1612 | 1·2054 | 1·249 | 1·294 | 1·338 | 1·383 | 1·472 | 1·560 | | |
| 14 S.W.G. | W | | | ·199 | ·146 | 3·2133 | 3·3520 | 3·4907 | 3·6294 | 3·7681 | 3·892 | 4·051 | 4·185 | 4·325 | 4·595 | 4·875 | 5·145 | |
| | A | | | ·0584 | ·154 | ·9462 | ·9870 | 1·0279 | 1·0687 | 1·1096 | 1·146 | 1·193 | 1·232 | 1·272 | 1·351 | 1·437 | 1·515 | |
| | I | | | ·00044 | ·103 | ·9933 | 1·1274 | 1·2731 | 1·4309 | 1·6011 | 1·781 | 1·985 | 2·188 | 2·418 | 2·908 | 3·477 | 4·095 | |
| | Z | | | ·00282 | ·155 | ·6622 | ·7216 | ·7835 | ·8479 | ·9149 | ·985 | 1·058 | 1·130 | 1·209 | 1·371 | 1·545 | 1·725 | |
| | K | | | ·0867 | ·105 | 1·0246 | 1·0687 | 1·1129 | 1·1571 | 1·2013 | 1·245 | 1·289 | 1·335 | 1·378 | 1·465 | 1·554 | 1·645 | |
| 13 S.W.G. | W | | | | ·147 | 3·5690 | 3·7238 | 3·8786 | 4·0333 | 4·1880 | 4·350 | 4·497 | 4·670 | 4·800 | 5·117 | 5·420 | 5·730 | 6·043 |
| | A | | | | ·155 | 1·0510 | 1·0966 | 1·1421 | 1·1877 | 1·2332 | 1·280 | 1·324 | 1·375 | 1·415 | 1·507 | 1·598 | 1·689 | 1·780 |
| | I | | | | ·185 | 1·0945 | 1·2430 | 1·4042 | 1·5789 | 1·7674 | 1·975 | 2·188 | 2·480 | 2·671 | 3·221 | 3·841 | 4·536 | 5·310 |
| | Z | | | | ·168 | ·7297 | ·7955 | ·8641 | ·9356 | 1·0100 | 1·090 | 1·167 | 1·280 | 1·336 | 1·516 | 1·707 | 1·910 | 2·124 |
| | K | | | | ·164 | 1·0205 | 1·0647 | 1·1088 | 1·1530 | 1·1971 | 1·242 | 1·285 | 1·330 | 1·374 | 1·421 | 1·552 | 1·640 | 1·728 |
| 12 S.W.G. | W | | | | 26 | 3·922 | 4·083 | 4·263 | 4·434 | 4·605 | 4·770 | 4·945 | 5·120 | 5·275 | 5·625 | 5·965 | 6·300 | 6·645 |
| | A | | | | 5 | 1·155 | 1·205 | 1·255 | 1·306 | 1·356 | 1·405 | 1·452 | 1·508 | 1·554 | 1·658 | 1·759 | 1·852 | 1·956 |
| | I | | | | 4 | 1·193 | 1·356 | 1·532 | 1·724 | 1·930 | 2·145 | 2·381 | 2·650 | 2·915 | 3·511 | 4·200 | 4·955 | 5·795 |
| | Z | | | | 65 | ·7955 | ·8676 | ·9429 | 1·021 | 1·103 | 1·184 | 1·273 | 1·368 | 1·458 | 1·654 | 1·867 | 2·088 | 2·317 |
| | K | | | | 35 | 1·0165 | 1·062 | 1·105 | 1·149 | 1·193 | 1·235 | 1·280 | 1·326 | 1·370 | 1·415 | 1·547 | 1·638 | 1·725 |

| ISSUE Nº | DATE |
|---|---|
| 1 | |
| | |
| | |
| | |
| | |
| | |

COMPILED BY: W. F. T.
TRACED BY: GARNET & Co 18. 12. 46.
APPROVED BY: [illegible]

PERTIES OF CIRCULAR TUBES

DRAWING OFFICE III/
DATA SHEET Nº /32.

THE DE HAVILLAND AIRCRAFT COMPANY LTD., HATFIELD, HERTS.

## ALLOWABLE SHEAR STRESS FOR TUBES IN TORSION V D/t.

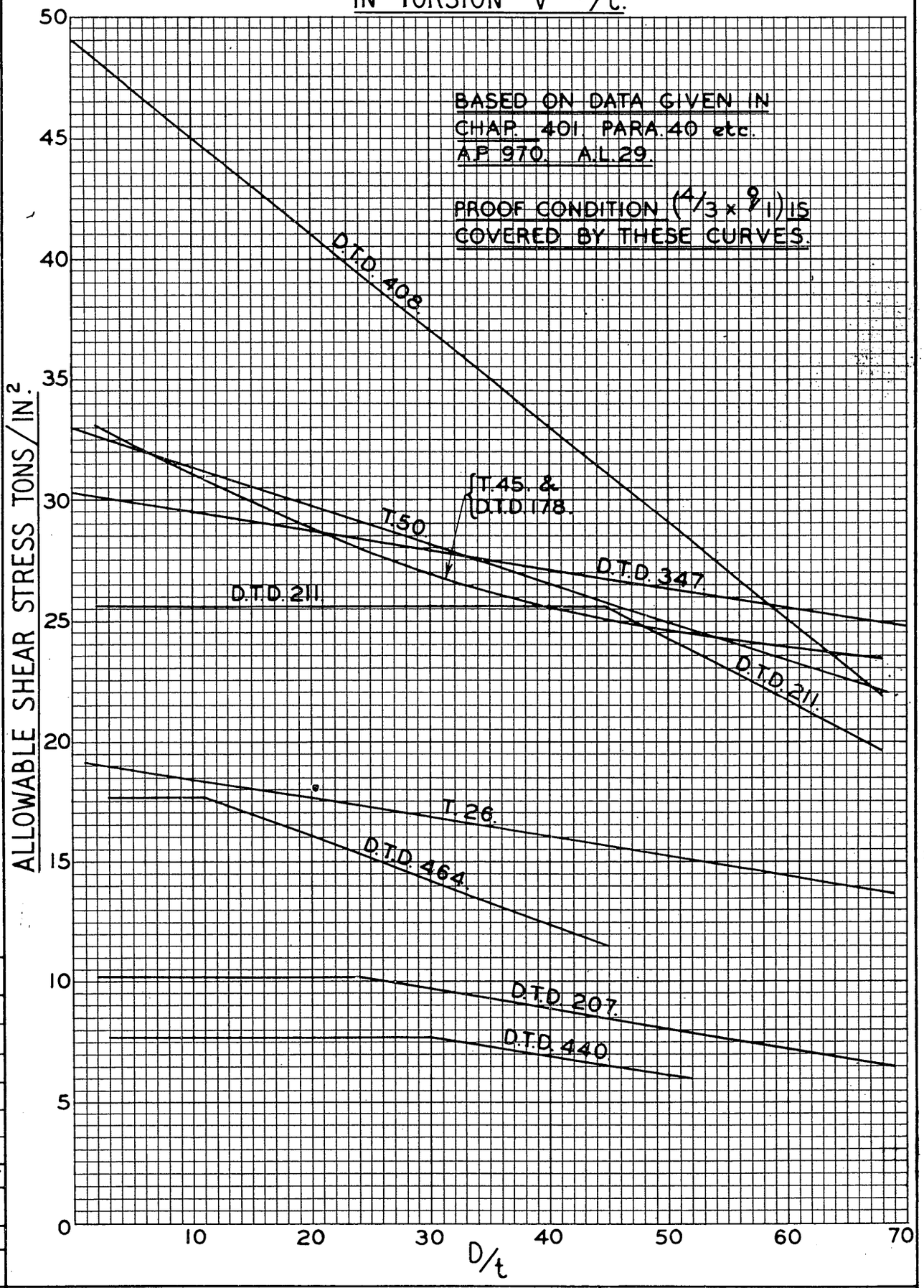


| ISSUE Nº | DATE |
|---|---|
| 1 | |
| | |
| | |
| | |
| | |
| | |

COMPILED BY

TRACED BY GARNET & Co 14 - 1 - 47

APPROVED BY R.H.J.H.

ALLOWABLE SHEAR STRESS FOR TUBES IN TORSION.

DRAWING OFFICE III/ DATA SHEET Nº /34

113

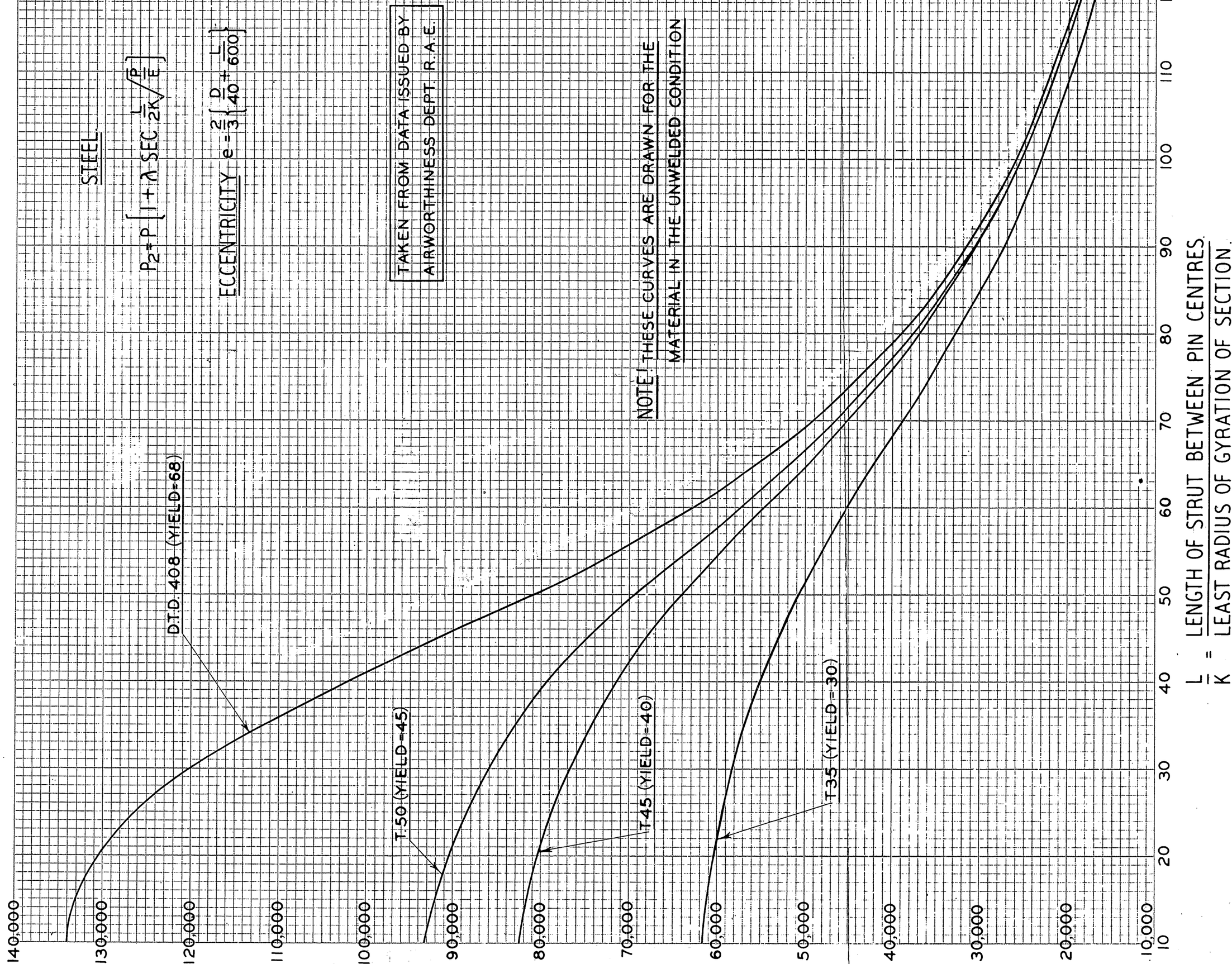


| ISSUE Nº | DATE |
|---|---|
| 1 | 12.12.46 |
| | |
| | |
| | |
| | |
| | |

| | |
|---|---|
| COMPILED BY | J.G. STRONG P. SAVITSKY |
| TRACED BY | GARNET & Co 31. 12. '46 |
| APPROVED BY | [illegible] |

ALLOWABLE STRESS FOR TUBULAR STRUTS WITH PIN JOINTED ENDS

DESIGN DATA SHEET Nº III/35.

| | |
|---|---|
| DATE | 12.12.46 |
| ILLED BY | |
| TRONG VITSKY | |
| ED BY | |

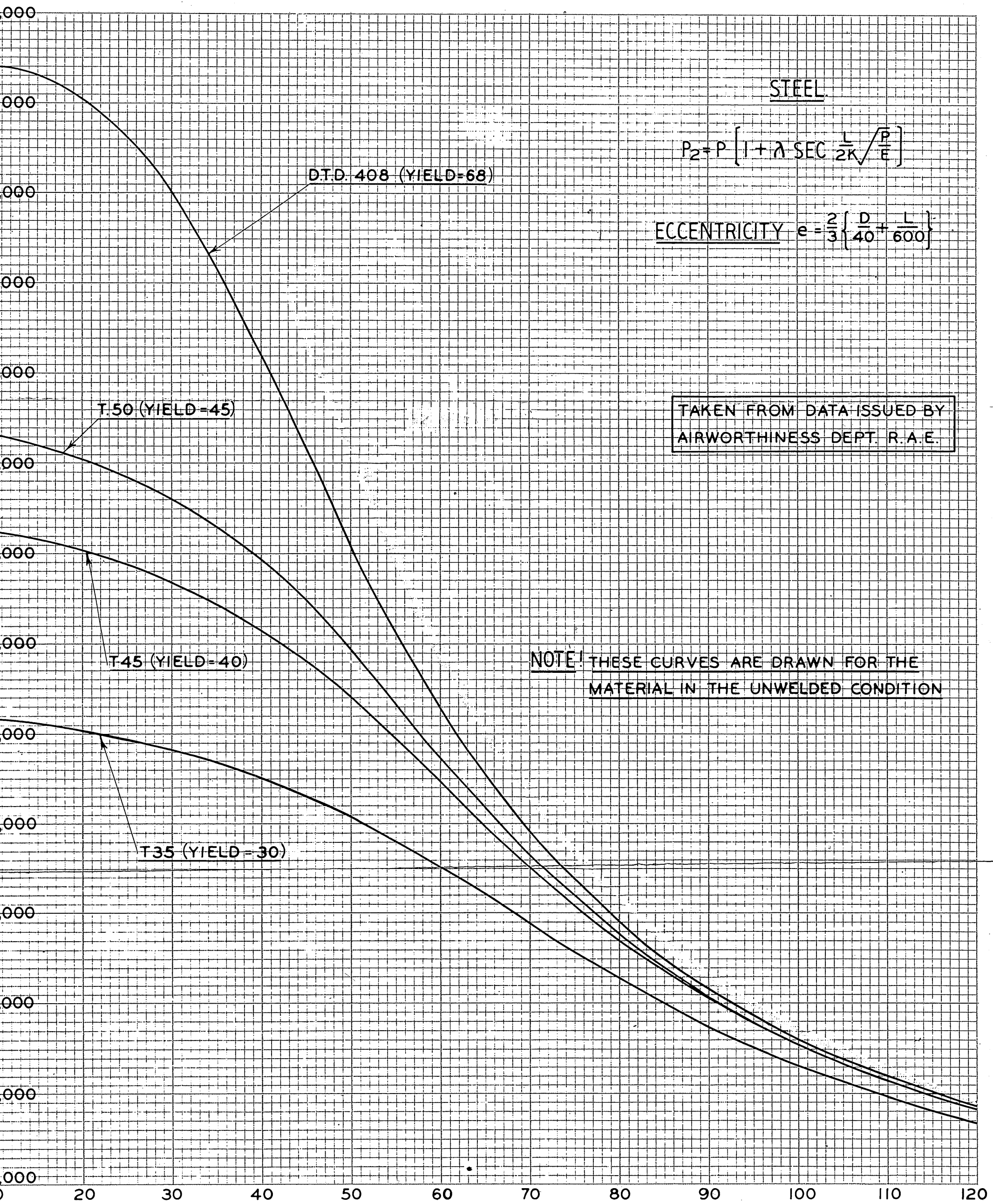


THE DE HAVILLAND AIRCRAFT COMPANY LTD., HATFIELD, HERTS.

THE DE HAVILLAND AIRCRAFT COMPANY LTD., HATFIELD, HERTS.

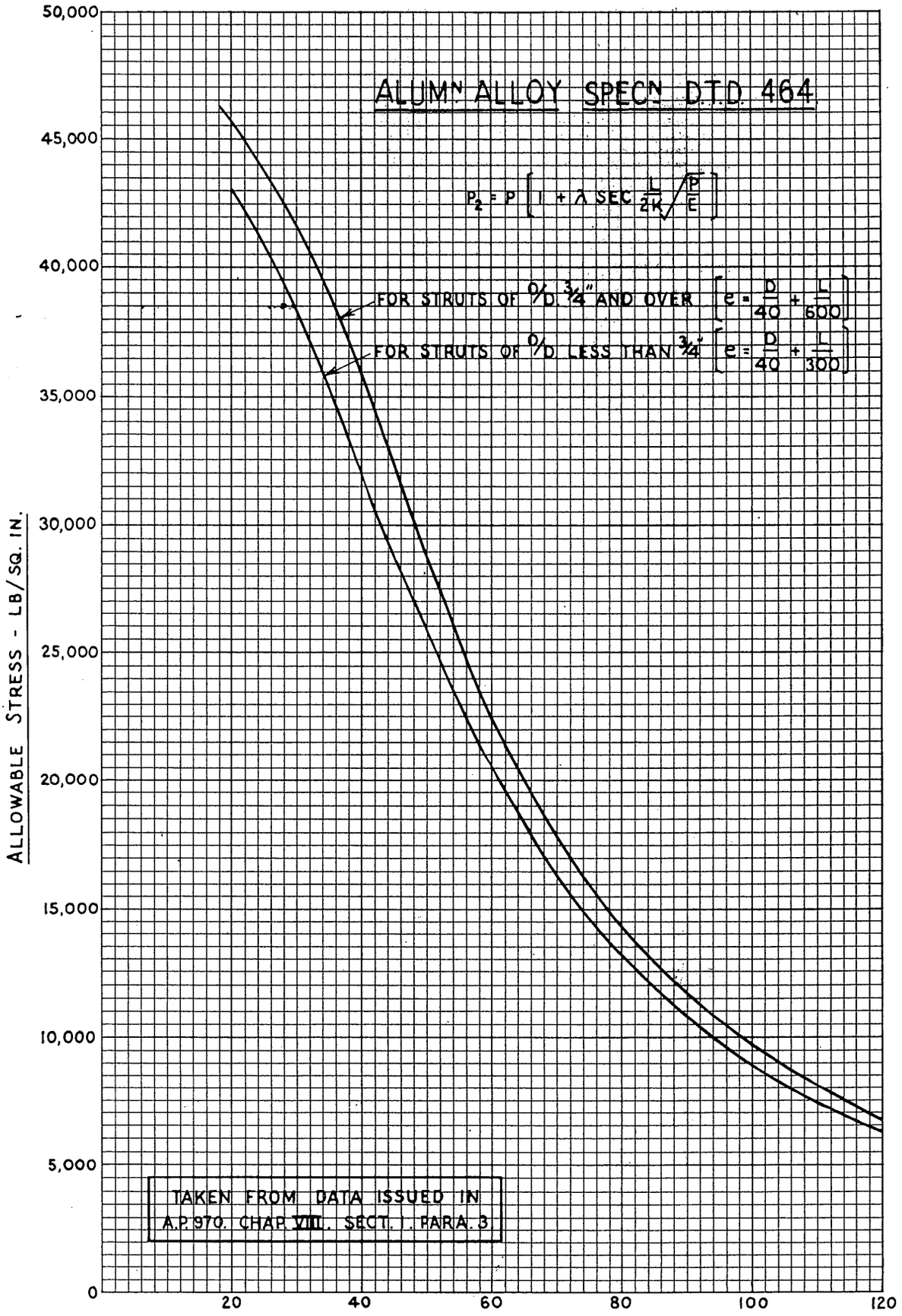


$\frac{L}{K} = \frac{\text{LENGTH OF STRUT BETWEEN PIN CENTRES}}{\text{LEAST RADIUS OF GYRATION OF SECTION.}}$

116

| ISSUE No | DATE |
|---|---|
| 1 | |
| | |
| | |
| | |
| | |
| | |

COMPILED BY
I. C. MILES

TRACED BY
GARNET & Co
30. 12. 46

APPROVED BY
R. H. J. H.

ALLOWABLE STRESS FOR TUBULAR STRUTS WITH PIN JOINTED ENDS.

DESIGN DATA SHEET No III/37.

# THE DE HAVILLAND AIRCRAFT COMPANY LTD., HATFIELD, HERTS

## WOODS.

| Material | Weight per cubic inch | Weight per square ft. |
|---|---|---|
| Ash V.4 | .026 | - |
| Balsa | .005 | - |
| Compressed birch | .038 | - |
| Douglas fir. V.36 | .020 | - |
| Spruce V.37 | .016 | - |
| Birch 3-ply V.3. 1/16 | - | .260 |
| Birch 3-ply V.3. 1/8 | - | .500 |
| Birch 3-ply V.3. 3/16 | - | .750 |
| Birch 3-ply V.3. 1/4 | - | 1.000 |
| Birch 3-ply V.3. 5/16 | - | 1.240 |
| Spruce 3-ply 1/16 | - | .187 |
| Spruce 3-ply 1/8 | - | .365 |

Increase in wt. due to glueing (after drying out)

| | |
|---|---|
| Beetle 'A' cement Ply to spruce, ply to ply, or spruce to spruce | 8 lb/100 sq.ft. |
| Beetle 'AF' cement Ply to spruce, ply to ply, or spruce to spruce | 5 lb/100 sq.ft. |
| Ply to balsa sandwich | 18 lb/100 sq.ft. |

## FLUIDS

| | Weight per gallon |
|---|---|
| Petrol | 7.2 - 7.5 |
| Wide-cut fuel | 7.51 - 8.02 |
| Oil | 9.0 - 9.6 |
| Water | 10.0 |
| Kerosene | 8.0 |
| Glycol (DTD.779) ) De-icing (DTD.406A) ) | 11.1 |
| Water/methanol | 9.0 |

| Material | Weight per foot |
|---|---|
| Cable F.S.W.R. Spec. W9 3 cwt. | .006 |
| Cable F.S.W.R. Spec. W9 5 cwt. | .010 |
| Cable F.S.W.R. Spec. W9 10 cwt. | .021 |
| Cable F.S.W.R. Spec. W9 15 cwt. | .037 |
| Cable F.S.W.R. Spec. W9 20 cwt. | .044 |
| Cable F.S.W.R. Spec. W9 25 cwt. | .053 |
| Cable F.S.W.R. Spec. W9 35 cwt. | .068 |
| Cable F.S.W.R. Spec. W9 45 cwt. | .088 |
| Chain B.S.1. 8 M/M pitch | 0.11 - 0.12 |
| Chain B.S.2. 3/8 pitch | 0.22 - 0.23 |
| Chain B.S.4. 1/2 pitch | 0.20 - 0.23 |
| Chain B.S.6. 1/2 pitch (SPEC. 5.F.16) | 0.3 - 0.39 |
| Shock Absorber Cord 1/4 dia. | .027 |
| Shock Absorber Cord 5/16 dia | .037 |
| Shock Absorber Cord 3/8 dia. | .052 |
| Shock Absorber Cord 1/2 dia. | .100 |
| Shock Absorber Cord 5/8 dia. | .133 |
| Shock Absorber Cord 3/4 dia. | .170 |
| Shock Absorber Cord 7/8 dia. | .250 |

| Material | Weight per cubic inch | Weight per square ft. |
|---|---|---|
| Asbestos-compressed fibre jointing (DTD.378A) | - | .656 |
| Asbestos-compressed fibre with wire mesh insertion (DTD.416) | - | .719 (1/16 thick) |
| Asbestos-resinated commercial | .061 | |
| Bakelite-lam. fab. sheet | 05 average | |
| Cellulose acetate (F.56 transparent) (DTD.315 pigmented) | .047 | |
| Cork jointing (DTD.789) | .032 | - |
| Fabric - 4oz. linen spec. F1 | - | .028 |
| - ditto (doped) | - | .084 |
| Fabric - 2.25oz. Cotton spec DTD.343 (madapollam) | - | .015 |
| Felt | .0052-.023 | |
| Ferodo - Bonrest | .065 | |
| Fibre-red | .049 | |
| Fibre-grey vul, sheet (F.60, BSS.216) | .043 | |
| Fibre-glass ½"blanket | - | .42 |
| Fibre-glass resinated cloth | .06 - .067 | |
| Glass-safety windscreen panels (DTD.402) | .092 | - |
| Hallite | .073 | - |
| Langite (DTD.789) | .012 | - |
| Leather & Basil skin | .034 | - |
| Neo-k-tex. grade A.M. | .031 | - |
| Nylon | .042 | - |
| Paint - Primer | - | .007 |
| - Finish | - | .013 |
| Paper base sheet jointing (DTD.776) | - | .035 (.01 thick) |
| Perspex. (DTD.339A) | .043 | - |
| Polythene | .035 | - |
| Polyvinyl Chloride | .047 | |
| Rubber - sponge | .009-.035 | - |
| Rubber - Linatex | .0347 | - |
| Rubber - Dunlop & Avon | .034-.064 | N.B. Density is not accurately related to Shore Hardness. |

All weights are given in pounds.

FURTHER WEIGHT DATA, INCLUDING WEIGHTS OF A.S. PARTS, ARE AVAILABLE IN THE S.B.A.C. DRAWING OFFICE HANDBOOK, VOLUME III, PART I.

Approximate weights of other equipment may be found often in the relevant S.D.M. e.g.
For weights of electric cables see S.D.M.15.

| ISSUE Nº | DATE |
|---|---|
| 1 | MAR.'55 |
| | |
| | |
| | |
| COMPILED | |
| | |
| TRACED | |
| | |
| APPROVED | |

# WEIGHT DATA

DRAWING OFFICE DATA SHEET Nº III/39A

# THE DE HAVILLAND AIRCRAFT COMPANY LTD., HATFIELD, HERTS.

WEIGHTS OF SHEET METAL IN LBS. PER SQ.IN. (LBS.PER.SQ.FT.)

| S.W.G. | NOMINAL THICKNESS | Dural or Alclad | Alum L.16 L.59 | Magnesium Alloy | Steel | Inconel Brass. | Copper | Titanium. |
|---|---|---|---|---|---|---|---|---|
| 1. | .300 | .0304 (4.385) | .02925 (4.412) | .01890 (2.721) | .08492 (12.222) | .0914 (13.2) | .095 (13.69) | .049 (7.05) |
| 2. | .276 | .0280 (4.032) | .02691 (3.875) | .01739 (2.504) | .07811 (11.246) | .0841 (12.12) | .0875 (12.6) | .0447 (6.44) |
| 3. | .252 | .0256 (3.681) | .02458 (3.540) | .01588 (2.288) | .07132 (10.269) | .0769 (11.50) | .0799 (11.4) | .040 (5.76) |
| 4. | .232 | .0235 (3.390) | .02262 (3.257) | .01462 (2.105) | .06566 (9.452) | .0715 (10.29) | .0739 (10.64) | .0377 (5.43 |
| 5. | .212 | .0215 (3.100) | .02068 (2.978) | .01366 (1.923) | .06000 (8.639) | .0646 (9.3) | .0685 (9.86) | .0344 (4.95) |
| 6. | .192 | .0195 (2.805) | .01872 (2.696) | .01209 (1.741) | .05434 (7.822) | .0585 (8.4) | .0610 (8.7) | .0310 (4.46) |
| 7. | .176 | .0178 (2.572) | .01716 (2.471) | .01108 (1.596) | .04982 (7.170) | .0536 (7.7) | .0560 (8.06) | .0285 (4.10) |
| 8. | .16 | .0162 (2.340) | .01560 (2.247) | .01008 (1.452) | .0453 (6.519) | .0487 (7.01) | .0509 (7.3) | .0259 (3.73) |
| 9. | .144 | .0146 (2.105) | .01404 (2.022) | .00907 (1.306) | .0408 (5.867) | .0440 (6.34) | .0455 (6.55) | .0229 (3.29) |
| 10. | .128 | .0130 (1.870) | .01248 (1.798) | .00806 (1.160) | .0362 (5.215) | .0390 (5.616) | .0396 (5.7) | .0206 (2.97) |
| 11. | .116 | .0118 (1.696) | .01132 (1.630) | .00731 (1.052) | .0328 (4.726) | .0353 (5.08) | .0359 (5.16) | .0190 (2.74) |
| 12. | .104 | .0106 (1.520) | .01014 (1.460) | .00655 (.9430) | .0294 (4.238) | .0319 (4.594) | .0330 (4.75) | .0166 (2.39) |
| 13. | .092 | .0093 (1.345) | .00897 (1.291) | .005795 (.8350) | .0260 (3.748) | .0317 (3.70) | .0292 (4.2) | .0149 (2.15) |
| 14. | .080 | .0081 (1.170) | .00780 (1.123) | .00504 (.7255) | .0227 (3.260) | .0246 (3.442) | .0255 (3.67) | .0130 (1.87) |
| 15. | .072 | .0073 (1.053) | .00702 (1.014) | .004535 (.6530) | .0204 (2.934) | .0258 (3.160) | .0226 (3.25) | .0114 (1.64) |
| 16. | .064 | .0065 (.935) | .00624 (.898) | .004032 (.5806) | .0181 (2.608) | .0196 (2.828) | .0204 (2.94) | .0103 (1.48) |
| 17. | .056 | .0057 (.819) | .00546 (.786) | .003538 (.5082) | .0159 (2.282) | .0171 (2.46) | .0179 (2.57) | .0091 (1.31) |
| 18. | .048 | .00487 (.702) | .00468 (.674) | .003024 (.4351) | .0136 (1.956) | .0147 (2.121) | .0153 (2.2) | .0079 (1.14) |
| 19. | .040 | .00406 (.584) | .00390 (.562) | .002520 (.3625) | .0113 (1.630) | .0115 (1.66) | .0127 (1.8) | .00635 (0.922) |
| 20. | .036 | .00366 (.526) | .00351 (.505) | .002268 (.3260) | .0102 (1.467) | .0111 (1.598) | .0114 (1.64) | .00575 (0.835) |
| 21. | .032 | .00325 (.468) | .00312 (.449) | .002016 (.2900) | .0091 (1.304) | .0098 (1.400) | .0102 (1.47) | .00515 (0.749) |
| 22. | .028 | .00284 (.409) | .00273 (.393) | .001764 (.2539) | .0079 (1.141) | .0086 (1.238) | .0089 (1.28) | .00455 (0.662) |
| 23. | .024 | .00244 (.351) | .00234 (.337) | .001512 (.2176) | .0068 (.978) | .0073 (1.05) | .0075 (1.08) | .0039 (0.562) |
| 24. | .022 | .00223 (.322) | .002145 (.309) | .001316 (.1995) | .0062 (.896) | .0068 (.979) | .00687 (.989) | .00354 (0.504) |
| 25. | .020 | .00203 (.292) | .00195 (.2808) | .001260 (.1814) | .0057 (.815) | .0062 (.885) | .0064 (.920) | .00322 (0.460) |
| 26. | .018 | .0018 (.263) | .001755 (.2528) | .001134 (.1634) | .0051 (.733) | .0055 (.792) | .00575 (.820) | .00292 (0.418) |
| 27. | .0164 | .00166 (.239) | .001599 (.2303) | .001033 (.1488) | .0046 (.668) | .00495 (.700) | .00515 (.740) | .00263 (0.374) |
| 28. | .0148 | .00150 (.216) | .001443 (.2078) | .000932 (.1342) | .0042 (.603) | .0045 (.648) | .00475 (.680) | .00237 (0.345) |
| 29. | .0136 | .00138 (.199) | .001326 (.1909) | .000857 (.1234) | .0039 (.554) | .0042 (.605) | .00437 (.629) | .00223 (0.317) |
| 30. | .0124 | .00126 (.181) | .001209 (.1741) | .000781 (.1124) | .0035 (.505) | .0038 (.547) | .0041 (.590) | .00200 (0.288) |

METAL DENSITIES.

| | Specific Gravity. | Weight lb. cu.in. | | Specific Gravity. | Weight lb. cu.in. |
|---|---|---|---|---|---|
| Alclad and Dural. | 2.8 | .1015 | Magnesium. | 1.74 | .063 |
| Aluminium. | 2.7 | .0975 | Mag. Alloys. | 1.8 | .065 |
| Aluminium Bronze. | 8.13 | .293 | Light Alloys. | 2.63 | .095 |
| Aluminium Manganese. | 2.7 | .0975 | Nickel. | 8.81 | .318 |
| Brass and Inconel. | 8.5 | .307 | Phosphor Bronze. | 8.85 | .319 |
| Bronze. | 8.54 | .308 | Solder. | 9.4 | .34 |
| Copper. | 8.82 | .318 | Steel. | 7.85 | .283 |
| Immadium Bronze. | 7.8 | .280 | Tin. | 7.29 | .263 |
| Iron Cast. | 7.2 | .260 | Titanium. | 4.49 | .162 |
| Iron Wrought. | 7.85 | .283 | Tungum. | 8.43 | .304 |
| Lead. | 11.37 | .410 | Zinc. | 7.00 | .253 |

Due to impurities in commercial lead the figure .37 to .39 lbs.cu.in. should be used for ballast weights.

| ISSUE Nº | DATE |
|---|---|
| 1 | MAR.'55 |

COMPILED

TRACED

APPROVED

DRAWING OFFICE DATA SHEET Nº III/39B

# WEIGHT DATA

# THE DE HAVILLAND AIRCRAFT COMPANY LTD. HATFIELD, HERTS.

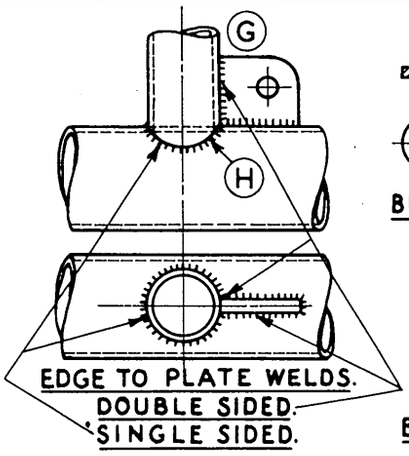


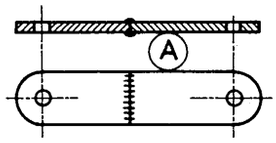


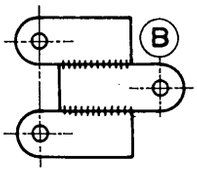


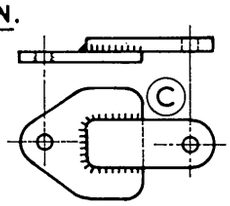


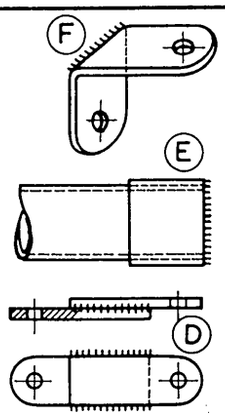


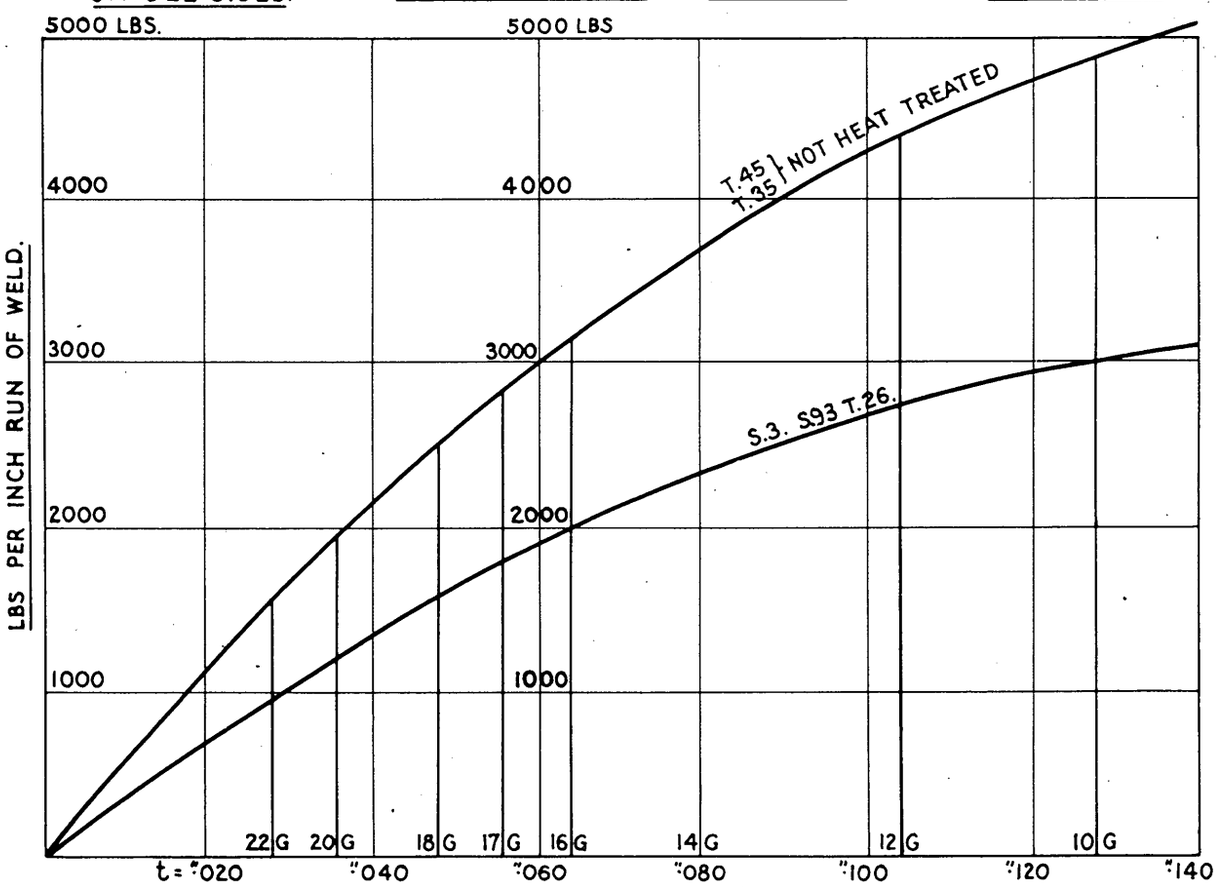


THE CURVES GIVE THE STRENGTH IN LBS PER INCH RUN OF WELDING FOR VARIOUS STEELS AND GAUGES. THE THICKNESS "t" IS TO BE TAKEN AS THE THINNER OF THE PLATES THAT ARE WELDED TOGETHER.

IN THE CASE OF THE DOUBLE SIDED EDGE TO PLATE WELD AS AT "G" "t" IS TO BE TAKEN AS DOUBLE THE THICKNESS OF THE CONTINUOUS PLATE OR THE SINGLE THICKNESS OF THE EDGE PLATE WHICHEVER IS THE SMALLER.

BUTT WELDING IN TENSION AS AT "A" MUST NOT BE USED FOR ATTACHING MAIN STRUCTURAL MEMBERS WITHOUT SOME FURTHER REINFORCEMENT. WHEN WELDED BOTH SIDES "t" MAY BE TAKEN AS TWICE THE THICKNESS OF THE THINNER GAUGE.

THE LENGTH OF THE WELD IS THE LENGTH OF THE LINE SHOWN SHADED ON THE DRAWING THUS:- ++++++++++++ THIS SHOULD BE INDICATED IN ALL THREE VIEWS WHERE POSSIBLE AND THE LENGTH OF WELDING DIMENSIONS IN IMPORTANT CASES.

WHEN RE-INFORCING A LUG BY MEANS OF DOUBLING WASHERS, NO WELDING IS TO RUN ACROSS THE LINE OF THE LOAD AND THE WASHERS MUST BE OF THINNER GAUGE THAN THE MAIN PLATE.

THE WELDING SHOULD BE SHOWN THUS :-

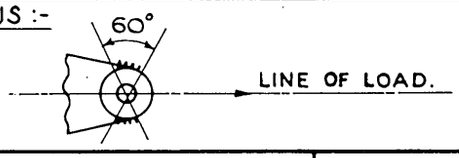


| ISSUE Nº | DATE |
|---|---|
| 1 | |
| 2 | JAN.'53 |
| | |
| | |
| | |
| | |

COMPILED

TRACED
GARNET & Co
26 - 2 - 47

APPROVED

## STRENGTH OF WELDING

DRAWING OFFICE III
DATA SHEET Nº /40

THE DE HAVILLAND AIRCRAFT COMPANY LTD, HATFIELD, HERTS.

(1) D.T.D. 327 RIVETS, MUSHROOM OR SNAP HEAD IN D.T.D. 610 SHEET

| RIVET DIA. | PLATE THICKNESS S.W.G. | | | | | | | |
|---|---|---|---|---|---|---|---|---|
| | 24 | 22 | 20 | 18 | 16 | 14 | 12 | 10 |
| 3/32" | 180 | 200 | 200 | 200 | 200 | | | |
| 1/8" | | 270 | 320 | 320 | 320 | 320 | | |
| 5/32" | | | 460 | 530 | 530 | 530 | 530 | 530 |
| 3/16" | | | | 650 | 730 | 730 | 730 | 730 |
| 1/4" | | | | | 1300 | 1360 | 1400 | 1400 |

| ISSUE Nº | DATE |
|---|---|
| 2 | MAY '50 |
| 3 | JULY '56 |
| | |
| | |
| | |

COMPILED
L. SPENCER.
TRACED
DOLTON DWG. CO. 30. 5. 1950
APPROVED

STRENGTH OF RIVETS L.A. MUSHROOM & SNAP HEAD, IN L.A.

DRAWING OFFICE DATA SHEET Nº III/41

THE DE HAVILLAND AIRCRAFT COMPANY LTD., HATFIELD, HERTS.

## SNAP HEAD, AS.455 MILD STEEL, SPEC. B.S.1109

IN STAINLESS STEEL PLATE SPEC. D.T.D. 166

| RIVET DIA. | PLATE THICKNESS S.W.G. | | | | | | | |
|---|---|---|---|---|---|---|---|---|
| | 24 | 22 | 20 | 18 | 16 | 14 | 12 | 10 |
| 1/8" | | | | 510 | 510 | 510 | | |
| 5/32" | | | | 750 | 750 | 750 | 750 | |
| 3/16" | | | | | 1050 | 1050 | 1050 | 1050 |
| 1/4" | | | | | | 1800 | 1800 | 1800 |

## 90° C.S.K. HEAD, AS.460 MILD STEEL, SPEC. B.S.1109

CUT C'SK IN STAINLESS STEEL PLATE SPEC. D.T.D. 166

| RIVET DIA. | PLATE THICKNESS S.W.G. | | | | | | | |
|---|---|---|---|---|---|---|---|---|
| | 24 | 22 | 20 | 18 | 16 | 14 | 12 | 10 |
| 1/8" | | | | 420 | 420 | 420 | 420 | |
| 5/32" | | | | 620 | 620 | 620 | 620 | 620 |
| 3/16" | | | | | 880 | 880 | 880 | 880 |
| 1/4" | | | | | | 1420 | 1420 | 1420 |

## SNAP HEAD, AS.457 MONEL, SPEC. D.T.D. 204

IN STAINLESS STEEL PLATE SPEC. D.T.D.166

| RIVET DIA. | PLATE THICKNESS S.W.G. | | | | | | | |
|---|---|---|---|---|---|---|---|---|
| | 24 | 22 | 20 | 18 | 16 | 14 | 12 | 10 |
| 1/8" | | | | | 660 | 660 | 660 | 660 |
| 5/32" | | | | | | 1080 | 1080 | 1080 |
| 3/16" | | | | | | | 1540 | 1540 |
| 1/4" | | | | | | | | 2900 |

## 90° C.S.K. HEAD, AS.462 MONEL, SPEC. D.T.D. 204

CUT C'SK. IN STAINLESS STEEL PLATE SPEC. D.T.D. 166

| RIVET DIA. | PLATE THICKNESS S.W.G. | | | | | | | |
|---|---|---|---|---|---|---|---|---|
| | 24 | 22 | 20 | 18 | 16 | 14 | 12 | 10 |
| 1/8" | | | | | 560 | 560 | 560 | 560 |
| 5/32" | | | | | | 920 | 920 | 920 |
| 3/16" | | | | | | | 1210 | 1210 |
| 1/4" | | | | | | | | 2000 |

NOTE:

FIGURES TO THE RIGHT OF THE HEAVY LINE ARE THE SINGLE SHEAR VALUES IN POUNDS

BEARING VALUES MUST BE DISCUSSED WITH THE STRESS OFFICE.

| ISSUE Nº | DATE |
|---|---|
| 1 | JUNE 54 |
| 2 | MAR 55 |

COMPILED

TRACED AEC

APPROVED

STRENGTH OF RIVETS STEEL & MONEL IN STAINLESS STEEL

DRAWING OFFICE DATA SHEET Nº III/41A

# THE DE HAVILLAND AIRCRAFT COMPANY LTD., HATFIELD HERTS.

## SNAP HEAD A.S. 457. MONEL. SPEC. D.T.D. 204
IN TITANIUM COMM^LY PURE SPEC. D.H.A. 67.

| RIVET DIA. | CIVIL | | | | | | | | SERVICE | | | | | | | |
|---|---|---|---|---|---|---|---|---|---|---|---|---|---|---|---|---|
| | PLATE THICKNESS S.W.G. | | | | | | | | PLATE THICKNESS S.W.G. | | | | | | | |
| | 26 | 24 | 22 | 20 | 18 | 16 | 14 | | 26 | 24 | 22 | 20 | 18 | 16 | 14 | |
| 1/8" | 315 | 410 | 540 | 650 | 660 | 660 | 660 | | 315 | 410 | 540 | 650 | 660 | 660 | 660 | |
| 5/32" | | | 630 | 780 | 970 | 1080 | 1080 | | | | 630 | 780 | 970 | 1080 | 1080 | |
| 3/16" | | | | 860 | 1090 | | | | | | | 860 | 1090 | | | |
| | | | | | | | | | | | | | | | | |

## SNAP HEAD A.S. 457. MONEL SPEC. D.T.D. 204
IN 8% MN TITANIUM ALLOY SPEC. D.H.A. 69.

| RIVET DIA. | CIVIL | | | | | | | | SERVICE | | | | | | | |
|---|---|---|---|---|---|---|---|---|---|---|---|---|---|---|---|---|
| | PLATE THICKNESS S.W.G. | | | | | | | | PLATE THICKNESS S.W.G. | | | | | | | |
| | 26 | 24 | 22 | 20 | 18 | 16 | 14 | | 26 | 24 | 22 | 20 | 18 | 16 | 14 | |
| 1/8" | | | 590 | 630 | 660 | 660 | 660 | | | | 590 | 630 | 660 | 660 | 660 | |
| 5/32" | | | 750 | 820 | | | | | | | 750 | 820 | | | | |
| 3/16" | | | | | 1170 | | | | | | | | 1170 | | | |
| | | | | | | | | | | | | | | | | |

## 90° C'SK. HEAD A.S. 462. MONEL SPEC. D.T.D. 204.
IN TITANIUM COMM^LY PURE SPEC D.H.A. 67.

| RIVET DIA. | CIVIL | | | | | | | | SERVICE | | | | | | | |
|---|---|---|---|---|---|---|---|---|---|---|---|---|---|---|---|---|
| | PLATE THICKNESS S.W.G. | | | | | | | | PLATE THICKNESS S.W.G. | | | | | | | |
| | 26 | 24 | 22 | 20 | 18 | 16 | 14 | | 26 | 24 | 22 | 20 | 18 | 16 | 14 | |
| 1/8" | | | | 460 | 520 | | | | | | | 410 | 460 | | | |
| 5/32" | | | | 480 | 620 | | | | | | | 430 | 550 | | | |
| 3/16" | | | | | | | | | | | | | | | | |
| | | | | | | | | | | | | | | | | |

## 90° C'SK. HEAD A.S. 462. MONEL SPEC D.T.D. 204.
IN 8% MN TITANIUM ALLOY SPEC. D.H.A. 69.

| RIVET DIA. | CIVIL | | | | | | | | SERVICE | | | | | | | |
|---|---|---|---|---|---|---|---|---|---|---|---|---|---|---|---|---|
| | PLATE THICKNESS S.W.G. | | | | | | | | PLATE THICKNESS S.W.G. | | | | | | | |
| | 26 | 24 | 22 | 20 | 18 | 16 | 14 | | 26 | 24 | 22 | 20 | 18 | 16 | 14 | |
| 1/8" | | | | 460 | | | | | | | | 410 | | | | |
| 5/32" | | | | 480 | 650 | | | | | | | 430 | 580 | | | |
| 3/16" | | | | | | | | | | | | | | | | |
| | | | | | | | | | | | | | | | | |

NOTE:–
FIGURES TO THE LEFT OF THE HEAVY LINE ARE BEARING VALUES
FIGURES TO THE RIGHT ARE CONSTANT AND ARE THE SINGLE SHEAR VALUES IN POUNDS.

| ISSUE Nº | DATE |
|---|---|
| 2 | AUG.'55 |

COMPILED: BAM.
TRACED: S.K.
APPROVED: AWT.

**STRENTH OF RIVETS** MONEL IN TITANIUM

DRAWING OFFICE DATA SHEET Nº III/41B

# THE DE HAVILLAND AIRCRAFT COMPANY LTD HATFIELD, HERTS

120° C'S'K. HEAD RIVET, A.S.2230. ALUM. ALLOY SPEC. L.69.
BOTH SHEETS SPEC. L.73. BOTH SHEETS DIMPLED.

| RIVET DIAMETER | PLATE THICKNESS S.W.G. | | STRENGTH - LBS. | |
|---|---|---|---|---|
| | OUTER | INNER | CIVIL | MILITARY |
| 1/8" | 22 | 22 | 295 | 270 |
| | 22 | 20 | 335 | 300 |
| | 22 | 18 | 335 | 310 |
| | 20 | 20 | 355 | 355 |
| | 20 | 18 | 390 | 355 |
| | 18 | 18 | 400 | 370 |
| 5/32" | 22 | 22 | 425 | 380 |
| | 22 | 20 | 440 | 390 |
| | 22 | 18 | 485 | 450 |
| | 20 | 20 | 495 | 480 |
| | 20 | 18 | 535 | 505 |
| | 18 | 18 | 570 | 570 |

| ISSUE No. | DATE |
|---|---|
| 1 | MAR.'55 |
| | |
| | |
| | |
| | |
| COMPILED | |
| | |
| TRACED | |
| L. B. | |
| APPROVED | |
| | |

STRENGTH OF L.A. RIVETS - DIMPLED SHT.

DRAWING OFFICE DATA SHEET No. III/41C

THE DE HAVILLAND AIRCRAFT COMPANY LTD., HATFIELD, HERTS.

## 90° C'S'K. HEAD A.S. 2229. LIGHT ALLOY SPEC. L.69
CUT C'S'K. IN ALCLAD SPEC. L.72.

| RIVET DIA. | PLATE THICKNESS S.W.G. | | | | | | | |
|---|---|---|---|---|---|---|---|---|
| | 24 | 22 | 20 | 18 | 16 | 14 | 12 | 10 |
| 3/32" | 170 | 180 | 180 | 180 | 180 | | | |
| 1/8" | | 250 | 290 | 290 | 290 | 290 | | |
| 5/32" | | | 420 | 480 | 480 | 480 | 480 | 480 |
| 3/16" | | | | 600 | 660 | 660 | 660 | 660 |
| 1/4" | | | | | 1200 | 1260 | 1260 | 1260 |

## 120° C'S'K. HEAD A.S. 2230. LIGHT ALLOY SPEC. L.69
CUT C'S'K. IN ALCLAD D.T.D. 687.

| RIVET DIA. | PLATE THICKNESS S.W.G. | | | | | | | |
|---|---|---|---|---|---|---|---|---|
| | 24 | 22 | 20 | 18 | 16 | 14 | 12 | 10 |
| 3/32" | | | | | | | | |
| 1/8" | | | 190 | | | | | |
| 5/32" | | | | 300 | 400 | | | |
| 3/16" | | | | | 460 | | | |
| 1/4" | | | | | | | | |

NOTE:

FIGURES GIVEN ABOVE ARE APPLICABLE TO BOTH CIVIL AND SERVICE AIRCRAFT AND ARE SINGLE SHEAR VALUES IN POUNDS.

GENERAL NOTE ON CUT COUNTERSINKING. REF. AP. 970. LEAFLET 405/2.

CUT COUNTERSINKS SHOULD NOT BE USED ON LIGHT ALLOY SHEETS OF 22 S.W.G. OR THINNER NOR BE USED ON 20 S.W.G. LIGHT ALLOY SHEET IF THIS IS LIKELY TO BE SUBJECT TO PANTING.

| ISSUE No | DATE |
|---|---|
| 1 | JULY '56 |

COMPILED

TRACED L.B.

APPROVED

STRENGTH OF RIVETS. LIGHT ALLOY, CUT C'S'K. IN LIGHT ALLOY

DRAWING OFFICE DATA SHEET No III/41D

THE DE HAVILLAND AIRCRAFT COMPANY LTD. HATFIELD. HERTS.

# "CHOBERT" RIVETS.

D.T.D. 327. RIVETS, SNAP HEAD, PINNED, IN D.T.D.610 SHEET.

| RIVET DIA. | PLATE THICKNESS. S.W.G. | | | | | | | |
|---|---|---|---|---|---|---|---|---|
| | 24 | 22 | 20 | 18 | 16 | 14 | 12 | 10 |
| 1/8" | 140 | 190 | 240 | 280 | 320 | 320 | 320 | 320 |
| 5/32" | 225 | 280 | 330 | 410 | 490 | 530 | 530 | 530 |
| 3/16" | | | 450 | 540 | 610 | 670 | 730 | 730 |
| | | | | | | | | |
| | | | | | | | | |

D.T.D. 327. RIVETS, COUNTERSUNK HEAD, PINNED, IN D.T.D. 610 SHEET.

| RIVET DIA. | PLATE THICKNESS. S.W.G. | | | | | | | |
|---|---|---|---|---|---|---|---|---|
| | 24 | 22 | 20 | 18 | 16 | 14 | 12 | 10 |
| 1/8" | 115 | 160 | 200 | 245 | 280 | 280 | 280 | 280 |
| 5/32" | 170 | 220 | 265 | 320 | 370 | 400 | 420 | 420 |
| 3/16" | | 225 | 285 | 350 | 430 | 500 | 590 | 600 |
| | | | | | | | | |
| | | | | | | | | |

NOTE:

FIGURES TO THE LEFT OF HEAVY LINES ARE BEARING VALUES.
FIGURES TO THE RIGHT ARE CONSTANT AND ARE THE SINGLE SHEAR VALUES. (IN POUNDS.)
FOR DOUBLE SHEAR, USE TWICE THESE VALUES.

| ISSUE No | DATE |
|---|---|
| 1 | |
| | |
| | |
| | |

COMPILED
A.W. Tonny
TRACED
E.G.
APPROVED
R.H.J. Harper

STRENGTH OF "CHOBERT" RIVETS.

DRAWING OFFICE DATA SHEET No III/42

THE DE HAVILLAND AIRCRAFT COMPANY LTD., HATFIELD, HERTS.

## "CHOBERT" C'S'K. HEAD. A.G.S. 2041 MILD STEEL. SPEC. D.T.D. 720 IN ALCLAD SPEC. L.73.

PINNED RIVETS

| RIVET DIA. | CIVIL PLATE THICKNESS, S.W.G. 20 | 18 | 16 | 14 | 12 | 10 | 8 | | SERVICE PLATE THICKNESS, S.W.G. 20 | 18 | 16 | 14 | 12 | 10 | 8 | |
|---|---|---|---|---|---|---|---|---|---|---|---|---|---|---|---|---|
| 1/8" | 290 | 390 | 530 | 570 | 580 | | | | 260 | 340 | 470 | 560 | 580 | | | |
| 5/32" | | 480 | 650 | 820 | 900 | 930 | | | | 430 | 580 | 730 | 900 | 930 | | |
| 3/16" | | | 770 | 960 | 1240 | 1280 | 1310 | | | | 680 | 860 | 1100 | 1260 | 1310 | |
| 1/4" | | | | 1210 | 1610 | 1920 | 2210 | | | | | 1130 | 1460 | 1800 | 2180 | |

## "CHOBERT" C'S'K. HEAD. A.G.S. 2041 MILD STEEL. SPEC. D.T.D. 720 IN ALCLAD SPEC. L.73.

UN-PINNED RIVETS

| RIVET DIA. | CIVIL PLATE THICKNESS, S.W.G. 20 | 18 | 16 | 14 | 12 | 10 | 8 | | SERVICE PLATE THICKNESS, S.W.G. 20 | 18 | 16 | 14 | 12 | 10 | 8 | |
|---|---|---|---|---|---|---|---|---|---|---|---|---|---|---|---|---|
| 1/8" | 290 | 310 | 310 | 310 | 310 | | | | 260 | 300 | 310 | 310 | 310 | | | |
| 5/32" | | 470 | 520 | 530 | 530 | 530 | | | | 420 | 510 | 530 | 530 | 530 | | |
| 3/16" | | | 680 | 700 | 720 | 720 | 720 | | | | 640 | 700 | 720 | 720 | 720 | |
| 1/4" | | | | 970 | 980 | 980 | 980 | | | | | 910 | 970 | 980 | 980 | |

## "CHOBERT" C'S'K. HEAD. A.G.S. 2041 MILD STEEL. SPEC. D.T.D. 720 IN ALCLAD SPEC. D.T.D. 687.

PINNED RIVETS

| RIVET DIA. | CIVIL PLATE THICKNESS, S.W.G. 20 | 18 | 16 | 14 | 12 | 10 | 8 | | SERVICE PLATE THICKNESS, S.W.G. 20 | 18 | 16 | 14 | 12 | 10 | 8 | |
|---|---|---|---|---|---|---|---|---|---|---|---|---|---|---|---|---|
| 1/8" | 320 | 420 | 540 | 570 | 580 | | | | 280 | 370 | 500 | 570 | 580 | | | |
| 5/32" | | 550 | 730 | 860 | 920 | 930 | | | | 490 | 650 | 800 | 920 | 930 | | |
| 3/16" | | | 860 | 1080 | 1240 | 1300 | 1310 | | | | 770 | 960 | 1230 | 1300 | 1310 | |
| 1/4" | | | | 1400 | 1830 | 2080 | 2220 | | | | | 1250 | 1620 | 1980 | 2220 | |

## "CHOBERT" C'S'K. HEAD. A.G.S. 2041 MILD STEEL. SPEC. D.T.D. 720 IN ALCLAD SPEC. D.T.D. 687.

UN-PINNED RIVETS

| RIVET DIA. | CIVIL PLATE THICKNESS, S.W.G. 20 | 18 | 16 | 14 | 12 | 10 | 8 | | SERVICE PLATE THICKNESS, S.W.G. 20 | 18 | 16 | 14 | 12 | 10 | 8 | |
|---|---|---|---|---|---|---|---|---|---|---|---|---|---|---|---|---|
| 1/8" | 300 | 310 | 310 | 310 | 310 | | | | 270 | 310 | 310 | 310 | 310 | | | |
| 5/32" | | 500 | 520 | 530 | 530 | 530 | | | | 460 | 510 | 530 | 530 | 530 | | |
| 3/16" | | | 690 | 710 | 710 | 710 | 710 | | | | 690 | 710 | 710 | 710 | 710 | |
| 1/4" | | | | 970 | 980 | 980 | 980 | | | | | 970 | 980 | 980 | 980 | |

NOTE:

FIGURES TO THE LEFT OF THE HEAVY LINE ARE BEARING VALUES. FIGURES TO THE RIGHT ARE CONSTANT AND ARE SINGLE SHEAR VALUES IN POUNDS.

| ISSUE No. | DATE |
|---|---|
| 1 | JULY '56 |

COMPILED

TRACED L.B.

APPROVED

STRENGTH OF RIVETS "CHOBERT" C'S'K. HD. STEEL IN LIGHT ALLOY

DRAWING OFFICE DATA SHEET No. III/42B

THE DE HAVILLAND AIRCRAFT COMPANY LTD., HATFIELD, HERTS.

## "CHOBERT" SNAP HEAD. A.G.S. 2040 MILD STEEL SPEC. D.T.D. 720 IN ALCLAD SPEC. L.73.

PINNED RIVETS

| RIVET DIA. | PLATE THICKNESS S.W.G. 26 | 24 | 22 | 20 | 18 | 16 | 14 | 12 | 10 |
|---|---|---|---|---|---|---|---|---|---|
| 1/8" | 185 | 220 | 280 | 350 | 450 | 530 | 580 | 580 | 580 |
| 5/32" | | 280 | 350 | 460 | 600 | 770 | 870 | 930 | 930 |
| 3/16" | | | 420 | 540 | 730 | 940 | 1100 | 1260 | 1310 |
| 1/4" | | | | 710 | 960 | 1300 | 1610 | 1920 | 2160 |

## "CHOBERT" SNAP HEAD. A.G.S. 2040 MILD STEEL SPEC. D.T.D. 720 IN ALCLAD SPEC. L.73.

UN-PINNED RIVETS

| RIVET DIA. | PLATE THICKNESS S.W.G. 26 | 24 | 22 | 20 | 18 | 16 | 14 | 12 | 10 |
|---|---|---|---|---|---|---|---|---|---|
| 1/8" | 185 | 220 | 260 | 300 | 310 | 310 | 310 | 310 | 310 |
| 5/32" | | 280 | 350 | 420 | 490 | 530 | 530 | 530 | 530 |
| 3/16" | | | 420 | 540 | 620 | 700 | 720 | 720 | 720 |
| 1/4" | | | | 710 | 840 | 950 | 980 | 980 | 980 |

## "CHOBERT" SNAP HEAD. A.G.S. 2040 MILD STEEL SPEC. D.T.D. 720 IN ALCLAD SPEC. D.T.D. 687.

PINNED RIVETS

| RIVET DIA. | PLATE THICKNESS S.W.G. 26 | 24 | 22 | 20 | 18 | 16 | 14 | 12 | 10 |
|---|---|---|---|---|---|---|---|---|---|
| 1/8" | 195 | 230 | 290 | 380 | 480 | 550 | 580 | 580 | 580 |
| 5/32" | | 300 | 380 | 490 | 640 | 770 | 870 | 930 | 930 |
| 3/16" | | | 440 | 600 | 790 | 990 | 1130 | 1260 | 1310 |
| 1/4" | | | | 780 | 1040 | 1410 | 1690 | 2000 | 2160 |

## "CHOBERT" SNAP HEAD. A.G.S. 2040 MILD STEEL SPEC. D.T.D. 720 IN ALCLAD SPEC. D.T.D. 687.

UN-PINNED RIVETS

| RIVET DIA. | PLATE THICKNESS S.W.G. 26 | 24 | 22 | 20 | 18 | 16 | 14 | 12 | 10 |
|---|---|---|---|---|---|---|---|---|---|
| 1/8" | 195 | 230 | 270 | 300 | 310 | 310 | 310 | 310 | 310 |
| 5/32" | | 300 | 380 | 450 | 500 | 520 | 530 | 530 | 530 |
| 3/16" | | | 440 | 580 | 660 | 700 | 720 | 720 | 720 |
| 1/4" | | | | 780 | 880 | 950 | 970 | 980 | 980 |

NOTE.

FIGURES TO THE LEFT OF THE HEAVY LINE ARE BEARING VALUES.
FIGURES TO THE RIGHT ARE CONSTANT AND ARE SINGLE SHEAR VALUES IN POUNDS.
FIGURES GIVEN ABOVE ARE APPLICABLE TO BOTH CIVIL & SERVICE A/C.

| ISSUE No | DATE |
|---|---|
| 1 | JULY '56 |

COMPILED

TRACED L.B.

APPROVED

STRENGTH OF RIVETS "CHOBERT" SNAP HD STEEL IN LIGHT ALLOY.

DRAWING OFFICE DATA SHEET No III/42C

USE OF NUTS WITH H.T.S. BOLTS. GENERAL.

Medium tensile steel plain or castellated nuts (A27) may be used with H.T.S. Bolts (A25 and similar) in tension.

Thin or slotted nuts must not be used in tension without Stress Office agreement.

H.T.S. nuts must be used on H.T.S. bolts in excess of 55 tons U.T.S. in tension.

Stainless Steel nuts and bolts together should be avoided because of thread galling, particularly where maintenance work is necessary.

Plain or thin L.A. nuts must not be used where there is appreciable tension in the bolt.

USE OF NUTS. COUNTERSUNK BOLTS.

Strength values given on Data Sheets III/43E and F were obtained using plain steel nuts, but L.A. nuts DHS.983 or 202 may be used with DHS.365 - 395 - 965 - 995 bolts without reduction of the values quoted.

If DHS.983 or 202 nuts are used with DHS.358 - 958 bolts, the 'bearing' strengths must be reduced by 10% and the full shank shear strength delayed appropriately.

Thin L.A. nuts DHS.383/E (obsolete, replaced by DHS.983/E) ¼" B.S.F. has standard hexagon dimensions and may be used with the same strength provisos as DHS.983/E or DHS.202/E. DHS.383 nuts, 5/16" - 3/8" etc., have smaller hexagons than standard and are primarily for use with DHS.382 H.T.S. or DHS.901 - 201 L.A. hexagon head shear bolts through thick components or in double shear.

They must not be used with bolts in single shear through thin components without Stress Office agreement.

| ISSUE NO. | DATE |
|---|---|
| 1 | AUG'55 |
| | |
| | |
| | |
| | |
| | |

COMPILED BHN.

TRACED

APPROVED [signature]

# THE DE HAVILLAND AIRCRAFT COMPANY LTD., HATFIELD, HERTS.

## SINGLE SHEAR STRENGTH OF SHANK - LB.

(FOR DOUBLE SHEAR, USE TWICE THE VALUES GIVEN.)

| BOLT | AREA ON FULL DIA. IN.$^2$ | S.1 56,000 LB/IN$^2$ | S.96 81,000 LB/IN$^2$ | S.97 90,000 LB/IN$^2$ | S.98 108,000 LB/IN$^2$ | L.65 35,500 LB/IN$^2$ | DTD 363 47,000 LB/IN$^2$ |
|---|---|---|---|---|---|---|---|
| 6BA | .0095 | 530 | 750 | 850 | 1030 | | |
| 4BA | .0159 | 890 | 1280 | 1430 | 1710 | | |
| 2BA | .0269 | 1500 | 2120 | 2420 | 2900 | | |
| 1/4 | .0491 | 2750 | 3980 | 4420 | 5300 | 1740 | 2300 |
| 5/16 | .0767 | 4290 | 6180 | 6900 | 8280 | 2720 | 3600 |
| 3/8 | .1105 | 6200 | 8940 | 9940 | 11930 | 3920 | 5190 |
| 7/16 | .1503 | 8420 | 12100 | 13520 | 16200 | | |
| 1/2 | .1964 | 11000 | 15850 | 17700 | 21200 | | |
| 9/16 | .2485 | 13900 | 20000 | 22300 | 26800 | | |
| 5/8 | .3068 | 17200 | 24800 | 27600 | 33100 | | |
| 11/16 | .3712 | 20800 | 29900 | 33400 | 40000 | | |
| 3/4 | .4418 | 24700 | 35600 | 39800 | 47700 | | |
| 13/16 | .5193 | 29100 | 42000 | 46700 | 56000 | | |
| 7/8 | .6013 | 33700 | 48700 | 54200 | 64900 | | |
| 15/16 | .6915 | 38700 | 56000 | 62200 | 74600 | | |
| 1 | .7854 | 44000 | 63600 | 70700 | 84800 | | |

## TENSION STRENGTH ON CORE DIAMETER - LB.

| BOLT | AREA ON CORE DIA. IN.$^2$ | S.1 79,000 LB/IN$^2$ | S.96 123,000 LB/IN$^2$ | S.97 146,000 LB/IN$^2$ | S.98 168,000 LB/IN$^2$ | L.65 67,000 LB/IN$^2$ | DTD 363 85,000 LB/IN$^2$ |
|---|---|---|---|---|---|---|---|
| 6BA | .0057 | 440 | 700 | 830 | 960 | | |
| 4BA | .0096 | 750 | 1180 | 1400 | 1610 | | |
| 2BA | .0170 | 1330 | 2090 | 2480 | 2860 | | |
| 1/4 BSF | .0316 | 2480 | 3890 | 4610 | 5310 | 2120 | 2690 |
| 5/16 BSF | .0508 | 3970 | 6250 | 7420 | 8550 | 3400 | 4310 |
| 3/8 BSF | .0760 | 5960 | 9350 | 11100 | 12800 | 5090 | 6460 |
| 7/16 BSF | .1054 | 8260 | 13000 | 15400 | 17700 | | |
| 1/2 BSF | .1385 | 10800 | 17000 | 20200 | 23300 | | |
| 9/16 BSF | .1828 | 14300 | 22500 | 26700 | 30700 | | |
| 5/8 BSF | .2235 | 17500 | 27500 | 32700 | 37600 | | |
| 3/4 BSF | .3250 | 25400 | 40000 | 47500 | 54600 | | |
| 7/8 BSF | .4520 | 35700 | 55600 | 66000 | 76000 | | |
| 1 BSF | .5972 | 47200 | 73500 | 87200 | 100000 | | |

| Issue No. | Date |
|---|---|
| 1 | AUG '55 |
| 2 Awt. | JULY '56 |

Compiled: BAN

Traced:

Approved: Awt.

STRENGTH OF BOLTS.

DESIGN DATA III/ SHEET NO. 43B

THE DE HAVILLAND AIRCRAFT COMPANY LTD., HATFIELD, HERTS.

PLATE BEARING STRENGTH - LB.-PER. 10,000 LB/IN$^2$ BEARING STRESS.

| Shank Diameter | 26 SWG .018 | 24 SWG .022 | 22 SWG .028 | 20 SWG .036 | 19 SWG .040 | 18 SWG .048 | 17 SWG .056 | 16 SWG .064 | 14 SWG .080 | .10 | 12 SWG .104 | 10 SWG .128 | .15 | 8 SWG .16 |
|---|---|---|---|---|---|---|---|---|---|---|---|---|---|---|
| 6BA | 19 | 24 | 30 | 39 | 43 | 51 | 60 | 69 | 86 | 107 | 112 | | | |
| 4BA | 25 | 31 | 39 | 50 | 56 | 67 | 78 | 89 | 111 | 139 | 144 | 178 | | |
| 2BA | 33 | 40 | 51 | 66 | 73 | 87 | 102 | 116 | 146 | 182 | 189 | 235 | 275 | 280 |
| 1/4" | 45 | 55 | 70 | 90 | 100 | 120 | 140 | 160 | 200 | 250 | 260 | 320 | 375 | 400 |
| 5/16" | 56 | 69 | 87 | 113 | 125 | 150 | 175 | 200 | 250 | 313 | 325 | 400 | 470 | 500 |
| 3/8" | 68 | 83 | 105 | 135 | 150 | 180 | 210 | 240 | 300 | 375 | 390 | 480 | 560 | 600 |
| 7/16" | 79 | 96 | 122 | 158 | 175 | 210 | 245 | 280 | 350 | 438 | 455 | 560 | 655 | 700 |
| 1/2" | 90 | 110 | 140 | 180 | 200 | 240 | 280 | 320 | 400 | 500 | 520 | 640 | 750 | 800 |
| 5/8" | 112 | 137 | 175 | 225 | 250 | 300 | 350 | 400 | 500 | 575 | 650 | 800 | 940 | 1000 |
| 3/4" | 135 | 165 | 210 | 270 | 300 | 360 | 420 | 480 | 600 | 750 | 780 | 960 | 1125 | 1200 |
| 7/8" | 157 | 192 | 245 | 315 | 350 | 420 | 490 | 560 | 700 | 875 | 910 | 1120 | 1310 | 1400 |
| 1" | 180 | 220 | 280 | 360 | 400 | 480 | 560 | 640 | 800 | 1000 | 1040 | 1280 | 1500 | 1600 |

NOTES.

1. The above figures are calculated for a bearing stress of 10,000 lb./in$^2$ and should be multiplied by the appropriate factor for any given material. A list of multiplication factors for various materials is given below.
2. The above figures or their multiples must not be used if the limiting conditions given on Design Data Sht. 111/1C are exceeded.
3. Bolt shear strength must also be considered.

MULTIPLICATION FACTORS FOR VARIOUS MATERIALS.

| MATERIAL | | CIVIL | MILITARY |
|---|---|---|---|
| S. 3 | Welded | 8.1 | 7.2 |
| | Unwelded | 9.9 | 8.7 |
| S. 84 | Welded | 6.0 | 5.4 |
| | Unwelded | 6.3 | 5.6 |
| DTD. 124 | Annealed | 12.5 | 11.2 |
| | Hard$^d$. & Temp$^d$. | 19.0 | 18.6 |
| DTD. 137 | Tempered | 25.8 | 25.8 |
| DTD. 138 | Tempered | 32.3 | 32.3 |
| DTD. 571 | | 6.5 | 5.8 |
| DTD. 493 | | 6.5 | 5.8 |
| DTD. 166 | | | |
| | Unwelded | 20.2 | 17.9 |
| BS. 265 | | 5.6 | 4.9 |
| BS. 899 | | 3.8 | 3.35 |

| MATERIAL | | CIVIL | MILITARY |
|---|---|---|---|
| L. 71 | | 11.9 | 11.0 |
| L. 72 | <¼" thick | 8.7 | 7.8 |
| | >¼" thick | 8.3 | 7.4 |
| DTD. 710 | | 8.7 | 7.8 |
| L. 73 | | 11.4 | 10.5 |
| DTD. 746 | >16 SWG. | 11.4 | 10.1 |
| | 17-19 SWG. | 11.0 | 9.6 |
| | 20-24 SWG. | 10.3 | 9.2 |
| DTD. 687 | >20 SWG. | 13.7 | 13.4 |
| | <20 SWG. | 13.2 | 13.0 |
| L. 59 | Welded | 1.52 | 1.34 |
| | Unwelded | 4.7 | 3.6 |
| L. 61 | Welded | 1.52 | 1.34 |
| | Unwelded | 2.0 | 1.8 |
| DTD. 606 | | 2.8 | 2.6 |
| L. 16 | Welded | 0.74 | 0.67 |
| | Unwelded | 2.9 | 2.6 |
| DTD. 118 | Unwelded | 1.8 | 1.8 |
| DTD. 259 | | 3.9 | 3.9 |

| Issue No. | Date |
|---|---|
| 1 | AUG.'55 |

Compiled BRN.

Traced.

Approved. AWT.

BOLT, BEARING STRENGTHS

DESIGN DATA SHEET NO. III/43C

## COMBINED SHEAR AND TENSION ON STANDARD BOLTS

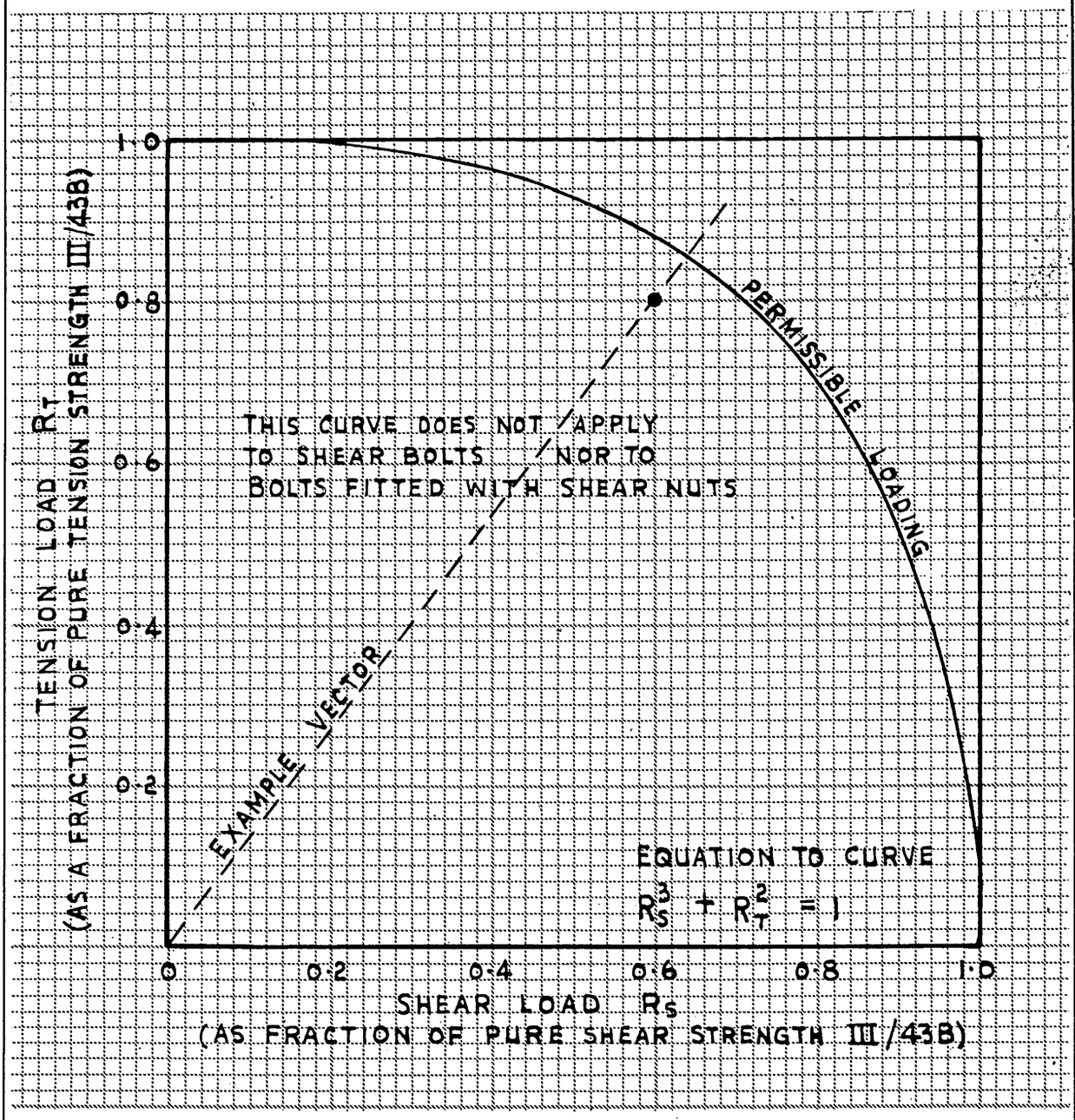


EXAMPLE.

1/4" DIA. H.T.S. BOLT A25 WITH A27 ORDINARY NUT

APPLIED TENSION = 3110 lb. $\therefore R_T = \frac{3110}{3890} = 0{\cdot}80$

APPLIED SHEAR/FACE = 2390 lb. $\therefore R_S = \frac{2390}{3980} = 0{\cdot}60$

CONSTRUCT VECTOR AS SHOWN AND OBTAIN RESERVE FACTOR BY COMPARING VECTOR PERMISSIBLE TO VECTOR APPLIED.

R.F. = 1·07

| Issue No. | Date |
|---|---|
| 1 | JULY '56 |

Compiled BRN.

Traced

Approved AWT.

THE DE HAVILLAND AIRCRAFT COMPANY LTD., HATFIELD, HERTS.

## 90° COUNTERSUNK HEAD

| BOLT DIA. | PLATE SPEC. D.T.D. 687 | A.S.1242 STRAIGHT SLOT SPEC. S.96 | A.S. 3294 "PHILLIPS" RECESS SPEC. S.105 | D.H.S. 358 PLUNGE MILLED SLOT SPEC. S.96 | D.H.S.481 PLUNGE MILLED SLOT SPEC. S.98 | |
|---|---|---|---|---|---|---|
| 2 B.A. | ·064 16SWG | 810 | 1130 | 1370 | | |
| | ·080 14SWG | 1140 | 1240 | 1430 | | |
| | ·104 12SWG | 1690 | 1780 | 1840 | | |
| | ·128 10SWG | | | | | |
| 1/4" | ·080 14SWG | 1440 | | 1820 | | |
| | ·104 12SWG | 1770 | 2280 | 2220 | | |
| | ·128 10SWG | 2320 | 2650 | 2710 | | |
| | ·150 | | | 3880 | | |
| | ·200 | | | 3980 | | |
| | ·250 | | | 3980 | | |
| 5/16" | ·104 12SWG | 2350 | | 2820 | | |
| | ·128 10SWG | 2620 | 3730 | 3320 | | |
| | ·150 | | | 4560 | | |
| | ·200 | | | 5860 | | |
| | ·250 | | | 6180 | 7050 | |
| 3/8" | ·128 10SWG | | | 3970 | | |
| | ·150 | | | 4900 | | |
| | ·200 | | | 6590 | | |
| | ·250 | | | 8940 | | |

## 120° COUNTERSUNK HEAD

| BOLT DIA. | SHEET OR PLATE SPEC. D.T.D. 687 | A.S.3297 "PHILLIPS" RECESS SPEC. S.105 | D.H.S.365 PLUNGE MILLED SLOT SPEC. S.96 | D.H.S. 395 PLUNGE MILLED SLOT-SEALED SPEC. S.96 | D.H.S.492 PLUNGE MILLED SLOT SPEC. S.98 | D.H.S.498 PLUNGE MILLED SLOT-SEALED SPEC. S.98 |
|---|---|---|---|---|---|---|
| 2 B.A. | ·064 16SWG | 1120 | 1010 | | | |
| | ·080 14SWG | 1430 | 1260 | | | |
| | ·104 12SWG | 1780 | 1950 | | | |
| | ·128 10SWG | | 2120 | | | |
| 1/4" | ·080 14SWG | 1360 | 1790 | 1630 | | |
| | ·104 12SWG | 2170 | 2920 | 2330 | | |
| | ·128 10SWG | 2860 | 3630 | 3170 | | |
| | ·150 | | 3980 | 3500 | | |
| | ·200 | | 3980 | 3980 | | |
| | ·250 | | 3980 | 3980 | | |
| 5/16" | ·104 12SWG | 2280 | 2990 | 2610 | | |
| | ·128 10SWG | 3060 | 3860 | 3550 | | |
| | ·150 | | 4950 | 4410 | | |
| | ·200 | | 6180 | 6180 | | |
| | ·250 | | 6180 | 6180 | 8180 | 7580 |
| 3/8" | ·128 10SWG | | 4160 | 3720 | | |
| | ·150 | | 5600 | 4900 | | |
| | ·200 | | 8100 | 7370 | | |
| | ·250 | | 8940 | 8850 | | |

| ISSUE No. | DATE |
|---|---|
| 1 | AUG. '55 |
| 2 | JULY '56 |

COMPILED BAN

TRACED L.B.

APPROVED AWC.

VALUES ARE SINGLE SHEAR IN POUNDS AND DERIVE FROM TESTS USING EQUAL THICKNESS D.T.D. 687 SHEET (OR D.H.A.380 PLATE). FOR BOLTS BEARING IN L.A. MATERIAL OTHER THAN D.T.D. 687, RATIO ACCORDING TO PERMISSIBLE BEARING STRESSES. APPROPRIATE COUNTERSINKS D.H.S. 526 - 548 - 556 MUST BE USED. SEE ALSO III/43A. USE OF NUTS.

STRENGTH OF C'S'K. HEAD H.T.S. BOLTS. — CIVIL

DRAWING OFFICE DATA SHEET No. III/43E

THE DE HAVILLAND AIRCRAFT COMPANY, LTD., HATFIELD, HERTS.

## 90° COUNTERSUNK HEAD

| BOLT DIA. | PLATE SPEC. D.T.D.687 | A.S.1242 STRAIGHT SLOT SPEC. S.96 | A.S.3294 "PHILLIPS" RECESS SPEC. S.105 | D.H.S.358 PLUNGE MILLED SLOT SPEC. S.96 | D.H.S.481 PLUNGE MILLED SLOT SPEC. S.98 | |
|---|---|---|---|---|---|---|
| 2 B.A. | ·064 16SWG | 720 | 1000 | 1220 | | |
| | ·080 14SWG | 1010 | 1100 | 1270 | | |
| | ·104 12SWG | 1500 | 1580 | 1630 | | |
| 1/4" | ·080 14SWG | 1280 | | 1620 | | |
| | ·104 12SWG | 1570 | 2030 | 1970 | | |
| | ·128 10SWG | 2060 | 2360 | 2410 | | |
| | ·150 | | | 3450 | | |
| | ·200 | | | 3850 | | |
| | ·250 | | | 3980 | | |
| 5/16" | ·104 12SWG | 2090 | | 2500 | | |
| | ·128 10SWG | 2330 | 3320 | 2950 | | |
| | ·150 | | | 4060 | | |
| | ·20 | | | 5220 | | |
| | ·25 | | | 5980 | 6280 | |
| 3/8" | ·128 10SWG | | | 3530 | | |
| | ·150 | | | 4360 | | |
| | ·200 | | | 5850 | | |
| | ·250 | | | 8060 | | |

## 120° COUNTERSUNK HEAD

| BOLT DIA. | SHEET OR PLATE SPEC. D.T.D. 687 | A.S. 3297 "PHILLIPS" RECESS SPEC. S.105 | D.H.S. 365 PLUNGE MILLED SLOT SPEC. S.96 | D.H.S. 395 PLUNGE MILLED SLOT-SEALED SPEC. S.96 | D.H.S. 492 PLUNGE MILLED SLOT SPEC. S.98 | D.H.S. 498 PLUNGE MILLED SLOT-SEALED SPEC. S.98 |
|---|---|---|---|---|---|---|
| 2 B.A. | ·064 16SWG | 990 | 900 | | | |
| | ·080 14SWG | 1270 | 1120 | | | |
| | ·104 12SWG | 1580 | 1730 | | | |
| 1/4" | ·080 14SWG | 1210 | 1590 | 1450 | | |
| | ·104 12SWG | 1950 | 2590 | 2070 | | |
| | ·128 10SWG | 2540 | 3230 | 2820 | | |
| | ·150 | | 3660 | 3100 | | |
| | ·200 | | 3980 | 3980 | | |
| | ·250 | | 3980 | 3980 | | |
| 5/16" | ·080 14SWG | | | | | |
| | ·104 12SWG | 2030 | 2650 | 2320 | | |
| | ·128 10SWG | 2720 | 3430 | 3150 | | |
| | ·150 | | 4400 | 3920 | | |
| | ·200 | | 5970 | 5460 | | |
| | ·250 | | 6180 | 6180 | 7260 | 6750 |
| 3/8" | ·128 10SWG | | 3700 | 3310 | | |
| | ·150 | | 4980 | 4350 | | |
| | ·200 | | 7200 | 6550 | | |
| | ·250 | | 8290 | 7860 | | |

| ISSUE No. | DATE |
|---|---|
| 1 | AUG '55 |
| 2 | JULY '56 |

COMPILED BAN

TRACED L.B.

APPROVED AWT.

VALUES ARE SINGLE SHEAR IN POUNDS AND DERIVE FROM TESTS USING EQUAL THICKNESS D.T.D. 687 SHEET (OR D.H.A. 380 PLATE). FOR BOLTS BEARING IN L.A. MATERIAL OTHER THAN D.T.D. 687, RATIO ACCORDING TO PERMISSIBLE BEARING STRESSES. APPROPRIATE COUNTERSINKS D.H.S. 526 - 548 - 556 MUST BE USED. SEE ALSO III/43A. USE OF NUTS.

STRENGTH OF C'S'K. HEAD H.T.S. BOLTS — SERVICE

DRAWING OFFICE DATA SHEET No. III/43F

THE DE HAVILLAND AIRCRAFT COMPANY LTD., HATFIELD, HERTS.

| BOLT DIA. | SHEET THICKNESS | SINGLE SHEAR STRENGTH - LB. | | | | | |
|---|---|---|---|---|---|---|---|
| | | CIVIL | | | SERVICE | | |
| | | DHS. 363 DTD. 687 SHEET | DHS. 363 DTD. 746 SHEET | DHS. 393 DTD. 687 SHEET | DHS. 363 DTD. 687 SHEET | DHS. 363 DTD. 746 SHEET | DHS. 393 DTD. 687 SHEET |
| 1/4" | .080 | 1610 | 1610 | 1390 | 1470 | 1430 | 1240 |
| | .104 | 1990 | 1990 | 1760 | 1990 | 1890 | 1760 |
| | .128 | 2190 | 2190 | 2190 | 2190 | 2190 | 2070 |
| | .150 | 2300 | 2300 | 2300 | 2300 | 2300 | 2300 |
| | .20 | 2300 | 2300 | 2300 | 2300 | 2300 | 2300 |
| | .25 | 2300 | 2300 | 2300 | 2300 | 2300 | 2300 |
| 5/16" | .080 | | DO NOT USE | | | | |
| | .104 | 2640 | 2480 | 2280 | 2490 | 2350 | 2080 |
| | .128 | 3070 | 2970 | 2740 | 3070 | 2900 | 2740 |
| | .150 | 3300 | 3300 | 3200 | 3300 | 3300 | 3200 |
| | .20 | 3600 | 3600 | 3600 | 3600 | 3600 | 3600 |
| | .25 | 3600 | 3600 | 3600 | 3600 | 3600 | 3600 |

VALUES ARE SINGLE SHEAR IN POUNDS, THEY DERIVE FROM TESTS USING EQUAL THICKNESS SHEETS, COUNTERSINKING TO DHS. 526 - 556 AND DHS. 202 DHS. 202 NUTS. THE VALUES WILL ALSO APPLY TO DHS. 963 - 993 BOLTS WITH DHS. 983 NUTS.

| ISSUE NO. | DATE |
|---|---|
| 1 | AUG'55 |
| | |
| | |
| | |
| | |
| | |

COMPILED

BRN

TRACED

APPROVED

AWT.

STRENGTH OF L.A. BOLTS
DHS C'S'K. HEAD

DESIGN DATA III/ SHEET NO. 43G

PTY. LTD.