TP 5

Australian Air Publication 721.79

Volume 2, Part 2
Book 1

ROYAL AUSTRALIAN AIR FORCE

VAMPIRE MODIFICATIONS

(Nos 1 to 100)

ISSUED FOR THE INFORMATION AND GUIDANCE OF ALL CONCERNED,

BY COMMAND OF THE AIR BOARD,

Secretary,

DEPARTMENT OF AIR
CANBERRA A C T

VAMPIRE MODIFICATIONS
Nos 1 TO 100

AAP. No 7212-002-100-1

I GORDON JARVIS RANK FSGT

Certify that I have carried out a check of effective pages contained in this publication. It is complete ~~with the exceptions of the following pages.~~

SECTION		CHAPTER		PAGE

SIGNED Gordon Jarvis

~~PHONE~~ DATE 17 May 88

RESTRICTED

TP 5

Australian Air Publication 721.79

Volume 2, Part 2
Book 1

ROYAL AUSTRALIAN AIR FORCE

VAMPIRE MODIFICATIONS

(Nos 1 to 100)

ISSUED FOR THE INFORMATION AND GUIDANCE OF ALL CONCERNED,

BY COMMAND OF THE AIR BOARD,

Secretary,

DEPARTMENT OF AIR
CANBERRA A C T

RESTRICTED

A.A.P. 721.79, Vol. 2, Pt. 2.
(Books 1, 2, 3, 4 and 5)

VAMPIRE MODIFICATIONS

INTRODUCTION

1. Vampire Modifications are now contained in 5 Books as follows:-

Book 1 - Modifications Nos. 1 to 100 inclusive.

Book 2 - Modifications Nos. 101 to 200 inclusive.

Book 3 - Modifications Nos. 201 to 300 inclusive.

Book 4 - Modifications Nos. 301 to 400 inclusive.

Book 5 - Modifications Nos. 401 and subsequent.

2. One series of amendments will cover the five Books and all amendments are to be recorded in the Amendment Certificate contained in Book 1.

3. The index to the complete set of Vampire Modifications is at the front of Book 1.

AMENDMENT CERTIFICATE

CERTIFIED that the amendments promulgated in the undermentioned amendment lists have been made in this publication.

Amendment List No	Amendment List Date	Amendments Made By	Date
See Book I. [signature] 30/5/61			
235	11.12.61	L Alexander Mod 360	25.1.62
236	24.11.61	" " 278	18.1.62
237	4.12.61	" " 307 + 327	5.1.62
238	8.2.62	" " 356	1.3.62
239	16.2.62	" " 352	29.3.62
240	23.3.62	" " 361	8.6.62
241	2.4.62	L. Alexander " 282	2.7.62
242	2.4.62	L. Alexander " 339	8.5.62
243	13.4.62	L. Alexander " 367	24.5.62
244	26.4.62	" " 364	8.6.62
245	30.4.62	" New Index	8.6.62
246	30.5.62	L. Alexander Mod 362	26.6.62
247	23.7.62	L. Alexander " 363	14.8.62
248	30.7.62	" " 365	22.8.62
249	14.8.62	" " 363 Amend	"
250	31.8.62	" " 368	13.11.62
251	3.9.62	B. Lyne " 336	15.8.1966
252	14.9.62	" 372	13.11.62
253	29.10.62	" 366	10.12.62
254	12.10.62	" Amend 356	13.11.62
255	20.11.62	" Mod 369	10.12.62
256	19.12.62	" " 373	21 JAN 1963
257	24.12.62	" " 325	21 JAN 196[illegible]

AAP 721:79, Vol 2, Part 2

AMENDMENT CERTIFICATE

TO

VAMPIRE MODIFICATIONS

Certified that the amendments promulgated in the undermentioned Amendment Lists have been incorporated.

Amendment List		Modification No	How Affected	Amendments Made by	Date
No	Dated				
258	2-1-1963	353	Incorp	[illegible]	[illegible]
259	12-3-"	378	"	"	[illegible]
260	29-3-1963	——	Change Engine	[illegible]	[illegible]
261	19-4-1963	Index Pages 25-28	Incorp	[illegible]	[illegible]
262	29-4-1963	371	"	"	[illegible]
263	29-4-1963	325	Amended	"	[illegible]
264	" " "	361	Amended	"	[illegible]
265	20-5-"	374	Incorp	"	[illegible]
266	21-5-"	354	"	"	[illegible]
267	4-5-"	376	"	"	[illegible]
268	4-6-"	379	"	"	[illegible]
269	7-6-"	391	Amend	"	[illegible]
270	26-8-"	383	Incorp	"	[illegible]
271	15-10-"	381	"	"	[illegible]
R72	10-12-1963	395	Incorp	"	[illegible]
273	10-12-1963	389	"	"	[illegible]
274	9-12-1963				
275	10-2-1964	388	"	"	[illegible]
276	24-2-64	383	Amend	"	[illegible]
277	2-3-64	397	Incorp	"	[illegible]
278	28-2-1964	386	Incorp	"	[illegible]
279	16-3-1964	378 Amend	Amend	Ro Engrs	[illegible]
280	20-4-1964	394	Incorp	[illegible]	[illegible]

(Issued with A/L 256 - December [illegible])

Volume 2

AMENDMENT CERTIFICATE

Amendment List No	Amendment List Dated	Vol 2 Part No Effected	Leaflet No, Inst No, Mod No * and How Effected	Amended By	Date
281	6. 4. 1964	Pt 2	Amend Mod 374	L. Alexander	23. 6. 1964
282	1-6. 1964	"	Mod 389 Dwg A14911-1 added	L. Alexander	10-6. 1964
283	1. 6. 1964	"	" 384 Insert	L. Alexander	29. 6. "
284	29-6-1964	"	" 398 "	G. Clynch	16-7-64
285	20. 7. "	"	" 377 Amend	L. Alexander	30. 7. 1964
286	13. 7. "	"	" 397 Insert	L. Alexander	30. 7. 1964
287	31. 8. "	"	" 382 "	L. Alexander	18-3. 1965
288	26. 10. 1964	2	" 390 Insert	L. Alexander	16. 11. 1964
289	" " "	2	" 401 "	L. Alexander	15. 12. 1964
290 ~~10~~	21. 12. 1964	2	" 354 Amend Para 10	L. Alexander	2-3. 1965
291 ~~11~~	11-1-1965	2	" 391 Insert	L. Alexander	17. 6. 1965
292 ~~12~~	9. 11. "	2	" 407 Insert	L. Alexander	29-1-1965
293	12. 11. 1964	2	" 381 Amend	L. Alexander	15. 12. 1964
294 ~~14~~	24-12. "	2	" 359 Insert	L. Alexander	12. 4. 1965
295 ~~15~~	14-12 "	2	" 393 Insert	L. Alexander	18. 3. 1965
296 ~~16~~	27. 11. 1964	2	" 420 Insert	L. Alexander	29-1-1965
297 ~~17~~	29. 1. 1963	"	" 389 Amend	L. Alexander	18. 3. 1965
298 ~~18~~	15-2-1965	2	" 396 Insert	L. Alexander	14. 4. 1965
299 ~~19~~	25. 1. "	2	" 399 "	L. Alexander	4. 5. "
300 ~~20~~	15. 3. "	2	cancelled by A/L 359. " 405 "	L. Alexander	17. 6. "
301 ~~21~~	" " "	2	" 415 "	L. Alexander	" " "
302 ~~22~~	" " "	2	" 421 "	L. Alexander	" " "
303 ~~23~~	9. 11. 1964	Pt 2	" 392 Insert	L. Alexander	5-4-1965
304 ~~24~~	12. 4. 1965	"	New Index	L. Alexander	17. 6. "
305 ~~25~~	" " "	"	Mod 411 Insert	L. Alexander	" " "

* Note.—Insert as appropriate — Leaflet No/Inst or Mod No, and state effect, eg, Chapter/Para/Page, amended, inserted or cancelled.

306	31-5-65	2	Insert Mod 413	K.A.	17.6.65	
307	" " "	2	" " 424	K.A.	21.6.65.	
308	7.6.65	2	" " 418	KA	12.8.65	
309	" " "	2	Amend Mods 392 & 397	KA	21.6.65	
310	12.7."	2	Amend Mod 421	KA	9.7.65	
311	12.7."	2	Insert Mod 419	KA	9.9.65	
312	19.7."	2	" " 422	KA	" " "	
313	2.8."	2	" " 410	KA	29.9.65	
314	22.7.1965.	2	Amend " 399	Blyne	15.8.1966.	
315	23.8.1965.	2	" " 403.	Blyne	14.3.1966.	
316	23.8.1965.	2	Insert " 412.	Blyne	15.8.1966	
317	23.8.1965.	2	Insert Mod 417.		21.1.1966.	Blyne
318	23.8.1965.	2	" " 427	Blyne	15-8-1966	
319	23.8.1965.	2	" " 370.		21-1-1966.	Blyne
320	13.9.1965	2	" " 380		24.5.1966	
321	13.9.1965.	2	" " 321.		21.1.1966	Blyne
322	18.10.1965.	2	" " 402		26.1.1966	
323	11.11.1965.	2	" " 408		15.8.1966	
324	11.10.1965	2	" " 416		3.2.1967	
325	18.10.1965.	2	" " 429		14.3.1966	
326	13.9.1965.	2	" " 404.		21.1.1966	
328	29.11.65.	2	" " 432		14.6.1966	
329	13.12.1965.	2	Insert Mod 435		26.4.1966	C.P. Brown
330	16.6.1967	2	Insert Mod No. 439		13-6-67	Blyne
331	14.2.1967	2	Insert Mod. 486.		14.2.1967.	C Brown
332	4.4.1966		Amend mod 420		4-5-1966	Blyne
333	24.6.66		Insert Mod 407		20.9.66	Reard
334	23.6.66	2	Amend. Mod. 403.		12-7-1966.	Blyne
335	NOT TO BE ISSUED					
336	1.4.1967	2	Insert Mod No 443		11.4.1967	C Brown
337	19.7.66	2	Insert Mod 437		3.2.67	
338	26.7.66	2	Insert Mod. No. 441.		18.11.1966.	C Brown
339	29.7.66	2	Amend mod No 416		11.4.67	C. Brown
340	29.8.66	2	Insert Mod 438		20-9-66	
341	31-10-66	2	Insert Mod 448		2 Feb 67	E.J. atty
342	30-11-66	2	Amend A/L 335		2 Feb 67	Elizabeth Atty

AAP 721:79, VOLUME 2, PART 2

VAMPIRE AIRCRAFT MODIFICATIONS

NUMERICAL INDEX

Date of Issue 30th April 1962

Note:

1. When the index shows orders to be "Cancelled" or "Superseded", a check of unit copies is to be made to ensure that the word "Cancelled" or "Superseded", as applicable, is written in large block letters across the front page of the order. The amendment list number and a brief reason is also to be noted.

2. To ensure that the particulars of any modification are always available, cancelled or superseded orders are not to be removed from the filing cover.

3. Holders of Modification Orders are to keep the index up to date as new orders and amendment lists are issued.

4. This index supersedes the previous index issued March 1960.

(Issued with A/L 245 - April 1962)

NUMERICAL INDEX

Mod No	Equiv De Hav No	Class	Application	Title	Remarks
1	V2	4	30	Strengthened Nose Wheel Structure - Introduction	Current
2	V1	4	30	Main Undercarriage Leg - Introduction of Strengthened Type	Current
3	V29	4	30	Wing Rib No 2 - Alteration to Accommodate 11 in Stroke Main Undercarriage Leg	Current
4	V28	2	30	Drop Tank Transfer System - Introduction of Additional Pressure Reducing Valve	Superseded by Vampire Mod 116
5	V62	2	30	Wing Ribs 6, 8 & 9 - Reinforcements	Current
6	V48	2	30	Tapered Packing Pieces Under Pulley Brackets on Rear Spar - Introduction	Current
7	V42	2	30	Pneumatic and Hydraulic Lines - Repositioning of No 4 Bulkhead	Current
8	V47	4	30	Introduce Anchor Nuts on Forward Face No 4 Bulkhead	Current
9	V53	2	30	Gun Firing Relays and Fuel Pump Suppressor - Repositioning	Current
10	V65	2	30	Oxygen Bottle - Addition of Labels Re-testing Dates	Current

(Issued with A/L 304)

Mod No	Equiv De Hav No	Class	Application	Title	Remarks
22	V110	2	30 /	Fuel Filler Caps - Change of Material	Current
23		4	30	Fuel Pressure Warning Light Circuit - Connection of Resistance in Positive Leg	Current
24	V75	2	30	20·mm Cannon - Improved Installation	Current
25	V134	2	30	Fuel Tanks - Corners and Fitting Attachment Points Reinforcement	Current
26	V80	2	30	Fuel Tank Vent Bracket - Lengthening	Superseded by Vampire Mod 106
27	V86	2	30	Fuel Tank Vent - Improved Installation	Current
28	V143	2	30	Fuel Transfer System Banjo Pillar - Shortening	Current
29	-	-	-		Cancelled (Not Issued)
30	V120	2	30	Undercarriage Radius Rod Stop Bolt - Wire Locking	Current
31	V118	2	30	Cable Fairlead - Repositioning	Current
32	V109	2	30	Elevator Tab - Additional Rivets	Current
33	V97	2	30	Manufacturer's Label - Introduction of	Current
34	V123	2	30	ASI Pipe Lines - Lengthened Connections	Cancelled by Vampire Mod 146

Mod No	Equiv De. Hav No	Class	Application	Title	Remarks
49	-	2	30,31	Relight Button on HP Cock - Installation	Cancelled by Mod 151
50	V175	2	31	G3F Gyro Magnetic Compass Monitoring Current Isolating Switch - Introduction	Current
51	V151	2	30	Port Inner Blast Tube Flange - Reworking	Current
52	V152	2	30	Label (Hydraulic Accumulator Charging Testing) - Introduction	Current
53	V138	2	30	Pilot's Access Step Cable - Replacing Cord	Current
54	V139	2	30	Rudder Pedal - Improved Attachment of Spring	Current
55	V178	4	30,31	Air Intake and Fairings - Change of Location	Current
56	-	-	-		Cancelled (Not Issued)
57	V144	2	30,31	Safety Catch on Drop Tank Control Guard - Introduction	Current
58	V78	2	30	Landing Wheel Lock Ring - Wire Locking	Current
59	V128	2	30	Fuel Gauge Transmitter Arm - Introduction of Reworked Arm	Current
60	V161	2	30, 31	Oxygen Bottles - Repositioning	Cancelled by Mod 131

(Issued with A/L 304)

Mod No	Equiv De Hav No	Class	Application	Title	Remarks
73	V117	2	30, 31	Detachable Nose Panel - Improved Catch	Current
74	V148	2	30, 31	Machmeter - Re-introduction	Issue 2 Current
75	V643	2	33, 35, 35A	Accelerometer - Introduction	Cancelled by Mod 205
76	V159	2	30, 31	Sperry Mk 3 Type HL5 Artificial Horizon - Introduction	Current
77	V646	2	33, 35, 35A	Reinforced Rubber Elbow on Fuel Tank Vent Line - Introduction	Current
78	V628	2	33, 35, 35A	Nose Wheel Jack Attachment Bolts - Improved Access	Current
79	V163	2	30, 31	Canopy Fitting Instruction Notice - Introduction	Current
80	V627	2	33, 35, 35A	Elevator Quadrant Axle in Steel - Introduction	Current
81	V629	2	33, 35A	Canopy Hatch Lifting Lugs - Introduction	Current
82	V619	2	33, 35, 35A	Control Column Guard - Reinforcement	Current
83	V609	2	33, 35, 35A	Control Locking Gear and Stowage - Introduction	Current
84	V611	2	33, 35, 35A	Front Jet Pipe and Fire-guard Drain - Extension to Atmosphere	Current
85	V173	4	30, 31	Rotax Windscreen De-icer Pump M2601 - Introduction	Current

Mod No	Equiv De Hav No	Class	Application	Title	Remarks
99	V637	2	35, 35A	Modified Martin Baker Blast Tubes - Introduction	Current
100	V174	2	33, 35, 35A	Relief Valve in Fuel System Vent Line - Introduction	Current
101	V181	2	30, 31, 33, 35, 35A	Lightweight Packing in Wing Fuel Tank Bays - Introduction	Current
102	V636	2	33, 35, 35A	Positive Locking of Under-carriage Lever and Redesigned Handle for the Dive Brake Selector Lever	Current
103	V650	2	33, 35, 35A	To Reset the Cabin Air Temperature Control	Current
104	V635	2	33, 35, 35A	Starter Timing Circuit - Modification	Current
105	V639	2	33, 35, 35A	Self-Sealing Couplings in Hydraulic Pump Circuits at Engine - Repositioning	Current
106	V174	2	30, 31	Relief Valve in Fuel System Vent Line - Introduction	Current
107	V70	2	30	Replacement of Bolts - Skin Attachment	Current
108	V634	2	33, 35, 35A	Access Ladder - Introduction of Stowage and Strengthening of Top Platform	Current
109	V632	2	33, 35, 35A	Link Chute Extensions - Introduction	Current

Mod No	Equiv De Hav No	Class	Application	Title	Remarks
121	V199	2	30, 31, 33, 35, 35A	Stiffening of Under-carriage Diaphragms - Introduction	Current
122	V190	2	30, 31	Accelerometer - Introduction in Mks 30 and 31 Aircraft	Current
123	V177	2	30, 31	Target Towing Equipment - Introduction	Current
124	V657	3	33, 35, 35A	Special Adapter in Pneumatic System at Fireproof Bulkhead - Introduction	Current
125	V647	3	33, 35, 35A	Provision for High Energy Ignition Equipment - Introduction	Current
126	V203	2	30, 31	VHF Press-to-Talk Switch - Relocation	Current
127	V196	2	30, 31	Safety Lanyard for the Handle of Canopy Winding Gear - Introduction	Current
128	V658	3	33, 35, 35A	Instrument Panel - Modified Attachments	Current
129	V192	2	30, 31, 33, 35, 35A	Provision for Aligning the Aircraft for Compass Swinging - Introduction	Current
130	V195	3	30, 31, 33, 35, 35A	Anchor Nuts on Forward and Rear Flange of Inner Cannon Front Mounting Casting - Introduction	Current
131	V100	2	30, 31	Martin Baker Ejector Seat Mk 2F	Current Not to be Issued

Mod No	Equiv De Hav No	Class	Application	Title	Remarks
143	V202	2	30, 31	Power Failure Warning Light to Electrically Driven Flight Instruments - Introduction	Current
144	V660	2	33, 35, 35A	VHF Controller - Reposition	Current
145	V213	2	30, 31, 33, 35, 35A	Introduction of Mk 8T Pressure Head as an Alternative Fitment	Current
146	V197	3	30, 31, 35, 35A	Flexible Hoses at Rear of Instrument Panel DTD 251 in Lieu of DTD 373 - Introduction	Cancelled by Mod 205
147	V665	2	33, 35A	Provision for Individual Control of Oxygen Supply	Cancelled by Mod 205
148	V621	3	33, 35, 35A	Modified No 2 and 3 Wing Fuel Tanks Embodying Anti-Surge Valve at Outboard Feed	Current
149	V666	2	33, 35A	Power Failure Warning Light to Electrically Driven Flight Instruments	Incorporated in Mod 205
150	V667	2	33, 35, 35A	Clock Stop Type V308	Current
151	V189	3	30, 31	Provision for High Energy Ignition Equipment - Mk 30831 Aircraft - Introduction	Current
152	V198	2	30, 31	Dimmer Switch for Navigation Lights	Current
153			30, 31	Inversion of Air Speed Indicator	Current Not to be Issued

(Issued with A/L 304)

Mod No	Equiv De Hav No	Class	Application	Title	Remarks
166	V193	2	30, 31, 33, 35, 35A	Improved Top Attachment Pin in Main Undercarriage Retracting Jack - Introduction	Superseded by Mod 345
167	V664	2	33, 35, 35A	Repositioning of Fire Detectors	Superseded by Mod 271 (Not Issued)
168	V661	3	33, 35, 35A	GSAP AN-N6 Camera Gun - Introduction	Current
169	V668	2	33, 35, 35A	Provision for Testing Camera Gun Circuit - Introduction	Current
170	V649	2	35, 35A	To Introduce Adapters in the Static and Pressure Lines to the Machmeter	Current
171	V677	2	33, 35A	To Introduce a Redesigned Instrument Panel	Superseded by Mod 205 (Not Issued)
172	V209	2	30, 31, 33, 35, 35A	Teleflex Greaser - Main Undercarriage Wheel Door - Introduction	Current
173	V210	2	30, 31	To Introduce a Flashing Unit Undercarriage Warning Light Circuit	Current
174	V669	2	33, 35, 35A	Voltage Regulator Type B - To Provide Insulation Between Voltage Regulator and Fuselage Bulkhead	Current
175	V191	2	30, 31	Electrical Turn and Slip Indicator Mk 2 - Introduction	Current To be Issued

(Issued with A/L 304)

Mod No	Equiv De Hav No	Class	Application	Title	Remarks
189	V603	2	33, 35, 35A	VHF TR1936 Radio - Introduction	Current To be Issued
190	V608	2	33, 35, 35A	Provision for Slinging the Aircraft	Current To be Issued
191	V612	2	33, 35, 35A	Filter in Oxygen Charging Line	Current To be Issued
192	V614	2	33, 35, 35A	Replacement of Two Bolts in Nose Wheel Door with Rivets	Current To be Issued
193	V616	2	33, 35, 35A	Safety Washers on Dive Brakes, Flaps and Under-carriage Connecting Rods	Current To be Issued
194	V617	2	33, 35, 35A	Elevator Trim Tab - Strengthening	Current To be Issued
195	V618	2	33, 35, 35A	To Improve Front Fastening and Opening of Hinged Nose Cowl	Current To be Issued
196	V623	2	33, 35A	Redesigned Stop to Decrease Rudder Movement	Current To be Issued
197	V630	2	33, 35, 35A	Booster Pump Switch Guard	Current To be Issued
198	V631	2	33, 35, 35A	To Prevent Chafing of Electrical Cables in Gun Bay	Current To be Issued
199	V686	2	33, 35A	To Re-run Cold Air Pipe to Permit Fitment of Modified Mk 11 Cabin Pressure Control Valve	Not Issued Cancelled by Mod 276
200	V655	2	33, 35, 35A	Redesigned Pipe Connection Between No 1 and No 3 Wing Fuel Tanks	Current To be Issued

Mod No	Equiv De Hav No	Class	Application	Title	Remarks
212	V698	2	33, 35A	To Introduce an Automatic Line Valve in Oxygen System	Incorporated in Mod 211
213	V699	2	33, 35A	Introduction of a Mk 4F Gyro Magnetic Compass in Lieu of Mk 4B Type	Cancelled on Mk 35A (Basic Fitment on Mk 35)
214	V700	2	33, 35A	Introduction of Flame Switch Type HS/RS300 in Lieu of Type HS/RS180	Superseded by Mod 271
215	V701	2	33, 35A	Introduction of Mk E2B Compass in Lieu of Mk E2A	Incorporated in Mod 205
216	V613	2	33, 35A	"Z" Type Safety Harness - Repositioning Oxygen Support Clip	Current To be Issued
217	V624	2	33, 35A	"Z" Type Harness Release Box - Rework	Current To be Issued
218	V687	4	33, 35A	Flexible Joint Fuel Feed Line - Introduction	Current
219	V216	2	30, 31	LP and HP Fuel Cock and Throttle Teleflex Greasers - Introduction	Current
220	V217	2	30, 31	To Provide a Coarse Mesh Intake Guard on Introduction of Modified Mk 11 Cabin Pressure Control Valve	Current Not to be Issued
221	V218	2	30, 31	Thermocouple Leads - Provision of Insulated Mounting Brackets	Current
222	V219	2	30, 31	IFF Radio - Removal	Current

Mod No	Equiv De Hav No	Class	Application	Title	Remarks
233	V225	2	30, 31, 33, 35A	Special Bolts in Rudder Tip - Introduction	Current
234	V155	2	30, 31	VHF Aerial Type 226 - Lengthening of Aerial Rod	Current
235	V711	2	33, 35A	Oxygen Pipe - Replacement of Joint	Current
236	V709	2	33, 35A	Connector Block Guard - Introduction	Current
237	V707	2	33, 35, 35A	Introduction of Alkaline Battery Type MP04	Current
238	V222	2	30, 31	To Introduce Solid Ribs in Lieu of Skin Stiffeners in the Elevators	Cancelled Not Issued
239	V227	2	30, 31	Fitment of GSAP Camera Gun AN-N6 in Lieu of the Mk G45B	Current
240	V229	2	30, 31	Mk 16A Oxygen Regulator and Automatic Line Valve - Introduction	Current
241	V713	2	33, 35A	Extended Fuselage Fuel Tank Vent and Improved Sealing Between Vent and Cowling	Current
242	V230	4	30, 31, 33, 35A	Introduction of Strengthened Radius Rod Assembly and Attachment Fittings	Cancelled (Not Issued)
243	V223	2	30, 31	Thin Wall "Bag" Type Fuel Tanks - Introduction	Cancelled (Not Issued)
244	V226	2	30, 31	Standard US Type External Power Supply Sockets - Introduction	Current

Mod No	Equiv De Hav No	Class	Application	Title	Remarks
256	V719	2	35A	Fuel Contents Gauge in Mass Units - Calibrate	Current
257	V720	2	35, 35A	Guard for Aileron Chain and Sprocket at Base of Control Column - Introduction	Current
258	V721	2	35, 35A	Guard for Elevator Control Quadrant in Cockpit - Introduction	Current
259	V722	2	35, 35A	Rudder Top Hinge in Fins - Reinforcing	Current
260	V723	2	35, 35A	Special Covers Over Battery Vents - Introduction	Current
261	V235	2	All Marks	Provision of Additional Holes in Turnbuckle at Rear End of Stay Tube	Current
262	V236	2	All Marks	Front Gun Mounting Unit - Provision of Finer Adjustment	Current
263	V725	2	35, 35A	To Increase the Gauge of Hydraulic Oil Pressure Pipe in Gun Bay	Current
264	V726	2	35, 35A	Modified Tail Cone - Introduction	Current
265	V233	3	30, 31, 33, 35A	Additional Clearance for the Apex Bolt at the Main Undercarriage Torque Links - Introduction	Current
266	V727	2	33, 35A	G4B Compass Master Indicator - Shock Mounting - Introduction	Current

(Issued with A/L 304)

Mod No	Equiv De Hav No	Class	Application	Title	Remarks
277	V733	2	35A, 35	Oxygen Charging Point - Repositioning	Current
278	V734	4	35A, 35	Introduction of Nose Wheel Outer Cover, P/No NFR 31 in Lieu of P/No NFR 30	Current
279		2	30, 31, 33, 35A	Fixed Methyl Bromide Fire Extinguisher - Introduction of Mounting Bracket Type 2B	Current
280	V735	2	35, 35A	Data Plate - Goblin Engine - Revision	Current
281	V736	2	35A, 35	To Improve Demisting of Canopy and Windscreen	Current
282	V242	3	33, 35A	Improved Venting of Wing Fuel Tanks - Introduction	Current
283	V738		Special Installation (A79-612 only)	To Introduce an Anti-Spin Parachute	Current Not to be Issued
284	V739	2	35A, 35	Nut Plate - De-icer - Pump - Introduction	Current
285	V740	2	35A, 35	GGS Selector Dimmer Mounting	Current
286	V741	2	33, 35A, 35	Washer Retaining Spring on the Rudder Damper Strut - Introduction	Current
287	V742	2	33, 35A, 35	To Provide Indicator Knob on Cabin Temperature Control Wheel	Current
288	V743	2	35A, 35	Micro Switch G5C/4639 at Undercarriage Selector Lever in Lieu of Switch G5C/1789 - Introduction	Superseded by Mod 320

(Issued with A/L 304)

Mod No	Equiv De Hav No	Class	Application	Title	Remarks
299	V751	2	35A, 35	Suppressor, Type B5 in the Fuel Booster Pump Circuit - Introduction	Current
300	V752	2	35A, 35	Suppressor, Type P1, in the AC Output Supply from the Type 100A Inverter - Introduction	Current
301	V753	2 & 4	35A, 35	Replacement of Flexible Brake Hoses having Improved Swaging - Introduction	Current
302	V754	2	35A, 35	Timken Type Roller Bearings in Main Under-carriage Wheels (Dunlop Wheels and Brakes Mod No 9) - Introduction	Current
303	V755	2	35A, 35	To Introduce Modified Foot Motors to Eliminate Air Trapped in Brake Installation	Cancelled Not Issued
304	V246	2	30, 31	To Relocate the Emergency Light Battery	Current
305	V756	2	35A, 35	To Introduce a Redesigned Drop Tank Jettison Lever and Improve the Attachment of the Mounting Assembly	Current
306	V757	2	35	Gauge Fuel Contents - Introduction of Increased Dial Range	Current
307	V758	2	35A, 35	Grounding Sockets at Fuel Tank Filler Connections - Introduction	Current

Mod No	Equiv De Hav No	Class	Application	Title	Remarks
317	V770	2	35A, 35	To Make Provision for an Aircraft Fatigue Meter Mk 2B (Ident No G6A/5028)	Current
318	V768	2	35A, 35	To Introduce a Cover Plate Over the RP Relay and Resistance Unit Mounted on the Rear Face of Bulkhead No 4	Current
319	V769	2	Trial Installation only	Introduction of Fuel Asymmetry Gauge	Cancelled (Not Issued)
320	V771	2	35A, 35	Undercarriage Flashing Warning Light when the Undercarriage Selector Lever is not Selected to the Fully Down Position - Introduction	Current
321	V772	2	35A, 35	Hydraulic Brake Unit Header Tank P/No DY1080 in Lieu of DY1070 (Dunlop Wheels and Brakes Mod No 8) - Introduction	Current
322	V773	2	35A, 35	First Pilot's Speed Brake Lever - Introduction of a New Handle	Current
323	V774	2	35A, 35	Gunsight Mounting Retractable - Modification to Electrical Wiring for Vampire Trainer Aircraft	Current
324	V775	2	35A, 35	Foot Trays in the Floor Plate of the Rudder Controls - Introduction	Current
325	V776	2	35A, 35	Windscreen Wiper - Introduction	Current

Mod No	Equiv De Hav No	Class	Application	Title	Remarks
336	V792	2	35A, 35	Pinned Chobert Rivets at Rib 2	Current
337	V791	2	35A, 35	Fleximet Pipe in Lieu of Rubber Hose for the Fuel Transfer Air Feed - Introduction	Current
338	V779	4	35A, 35	Introduction of Forged Rudder Pedestal in Lieu of Casting	Cancelled (Not Issued.)
339	V780	4	35A, 35	1/4" Steel Chobert Rivets for Securing Rudder Pedestal to Rudder Post - Introduction	Current
340	V787	3	35A, 35	TR1936 Radio - To Re-route the Aerial Lead in the Engine Bay	Current
341	V793	2	35A, 35	Positive Type Locking of the HP Fuel Cock Lever - Introduction	Current
342	V795	2	35A, 35	Bolts in Lieu of Countersunk Screws for the Attachment of the Ammunition Chute and Ammunition Spigot Base in the Ammunition Bay - Introduction	Current
343	V796	2	35A, 35	Strengthened Mounting Bracket for the External Power Supply and a New Shroud (P/No G13331) to Both the External Power Supply and Engine Starter Socket	Current

(Issued with A/L 304)

343 STRAIN GAUGE BRACKET FOR EXT POWER & START PLUGS.

344 INTERCOM UNIT ON COMPASS POSN OF TR / SELECT SWITCH

345 UNION CARRIAGE ?.

346

347 COCKPIT LIGHTING - ADDITIONAL FUSES.

348 REMOVAL OF NOSE DOWN LOCK & DOOR LOCK MICRO SWITCH

349 CANOPY ROD STAY WMO

350

351 DUNLOP TWIN BRAIDED PRESSURE HOSE WH 3/2.

352 PITOTSTATIC VENTS + PITOT DRAIN TRAP.

353 HYDRAULIC RELIEF VALVE

Mod No	Equiv De Hav No	Class	Application	Title	Remarks
354	V354	2	35, 35A	Hydraulic General Services - Introduction of Pressure Warning Light	Current
355	V355	2	35, 35A	Aileron Sprocket Chain Guard - to Provide Positive Location on the Control Column	Current
356	V356	2	35, 35A	Emergency Cockpit Lighting - Revised Installation	Current
357	V357	2	35, 35A	To Isolate the DC Generator from Battery at Low Engine RPM	Cancelled (Not Issued)
358	V358	2	35, 35A	Speed Brake Selector Lever Improved Locking in "In/Out" Positions	Superseded by Mod V378
359	V359		(Special Fitment only)	Installation of Sidewinder Guidance Control Head in Nose Section	Current
360	V360	2	35, 35A	Provision of a Standard Non-Magnetic Knife in Cockpit	Current
361	V361	2	35	Support Bracket for Barometric Line Valve and Compass Corrector Mounting Bracket - Introduction	Current
362	V362	2	35, 35A	Fuel Drain Cock - Introduction	Current
363	V363	2	35, 35A	Wing Rib No 2 - Reinforcing	Current
364	V364	2	35, 35A	Electrically Operated Fuel Booster Pump - Introduction of Test Switch and Test Socket	Current

Mod No	Equiv De Hav No	Class	Application	Title	Remarks
375	V375	2	35, 35A	Auxiliary Fuel System - Jettisonable Fuel Tanks - Introduction of Fibre Glass Break-tubes in Lieu of Glass Break-tubes	Current
376	V376	2	35, 35A	Hydraulic Brake System - Mk 3 Control Valve - Introduction of an Additional Stiffener at the Control Valve Mounting Bracket	Current
377	V377	2	35, 35A	Main Undercarriage Compression Legs - To Introduce Steel Dowels and Locking Pins to Positively Locate the Retraction Jack Lever	Current
378	V378	2	35, 35A	First Pilot's Speed Brake Selector Lever - Re-introduction of Spherical Type Stop Buttons in Lieu of Conical Type	Current
379	V379	2	35, 35A	Pacitor Fuel System - Introduction of Unit Gauge 31 Coaxial Cable in Lieu of Uni Radio 31 Coaxial Cable	Current
380	V380	2	35, 35A	To Introduce Breeze Type Connectors in Lieu of Terminal Block at the Jet Pipe Temperature Thermo-couple Disconnect on Rib No 1	Current ~~To be Issued~~ A/L 320
381	V381	2	35, 35A	Rudder Pedals - Introduction of Tie Bars. Wipers and Strengthened Springs	Current

Mod No	Equiv De Hav No	Class	Application	Title	Remarks
391	V391	2	35, 35A	Main Undercarriage to Introduce Flexible Conduit in the Door Lock Mechanism	Current
392	V392	2	35, 35A	Main Undercarriage Radius Rod - Introduction of Additional Grease Nipple	Current
393	V393	2	35, 35A	Undercarriage Lever Down Lock Warning Circuit - Revised Power Supply	Current
394	V394	2	35, 35A	Manual Release Unit - Enlargement of Access Panel	Current
395	V395	2	35, 35A	Canopy Jettison Handle - Introduction of Pip Pin to Locate Handle in Lieu of Nut and Bolt	Cancelled Not to be Issued
396	V396	2	35, 35A	Main Undercarriage Radius Rod Assembly - Introduction of an Improved Type Bearing Bush	Current
397	V397	2	35, 35A	Undercarriage Micro Switch Actuating Lever - Introduction of a Longer Outboard Actuating Lever	Current
398	V398	2	35, 35A	Main Undercarriage Door Mechanism - Introduction of Phenolic Material Rubbing Strip in Lieu of Steel	Current
399	V399	2	35, 35A	Nose Wheel Door Mechanism - Introduction of Improved Upper Radius Rod Attachment Fitting	Current

401 INTRO OF 34 H HAND FIRE EXT.

402 ENGINE DRIVEN HYD PUMP. LONGER HOSE.

403 ISOLATION OF CBN AT LOW RPM

404 SIREN LOADING MUTE SWITCH.

405 EJECTION FUEL CABLE ACME PLUGS.

406 U/C FLASH WARNING SWITCH CANCELLED MK360.

407 A.S.I LIGHTING (FLG BLOW LIGHT).

408 FUEL SYS NOW TANK PRESSURISATION LINES

Mod No	Equiv De Hav No	Class	Application	Title	Remarks
408	V408	2	Mk 35	Fuel System - To Introduce a New Tank Pressurizing Pipe Line Assembly and Fittings	Current ~~To be Issued~~
409	V409	2	35, 35A	Oxygen System - To Provide Guards for Flexible Hoses on Martin Baker Ejection Seats and Revise the Hose Length	Current A.L. 327 ~~To be Issued~~
410	V410	2	35, 35A	Cabin Cooling System - Introduction of Inter Cooler Airflow Extractor	Current ~~To be~~ Issued A/L 313
411	V411	2	35, 35A	Pitot Static Line - Introduction of Union Nuts P/No AGS 838/13 in Lieu of Union Nuts AGS 838/3 and AGS 838/4	Current ~~To be Issued~~ A/L 305
412	V412	2	35, 35A	Hydraulic System - Introduction of Non-Return Valve in Hydraulic Hand Pump Piston	Current ~~To be Issued~~
413	V413	2	35, 35A	Vampire Elevators - Introduction of a Reinforcing Bracket for Ribs J00688 at Elevator Cut-out Locations	Current ~~To be Issued~~ A/L 306
414	V414	2	35, 35A	Fuel System - Introduction of a Water Drain Cock in the Low Pressure Filter Bowl	Cancelled
415	V415	2	35, 35A	Main Fuel Tank - To Introduce an Improved Method of Securing the Safety Chain to the Filler Cap	Current

(Issued with A/L 304)

430 Introduction of Anti-Collision Lights Cancelled Before Issue

431. HYDRAULIC SYSTEM - INSTALLATION OF "IN LINE" MICRONIC FILTERS IN THE NORMAL AND EMERGENCY (HAND PUMP) HYDRAULICS CIRCUITS. CURRENT

432. HYDRAULIC SYSTEM - INTRODUCTION OF A SHOULDERED FLUTTER PLATE IN THE HYDRAULIC CUT-OUT VALVE IDENT No 1650-RAF-27M433 AL 3 CURRENT

433 NOT ISSUED

434 NOT ISSUED

435 REAR CANOPY INTRO OF ALL STEEL SPIGOT BRACKET.

436. MAIN UNDERCARRIAGE COMPRESSION LEGS. - INTRODUCTION OF NEW JACK OPERATING LEVER AND LOCATING PINS.

437 V437 - CLASS 2 - ALL MK35 AND MK35A - REPOSITIONING OF U/C FLASHER UNIT CURRENT

438 Fuselage - Introduction of Baffles Across the Starboard Side of the Cockpit Floor Behind the Electrical Equipment

439 Provision of additional Radio Muting Facilities on Aircraft Control Column. Cancelled by AL 361 AL

440 NOT ISSUED

441 VAMPIRE AIRCRAFT MKS 35 and 35A. - Relocation of Oxygen Charging Valve. AL

442 MK 35 and 35A - Repositioning of Central Emergency Light

443 VAMPIRE AIRCRAFT MKS 35 AND 35A - INTRODUCTION OF INSTRUMENT PANEL SECURING CLAMP. AL

444 NOT ISSUED.

445 Vampire Aircraft - MKS 35 & 35A. - Replacement of alloy Tubing with Maricon Tubing at rear of Instrument panel. AL 3

446 NOT ISSUED.

447 Hydraulic cut-out Valve - Introduction of Bonded Sealing Washers.

448 - Class 2 - MK 35 and MK 35A - Introduction of Guard for Emergency Light Switch - Current Issued

449 CONVERSION MK 35 to MK 35W.

450. Class 2 - all MK 35 & MK 35A. Incorporating Mod 204 - Repositioning of downward Identification plug. — Current.

451. Pacitor Fuel Gauge System - Introduction of Lock Nuts on Straight Co-axial Connector Ident No 6935-PN-C82-14. Cancelled A/L 359 AL

452. (Nil - 3 - 35, 35A.) Fuel Contents Systems Introduction of one-piece Cable Assemblies from Rectifier to Wheel-Well Junction Units.

153

Air Force Head-Quarters

Technical Order

VAMPIRE MODIFICATION NO. 1

Application: See paragraph 2

Classification: Class. 4

STRENGTHENED NOSE WHEEL STRUCTURE - INTRODUCTION

Introduction

1. This order authorizes an improved design change and incorporates a strengthened type nose wheel structure.

Embodiment

2. This modification is applicable to Vampire Mark 30 aircraft not incorporating De Havillands (Aust.) Modification No. V.2, and will be embodied when the original nose wheel structure becomes unserviceable due to major damage or lack of spares.

3. The incorporation of this modification will not involve the use of any special tools.

4. The work will take approximately 120 man-hours.

Supply

5. The following parts are required to incorporate this modification:-

Item No.	Ident. No.	Part No.	Nomenclature	No. off per a/c.	Remarks
1	A79/500779	G001044	Bolt, radius rod link	1	
2	A79/500785	G001053	Bolt, top structure	2	
3	A79/500781	G001046	Shim	2	
4	A79/500786	G001054	Tube, distant	2	
5	A79/500778	G001043	Bolt, nose wheel	1	
6	A79/500776	G001041	Fork end	1	
7	A79/500777	G001042	Lock nut	1	
8	A79/500784	G001052	Link, radius rod	1	
9	A79/500800	G001097A	Rod radius	1	
10	A79/500288	G001049	Bracket, bottom left-hand	1	
11	A79/500289	G001050	Bracket, bottom right-hand	1	
12	H28C/6045	AGS946E	Washer, 5/16" stainless steel	1	
13	H28/7676	A16Z06	Nut, slotted, S.S. 5/16" B.S.F.	1	
14	H28B/5051	AGS784/2	Split pin, 1/16" x 3/4" long	1	
15	H28B/5052	AGS784/3	Split pin, 1/16" x 1" long	12	
16	H28C/56332	DHS69/E	Shim washer, 5/16" diameter	8	
17	H28C/3370	AGS247/20	Screw, 4 B.A. x 1/4" long	1	
18	H28/6465	A16Z-JS	Nut, slotted, S.S. 5/8" B.S.F.	3	
19	H28C/55618	AGS946F	Washer, 3/8" S.S.	3	
20	H28C/3073	AGS160E	Washer, 5/16"	2	

Item No.	Ident. No.	Part No.	Nomenclature	No. off per a/c.	Stores Class.
21	K4/10858		Peratol Solvent No. 604	As Required	C
22	K4/10857		Peratol Primer No. 580	As Required	C
23	K4/10854		Peratol 250 Part A	As Required	C
24	K4/10855		Peratol 250 Part B	As Required	C
25	K4/10856		Peratol 250 Part C	As Required	C

6. The items in paragraph 5 are to be drawn from unit stores.

7. The following parts will be rendered redundant by the incorporation of this modification and are to be disposed of in accordance with the current authorized procedure.

Item No.	Ident. No.	Part No.	Nomenclature	No. off per a/c.	Stores Class.
1		G00198	Bolt, lock link	1	
2	A79/500709	G00292 Mark 3	Bolt, top structure	2	
3		G00290	Shim	2	
4	A79/500710	G00303	Tube, distance	2	
5		G00209	Bolt, nose wheel	1	
6		G00665	Fork end	1	
7	A79/501465	G00195	Lock nut	1	
8		G00496	Link, radius rod	1	
9		G00173A	Rod radius	1	
10		G00286	Bracket, bottom left-hand	1	
11		G00287	Bracket, bottom right-hand	1	
12	H28C/3073	AGS160E	Washer, 5/16" plain	1	
13	H28/770	A16YGS	Nut, slotted, 5/16" B.S.F.	3	
14	H28B/5031	AGS784/2	Split pin, 1/16" diameter x 3/4" long	1	
15	H28/5032	AGS784/3	Split pin, 1/16" diameter x 1" long	12	
16	H28C/36332	DHS69/E	Shim washers	8	
17	H28C/3370	AGS247/20	Screw, 4 B.A. x 1/4" long	1	
18	H28/772	A16YJS	Nut, slotted, 3/8" B.S.F.	1	
19	H28C/3074	AGS160F	Washer, 3/8" plain	1	

Method of Incorporation

8. Remove the radius rod "Q" as per Section 5, R.A.A.F. Publication No. 828. Discard the 4 B.A. screw, bolt, washer, nut and split pin from the lock link at the lower end of the radius rod. Retain the grease nipple in the end of the bolt for fitment to the new assembly. Discard the radius rod, shims and two of the four bolts, distance tubes and nuts used for attaching the radius rod to brackets "B" on the bottom of the armour plate.

9. Remove and discard the radius rod link "N" together with the fork end and lock nut by withdrawing the bush (retain), bolt, nut and washer (discard).

10. Remove and retain the 5/16" bolt, nut and washer securing the bottom stay tube "D" to brackets "B" on the armour plate.

11. Remove and discard the tow bottom brackets "B". Retain the bolts, nuts and shims.

12. Remove all traces of peratol from the armour plate after removal of the brackets in paragraph 11.

13. Fit the new bottom brackets (Items 10 and 11) shimming as necessary to line up the 5/16" hole in brackets "B" with the hole in the eye-end of the bottom stay tube.

14. If the shims removed at paragraph 11 prove unsatisfactory, then use the new shims (Item 17) (maximum number two off per bolt) peeling off laminations until the required thickness is obtained. Apply peraclor and peratol as per R.A.A.F. Publication No. 828, Section 4, Chapter 5, paragraph 81. Bolt up and pin, using bolts and nuts removed at paragraphs 10 and 11 and split pins (Item 15).

15. Assemble the new radius rod link (Item 8) together with the fork end (Item 6) and lock nut (Item 7) to the nose wheel leg, using the bolt (Item 5), washer (Item 19), nut (Item 18) and split pins (Item 15).

16. Assemble the new radius rod (Item 9) to brackets "B" with the two off bolts, nuts, distance tubes and washers retained at paragraph 8, washers (Item 20) and split pins (Item 15) in the top holes, and the bolts (Item 2), distance tube (Item 4), nuts (Item 18), washers (Item 19) and split pin (Item 15) in the bottom holes, shimming as necessary with Item 3.

17. Assemble the radius rod "Q" to links "O" and "N" using the bush retained at paragraph 9, bolt (Item 1) with grease nipple, nut (Item 13), washer (Item 12) and split pin (Item 15), having made the necessary adjustments similar to those detailed for the main undercarriage in R.A.A.F. Publication No. 828, Section 4, Chapter 5.

18. Re-assemble jack "P" to the radius rod using bolt, nut and washer retained at paragraph 8 and pin using Item 14.

19. Completely re-assemble nose wheel unit as per Section 5, R.A.A.F. Publication No. 828.

Drawings

20. Not issued.

Effect on Weight and Balance

21. The effect of this modification on the weight and balance of the aircraft is negligible.

References: R.A.A.F. Files 9/84/91 and 150/4/7905,
De Havilland (Aust.) Mod. V.2,
De Havilland Instruction Leaflet 142,
Air Ministry Mod. No. 590.

Date of Issue: 19th January, 1951.

TS3

Restricted

Air Force Head-Quarters

Technical Order

VAMPIRE MODIFICATION NO.2

Application: A79-1, A79-2 and A79-560

Classification: Class. 4

MAIN UNDERCARRIAGE LEG - INTRODUCTION OF STRENGTHENED TYPE

Introduction

1. This order authorizes an improved design change and incorporates a strengthened type main undercarriage leg.

Note. - This modification cannot be carried out unless wing rib number 2 has been modified in accordance with Vampire Modification No. 3 or the approved equivalent, De Havilland (Anst.) Modification No. V29.

Embodiment

2. This modification is to be embodied during complete overhaul, or, if and when the original main undercarriage leg becomes unserviceable or unrepairable due to major damage or through lack of spares.

3. The incorporation of this modification will not involve the use of any special tools.

4. The work will take approximately 240 man-hours.

5. The following parts are required to incorporate this modification:-

Item No.	Ident. No.	Part No.	Nomenclature	No.off per a/c.	Stores Class.
1	T27A/2087	FGR.17N	Cover, outer	2	
2	T27A/14241	AH8902	Unit, brake	2	
3	A79/500798	G001094	Rod, radius, left-hand	1	
4	A79/500799	G001095	Rod, radius, right-hand	1	
5	A79/500797	G001090	End, fork	2	
6	A79/500802	G001099	Leg, compression, right-hand	1	
7	A79/500803	G001100	Leg, compression, left-hand	1	
8	A79/500792	G001080	Arm, striker	1	
9	A79/500793	G001082	Cradle	1	
10	A79/500790	G001059	Pin, striker	1	
11	A79/500671	G00155	Eye, bolt	2	
12	A79/500771	G001014	Nut, special	4	C
13	H28/10783	AS1882/3G	Bolt, Csk. 5/16" B.S.F. x .8" long	14	C

Item No.	Ident. No.	Part No.	Nomenclature	No.off per a/c.	Stores Class.
14	A79/501688	G001649ND	Nut, special slotted	6	C
15	H28/770	A16Y/GS	Nut, slotted 5/16" B.S.F.	12	C
16	H28B/1207	AGS784/3	Split, pin 1/16" diameter x 1" long	18	C
17	H28/9845	AS1882/4G	Bolt, Csk. 5/16" B.S.F. x .9" long	4	C
18	H28/7879	A1/7B	Bolt, Hex. 4 B.A. x 1.05" long	2	C
19	H28/754	A16Y/BT	Nut, thin 4 B.A.	2	C
20	H28/7306	A15Y/12G	Bolt, H.T. 5/16" B.S.F. x 1.7" long	2	C
21	H28/7074	A15Y/8G	Bolt, H.T. 5/16" B.S.F. x 1.3" long	2	C
22	H28/10428	AS1882/11E	Bolt, Csk. 1/4" B.S.F. x 1.55" long	2	C
23	H28/9639	AS1882/10E	Bolt, Csk. 1/4" B.S.F. x 1.45" long	2	C
24	H28C/8520	AS470G	Washers, 5/16"	As Reqd.	C

6. The above items will be drawn from unit stores.

7. The following parts are rendered redundant by the incorporation of this modification and are to be disposed of in accordance with the current authorized procedure:-

Item No.	Ident. No.	Part No.	Nomenclature	No.off per a/c.	Stores Class.
1	T27A/2222	FCR/16N	Cover, outer	2	
2	T27A/14223	AH8219	Unit, brake	2	
3		G005A	Rod, radius, left-hand	1	
4		G006A	Rod, radius,right-hand	1	
5		G0063	End, fork	2	
6		G003A/5	Leg, compression, left-hand	1	
7		G004A/5	Leg, compression, right-hand	1	
8		G00631A	Arm, striker	1	
9		G00634	Cradle	1	
10		G00635	Pin, striker	1	
11		G00155 Mk. 2	Eye, bolt	2	
12		G0088	Nut, special	4	
13		00615	End, fork	4	
14	H28/8524	AS1882/3E	Bolt, Csk,1/4" B.S.F. x .75" long	18	
15	H28/768	A16YES	Nut, slotted,1/4" B.S.F.	18	

Item No.	Ident. No.	Part No.	Nomenclature	No. off per a/c.	Stores Class.
16	H28B/1207	AGS784/3	Split, pin, 1/16" diameter x 1" long	18	
17	H28B/7920	A1/8B	Bolt, Hex. 4 B.A. x 1.15" long	2	
18	H28/10287	BP1	Nut, simmonds 4 B.A.	2	
19	H28/7306	A1/12G	Bolt, 5/16" B.S.F. x 1.7" long	2	
20	H28/7074	A1/8G	Bolt, 5/16" B.S.F. x 1.3" long	4	
21	H28/11738	A1/7G	Bolt, 5/16" B.S.F. x 1.2" long	2	
22	H28/5853	GP1	Nut, simmonds, 5/16" B.S.F.	8	
23	H28/10428	AS1882/11E	Bolt, Csk., 1/4" B.S.F. x 1.55" long	2	
24	H28/9639	AS1882/10E	Bolt, Csk., 1/4" B.S.F. x 1.45" long	2	

Method of Incorporation

Refer Figure 57, R.A.A.F. Publication No. 828 (Vampire Mk. Aircraft - Descriptive Manual).

8. Remove main wheels as per Section 5, R.A.A.F. Publication No. 828.

9. From the left-hand undercarriage torque links remove and discard the micro switch striker arm, retaining two 2 B.A. bolts. Remove and discard the striker pin but retain 2 B.A. nut for fitment to the new assembly. Remove and retain the micro switch from cradle, discarding two 4 B.A. bolts and nuts. Disconnect cables from the micro switch terminals. Remove and discard the cradle from upper torque link. Retain two 2 B.A. bolts.

10. Remove and retain all clips, nuts, bolts, screws, etc., securing the micro switch cable to the undercarriage leg and fixed fairing.

11. Remove the main wheel door fixed fairing as per Section 5, R.A.A.F. Publication No. 828. Retain all parts removed with the exception of the fork ends, 8 off 5/16" bolts, 2 off eye bolts, 4 off 5/16" simmonds nuts, which are to be discarded.

12. Remove and retain the pneumatic brake line "W". Retain all clips and mountings together with the bolts, etc., for fitment to new undercarriage leg, with the exception of 2 off 1/4" bolts, 2 off nuts and two off split pins securing the locking plate to the brake unit, which are to be discarded. Open out the two 1/4" holes in the locking plate to letter "O", drill and retain the plate for fitment to new assembly.

13. Remove the undercarriage legs as per Section 5, R.A.A.F. Publication No. 828.

14. Remove and retain the hinge end of fittings "R" by extracting 4 off 1/4" countersunk screws from special nuts. Discard the screws and nuts.

15. Remove and discard the radius rods as per Section 5, R.A.A.F. Publication No. 828.

16. From the undercarriage jack "P", remove and discard the fork end. Retain the lock nut.

17. Reassemble undercarriage jack using the lock nut removed and retained at paragraph 16.

18. Assemble the new radius rods together with the hydraulic jack to undercarriage diaphragms in wing, as per Section 5, R.A.A.F. Publication No. 828, using bolts removed at paragraph 15.

19. Deflate the tyre and remove the outer cover (discard) and inner tube from wheel. Retain the tube and wheel.

20. Examine the inner tube, and if its condition is satisfactory, reassemble together with the new outer cover (Item No.1) to the wheel retained at paragraph 19. Inflate tyre to 80 lbs. per sq.in.

21. Refit the hinge end fitting "R" retained at paragraph 14 to the new compression legs (Items Nos. 6 and 7) with countersunk bolts (Items Nos. 22 and 23) and special nuts (Item No. 12). Centre pop thread of bolt to lock nut.

22. Reassemble the undercarriage leg to the wing pick ups "Q" using the bolts removed at paragraph 13.

23. Fit the new micro switch cradle (Item No. 9) to the upper torque link on left-hand undercarriage leg, using the bolts retained at paragraph 9, wire the lock heads together. Fit the new striker pin (Item No. 10) to the new striker arm (Item No. 8) using the nuts retained at paragraph 9. Assemble to the lower torque link with the bolts retained at paragraph 9. Wire the lock heads together.

24. Assemble the new brake unit (Item No. 2) together with the reworked locking plate retained at paragraph 12, to the undercarriage legs with bolts (Item No. 17) attaching the locking plates (leave loose until paragraph 26) and bolts (Item No. 13). Assemble 2 off nuts (Item No. 14) to bolts on either side of the torque links and 1 off to the bottom bolt. Fit the nuts (Item No. 15) to remainder of the bolts.

25. Reassemble the pneumatic brake line "W" to the undercarriage leg using the parts removed at paragraph 12.

26. Reassemble the fixed fairing to the undercarriage leg using parts retained at paragraph 11. Bottom forward pick up and fairing are to be assembled to the leg using one off eye bolt (Item No. 11) and one off eye bolt retained at paragraph 11, bolt (Item No. 21), and three of 5/16" simmonds nuts retained at paragraph 11. Packing washers (Item No. 24) together with those removed at paragraph 11 are to be used as required. Assemble the bottom rear pick up with one off eye bolt retained at paragraph 11 and bolt (Item No. 20) together with two off 5/16" simmonds nuts retained at paragraph 11. Packing washers (Item No. 24) together with those removed at paragraph 11 are to be used as required. Assemble attachment lug on the brake line, under nut on the forward pick up.

Note. - It may be necessary to dish fairing skin locally to clear pin through the torque link joint. If so, then this dishing will be in the form of an arc, similar to that described by the pin when leg is compressed.

27. Attach the micro switch cables to the undercarriage leg and fixed fairing with clips, nuts, bolts, screws, etc., retained at paragraph 10. Reconnect cable to the micro switch retained at paragraph 9 and fit switch to cradle on the torque links, using bolts (Item No. 18) and nuts (Item No. 19). Centre pop thread of bolt to lock.

28. Assemble the wheels to the undercarriage legs as per Section 5, R.A.A.F. Publication No. 828, using washer nut and split pin provided with the new leg.

29. Completely reassemble the wheel unit as per Section 5, R.A.A.F. Publication No. 828, making the necessary adjustments as detailed in Section 4, Chapter 3, R.A.A.F. Publication No. 828, together with the adjustment detailed for fixed fairings in Section 5 of the above publication.

Drawings

30. G001026A Assembly of U/C Locking Switch.

G001024-5 Assembly of Fixed Leg Fairing - Main U/C.

These drawings will be available on demand.

Effect on Weight and Balance

31. The effect of this modification on the weight and balance of the aircraft is negligible.

References: R.A.A.F. Files 9/84/91 and 150/4/7906.
De Havilland (Aust.) Modification No. V.1,
De Havilland (Aust.) Instruction Leaflet 143.
Air Ministry Modification 143.

Date of Issue: 19th January, 1951.

Air Force Head-Quarters

Technical Order

VAMPIRE MODIFICATION NO.3

Application: A79-1, A79-2 and A79-3

Classification: Class. 4

WING RIB NO. 2 - ALTERATION TO ACCOMMODATE 11" STROKE MAIN UNDERCARRIAGE LEG

Introduction

1. This order authorizes a modification to wing rib No. 2 to accommodate 11" stroke main undercarriage leg.

Note. - This modification must be carried out before Vampire Modification No. 2 or the approved equivalent, De Havilland (Aust.) Mod. No. V.1, is incorporated.

Embodiment

2. This modification is to be embodied during complete overhaul, or, if and when it becomes necessary to incorporate Vampire Modification No. 2.

3. The incorporation of this modification does not involve the use of any special tools.

4. The work will take approximately 600 man-hours per aircraft.

Supply

5. The following parts will be required to complete one modification set.

Item No.	Ident. No.	Part No.	Nomenclature	No. off per a/c.	Stores Class.
1		Z004455ND	Stiffener Channel left-hand	1	
2		Z004456ND	Stiffener Channel right-hand	1	
3		Z004461ND	Packing, 12 SWG left-hand	1	
4		Z004462ND	Packing, 12 SWG right-hand	1	
5		Z004457ND	Packing, 9" x 1'6" x 14 SWG. DTD 390 or DTD 610	2	
6		00Q33AND	Pipe Assembly - Flap Down left-hand	1	
7		00Q34AND	Pipe Assembly - Flap Down right-hand	1	
8		00Q37AND	Pipe Assembly - Flap Up left-hand	1	

Item No.	Ident. No.	Part No.	Nomenclature	No. off per a/c.	Stores Class.
9		00Q38AND	Pipe Assembly - Flap Up right-hand	1	
10		00Q41AND	Pipe Assembly D/Brake on left-hand	1	
11		00Q42AND	Pipe Assembly D/Brake on right-hand	1	
12		00Q45AND	Pipe Assembly D/Brake off left-hand	1	
13		00Q46AND	Pipe Assembly D/Brake off right-hand	1	
14		00Q49AND	Pipe Assembly - Pilot Pressure	1	
15		00Q53AND	Pipe Assembly - Pilot Static		
16		00Q27A	Block - Clamp	6	
17	A52/98914 A	Q98914A	Block - Clamp	3	
18	H128F/30290	AS2227/ 608	Rivets, SN.HD 3/16" x $\frac{1}{2}$" long	As reqd.	
19	H128F/30283	AS2227/ 508	Rivets, SN.HD 5/32" x $\frac{1}{2}$" long	As reqd.	
20	H128F/6 2264	AS2229/ 608	Rivets, 90° Csk. 3/16" x 1/2" long	4	
21	H28/10216	CGI	Nut, Anchor, 2BA Simmonds	6	
22	H128F/62233	AS2229/	Rivets, 90° Csk. 3/32" x 1/2" long	12	
23	H28/7173	A1/16C	Bolt, 2BA x 2.0" long	3	
24	H28/7077	A1/10C	Bolt, 2BS x 1.4" long	3	

6. The above items will be supplied to Modification Section, No. 2 Aircraft Depot by De Havilland Aircraft Pty. Ltd. and issued to units in accordance with the number of aircraft requiring modification.

7. Of the following items, Items 25 to 36 inclusive will be rendered obsolete and Items 37 to 39 rendered redundant by the incorporation of this modification and are to be disposed of in accordance with current authorized procedure.

Item No.	Ident. No.	Part No.	Nomenclature	No. off per a/c.	Stores Class.
25		Q00299	Block, Clamp	3	
26		Q00254	Block, Clamp	3	
27		Q00295AND	Pipe Assembly Flap Down left-hand	1	
28		Q00342AND	Pipe Assembly Flap Down right-hand	1	
29		Q00296AND	Pipe Assembly Flap Up left-hand	1	
30		Q00343AND	Pipe Assembly Flap Up right-hand	1	
31		Q00291AND	Pipe Assembly - Dive Brake on left-hand	1	

Item No.	Ident. No.	Part No.	Nomenclature	No. off per a/c.	Stores Class.
32		Q00304AND	Pipe Assembly - Dive Brake on right-hand	1	
33		Q00292AND	Pipe Assembly - Dive Brake off left-hand	1	
34		Q00345AND	Pipe Assembly - Dive Brake off right-hand	1	
35		Q00290AND	Pipe Assembly - Pilot Pressure	1	
36		Q00289AND	Pipe Assembly - Pilot Static	1	
37	H28/7075	A1/5C	Bolt, 2BA x .9" long	12	
38	H28C/8516	AS470/C	Washer, 2BA	6	
39	H28/10216	CGI	Nut, Anchor, 2BA Simmonds	12	

Method of Incorporation

8. (a) Jack up aircraft and remove undercarriage legs as per Section 5, of Australian Air Publication No. 828.

(b) Remove inboard fuel tank as per Section 5, A.A.P. No. 828.

(c) Remove structure, which passes around tank, and is retained in tank bay with four round head bolts into rib 1 and four through false spar.

(d) In tank bay, remove clamp blocks securing vent, and drop tank fuel and fuel pressurizing pipes to rib 2. Unclip hose joints on outboard side of rib 2 and on rear face of main spar. Remove and retain pipes together with all bolts, clips, clamp block &c.

(e) Remove electrical conduits from breeze plugs on rib 1.

(f) From rib 2 and main spars, remove four hydraulic pipes (flaps and dive brakes) and two A.S.1 lines (pilot and static left-hand wing only) by unscrewing connexions to rib 1 and coupling nuts positioned towards the aft end of rib 2. Discard four hydraulic pipes and two A.S.1 pipe lines. Retain all clamp blocks, bolts and washers with the exception of three of the five blocks positioned along rib 2 which are to be discarded together with their respective bolts and six of the twelve washers. Retain six washers for fitment to new assembly.

(g) Carry out modification to rib 2 in accordance with De Havilland Drawing Z004453-4 using Items 1 to 5 inclusive and Items 18 to 22 inclusive.

Note. - The hole in rib 2 is enlarged towards the top only i.e. dimensions 5.35" (2.9" x 2.45" Rad.) from chord line is the same as that for the original ribs.

(h) Clean out all swarf from inside wing structure.

(j) Reinstall piping in the wing so that clamp blocks (Item 16) through which pass hydraulic pipes (Items 6 to 13) are positioned within the reinforcing channel. Double bank these clamp blocks with clamp blocks (Item 17) and A.S.1 lines (Items 14 and 15) (left-hand wing only). Assemble as a whole, to three anchor nuts fitted at operation (g) using bolts (Item 23) left-hand wing and bolts (Item 24) right-hand wing, with washers retained at operation (f) and electrical conduit clips, fitted under heads.

Note. - It may be necessary to slightly alter the form of pipes at the aft end of rib 2 to enable coupling joint to be made to new pipes.

(k) Reassemble electrical conduits to breeze connexions on rib 1.

(l) Refit vent and drop tank supply and pressurizing pipes previously removed at operation (d).

(m) Reassemble structure (removed at operation (c)) in the tank bay.

(n) Reinstall fuel tank as per Section 5, A.A.P. No.828.

(o) Reassemble and check operation of main undercarriage legs as detailed in Section 5, A.A.P. No. 828.

Drawings

9. Drawings Nos. Z004453-4, Q00286 and Q00287 may be obtained on demand from Air Force Head-Quarters.

Effect on Weight and Balance

10. The effect of the incorporation of this modification on the weight and balance of the aircraft is as follows:-

Item	Weight lbs. + -	Arm ins. + -	Moment lb.ins. + -
Installation, complete	+ 6	Nil	

References: Files R.A.A.F. 9/84/242 and 150/4/7907,
De Havilland (Aust.) Mod. V.29,
De Havilland (Aust.) Instruction Leaflet 144.

Date of Issue: 4th May, 1951.

Restricted

Air Force Head-Quarters

Technical Order

VAMPIRE MODIFICATION NO. 4

Application: See paragraph 2.

Classification: 2

DROP TANK TRANSFER SYSTEM - INTRODUCTION OF ADDITIONAL PRESSURE REDUCING VALVE

Introduction

1. This modification introduces an additional pressure reducing valve in the drop tank fuel transfer system as the existing system fails to transfer fuel when one drop tank is empty or becomes punctured.

Embodiment

2. This order is applicable to five Vampire Mk. 30 aircraft not incorporating the approved equivalent, De Havilland (Aust.) Mod. No. V.28, and to Vampire Mk. 5 aircraft A78-3, and is to be embodied by units holding these aircraft as soon as possible and not later than the next minor inspection.

3. No special tools are required.

4. The incorporation of this modification will take approximately 90 man-hours.

Supply

5. The following parts will be required to complete one modification set:-

Item No.	Ident. No.	Part No.	Nomenclature	No. off per a/c.	Stores Class.
1	T27G/2081	AHO.19208	Valve, pressure reducing, Dunlop	1	
2	A79/500831	LOO.190A	Bracket, mounting	4	
3		OOL.83	Plate, mounting	2	
4		OOL.77	Block, clamp	1	
5		OOL.95(AND)	Pipe, assembly	1	
6		OOL.91(AND)	Pipe, assembly	1	
7		OOL.85(AND)	Pipe, assembly	1	
8		OOL.101(AND)	Pipe, assembly	1	
9		OOA.51(ND)	Plate Blanking	1	
10		OOA.53(ND)	Plate, blanking	1	
11	H28/25992	DHS.30/36	Clip	2	C
12	H28/6169	AGS.956/B	Nipple 1/4"	1	C
13	H28/6170	AGS.956/C	Nipple 3/8"	1	C
14	H28C/10610	AGS.1118B	Piece, tee	1	C
15	H28/6998	6A1/1C	Bolt, 2BA x .5" long	7	C
16	H28/7014	6A1/7C	Bolt, 2BA x 1.1" long	4	C
17	H28/7076	6A1/8C	Bolt, 2BA x 1.2" long	2	C
18	H28/5851	GP1	Nut, pinnacle 2BA	7	C

Item No.	Ident. No.	Part No.	Nomenclature	No. off per a/c.	Stores Class.
19	H28/5852	EP1	Nut, pinnacle, $\frac{1}{4}$"BSF	8	C
20	H28/5897	CG1	Nut, pinnacle anchor, 2BA	2	C
21	H128F/ 59794	1210	Washer, shakeproof, 2BA	4	C
22	H28C/3072	AGS160/D	Washer, plain 1/4"	8	C
23	H28C/8516	AS.470C	Washer, 2BA	2	C
24	H128F/ 62230	AS.2229/ 304	Rivets, 3/32" x 1/4" long C'sk. 90°	4	C
25	H128F/ 15099	AS.2227/ 304	Rivets, 3/32" x 1/4" long SN.HD	3	C

6. The above items will be supplied to Modification Section No. 2 Aircraft Depot by the De Havilland Aircraft Pty. Ltd., whence they will be issued to units on demand.

7. The following items are rendered redundant by the incorporation of this modification and are to be disposed of in accordance with current authorized procedure.

Item No.	Ident. No.	Part No.	Nomenclature	No. off per a/c.	Stores Class.
26		L002131(AND)	Pipe, assembly	1	
27		P001591(ND)	Pipe	1	
28		P001613(ND)	Pipe	1	
29		P001547	Connection, banjo	1	
30		P001545	Bolt, banjo	1	
31		P002657	Connection, 2-way	1	
32		P001589	Pipe	1	
33		CBA	Grommet, Connolly, rubber	1	
34		DHS.159E/20	Joint, hose	4	
35	H28C/6770	AGS.568/E	Washer	2	
36	H28/10154	AGS.605/00	Clip, jubilee	8	
37		A1/3C	Bolt 2BA x .7" long	3	
38	H28/10288	CA1	Nut aerotight	3	
39	H28C/8516	AS.470C	Washer 2BA	3	C

Method of Incorporation

8. Remove top engine cowl as per Section 5, Australian Air Publication No. 828.

9. Remove and discard pipe (Item No.26) running from bottom pressure reducing valve to hose joint at 2-way connection on port side of fire wall. Retain nipple and discard hose joint and clip. (Items Nos. 34 and 36).

10. Disconnect pipe running from 2-way connection to hose joint at rib 1. Discard pipe (Item No. 32) and hose joint and clips (Items Nos. 34 and 36) on 2-way connection end.

11. From similar location on starboard side detach pipe from hose joint at rib 1. Disconnect and discard hose joint and clip (Items Nos. 34 and 36) on aft side of fire wall and remove and discard pipe (Item No. 28).

Note 1: If this modification is incorporated during a period when the main fuel tank is removed, then the following procedure will be adopted.

12. From forward face of fire wall, disconnect pressurizing pipe from hose joint on banjo connection on port side. Discard hose joint and clip (Items Nos. 34 and 36).

13. Remove pipe from rubber grommet on starboard side and discard (Item No. 27).

14. On port side undo banjo bolt and discard bolt, banjo connections and washers (Items Nos. 29, 30 and 35).

15. Remove and discard 2-way connection (Item No. 31) from aft face of firewall. Discard bolts, nuts and washers (Items Nos. 37, 38 and 39).

16. Blank off hole in bulkhead with blanking plate (Item No. 10) fitted to forward face using 3 off each bolts and nuts (Items Nos. 15 and 18).

17. From starboard side of bulkhead remove and discard rubber grommets (Item No. 33).

18. On forward face of bulkhead fit blanking plate (Item No. 9) using 3 off 3/32" rivets (Item No. 25).

Note 2: If this modification is carried out when there is no necessity to remove the main tank, then, having carried out procedure detailed in paragraphs 8 to 11, the open ends of the 2-way connection and pipe are to be suitably blanked off. Procedure as detailed in paragraphs 12 to 18 must be incorporated at the first major overhaul, or, when and if the necessity arises for removal of the main fuel tank.

19. Disconnect pipes (retain nipples) to and from pressure reducing valves mounted on starboard side of auxiliary gear box.

20. Remove mounting from gear box and reducing valves from mounting. Retain valves and all nuts, bolts and washers.

21. Modify mounting bracket as per De Havilland Drawing No. LOO.2109A Issue C1 using anchor nuts (Item No. 20) and rivets (Item No. 24).

22. Refit top pressure reducing valve (AHO.19682) to bracket and re-assemble to gear box using nuts, bolts and washers retained from operation detailed in paragraph 20.

23. Incorporate modified type of installation as detailed on De Havilland Drawing POL.89A, using Items Nos. 1 to 19 and 21 to 23 together with pressure reducing valve, nipple and nuts and bolts retained at earlier operations.

24. Recouple both the outlet and inlet pipes to canopy seal pressure reducing valves using nipples retained at earlier operations.

25. Couple the other leg of branch pipe line (to canopy seal P.R. valve) to tee piece on fuel pressurizing system.

26. Blank off drop tank pressure delivery connection at junction block on underside of wings. Apply pressure of 50 lb. per sq. in. to inlet side of pressure reducing valves and observe that there is no appreciable drop. Replace original nut.

27. Replace top engine cowl as per Section 5, Australian Air Publication No. 828.

Drawings

28. Drawings Nos. LOO.2109A (Issue C1) and OOL.89A will be made available on demand from Air Force Head-Quarters.

Effect on Weight and Balance

29. The effect of the incorporation of this modification on the weight and balance of the aircraft is as follows:-

	Weight lb.	Arm in.	Moment lb. in.
Installation complete	+ 2	+ 12	+ 24

30. Amendments to Weight Sheet Summary will be consolidated and issued by Air Force Head-Quarters.

References : Files R.A.A.F. 9/84/146, 9/84/294 and 150/4/7908.
De Havilland (Aust.) Mod. No. V.28.
De Havilland (Aust.) Instruction Leaflet 145.

Date of Issue : 27th July, 1953.

T53

Restricted

Air Force Head-Quarters

Technical Order

VAMPIRE MODIFICATION NO. 5

Application: See paragraph 2

Classification: 2

WING RIBS 6, 8 AND 9 - REINFORCEMENT

Introduction

1. This modification introduces a method of reinforcing wing ribs 6, 8 and 9 in order to eliminate buckling of the ribs and rippling of the wing skin.

General

2. The modification is applicable to Vampire Mk. 5 aircraft A78-3 and to fifteen (15) Mk. 30 Vampire aircraft not incorporating the approved equivalent modification De Havilland (Aust.) Modification No. V.62 and is to be incorporated as follows:-

(a) Aircraft in use : Not later than next minor inspection after receipt of modification sets.

(b) Aircraft undergoing repair or inspection : During such repair or inspection.

(c) No special tools are required.

(d) The work will take approximately 60 man-hours per aircraft.

Supply

3. The following parts are required :-

Item No.	Ident. No.	Part No.	Nomenclature	No.off per a/c.	Stores Class.
1		00D773ND	Reinforcing channel L.H.	1	
2		00D774ND	Reinforcing channel R.H.	1	
3		00D777ND	Reinforcing channel L.H.	1	
4		00D778ND	Reinforcing channel R.H.	1	
5		00D781ND	Reinforcing channel L.H.	1	
6		00D782ND	Reinforcing channel R.H.	1	
7		00D805ND	Packing outboard	2	
8		00D807ND	Packing inboard	2	
9		00D809ND	Packing outboard	2	
10		00D811ND	Packing inboard	2	
11		00D813ND	Packing outboard	2	
12		00D815ND	Packing inboard	2	
13		D003303S.F	Stringer bkt. (Undrilled) L.H.	3	
14		D003304S.F	Stringer bkt. (Undrilled) R.H.	3	

Item No.	Ident. No.	Part No.	Nomenclature	No.off per a/c.	Stores Class.
15		T.L.P. 530/D/B.S.	Rivet	236	C
16		T.L.P. 429/D/B.S.	Rivet	208	C
17		T.L.P. 537/D/B.S.	Rivet	12	C
18	H28/7001	Al/1 BR	Rd.Head bolt	6	C
19	H28/754	Al6/Y/B.T	Thin nut	6	C

4. Items Nos. 1 to 19 will be supplied to Modification Section, No. 2 Aircraft Depot, by the De Havilland Aircraft Pty. Ltd. and issued to units on demand.

5. Items Nos. 20 and 21 will be rendered obsolete by the incorporation of this modification. Items Nos. 22 and 23 are to be discarded.

Item No.	Ident. No.	Part No.	Nomenclature	No.off per a/c.	Stores Class.
20		D003303	Stringer Bkt.	3	
21		D003304	Stringer Bkt.	3	
22	H28/7001	Al/1 BR	Rd. Head bolt	6	C
23	H28/754	Al6/Y/B T	Thin nut	6	C

Method of Incorporation

6. Remove the outboard fuel tanks as per Australian Air Publication No. 828, Section 5.

7. Modify ribs 6, 8 and 9 as shown on Drawing No. A.11367, Sheets 1 and 2 attached.

8. Reinstall fuel tanks and check for leaks, &c.

Drawings

9. Drawing No. A.11367 Sheets 1 and 2 (Issue 2) is attached hereto.

Effect on Weight and Balance

10 The effect of the incorporation of this modification on the weight and balance of the aircraft is as follows:-

Fixed Equipment

Item	Weight + (lb.) -	Arm + (in.) -	Moment + (lb.in.) -
Rib 6 stiffeners and packing	+ 1.18	+ 24.45	+ 29
Rib 8 stiffeners and packing	+ 1.09	+ 27.05	+ 29.5
Rib 9 stiffeners and packing	+ 1.00	+ 26.40	+ 26.4
		Total	+ 84.9

11. Amendments to the Vampire Weight Sheet Summary will be consolidated and issued by Air Force Head-Quarters.

References: Files R.A.A.F. 9/84/242 and 150/4/7969.
De Havilland (Aust.) Modification No. V.62
De Havilland (Aust.) Instruction Leaflet 161.
Air Ministry Modification No. 766.

Attachments: Drawing No. A.11367 (Sheets 1 and 2) (Issue 2).

Date of Issue: 5th October, 1951.

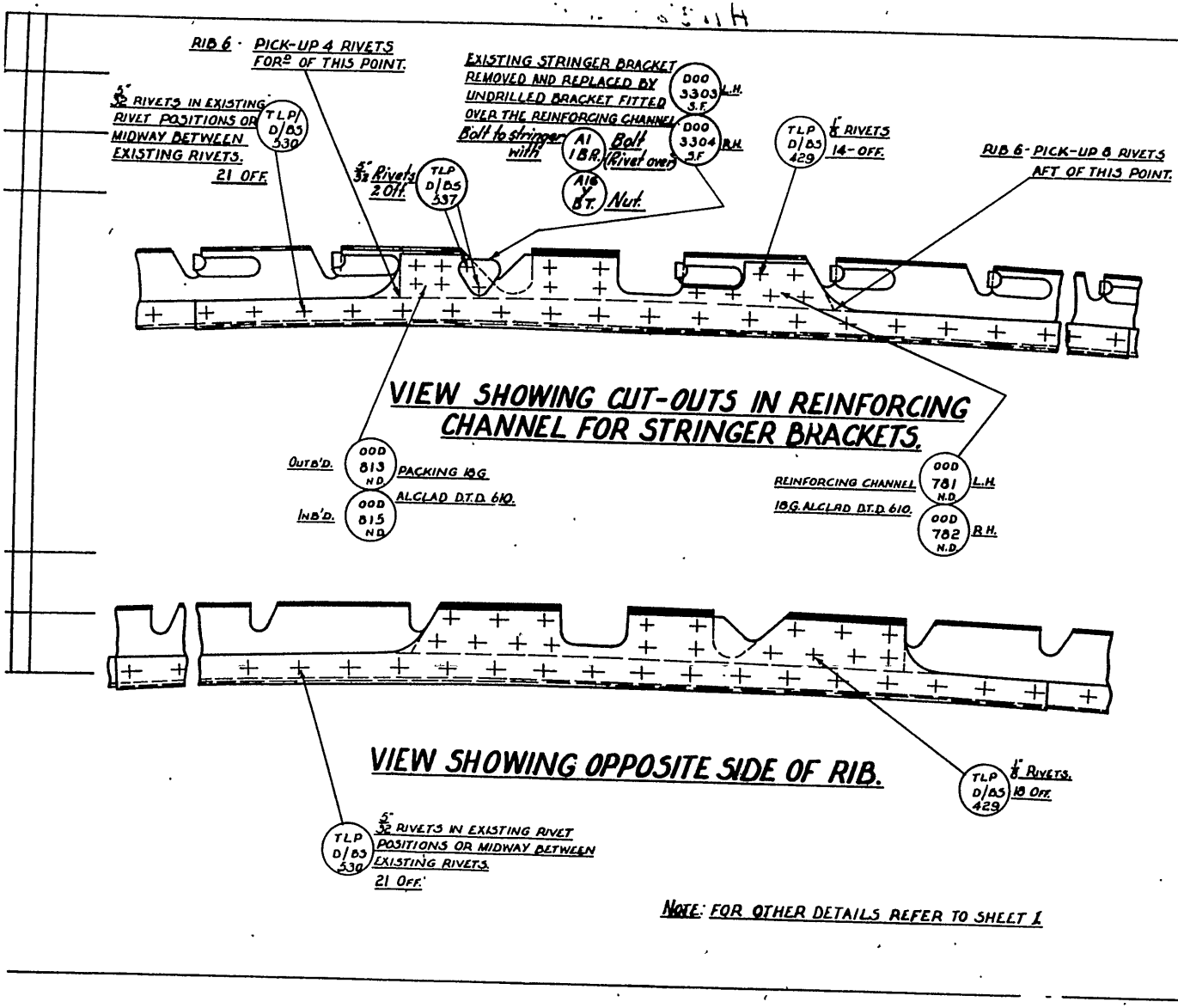
RIB 6 · PICK-UP 4 RIVETS FOR⅝ OF THIS POINT.
EXISTING STRINGER BRACKET REMOVED AND REPLACED BY UNDRILLED BRACKET FITTED OVER THE REINFORCING CHANNEL
D00 3303 L.H. S.F.
D00 3304 R.H. S.F.
Bolt to stringer with
A1 1BA Bolt (Rivet over)
A1B BT. Nut.
5" 32 RIVETS IN EXISTING RIVET POSITIONS OR MIDWAY BETWEEN EXISTING RIVETS. 21 OFF.
TLP D/B5 330
5" 32 Rivets 2 Off.
TLP D/B5 337
TLP D/B5 429
⅛" RIVETS 14-OFF.
RIB 6 - PICK-UP 8 RIVETS AFT OF THIS POINT.
VIEW SHOWING CUT-OUTS IN REINFORCING CHANNEL FOR STRINGER BRACKETS.
OUTB'D.
OOD 813 N.D.
PACKING 18G ALCLAD D.T.D 610.
INB'D.
OOD 815 N.D.
REINFORCING CHANNEL 18G. ALCLAD DT.D 610.
OOD 781 N.D. L.H.
OOD 782 N.D. R.H.
VIEW SHOWING OPPOSITE SIDE OF RIB.
TLP D/B5 429 18 Off. ⅛" RIVETS.
TLP D/B5 330
5" 32 RIVETS IN EXISTING RIVET POSITIONS OR MIDWAY BETWEEN EXISTING RIVETS. 21 OFF.
NOTE: FOR OTHER DETAILS REFER TO SHEET 1
de HAVILLAND DRG No 00M161 SHEET 2. Iss. 2
TITLE.
REINFORCING OF CENTRE RIB 6.
ISSUED BY
DIRECTORATE OF TECHNICAL SERVICES R.A.A.F.
REFERENCE No
COMPONENT OF
WING PORT AND STARBOARD
MACHINE
VAMPIRE MK. 30.
ENGINE
TECH. ORDER
VAMPIRE MODIFICATION No 5
Drawing No.
A-1/1367
Sht 1.
Drg B size
Limits unless stated
Decimals ± .010"
Fractions ± 1/32"
Angles ± 1°
Surface Finish Australian Standard
Eng. Drg. Practice A.S. C21.
Material
Spec.
Treatment
Finish
Scale
Drawn
Traced
Approved
Checked

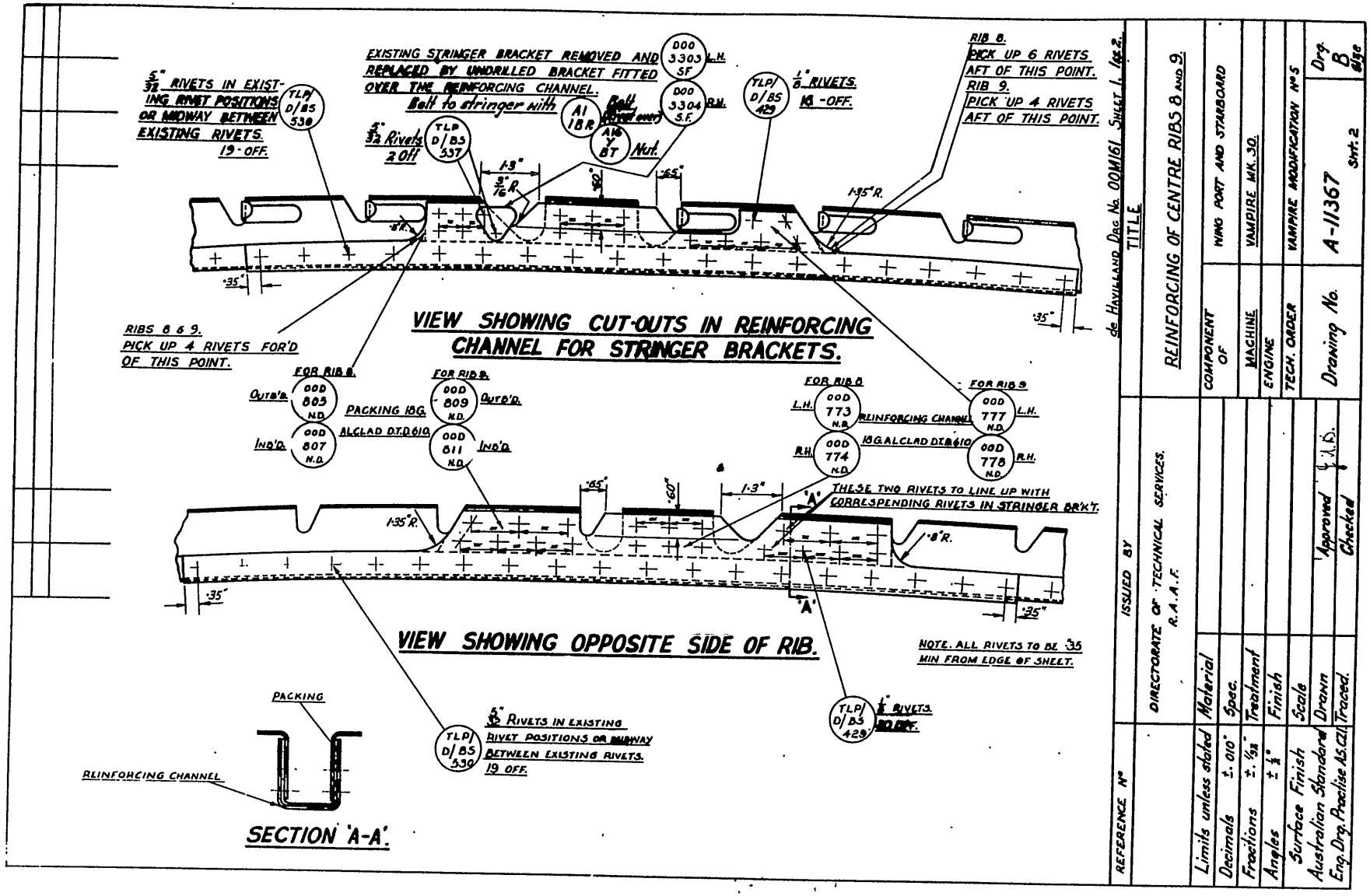

5/32" RIVETS IN EXISTING RIVET POSITIONS OR MIDWAY BETWEEN EXISTING RIVETS. 19 - OFF.
TLP/D/BS 530
EXISTING STRINGER BRACKET REMOVED AND REPLACED BY UNDRILLED BRACKET FITTED OVER THE REINFORCING CHANNEL.
Belt to stringer with
A1 1BR
A16 Y BT
Nut.
DOO 3303 SF
L.H.
DOO 3304 S.F.
R.H.
5/32" Rivets 2 Off
TLP D/BS 537
TLP/D/BS 429
1/8" RIVETS. 18 - OFF.
RIB 8. PICK UP 6 RIVETS AFT OF THIS POINT.
RIB 9. PICK UP 4 RIVETS AFT OF THIS POINT.
1·3"
3/16" R.
·60"
·65"
1·35" R.
·8" R.
·35"
RIBS 8 & 9. PICK UP 4 RIVETS FOR'D OF THIS POINT.
VIEW SHOWING CUT-OUTS IN REINFORCING CHANNEL FOR STRINGER BRACKETS.
FOR RIB 8.
OUTB'D.
OOD 805 N.D.
IND'D.
OOD 807 N.D.
PACKING 18G. ALCLAD D.T.D.610
FOR RIB 9.
OOD 809 N.D.
OUTB'D.
OOD 811 N.D.
IND'D.
FOR RIB 8
L.H.
OOD 773 N.D.
REINFORCING CHANNEL
R.H.
OOD 774 N.D.
18G. ALCLAD D.T.D.610
FOR RIB 9
OOD 777 N.D.
L.H.
OOD 778 N.D.
R.H.
THESE TWO RIVETS TO LINE UP WITH CORRESPENDING RIVETS IN STRINGER BR'K'T.
'A'
VIEW SHOWING OPPOSITE SIDE OF RIB.
NOTE. ALL RIVETS TO BE ·35 MIN FROM EDGE OF SHEET.
PACKING
REINFORCING CHANNEL
SECTION 'A-A'.
TLP/D/BS 530
5/32" RIVETS IN EXISTING RIVET POSITIONS OR MIDWAY BETWEEN EXISTING RIVETS. 19 OFF.
TLP/D/BS 429
1/8" RIVETS. 20 OFF.
de HAVILLAND DRG No. 00M161 SHEET 1. 1 of 2.
TITLE
REINFORCING OF CENTRE RIBS 8 AND 9.
COMPONENT OF
WING PORT AND STARBOARD
MACHINE
VAMPIRE MK. 30.
ENGINE
TECH. ORDER
VAMPIRE MODIFICATION No 5
Drawing No.
A-11367
Sht. 2
Drg. B size
ISSUED BY
DIRECTORATE OF TECHNICAL SERVICES. R.A.A.F.
REFERENCE No
Limits unless stated
Decimals ±.010"
Fractions ±1/32"
Angles ±1/2°
Surface Finish
Australian Standard Eng. Drg. Practise A5.C21
Material
Spec.
Treatment
Finish
Scale
Drawn
Traced.
Approved
Checked

T53

Restricted

Air Force Head-Quarters

Technical Order

VAMPIRE MODIFICATION NO. 6

Application: See paragraph 2

Classification: Class 2.

TAPERED PACKING PIECES UNDER PULLEY BRACKETS ON REAR SPAR - INTRODUCTION

Introduction

1. This modification introduces tapered packing pieces under the oval pulley brackets on the mainplane rear spar in order to improve the run of the rudder and elevator control cables.

General

2. (a) This modification is applicable to Vampire Mk.30 aircraft A79-1, A79-2, A79-484 and A79-586 and is to be incorporated by units holding these aircraft at not later than the next major inspection or when the following components have been removed:-

Engine
No. 1 tanks (port and starboard).
Tail booms.
Flap torque tubes (port and starboard).

(b) No special tools are required.

(c) Four man-hours exclusive of time involved in removing items listed at paragraph 2 (a).

Supply

3. The following parts are required:-

Item No.	Ident. No.	Part No.	Nomenclature	No.off per a/c.	Stores Class.
1		Z001245	Piece, tapered packing	2	
2		Z001246	Piece, tapered packing	2	
3	H28/7143	A1/6E	Bolt, 1/4" B.S.F. x 1.05" long	4	C
4	H28/7083	A1/7E	Bolt, 1/4" B.S.F. x 1.15" long	4	C
5	H28/7084	A1/8E	Bolt, 1/4" B.S.F. x 1.25" long	4	C
6	H28B/5032	AGS784/3	Pin, split	12	C

Note: Items Nos. 1 to 6 inclusive will be supplied to Modification Section, No. 2 Aircraft Depot, by the De Havilland Aircraft Pty. Ltd., whence they will be issued to units in accordance with the number of aircraft requiring modification.

Salvage

4. The following items are rendered redundant by the incorporation of this modification:-

Item No.	Ident. No.	Part No.	Nomenclature	No. off per a/c.	Stores Class.
7	H28/7143	A1/6E	Bolt, 1/4" B.S.F. x 1.05" long	12	C
8	H28B/5032	AGS.784/3	Pin, split	12	C

Method of Incorporation

5. Remove pulley bracket from spar, discarding Items Nos. 7 and 8. Retain nuts and washers.

6. Replace pulley bracket with tapered packing pieces (Items Nos. 1 and 2) fitted between bracket and spar web, and with thin end uppermost, secure with bolts (Items Nos. 3 and 5) and nuts and washers retained in paragraph 5. Drill bolts and pin with Item No. 6.

Drawings

7. Nil.

Effect on Weight and Balance

8. The effect of the incorporation of this modification on the weight and balance of the aircraft is negligible.

References: Files R.A.A.F. 9/84/275 and 150/4/7970.
De Havilland (Aust.) Mod. No. V.48.
De Havilland (Aust.) Instruction Leaflet No. 146.

Date of Issue: 5th October, 1951.

153

Restricted

Air Force Head-Quarters

Technical Order

VAMPIRE MODIFICATION NO.7

Application: See paragraph 2

Classification: Class. 2

PNEUMATIC AND HYDRAULIC LINES - REPOSITIONING ON NO. 4 BULKHEAD

Introduction

1. This modification authorizes the repositioning of the pneumatic and hydraulic lines on the starboard side of No. 4 bulkhead to facilitate servicing.

General

2. This modification is applicable to 7 Vampire Mk. 30 aircraft not incorporating the approved equivalent modification, De Havilland (Aust.) Mod. No. V.42, and is to be incorporated by units holding these aircraft as follows:-

(a) Aircraft in use : As early as possible but not later than next major inspection.

(b) Aircraft undergoing repair or inspection : During such repair or inspection.

(c) No special tools are required.

(d) The work will take approximately 70 man-hours.

Supply

4. The following parts will be required to complete one modification set:-

Item No.	Ident. No.	Part No.	Nomenclature	No.off per a/c.	Stores Class.
1		Z005395 ND	Plate, patch, 16 SWG. alclad D.T.D. 390	1	
2	H128F/62240	AS2229/403	Rivet, csk., 1/8" dia. x 3/16" long	10	

5. Items Nos. 1 and 2 will be supplied to Modification Section, No. 2 Aircraft Depot, by DeHavilland Aircraft Pty. Ltd., whence they will be issued to units on demand.

Method of Incorporation

6. Jack up aircraft and trestle as per Figure 9, Australian Air Publication No. 828.

7. Remove bottom cowl as per Section 5, Australian Air Publication No. 828.

8. Remove gun bay doors.

9. Disconnect and remove accumulator.

10. Break locking wire and disconnect 7 pipes (on starboard side) from both forward and aft faces of fireproof bulkhead.

11. Suitably blank off open ends of pipes.

12. Remove and return bulkhead connections.

13. Carry out modification to bulkhead as per D.H. Drawing No. Z005391A.

14. Remove blanking and reconnect pipes using connections removed in paragraph 12.

15. Function hydraulics as per Section 4, Australian Air Publication No. 828.

16. Check pneumatic system.

17. Lock-wire pipe connections on forward and aft face of fireproof bulkhead.

18. Re-fit accumulator and electrical connections.

19. Check electrical functioning.

20. Replace gun bay doors.

21. Re-fit cowls.

22. Remove trestles.

Drawings

23. De Havilland Drawing No. Z005391A issued on demand.

Effect on Weight and Balance

24. The effect of the incorporation of this modification on the weight and balance of the aircraft is negligible.

References: Files R.A.A.F. 172/1/2891 and 150/4/7971.
De Havilland (Aust.) Modification No. V.42
Air Ministry Modification No. A.S. 702.

Date of Issue: 26th October, 1951.

Restricted

Air Force Head-Quarters

Technical Order

VAMPIRE MODIFICATION NO. 8

Application: A79-1 only

Classification: 4

INTRODUCE ANCHOR NUTS ON FORWARD FACE NO. 4 BULKHEAD

Introduction

1. This leaflet details parts required and work involved to introduce anchor nuts on forward face of No. 4 bulkhead (above lower cross tube).

General

2. In view of the fact that the engine and the main fuel tank must be removed from the aircraft to incorporate this modification it is recommended that it be held over until such time as it is found necessary to replace or remove the electric cables for which the anchor nuts are being provided, or until both the engine and the main fuel tank are removed for some other purpose, whichever is the earliest.

3. Aircraft A79-2 and subsequent will be modified by the manufacturer.

4. The incorporation of this modification will not involve the use of any special tools.

5. The work of this modification complete (assuming engine and main fuel tank are already removed) will take approximately 10 man-hours.

6. The following parts will be required to complete one modification set.

Item No.	Ident. No.	Part No.	Nomenclature	No. off per a/c.	Stores Class.
1	H28/5931(Z)	BJ1	4 BA Single Anchor Nut	10	
2	H28/5896(Z)	BG1	4 BA Double Anchor Nut	16	
3	H28/5897(Z)	CG1	2 BA Double Anchor Nut	5	
4	H128f/62230	AS2229/304	3/32" dia. x 1/4" long c'sk head Mag.Alloy rivets	52	

7. The above items will be supplied by de Havilland Aircraft Pty. Ltd., to sub-modification section No.2 A.D. Modification section will issue to unit, on demand.

8. The following parts will be rendered redundant by the incorporation of this modification and are to be disposed of in accordance with current authorised procedure.

Item No.	Ident. No.	Part No.	Nomenclature	No. off per a/c.	Stores Class.
1	H28/5850	BP1	Nut, Pinnacle 4BA	26	
2	H28/5851	CP1	Nut, Pinnacle 2BA	5	
3	H28c/3070	AGS160B	Plain Washer 4BA	16	

Method of Incorporation - assuming engine and main fuel tank are already removed.

9. Remove 10 screws holding Control Cable Guides and Washer Plate (L.H. & R.H.), and retain.

10. Determine suitable lay-out for single anchor nuts (item 1), drill 10 No. 40 rivet holes and countersink on aft face to suit AS2229 rivets.

11. Add anchor nuts, (item 1) 10 off.

12. Replace control cable guides, using existing screws.

13. Remove 6 screws holding aerial cable fairleads (L.H. only) and retain.

14. Determine suitable lay-out for double anchor nuts (item 2), drill 12, No. 40 holes and countersink on aft face to suit AS2229 rivets.

15. Add anchor nuts, (item 2) 6 off.

16. Replace aerial cable fairleads using existing screws.

Other anchor nuts required are for the attachment of electric cable clips so that the following paragraphs cover the remainder of the modification.

17. Remove screws holding all electric cable clips (excluding those which are attached to the air duct stiffener section, or are below the lower cross tube) and retain the screws.

18. Using existing holes as centres, determine suitable lay-out for double anchor nuts (items 2 and 3), drill 30 No. 40 rivet holes and countersink on aft face to suit AS2229 rivets.

19. Add anchor nuts of appropriate size (item 2-10 off and item 3-5 off).

20. Re-clip electric cables, using existing screws.

21. Discard all plain nuts and washers which have been removed.

22. Record the modification in the airframe log book.

Effect on weight and balance

23. The effect of the incorporation of this modification on the weight and balance of the aircraft is negligible.

Drawings

24. No drawings will be required.

References	:	Files R.A.A.F. 9/84/168 150/4/7972 D.H. Aust. Mod. V47
Origin	:	9th L.M.C. Meeting
Date of Issue	:	30th June, 1953.

Restricted

Air Force Head-Quarters

Technical Order

VAMPIRE MODIFICATION NO. 9

Application: See para. 2.

Classification: Class 2

GUN FIRING RELAYS AND FUEL PUMP SUPPRESSOR - REPOSITIONING

Introduction

1. This modification has been introduced, because it has been found that the fuel pump suppressor tends to foul the ammunition feed chute, and also it has not been possible to service the gun firing relays effectively in their present position.

General

2. The following aircraft are to be modified by holding units. Modification on all other aircraft will be carried out by the manufacturer.

A79: 1, 2, 484, 687, 973, 309 and 170.

3. This modification is to be carried out by electrical personnel in conjunction with armament personnel.

4. No special tools are required and the work should take approximately twenty-one man-hours.

5. De Havilland Australian Modification V53 is the equivalent maker's modification.

6. This modification is to be carried out in conjunction with Vampire Modification No. 37 - "Relays Type Q - Introduction".

Supply

7. The following parts will be required to complete one modification set.

Item No.	Ident. No.	Part No.	Nomenclature	No. off	Stores Class.
1		00N263A	Plate, mounting-gun firing relay units.	1	C
2		00N265A	Conduit Assembly C6A	1	C
3		00N271A	Cable Assembly Fuel Pump	1	C
4		00N273A	Earthing Cable from Gun Relay	1	C
5		DHS.103 Mark 1.	Attachment Ferrules	6	C

Item No.	Ident. No.	Part No.	Nomenclature	No. off	Stores Class.
6		DHS.30 Mark 6.	Cable Clip.	1	C
7		DHS.30 Mark 7.	Cable Clip.	2	C
8		DHS.30 Mark 8.	Cable Clip.	1	C
9		AGS245/22	Screw 4BA x $\frac{1}{2}$" long roundhead.	4	C
10		1208	Washers - 4BA Shake-proof.	4	C
11		AGS253/37	Wood screw No. 6 x $\frac{1}{2}$ roundhead.	2	C

Note: The above items will be supplied by De Havilland Aircraft Pty.Ltd. to Sub-modification Section 2 Aircraft Depot. Sub-modification Section will issue these kits on demand.

Salvage

8. The following items will be rendered redundant by the incorporation of this modification.

Item No.	Ident. No.	Part No.	Nomenclature	No. off	Stores Class.
12		N00207A	Plate, Mounting Gun Firing Relay Units.	1	C
13		N00274A/1	Earthing Relay From Gun Relay.	1	C
14		N00967A	Conduit Assembly C6A.	1	C
15		N00987A	Cable Assem. Fuel Pump	1	C
16		DHS30/2	Cable Clip.	1	C
17		DHS30/4	Cable Clip.	2	C
18		A1/6C	Bolt.	4	C
19		BP1	Nut, Pinnacle, 4BA Plain	8	C
20		CT1	Nut, Pinnacle, 2BA Thin.	4	C

Note: Items 12 to 20 are of no further value to the service and are to be disposed of in accordance with current authorised procedure.

Method of Incorporation

9. Armament personnel are to remove guns in accordance with AAP. No. 828 Section 12.

10. Electrical personnel are to remove gun firing relay units mounting bracket assembly for the Y bracing tube in the main fuel tank bay.

11. Disconnect all wiring to relay units but do not disconnect the inter-connecting cables.

12. Remove cable assembly connecting relay units to terminal block on starboard side of gun bay and retain.

13. Disconnect earthing cable (from relays) at terminal on front face of bulkhead No.4 and discard.

14. Remove conduit C6A by unscrewing breeze socket at the aft face of the No.2 bulkhead and unclipping it along the starboard side of the gun bay.

15. Disconnect all cables at forward terminal block on starboard side of gun bay.

16. Remove terminal block (G5C/449) and retain together with screws.

17. Disconnect the four (4) metal braided cables to the gun firing units and remove from the aircraft. Retain cables for later fitment.

18. Disconnect cables to fuel pump suppressor located on the underside of the ammunition box floor.

19. Remove the cable to the fuel pump and discard.

20. Remove the fuel pump suppressor and retain two (2) only of the mounting screws and washer.

21. Remove the gun bay lamp and retain, together with screws.

22. Retain all existing cable clips and screws which are called for on modified installation as shown on Drawing No. A.11920.

23. Rework existing cable assembly from gun-firing relay units to terminal blocks in the following manner:-

(a) Remove the 10 mm. nylex tubing and cut to new length of 4.0".

(b) Cut cables coded "GF7", "GF6", "GF4" to new lengths of 12.0", 10.0" and 11.0" respectively and then recode.

(c) Replace nylex tubing, but before binding in position, the following dimensions from one end of the nylex to the same end of each respective cable must be; GF7: 2.5", GF6: 3.75", GF4: 3.25".

(d) Bind ends of nylex tubing securely with linen thread and then remake cable ends.

24. Rework existing metal braided cable assemblies from the gunfiring units to the terminal block in the following manner:-

(a) Cut both cable assemblies with cores coded GF6 and GF7 to new overall length of 3'11" each (cut off at stripped end).

(b) Cut both cable assemblies with cores GF4 and GF6 to new overall length of 3'4" each (cut off at stripped end).

(c) Mark off cable ends in a similar manner to the old cables.

25. Remove the relay units (C/W interconnecting cables) from existing mounting plate assembly and remount on the new plate assembly (Item 1) as shown in "View on Arrow 'A'" on drawing A-11920 using existing screws and nuts. Discard the old mounting plate assembly.

26. Add six (6) new attachment ferrules item No. 5 on the underside of the ammunition boxes floor, positioned as shown on drawing No. A-11921.

27. Position fuel pump suppressor on the new attachment ferrules as shown on drawing A-11920 using existing screws and washers and woodscrews (Item No. 11) 2 off.

28. Position new gun firing relay units mounting plate on the new attachment ferrules as per drawing No. A-11920.

29. Position terminal block (G5C/449) on the underside of the ammunition boxes floor, as shown in drawing A-11920, using existing screws.

30. Replace the gun bay lamp in its new position on the underside of the ammunition boxes floor 17.75" from the rear edge of the floor and on the centre line of the floor. Use existing screws.

31. Install new conduit C6A (Item 2) and clip as shown on drawing A-11920.

32. Install the four (4) reworked metal braided cables from terminal block (G5C/449) to the gun firing units as shown on drawing A-11920.

33. Install new cable (item 4) from terminal on the front face of bulkhead No. 4 to gun firing relays and clip as shown on drawing A-11920.

34. Install reworked cable assembly from the gun firing relays to the terminal block (G5A/449).

35. Connect the appropriate cable from conduit C6A to fuel pump suppressor and clip as shown on drawing A-11920.

36. Connect new cable (Item 3) to fuel pump suppressor and clip as shown in drawing A-11920.

37. Wiring connections are to be made in accordance with wiring diagram on drawing A-11920.

38. Before the armament personnel replace the guns the circuit is to be checked electrically to ensure that the modification has been correctly carried out.

39. Armament personnel will replace guns.

Drawings

40. Drawings A-11920 and A-11921 issued on demand.

Effect on Weight and Balance

41. The effect of this modification on the weight of the aircraft is negligible.

42. The effect of this modification on the balance of the aircraft is as follows.

Item	Weight lbs. + −	Change in Arm inches + −	Moment lbs. inches + −
Mounting Plate for gun firing relay units.	Unchanged $2\frac{1}{4}$ lb. ±	-32	-72

43. Amendments to weight sheet summary will be consolidated and issued by Air Force Head-Quarters.

References : H.Q. File 150/4/7973
9/84/36.
D.H. Aust. Mod. V.53.

Date of Issue : 28th September, 1953.

Air Force Head-Quarters

Technical Order

VAMPIRE MODIFICATION NO. 10

Application: Vampire Mk.30
See para. 2

Classification: Class 2

OXYGEN BOTTLE - ADDITION OF LABELS RE TESTING DATES

Introduction

1. At present, unless oxygen bottles are removed from the aircraft, it is extremely difficult to determine test dates.

General

2. This modification is applicable to Vampire Mark 30 aircraft not incorporating the approved equivalent modification, De Havilland (Aust.) Modification No. V65.

(a) This modification is to be incorporated as follows:-

Aircraft-in-use : Not later than next minor inspection after receipt of modification sets.

(b) Aircraft undergoing repair or inspection : During such repair or inspection.

(c) No special tools will be required.

(d) Man-hours : Approximately one (1) man-hour.

Supply

3. The following parts will be required to complete one Modification Set:-

Item No.	Ident. No.	Part No.	Nomenclature	No. off per A/c.	Stores Class.
1	A79/501685	00479	Label - Oxygen Bottles	1	A
2	H28C/2642	AGS253/19	Screws - Wood No. 4 x 3/8" R.H.	2	C
3	K3/156	D.T.D.63A	Enamel - White	As reqd.	C

4. Items 1 and 2 will be supplied against Purchase Order No.443475 by De Havilland Aircraft Pty. Ltd., to Sub-Modification Section, No. 2 Aircraft Depot on which units are to demand for their requirements. Item 3 will be drawn from unit stores stock.

5. No parts will be rendered redundant by the incorporation of this modification.

Method of Incorporation

6. On starboard side open ammunition access door and locate member dividing R.H. front and rear ammunition boxes.

7. Centrally locate label (Item 1) on member and having painted (Item 3) relevant test dates of top and bottom bottles, secure in position with round head screws (Item 2).

8. For details as to correct method of marking of test dates, refer to A.E.I.G. Part 19, Section 1, Instruction 1.

9. Record the modification in the airframe log book.

Drawings

10. No drawings required.

Effect on Weight and Balance

11. The effect of the incorporation of this modification on the weight and balance of the aircraft is negligible.

References : Files R.A.A.F. 9/84/16 and 150/4/7981
De Havilland (Aust.) Mod. V65.
Origin 12th L.M.C. Meeting.

Date of Issue : 30th June, 1953.

Restricted

Air Force Head-Quarters

Technical Order

VAMPIRE MODIFICATION NO. 11

Application: Vampire Mk. 30. See para. 2

Classification: 2

GUNSIGHT MOUNTING BRACKET - PACKING FOR FITMENT OF MARK 4E GUNSIGHT

Introduction

1. When a Mark 4E Gunsight is fitted to the aircraft, the recorder will foul the windscreen unless the gunsight mounting bracket has been packed to suit this installation. This Modification introduces a packing for this purpose.

General

2. This modification is applicable to eight (8) Vampire Mark 30 Aircraft not incorporating the approved equivalent Modification De Havillands (Aust.) Modification No. V68.

3. This modification is to be incorporated as follows:-

(a) Aircraft-in-use : Not later than the next inspection after receipt of modification sets.

(b) Aircraft undergoing repair or inspection : During such repair or inspection

4. No special tools are required.

5. Man-hours : Approximately 8 man-hours.

Supply

6. The following parts will be required to complete one modification set.

Item No.	Ident.No.	Part No.	Nomenclature	No. off per A/C.	Stores Class.
1	E22/2875		Mk.4E Gyro Gunsight	1	A
2	A79/501699	B00 3085	Packing Block	1	
3		AS2808/5/100	Distance Piece	1	
4	H28/7114	A1/19C	Bolt	2	C
5	H28/7771	A25/36C	Bolt	2	C
6	H28/25851	A25/36E ALG	Bolt	1	C

7. Items 2 to 6 will be supplied by De Havilland Aircraft Pty. Ltd. to Sub-Modification Section No.2A.D. on which units are to demand for their requirements. Item 1 will be supplied to demand from R.A.A.F. stores stock for check (or permanent) fitments.

8. The following parts will be rendered redundant by the incorporation of this modification and are to be disposed of in accordance with current authorised procedure.

Item No.	Ident. No.	Part No.	Nomenclature	No. off per A/C.	Stores Class.
7		B001803	Packing Block	1	
8	A79/501667	DHS161/565H	Distance Piece	1	
9	H28/7177	A1/15C	Bolt	2	C
10	H28/7107	A1/31C	Bolt	1	C
11	H28/7129	A1/32C	Bolt	1	C
12	H28/7834	A1/29E	Bolt	1	C

Method of Incorporation

9. Disconnect the electrical & Bowden cable from the Mk.4B gunsight.

10. Remove the recorder plug mounting bracket and emergency light mounting bracket from the gunsight bracket and retain with attachment bolts and screws.

11. Remove the blind flying panel from the instrument panel by removing three pinnacle nuts on face of panel. Do not alter the adjustment of the mounting brackets otherwise the panel will have to be realigned when reinstalled.

12. Unbolt the gunsight mounting bracket attached to the windscreen casting. Remove the existing packing and replace with the packing B003085 (item 2). Discard the distance piece and all bolts except the shorter $\frac{1}{4}$" B.S.F. bolt A1/32E. Retain any shims used in the installation.

13. Replace the gunsight mounting bracket using distance piece and bolts (items 3 to 6) and $\frac{1}{4}$" B.S.F. bolt previously retained. The bracket should be shimmed as in the original installation.

14. Instal a Mk.4E gunsight and camera recorder and increase shimming if necessary so that clearance is obtained between recorder and windscreen without altering the gunsight bracket alignment; i.e. Mounting face of bracket must be

(a) Parallel to A/C. datum plus or minus $\frac{1}{2}^{o}$

(b) Laterally level plus or minus $\frac{1}{2}^{o}$

(This gunsight will normally be removed and the Mk.4B gunsight re-installed unless the latter is unserviceable.)

15. Adjust the range control Bowden cables in accordance with A.P.1275E Vol. 1. Note that the pulley on the throttle lever, and drum on the gunsight rotate in the same direction and that the torque at the central knob on the throttle lever must not exceed 7 ins. lbs. at any position.

16. Re-instal the Blind Flying panel and test connections in accordance with A.A.P. 828 Section 4 Chapter 3 Paragraph 137.

17. Re-attach the recorder plug mounting and emergency light brackets to the gunsight bracket.

18. Check gunsight harmonising in accordance with current authorised procedure.

19. Record the modification in the airframe log book.

Effect on Weight and Balance

20. The effect of the incorporation of this modification on the weight of the aircraft is negligible.

21. The effect of this modification on the balance of the aircraft is as follows:-

Item	Weight lb. ±	Charge in arm in. ±	Moment lb. in. ±
Gunsight & Gunsight Bracket	Unchanged at 12.5	+ .4	+ 5

21. Amendments to weight sheet summary will be consolidated and issued by Air Force Head-Quarters.

Drawings

22. No Drawings will be required.

References : Files R.A.A.F. 9/84/203, 15/6/404 and 150/4/7982
D.H. Aust. Mod.V68
AM. Mod. Vam.695
Origin 13th L.M.C. Meeting

Date of Issue : 30th June, 1953.

...r Force Head-quarters

Technical Order

VAMPIRE MODIFICATION NO 12

Application: See paragraph 2

Classification: Class. 2

ELEVATOR INERTIA WEIGHT - INCREASE TO 20 LB.

Introduction

1. This modification is introduced to increase the longitudinal stability of the aircraft when its centre of gravity is at the aft end of the permissable range.

General

2. This modification is applicable to Vampire Mk.5 aircraft A78-3 and 15 Mk.30 aircraft not incorporating the approved equivalent. De Havilland (Aust.) Mod. No. V.46 and is to be embodied by units holding these aircraft.

3. No special tools are required.

4. The work will take approximately 40 man-hours.

Supply

5. The following parts will be required to complete one modification set:-

Item No.	Ident. No.	Part No.	Nomenclature	No. off per a/c.	Stores Class.
1	-	K00919A	Elevator bias weight attachment fitting	1	
2	-	K00925A	Elevator bias weight	1	
3	H28/7885	A15Y/20C	Bolt	2	
4		CB1	Nut (aerotite)	2	
5	H28C/3071	AGS160/C	Washer	3	
6	H23/5851	CP1	Nut (pinnacle)	3	
7	H28/7077	A1/10C	Bolt	3	
8	H28B/30403	DHS91/216	Ground steel pin	2	
9	H28B/5032	AGS784/3	Split-pins	8	

6. Items Nos. 1 to 9 will be supplied to Modification Section, No. 2 Aircraft Depot by De Havilland Aircraft Pty. Ltd., and issued to units in accordance with the number of aircraft requiring modification.

7. Items Nos. 10 and 11 will be rendered obsolete by the incorporation of this modification and are to be disposed of in accordance with current authorized procedure.

Item No.	Ident. No.	Part No.	Nomenclature	No. off per a/c.	Stores Class.
10	-	K00429A	Elevator bias weight	1	
11	-	K00542A	End fitting elevator bias gear	1	

Method of Incorporation

Removal of existing installation.

8. Locate the existing elevator bias weight arm assembly (Part No. K00497A) which is mounted on the torque tube running between the control column and the left-hand side of the cockpit.

9. Remove the two existing bolts, nuts and washers securing the arm assembly to the fitting on the torque arm and carefully remove the arm assembly from the aircraft.

10. Disconnect the turnbuckle in the aileron control cable where it runs into the control column. Withdraw the split-pin and remove the nut securing the aileron cable pulley on the left-hand side of the cockpit. Remove this pulley and retain all parts.

11. Withdraw the special bolt, nut, washer and split-pin securing the elevator control push-rod to the elevator lever on the end of the torque tube at the left-hand side of the cockpit and retain.

12. Cut the locking wire and withdraw the special bolt together with two shims from the lower pivot position of the elevator level. Note the position of the shims before removal and retain all parts removed.

13. Withdraw the six bolts, nuts, washers and split-pins from around the flange of the torque tube at the connection to the control column and retain.

14. Remove the torque tube assembly from the aircraft.

Bench Operation

15. File off the burred heads and carefully tap out the two H.T. steel pins which secure the end fitting of the elevator bias gear to the torque (take special care to avoid damage to the holes in the tube).

16. Carefully tap out the two pins which secure the flanged end fitting (Part No. K00172) of the torque tube to the main torque tube assembly and remove this fitting (again take care to avoid damage to the holes).

17. Slide the redundant bias weight fitting (Part No. K00429A) off the torque tube.

18. Resecure the flanged end fitting to the torque tube as before, using two new pins (Item No. 8) which are to be slightly countersunk at the ends on assembly.

19. Assemble the new bias weight attachment fitting (Item No. 1) to the position from which the redundant fitting was removed and secure it to the tube, using two off each bolts (Item No. 3), nuts (Item No. 4) and washers (Item No. 5) (washers to be positioned beneath nuts).

Incorporation of Modified Installation

20. Reassemble the torque tube assembly to the aircraft by reversing the instructions given in paragraphs 10, 11, 12 and 13, using the original bolts, nuts, washers and shims, together with new split-pins (Item No. 9) and S.W.G. soft iron locking wire where necessary.

21. Assemble the new 20 lb. elevator bias weight.

22. Finally tighten all bolts and nuts.

23. Check the controls for functioning and movement in accordance with instructions laid down in Australian Air Publication No. 828, Section 7, Chapter 4, and the bias weight for clearances on the instrument panel and rudder pedals through the complete range of movement.

Drawings

24. Nil.

Effect on Weight and Balance

25. The effect of the incorporation of this modification on the weight and balance of the aircraft is as follows:-

Item	Weight lb. + −	Arm, in. ±	Moment lb. ±
Installation complete	+ 7 lb.	- 86.10"	- 602.7 lb.in.

26. Amendments to weight sheet summaries will be consolidated and issued by Air Force Head-Quarters.

References: Files R.A.A.F. 172/1/2891 and 150/4/7983.
De Havilland (Aust.) Modification No. V.46.
De Havilland (Aust.) Instruction Leaflet No. 152.

Date of Issue: 29th June, 1951.

Air Force Head-Quarters

Technical Order

VAMPIRE MODIFICATION NO. 14

Application: Vampire Mk.30 see para. 2a

Classification: Class 2.

LOCKING NUTS ON MICROSWITCH PLUNGER IN NOSEWHEEL - INTRODUCTION

Introduction

1. The present method of locking up the undercarriage and gun safety switch plunger, consisting of a plain nut on either side of a leaf spring, has been found to be inadequate as there is a tendency for the nuts to work loose.

This modification details parts required and work involved in introducing a stiffnut to improve the locking.

General

2. (a) This modification is applicable to Vampire Mk.30 aircraft not incorporating the approved equivalent modification, De Havilland (Aust.) modification V.89.

Note: This modification is not applicable to aircraft incorporating Vampire Modification No.47 or the approved equivalent D.H. Modification V.98.

(b) The modification will be incorporated as follows:-

(i) Aircraft in use : Not later than the next minor inspection after receipt of the modification sets.

(ii) Aircraft undergoing repair or inspection : During such repair or inspection.

(c) No special tools are required.

(d) Man-hours : Approximately fourteen (14) man-hours are required.

3. The following part is required to complete one modification set:

Item No.	Ident. No.	Part No.	Nomenclature	No. Off Per A/C	Store Class
1	H28/10287	AGS2001/B/1	Stiffnut, 4BA Plain Steel	1	

Note: The above item is to be drawn from unit stores.

4. There will be no parts rendered redundant by the incorporation of this modification.

Method of Incorporation

5. (a) Jack up the aircraft to raise the undercarriage wheels clear of the ground (Refer Australian Air Publication 828 Figure 9).

(b) Gain access through the nose wheel bay and locate the gang of three micro-switches which is the undercarriage Up and Gun Safety Switch. This is mounted on the underside of the G.45 Camera and S.C.R.-695-A Radio mounting tray. Remove the plunger from this switch and retain the nuts.

(c) Screw the two existing 4BA thin nuts together on the plunger, so that one locks the other in position.

(d) Reassemble the plunger to the switch using the stiffnut (item 1).

IMPORTANT: Check that the plunger screw does not project through stiffnut more than is necessary for safety requirements. This is to prevent the screw fouling a welded nut on the underside of the Camera and Radio mounting tray when the undercarriage is in the "up" position.

(e) Carry out retraction tests to check the switch plunger setting (see Australian Air Publication 828 section 1 paragraph 30 for indication in cockpit). When the plunger adjustment is satisfactory, tighten the stiffnut and locking nuts.

(f) Remove jacking equipment.

(g) Record the modification in the airframe log book.

Drawings

6. No drawings are required.

Effect on Weight and Balance

7. The effect of the incorporation of this modification on the weight and balance of the aircraft is negligible.

References : Files R.A.A.F. 9/84/91 and 150/4/7985
D.H. Aust. Mod. V89
A.M. Mod. Vam.781
L.M.C. Meeting No.16.

Date of Issue : 3rd May, 1954.

753

Restricted

Air Force Head-Quarters

Technical Order

VAMPIRE MODIFICATION NO. 15

Application: Vampire Mk. 30
See Para. 2

Classification: 2

TO INTRODUCE REDESIGNED STOP PINS FOR ELEVATOR AND RUDDER CONTROLS

Introduction

1. This order introduces redesigned stop pins for elevator and rudder controls as the stop on the elevator quadrant in the cockpit is not operating effectively and the stops on the bottom brackets in the tail booms are insufficient in area to make full contact on the rudder and elevator levers.

General

2. This Modification is applicable to eight (8) Vampire Mk.30 aircraft not incorporating the approved equivalent modification (De Havillands (Aust) Modification No. V66.).

3. This Modification is to be incorporated as follows:-

(a) Aircraft-in-use : Not later than next minor inspection after receipt of Modification sets.

(b) Aircraft undergoing repair or inspection : During such repair or inspection.

(c) No special tools will be required.

(d) Man-hours : Approximately 30 man-hours.

4. The following parts will be required to complete one modification set:-

Item No.	Ident.No.	Part No.	Nomenclature	No. off per a/c.	Stores Class.
1	A79/501675	K00575	Disc	2	A
2	A79/501674	J001659	Pin Stop	6	C
3	H28/9885	AS1882/8E	Bolt, ¼" B.S.F. C'S'K	2	C
4	H28B/5032	AGS784/3	Pin, Split	2	C
5	I1/1444	N.A.	Wire, Locking Soft Iron 20 S.W.G.	As Req.	C

5. The above items will be supplied by De Havillands Aircraft Pty. Ltd. to the Modification Section, No.2 A.D. on which units are to demand for their requirements.

6. The following parts will be rendered redundant by the incorporation of this modification and are to be disposed of in accordance with current authorised procedure.

Item No.	Ident.No.	Part No.	Nomenclature	No. off per a/c.	Stores Class.
6	A79/500430	K00233	Pin, Stop	2	C
7	A79/500300	J00256	Pin, Stop	6	C
8		AGS784/3	Pin, Split	2	C

Method of Incorporation

7. From rear end of each tail boom remove tail fairing, secured to boom with 2 B.A.C's'K bolts. Retain fairing and bolts.

8. Remove rearmost inspection plate from the outboard side of each boom. Retain plate and bolts.

9. On the bottom bracket, (Refer fig. 21, A A P.828) locate the elevator and rudder stop pins.

10. Working from the aft face of the bracket, slacken the respective locknuts and remove the two elevator stop pins in each boom. Discard the pins but retain locknuts for later fitment.

11. On port and starboard sides of cockpit locate the elevator quadrant (reference "E", fig. 89, A.A.P.828).

12. Locate stop pin, which should come into contact with quadrant support casting, when control column is pushed fully forward.

13. Remove split-pin and nut from rear side of quadrant and withdraw pin from quadrant and cable guard clip. Discard pin (item 6) and split-pin (item 8) but retain slotted nut and clip.

14. Pass new bolt (Item 3) through stop disc (Item 1) and assemble to quadrant together with cable guard clip retained at op.(13). Screw slotted nut (also retained at op.(13)) on to bolt and tighten.

15. Using right angle drill, spot through from nut cassillations and lightly mark bolt.

16. Remove bolt from quadrant and bench drill for 1/16" split-pin.

17. Reassemble bolt to quadrant as in op.(14) ensuring that guard clip passes over cable. Tighten nut and fit split-pin (Item 4) in such a manner that it does not interfere with use of quadrant setting plate (stores ref, W4G/25097).

18. Assemble new stop pins items (2) to the bottom brackets in the boom, from the forward face. Screw pins through casting and assemble locknuts (retained at op.(10)), to the bolts on the aft side.

19. Adjust and lock stop pins on fin spar in accordance with Section 4, Chapter 3 A.A.P.828. Drill a No. 52 hole in each stop pin (item 2) similar to those in stop pin (item 7) and then wirelock in pairs using 20 SWG galvanised soft iron locking wire (item 5).

20. Check movement of controls as detailed in A.A.P.828.

21. Refit tail fairings and inspection covers to tail booms using parts retained at ops. 7 and 8.

Drawings

22. No Drawings are required.

Effect on Weight and Balance

23. The effect of the incorporation of this modification on the weight and balance of the aircraft is negligible.

References : Files R.A.A.F. 172/1/2891; 9/84/275 and 150/4/7986
D.H.(AUST) Mod. V66
A.M. Mod. VAM276 Origin 12th L.M.C. Meeting

Date of Issue : 10th April, 1953.

Restricted

Air Force Head-Quarters

Technical Order

VAMPIRE MODIFICATION NO. 16

Application: Mk. 30
(See para. 2a)

Classification: Class 2

TO IMPROVE FUNCTIONING AND ADJUSTMENT OF UNDERCARRIAGE FAIRING MECHANISM

Introduction

1. Prior to the introduction of this modification it was found that the eye bolt in the radius rod was near to the limit of "Safety" position thereby rendering it very difficult for any further adjustment to be made in the event of it becoming necessary.

General

2. (a) This modification is applicable to Vampire Mark 30 aircraft not incorporating the approved equivalent modification De Havilland (Aust.) modification No. V67. Portion of this modification has already been incorporated. New radius rod tubes G00126 (item 1) are to be fitted to Vampire Mark 30 aircraft A79-1, 2 and 4. This new radius rod is 5.4 inch long.

The pins in the wheel door retracting mechanism are to be examined and if it is found that a washer is not fitted between the split pin and the adjacent part, replace with longer pins together with washers (item 5 or 6) and new split pin (item 7).

(b) This instruction is for the incorporation of the complete modification for aircraft requiring same.

(c) No special tools are required.

(d) Man-hours : Approximately twenty (20) man-hours.

Supply

3. The following parts will be required to complete one modification set:-

Item No.	Ident. No.	Part No.	Nomenclature	No. off Per A/C	Stores Class
1	A79/501689	G00126	Tube, Radius Rod	4	
2	M28B/840	SP4V/B14	Pin - Shackle Steel 3/16" dia. .90 long	4	
3	M28B/1019	SP4/B17	Pin - Shackle Steel 3/16" dia. 1.1 long	4	
4	A79/500275	G00323	Pin, Special	4	
5	M280/3072	AGS160/D	Washers M.S. .26 I.D. x .75 O.D.	10	

Item No.	Ident. No.	Part No.	Nomenclature	No. off Per A/C	Stores Class
6	H28C/3071	AGS160/C	Washers M.S. .19 I.D. x .50 O.D.	8	
7	H28B/5032	AGS784/3	Pin, Split 1/16" x 1"	16	
8	H128F/15988	AS455/412	Rivets 1/8" dia. x 3/4" long F.H. or SNP. HD. M.S.	16	

Note: Items 1 to 8 inclusive will be supplied by the De Havilland Aircraft Pty. Ltd. to Sub-modification Section, 2 Aircraft Depot, which will issue to units on demand.

4. The following parts will be rendered redundant by the incorporation of this modification:-

Item No.	Ident. No.	Part No.	Nomenclature	No. off Per A/C	Stores Class
9	A79/500718	G00323 Mk.7	Pin, Special	4	
10	H28B/839	SP4/B13	Pin	4	
11	H28B/842	SP4/B16	Pin	4	
12			Tube	4	
13	H28B/5032	AGS784/3	Pin, Split	16	

Note: Items 9 to 13 inclusive are to be disposed of in accordance with the authorised current procedure.

Method of Incorporation

5. The following sequence of operations is the method for incorporating this modification:-

(a) Withdraw the split pins, washers and special pins (2 off each) securing the radius rods to the wheel door hinge brackets and retain.

(b) Withdraw the split pins and redundant special pins (item 9) (2 off each), securing the radius rods to the wheel door frame (G001595-6A). Remove and retain the radius rods.

(c) Remove and discard the split pins and redundant pins (item 11) (2 off each) securing spring struts to the "U" brackets mounted on ribs 5 in the undercarriage wheel well and replace with pins (item 3) washers (item 6) and new split pins (item 7) (2 off each) re-securing the spring struts in their original positions. The washers are to be placed underneath split pins.

(d) Remove and discard the split pins and redundant pins (item 2) (2 off each) securing the spring struts to the wheel door frame (G001595-6A) and replace with pins (item 2) washers (item 6) and new split pins (item 7) (2 off each) re-securing the spring struts in their original positions.

(e) Unscrew the eyebolt (G00128A) and locknut from the plug insert in the end of the radius rod previously removed in paragraph (b).

(f) File away the heads and carefully tap out the four (4) M.S. rivets holding the two end fittings to the tube which together comprises the radius rod.

(g) Carefully remove the two end fittings from the tube and retain if found not to be unduly worn or damaged. Discard the tube (item 12).

(h) Open up the 8 - 3/32 inch diameter pilot holes in the new radius rod - tube (item 1) to 1/8 inch diameter clear holes (No. 30 drill).

(i) Drill 1 - 1/16 inch diameter inspection hole in tube (item 1) to mate with existing hole in plug (G00249).

(j) Secure the end fittings (G00127A and G00249) to the tube (item 1) by using four (4) new rivets (item 8) identifying the end into which each fitting is to be tapered by the relative position of the rivet holes in the tube (see drawing A.12049).

(k) Screw the eyebolt and locknut into the plug from which it was removed in paragraph (e).

(l) Secure the radius rods to their positions on the wheel door frame by using new pins (item 4) new split pins (item 7) and washers (item 5) (2 off each).

(m) Secure the radius rods in their former positions to the wheel door hinge brackets using original pins, washers and new split pins (item 7) (2 off each).

Note: Eyebolt is to be positioned centrally between bosses in hinge brackets by packing with two (2) washers (item 5) each side.

(n) Jack up aircraft as described in Australian Air Publication 828, Section 4, Paragraph 66, Figure 9.

(o) Adjust wheel door mechanism as per A.A.P. 828 Sect. 5, Figure 58.

(p) Record the modification in the airframe log book.

Drawing

6. Drawing A.12049 is attached.

Effect on Weight and Balance

7. The effect of the incorporation of this modification on the weight and balance of the aircraft is negligible.

References : Files R.A.A.F. 9/84/91 and 150/4/7987
D.H. Aust. Mod. V67
L.M.C. Meeting 13

Attachment : Drawing A.12049

Date of Issue : 7th December, 1953.

NOT SCALE

ISSUE NO	DATE	ALTERATION
	1.10.53	

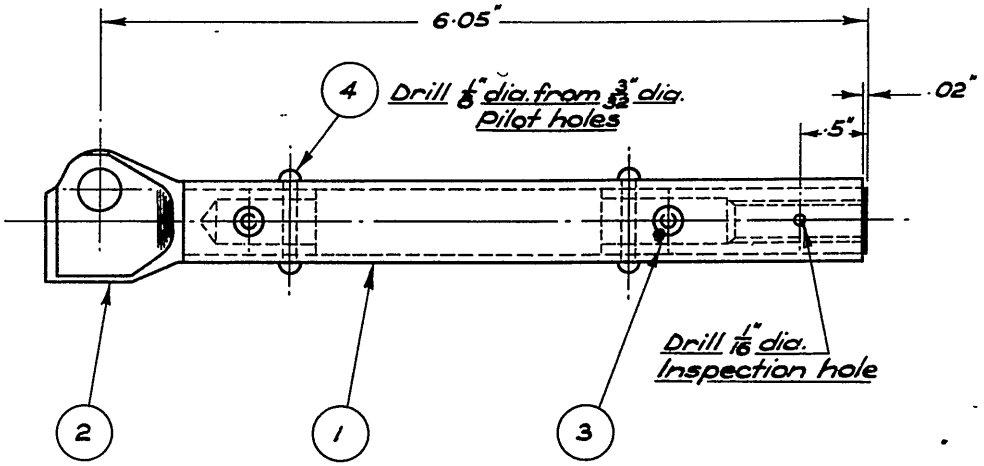

ITEM Nº	PART Nº	IDENT Nº	DESCRIPTION	Nº OFF
4	AS455/412	H128F/15988	1/8" DIA. X 3/4" LG. M.S. SNAP HD. RIVET	4
3	G00249		PLUG	1
2	G00127		STOP	1
1	G00126		TUBE	1

REFERENCE	ISSUED BY	TITLE
	DIRECTORATE OF TECHNICAL SERVICES R.A.A.F.	RADIUS ROD U/C DOOR MECHANISM

ALL DIMS UNLESS STATED		MATERIAL		COMPONENT OF	
DECIMALS	± .010"	SPEC.		MACHINE	VAMPIRE MK. 30
FRACTIONS	± 1/32"	TREATMENT		ENGINE	
ANGLES	± 1/2°	FINISH		TECH. ORDER	VAMPIRE MOD. 16
SURFACE FINISH AUSTRALIAN STANDARD PRACTICE A.S.621		SCALE		DRAWING NO.	A12049
		DRAWN	APPROVED		DRWG. A
		TRACED E.C.J.	CHECKED		

T53C

Restricted

Air Force Head-Quarters

Technical Order

VAMPIRE MODIFICATION NO. 17

Application: Vampire Mk. 30 see para. 2.

Classification: 2

INTRODUCTION OF LUMINOUS POINTER & MARKINGS ON TAIL TRIM INDICATOR

Introduction

1. This order introduces a luminous pointer and markings on tail trim indicator as the indicator is not at present illuminated by the cockpit lighting system.

General

2. This modification is applicable to twelve (12) Vampire Mark 30 aircraft not incorporating the approved equivalent Modification (De Havilland (Aust.) Modification No. V60.)

3. This modification is to be incorporated as follows:-

(a) Aircraft-in-use : Not later than the next minor inspection after receipt of modification set.

(b) Aircraft undergoing repair or inspection. : During such repair or inspection.

(c) No special tools will be required.

(d) Man-hours : Approximately 4 man-hours.

4. The following parts will be required to complete one modification set:-

Item No.	Ident.No.	Part No.	Nomenclature	No. off per A/C.	Stores Class.
1	A79/501683	B00375/2	Label	1	
2	A79/501678	L003215	Pointer	1	
3	H28C/3069	A.G.S.160/A	Washer 6BA Plain	4	C
4	H128F/~~[illegible]~~ 2661	No.4 x $\frac{1}{4}$"	Screw, Parker Kalon Nomenclature "Round Head, Type Z Round No.4 x $\frac{1}{4}$" "	4	C

5. Items 1 to 4 will be made up into modification sets and supplied to Modification Section, No. 2 A.D. from where issues will be made to units on demand.

6. The following parts are rendered redundant by the incorporation of this modification:-

Item No.	Ident.No.	Part No.	Nomenclature	No. off per A/C.	Stores Class.
5		B00375/1	Label	1	
6		L00348	Pointer	1	
7		AS2227/305	Rivets, 3/32" dia SN. Hd.	4	C

7. Items 5 and 6 are to be returned to Instrument Section, No. 2 A.D. to be reworked by luminising.

8. After reworking in the prescribed manner B00375/1 is to be renumbered B00375/2 and L00348 becomes L002315.

9. Item 7 is to be disposed of in accordance with current authorised procedure.

Method of Incorporation

10. Locate tail trim indicator on L.H. side of top centre instrument panel and remove pointer. Retain 4BA screw and shakeproof washer and dispose of pointer (item 6) in accordance with para. 8.

11. Carefully drill out 4 snap-head rivets securing trim indicator label, taking care not to enlarge holes in panel. Discard rivets (item 7) and dispose of label (item 5) in accordance with para. 8.

12. Open out holes in new label (item 1) with No. 26 drill.

13. Fit label to panel using P.K. screws (item 4) and washers (item 3).

14. Fit new pointer (item 2) to indicator body using 4BA screw and shakeproof washer retained at Op.13.

15. Check operation of tail trim indicator.

Drawings

16. No drawing will be required.

Effect on Weight and Balance

17. The effect of the incorporation of this modification on the weight and balance of the aircraft is negligible.

References : Files R.A.A.F. 172/1/2891, 150/4/7988
D.H. Aust. Mod. V60.
A.H. Mod. Vam.760
L.M.C. Meeting No. 12

Date of Issue : 10th April, 1953.

Restricted

Air Force Head-Quarters

Technical Order

VAMPIRE MODIFICATION NO. 18

Application: Vampire Mk.30 see Para.2

Classification: 2

INTRODUCTION OF H.T.S. BOLT IN LIEU OF TAPER PIN ATTACHING BEVEL PINION TO HANDLE SPINDLE IN CANOPY WINDING GEAR

Introduction

1. This order introduces a H.T.S. bolt in lieu of taper pin attaching bevel pinion to handle spindle in canopy winding gear to strengthen attachment and also to provide holes in the gear box casing to permit the removal of bolt.

General

2. This modification is applicable to twelve (12) Vampire Mark 30 aircraft not incorporating the approved equivalent Modification (De Havilland Aust. Modification No. V61.).

3. This Modification is to be incorporated as follows:-

(a) Aircraft-in-use : Not later than next minor inspection after receipt of modification sets

(b) Aircraft undergoing repair or inspection : During such repair or inspection

(c) No special tools are required

(d) Man-hours : Approximately 30 man-hours

4. The following parts will be required to complete one modification set.

Item No.	Ident. No.	Part No.	Nomenclature	No. off per A/C.	Stores Class.
1	A79/501679	A005265	Bolt Special H.T.S.	1	
2	H28/10288	CA1	Nut Aerotight 2BA	1	
3	H28C/3071	AGS160/C	Washer Plain 2BA	1	
4	H128F/62231	AS2229/306	Rivet 3/32" dia. csk.	8	

5. The above items will be supplied by De Havilland Aircraft Pty. Ltd., to Modification Section, No. 2 A.D., which will issue items to units, on demand.

6. The following parts will be rendered redundant by the incorporation of this modification and are to be disposed of in accordance with current authorised procedure.

Item No.	Ident. No.	Part No.	Nomenclature	No. off per A/C.	Stores Class.
5	A79/501212	A00112	Pin Taper	1	
6		CP1	Nut. Simmonds 2BA	1	
7		AS2229/306	Rivet 3/32" dia. C's'k	8	

Method of Incorporation

7. Locate canopy winding gear and torque tube on R.H. side of cockpit (refer fig.50 A.A.P.828).

8. Loosen clamp bolt at Mollart coupling joint on rear end of torque tube.

9. Remove eight 2BA bolts securing bolt ring and canopy winding gear box to fuse side. Remove bolt ring and extract release knob and spring. Retain all parts.

10. Remove gear box from fuse shell and extract torque tube from spline.

NOTE: Peratol seal has to be broken and the utmost care must be exercised to prevent the rubber gasket between rear face of box and fuse shell from being damaged.

11. Thoroughly clean all peratol from components and fuselage using No.604 Peratol solvent.

12. Drill out and discard eight rivets (item 7), securing back plate to body of box. Remove back plate and as much of the grease as possible from inside. Retain back plate.

13. Locate taper pin passing through bevel pinion and remove and discard 2BA nut. Extract taper pin (discard) through existing hole provided in casting.

14. Remove 5 4BA screws in front plate and extract handle assembly complete with shaft etc. Retain all parts.

15. Clean off grease from each component. Assemble bevel gear to shaft and ream the existing hole in gear and the groove in shaft to 7/32" dia.

16. Refer to drawing A11736 and drill 7/16" dia. hole in opposite side of casting to existing 1/4" dia. hole.

17. Remove all dust, swarf etc. from each component. Reassemble the handle and shaft etc. in the housing and secure front plate with five screws retained at Op.(14).

18. Assemble bevel gear to shaft and engage mesh with bevel gear attached to torque tube. Fit new bolt (item 1) washer (item 3) and nut (item 2).

19. Pack box with low temperature grease R.A.A.F. ident. K2/65 and reassemble back plate using rivets (item 4).

20. Having primed the mating faces of gear box and fuse shell with peraclor and if necessary replaced gasket referred to in para. (10), assemble torque tube to splined joint. Liberally apply peratol sealing compound and assemble box to fuse side using parts retained at Op. (9). Tighten clamp bolt on torque tube.

21. Check the winding gear handle for correct psoitioning and the modified system for correct functioning in strict accordance with fig. 50, A.A.P.828.

22. Test cabin pressurising in accordance with section 4 A.A.P.828.

23. Repair external paint finish as necessary.

NOTE: On incorporation of this modification the part number of Canopy Winding Gear Box becomes A002053A/1, R.A.A.F. Ident. A79/501684.

Drawing

24. Drawing All736 herewith attached.

Weight and Balance

25. The effect of the incorporation of this modification on the weight and balance of the aircraft is negligible.

References : Files R.A.A.F. 9/84/67 and 150/4/7989
D.H. Aust. Mod. V61
L.M.C. Meeting No. 12
A.M. Mod. VAM. 761

Attachment : Drawing All736

Date of Issue : 16th April, 1953.

DO NOT SCALE

ISSUE NO.	DATE	ALTERATION	B. I. L.	INITIALS	APPROVED
1	3/2/53				

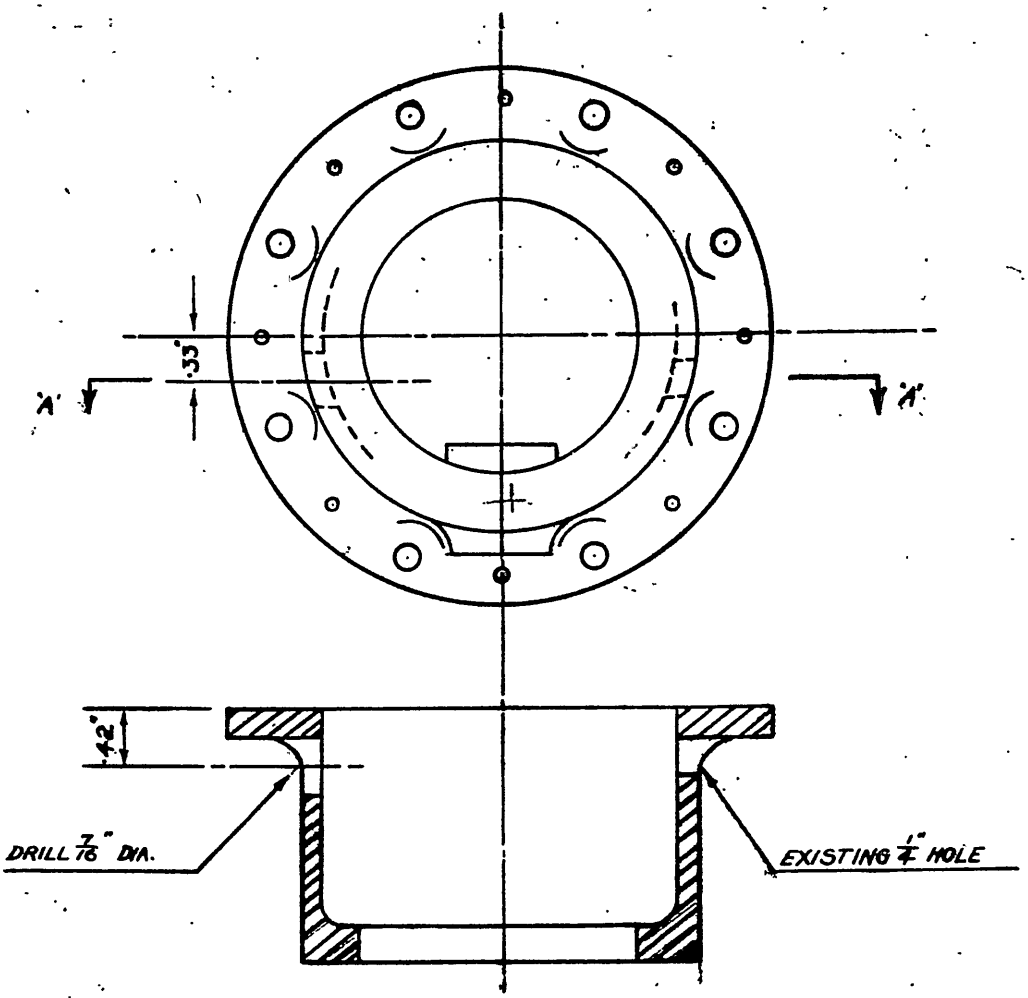

SECTION 'A-A'

D.H. DRG. No 00M58

REFERENCE	ISSUED BY	TITLE
L	DIRECTORATE OF TECHNICAL SERVICES R.A.A.F.	GEAR BOX CASE

LIMITS UNLESS STATED		MATERIAL		COMPONENT OF	CANOPY WINDING GEAR
DECIMALS	± .010"	SPEC.		MACHINE	VAMPIRE
FRACTIONS	± 1/32"	TREATMENT		ENGINE	
ANGLES	± ½°	FINISH		TECH. ORDER	VAMPIRE MOD. No 18
SURFACE FINISH AUSTRALIAN STANDARD ENG. DRWG. PRACTICE A.S.E.21		SCALE		DRAWING NO.	A-11736
		DRAWN	APPROVED		DRWG. A SIZE
		TRACED U.J.S.	CHECKED		

Restricted

153

Air Force Head-Quarters

Technical Order

VAMPIRE MODIFICATION NO. 19

Application: See paragraph 3

Classification: Class. 2

RE-DESIGNED ROLLER SPIGOT BOLT FOR NOSE WHEEL ASSEMBLY - INTRODUCTION

Introduction

1. This modification introduces two re-designed cam roller bolts in the nose wheel, self-centering mechanism, following reports of failure of the existing cam roller spigot bolt.

Embodiment

2. This modification is applicable to ~~thirteen~~ Ten Vampire A/c 19. Mk. 30 aircraft not incorporating the approved equivalent modification, (De Havilland (Aust.) Mod. No. V.38) and English Vampires ~~A78-1~~, A78-2 and A78-3, and is to be embodied by units holding these aircraft as soon as possible but not later than the next minor inspection.

3. No special tools are required.

4. The work will take approximately twelve man-hours per aircraft.

Supply

5. The following parts will be required to complete one modification set:-

Item No.	Ident. No.	Part No.	Nomenclature	No. off per a/c.	Stores Class.
1	A79/ 501617	G001721	Nut, special	1	C
2	501616	G001723	[illegible], cam roller	2	C
3	501623	G001725ND	Bar, locking	1	C

A/c 19. 6. Items 1, 2 and 3 will be supplied to Modification Section, No. 2 Aircraft Depot, by the ~~De Havilland Aircraft Pty Ltd.~~ Commonwealth Aircraft Corporation Pty Ltd December, and issued to units in accordance with the number of aircraft requiring modification.

7. The following parts will be rendered obsolete by the incorporation of this modification and are to be disposed of in accordance with the current authorized procedure:-

Item No.	Ident. No.	Part No.	Nomenclature	No. off per a/c.	Stores Class.
4	A79/ 500714	G00310	Bolt, spigot	1	C
5	500715	G00311	Bolt, collar	1	C

Method of Incorporation

8. (a) Trestle aircraft to raise undercarriage clear of the ground.

(b) Remove nose wheel together with shock absorber strut and self-centering mechanism in accordance with standard procedure.

(c) Refer to relevant air publication or Australian Air Publication, No. 828, and dismantle the nose wheel self-centering mechanism to enable the spigot bolt and collar bolt (Parts Nos. G00310 and G00311) to be removed.

(d) Re-assemble the self-centering mechanism at the same time installing the two new cam roller bolts (Item 2), special nut (Item 1) and locking bar (Item 3) as detailed in Drawing No. A.11306 (attached). Ensure that the locking bar (Item 3) is well rivetted over at both ends when the cam roller bolts have been finally tightened. Pack the top of the casting around the spring with anti-freeze grease. Lock the four bolts securing the top locating plate as before, using 20 S.W.G. locking wire.

Note. - Whilst carrying out this modification, ensure that nut retaining peg slipper is secure and stud end rivetted over. Refer to Drawing No. A.11306 attached.

(e) Re-assemble the shock absorber strut together with the self-centering mechanism and nose wheel to the aircraft in accordance with the standard procedure.

(f) Carry out retraction tests and check for correct functioning.

Effect on Weight and Balance

9. The effect of the incorporation of this modification on the weight and balance of the aircraft is negligible.

References: Files R.A.A.F. 9/84/91 and 150/4/8003.
De Havilland (Anst.) Mod. No. V.38.

Drawing: A.11306 attached.

Date of Issue: 18th May, 1951.

DO NOT SCALE

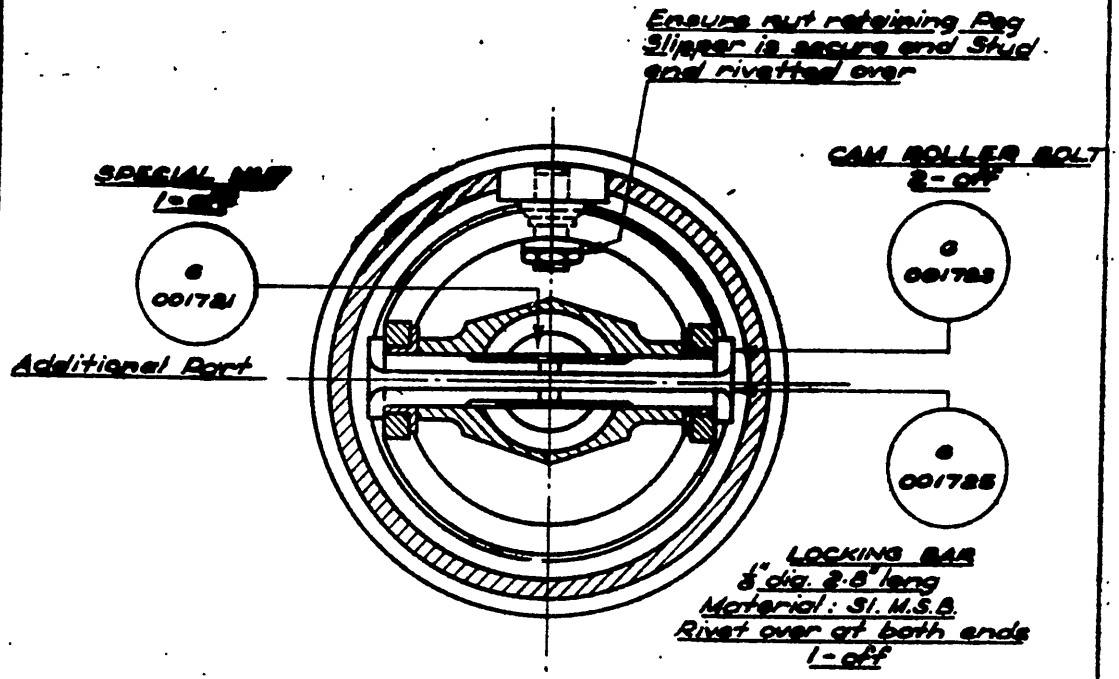

Note:- These Items introduced (Replacing 600310 & 600311)

REFERENCE	ISSUED BY	TITLE
	DIRECTORATE OF TECHNICAL SERVICES R.A.A.F.	INTRODUCTION OF REDESIGNED ROLLER SPIGOT BOLT

LIMITS UNLESS STATED		MATERIAL		COMPONENT OF	NOSE WHEEL ASSY.
DECIMALS	± .010"	SPEC.		MACHINE	VAMPIRE
FRACTIONS	± 1/64"	TREATMENT		ENGINE	
ANGLES	± ½°	FINISH		TECH. ORDER	VAMPIRE MOD. NO 19
SURFACE FINISH AUSTRALIAN STANDARD ENG. DRWG. PRACTICE A.S.681		SCALE		DRAWING NO.	A11306
		DRAWN	APPROVED		DRWG. A SIZE
		TRACED G.G.J.	CHECKED		

G.G.S. RECORDER - CHANGE OF POWER OUTPUT PLUG

Reason for and Description of Modification

1. (a) This modification is necessary to make power outlet plug on aircraft conform with sockets fitted to G.G.S. Recorders by Photographic Order No. 75.

(b) The modification details parts required and work involved to change the aircraft power outlet plug.

Application

2. This modification is applicable to all Vampire Mk.30 aircraft fitted with 4 pole power outlet plugs for G.G.S.

Responsibility for Incorporation

3. Electrical fitters on units concerned will be responsible for incorporation of this modification.

Action in Respect of Spares

4. Not applicable.

Orders Superseded or Cancelled

5. None.

Equivalent Modifications

6. De Havilland ~~Instruction Leaflet 162~~ (AVET) MODIFICATION V.77 AL 16 is the equivalent modification.

Supply

7. The following parts are required to modify one aircraft:-

Item No.	Ident. No.	Part No.	Nomenclature	No. Off per a/c	Stores Class
1	G5C/4074		Plug Type "S" 3 pole	1	A
2	G5C/4075		Shroud, Breeze	1	C
3	G5C/4076		Sleeve Locking	1	C
4		B.0.0.1783	Bracket	1	
5		N.0.0.1869	Packing Piece	1	
6	H28/8302	C.A.C.205-B6	Bolt 4 B.A.	2	C
7	I1/9791		Tinned Copper Wire	2 FT	C

AL

Supply (Cont'd)

Notes: (a) "Items 1 to 7 inclusive will be assembled into modification sets and retained in the De Havilland Modification Centre pending demands from units.".

(b) [redacted]

Disposal of Parts Removed

8. The following parts are redundant:-

Item No.	Ident. No.	Part No.	Nomenclature	No. Off per a/c	Stores Class
8	Y10H/391		Plug 4 pin	1	
9		00B10	Bracket, Gunsight Cable and Recorder Plug	1	
10		00N251	Ferrule	1	
11		00N253	Packing block	1	
12		AGS245/22	Screw	1	
13		AGS245/23	Screw	3	
14		B.P.I.	Nut Simmonds	2	

Note: Redundant parts items 8 to 14 inclusive will be disposed of in accordance with current authorised procedure.

Disposal of Parts in Stock

9. Not applicable.

When Modification is to be Incorporated

10. This modification is to be incorporated as soon as practicable, but not later than next minor inspection after receipt of modification kit.

Method of Incorporation

11. (a) Man-hours involved : Approximately eight (8) man-hours are necessary to incorporate this modification.

(b) Special Tools, Jigs, &c. : None required.

(c) Sequence of Operations :

(i) Remove plug and mounting bracket from L.H. side of G.G.S. and retain attachment nuts and bolts, also lock-nuts holding the Bowden "T" barrels to mounting bracket.

Method of Incorporation (Cont'd)

(ii) Attach new plug mounting bracket, item 4, to gunsight control cables, using lock-nuts retained from operation (i), and then fit new brackets to the gunsight mounting bracket using two (2) off bolts and nuts retained from operation (i).

Note: The Bowden locknuts on the range control cables must not be altered during operations.

(iii) Dismantle and remove existing 4 pin plug from cable by unsweating but do not shorten cable. Retain two (2) off nuts.

(iv) Slide plug shroud, item 2, and packing piece, item 5, over end of cable, ensuring that the shroud end is inside the metal brading of the cable.

(v) Solder plug, item 1, to cable cores as follows:-

Red core to pin 1
Blue core to pin 2
Green core to pin 3

Refer Drawing No. A12324.

(vi) Slide plug shroud and packing piece into position, bind metal braid to barrel of plug shroud with wire, item 7, and lightly solder to prevent unravelling.

(vii) Complete plug assembly with locking sleeve, item 3, and fix to bracket using two (2) off bolts, item 6, and two (2) off nuts retained from operation (iii). Refer Drawing A12324.

(viii) Connect to G.G.S. recorder.

(d) Tests : Function G.G.S. recorder to ensure that correct connections have been made at new plug.

(e) Recording : Record the incorporation of this notification in Airframe Log Book as Vampire Modification No. 20.

Drawings

12. Drawing No. A12324 is attached.

Effect on Weight and Balance

13. The effect of the incorporation of this modification on the weight and balance of the aircraft is negligible.

References	:	**Files R.A.A.F. 150/4/8032 and 150/4/8621**
Attachment	:	**Drawing A.12324**
Date of Issue	:	**8th November, 1954.**

DO NOT SCALE

ISSUE NO.	DATE	ALTERATION	D. I. L.	INITIALS	APPROVED
1					

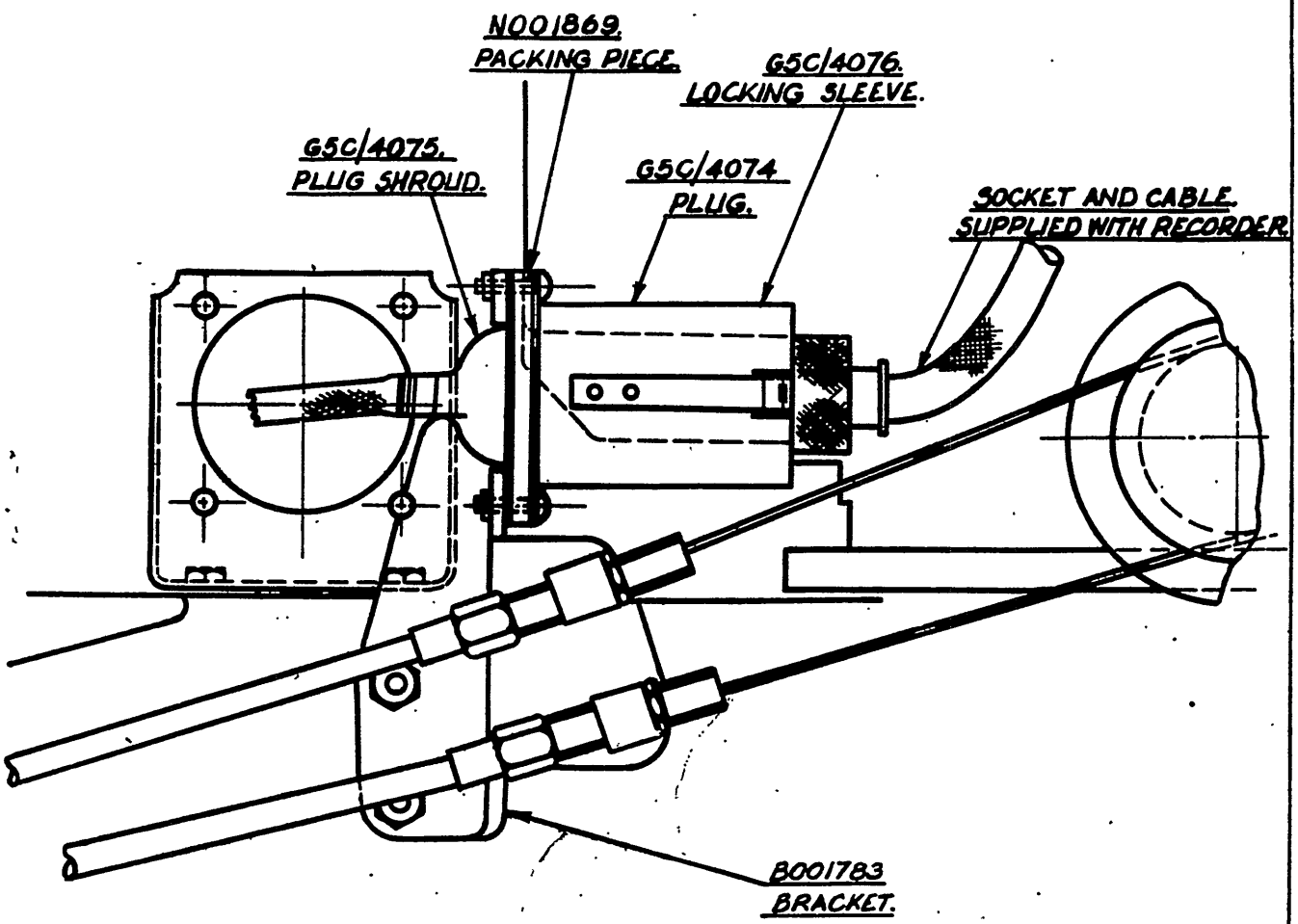

VIEW ON L.H. SIDE OF GYRO GUNSIGHT.
SHOWING NEW OUTLET PLUG INSTALLED.

D.H. DRG. No. 00M162.

REFERENCE	ISSUED BY	TITLE
	DIRECTORATE OF TECHNICAL SERVICES R.A.A.F.	CHANGE OF POWER OUTLET PLUG— G.G.S. RECORDER

LIMITS UNLESS STATED		MATERIAL		COMPONENT OF	
DECIMALS	± .010"	SPEC.		MACHINE	
FRACTIONS	± 1/32"	TREATMENT		ENGINE	
ANGLES	± ½°	FINISH		TECH. ORDER	VAMPIRE MOD. No 20
SURFACE FINISH AUSTRALIAN STANDARD ENG. DRWG. PRACTICE A.S.CZI		SCALE		DRAWING NO.	A-1232 4
		DRAWN	APPROVED		DRWG. A SIZE
		TRACED	CHECKED		

Restricted

Air Force Head-Quarters

Technical Order

VAMPIRE MODIFICATION NO.

Application: See paragraph 3.

Classification: 2

FUEL FILLER CAPS - CHANGE OF MATERIAL

Introduction

1. This modification introduces brass filler caps on the wing fuel tanks to replace the aluminium caps. The latter are found to seize in the filler necks and tend to strip the threads.

General

2. This modification is to be incorporated at the next weekly inspection after receipt of brass filler caps.

3. The modification is applicable to 27 Vampire, Mk. 30 aircraft not incorporating De Havilland (Aust.) Mod. V110.

4. The incorporation of this modification will not involve the use of any special tools.

5. The work will take approximately 1/2 man-hour.

Supply

6. The following part will be required to complete one modification set.

Item No.	Ident.No.	Part No.	Nomenclature	No. off per a/c.	Stores Class.
1	A79/501725	BM1593/14	Filler cap assy. fuel tank	4	C

7. The above item will be supplied to Modification Section, No. 2 Aircraft Depot by De Havillands Pty. Ltd., and issued to units on demand.

8. The following part will be rendered obsolete by the incorporation of this modification and is to be disposed of in accordance with current authorized procedure.

Item No.	Ident.No.	Part No.	Nomenclature	No. off per a/c.	Stores Class.
2		BM1257	Filler cap assy. fuel tank	4	C

Method of Incorporation

9. Unscrew each of the four wing tank fuel filler caps (Item No. 2), and remove from wing, complete with chain and retaining ring.

10. Fit brass filler caps (Item No. 1) complete with new chain and retaining ring.

Drawings

11. Not issued.

Effect on Weight and Balance

12. The effect of the incorporation of this modification on weight and balance is negligible.

References: Files R.A.A.F. 9/84/16 and 150/4/8171.
De Havilland (Aust.) Mod. V110
De Havilland (Aust.) Instruction Leaflet 180.

Date of Issue: 18th January, 1952.

753

Air Force Head-Quarters

VAMPIRE MODIFICATION NO.23

Application: All Vampire Mk. 30 aircraft

Technical Order

Classification: Class 4.

FUEL PRESSURE WARNING LIGHT CIRCUIT - CONNECTION OF RESISTANCE IN POSITIVE LEG.

Introduction

1. This modification calls for the reconnection of cables in the fuel warning light circuit to provide added protection to the fuel pressure switch. This is accomplished by changing the series resistance from the negative side of the pressure switch to the positive side. This ensures that an earth fault between the resistance and pressure cut-out switch will not cause an abnormally high current to flow through the switch.

General

2. This modification is to be carried out on all Mk. 30 Vampire aircraft no later than the next minor servicing. The work is electrical and will take approximately 4 man-hours to complete one aircraft.

Supply

3. The following item is required to modify one aircraft:-

Item No.	Ident. No.	Part No.	Nomenclature	No. off per set	Stores Class.
1	G5E/30155	Spec. G.107	Cable electric AN-18	2 yds.	C

4. The above item is to be drawn from unit stores as required.

Method of Incorporation

5. Disconnect the earth connection from the battery.

6. Remove the front panel of No. 1 junction box in pilot's cockpit.

7. Disconnect and remove cable "SA.27 +" from fuel pressure warning light circuit breaker and contact "E" of socket "C.7".

8. Disconnect and remove cable "SA.43" from resistance unit and pin "Y" of socket "C.1".

9. Disconnect cable "SA.26" from resistance unit and then reconnect this cable to the now vacant pin "Y" of socket "C.1". Do not disturb its other end.

10. Make up and fit new AN-18 cable (Item No. 1) from circuit breaker through grommet to resistance unit on front end of switch-box.

11. Make up and fit new AN-18 cable (Item No. 1) from opposite side of resistance through grommet to contact "E" in socket "C.7".

12. Replace front of switchbox and battery cable.

13. Test for operation of fuel pressure warning light.

Drawings

14. Drawing No. A.11425 attached.

Effect on Weight and Balance

15. The effect of the incorporation of this modification on the weight and balance of the aircraft is negligible.

References: Files R.A.A.F. 9/84/36 and 150/4/8227.

Attachment: Drawing No. A.11425.

Date of Issue: 21st December, 1951.

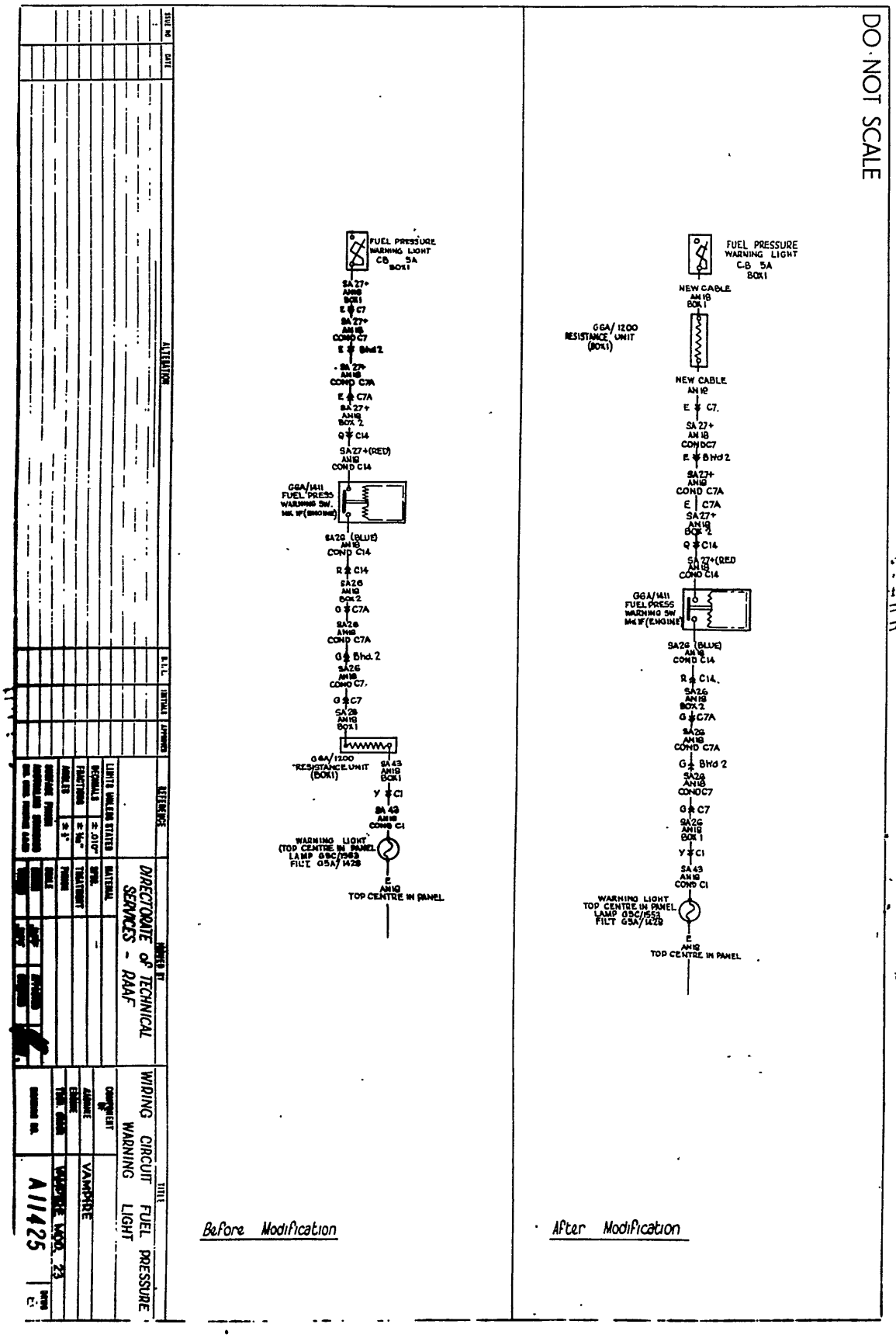
DO NOT SCALE
FUEL PRESSURE WARNING LIGHT C-B 5A BOX 1
NEW CABLE AN 18 BOX 1
GGA/1200 RESISTANCE UNIT (BOX 1)
NEW CABLE AN 18
E C7.
SA 27+ AN 18 COND C7
E Bhd 2
SA 27+ AN 18 COND C7A
E C7A
SA 27+ AN 18 BOX 2
Q C14
SA 27+(RED) AN 18 COND C14
GGA/1411 FUEL PRESS WARNING SW. MK 1F(ENGINE)
SA 28 (BLUE) AN 18 COND C14
R C14.
SA 26 AN 18 BOX 2
G C7A
SA 28 AN 18 COND C7A
G Bhd 2
SA 28 AN 18 COND C7
G C7
SA 26 AN 18 BOX 1
Y C1
SA 43 AN 18 COND C1
WARNING LIGHT TOP CENTRE IN PANEL LAMP 05C/1653 FILT 05A/1428
E AN 18 TOP CENTRE IN PANEL
Before Modification
After Modification
DIRECTORATE OF TECHNICAL SERVICES - RAAF
WIRING CIRCUIT FUEL PRESSURE WARNING LIGHT
VAMPIRE
A11425
VAMPIRE MOD. 23

Air Force Head-Quarters

Technical Order

VAMPIRE MODIFICATION NO.24

Application: See section headings

Classification: Class. 2

20-MM. CANNON - IMPROVED INSTALLATION

Introduction

1. This order authorizes a modification to the 20-mm. cannon installation to facilitate loading and servicing of the guns.

General

2. This modification is to be incorporated not later than the next major inspection.

3. The incorporation of this modification does not involve the use for any special tools other than those required in the normal course for removal and installation of the guns.

4. The modification is divided into six parts which are closely allied, and work should progress in the sequence laid down in this order. The work involved in some of the parts has been performed by the contractors, so in order to avoid confusion, the numbers of the Vampire Mk. 30 aircraft to which the part is applicable will be listed at the beginning of each part, together with the number of man-hours involved.

5. The complete modification will take 41 man-hours.

Supply

6. The following parts are required to complete one modification set:-

Item No.	Ident. No.	Part No.	Nomenclature	No. off per a/c.	Stores Class.
1		A004989 ND	Birch Ply Block	1	C
2		A004991 ND	Birch Ply Block	2	C
3		A004993 ND	Birch Ply Block	1	C
4	H28/7711	A1/30E	Bolts, Steel, H.T., Hex. Hd. 1/4" BSF x 3.5"	4	C
5	H28B/5037	AGS.784/10	Pin, Split, Stainless Steel, 3/32" dia. x 3/4"	6	C
6	H28C/10512	AGS.1145/BB	Pipe, Adaptor	2	C
7	H28B/5045	AGS.784/21	Pin, Split, Stainless Steel, 1/8" dia. x 1½"	2	C
8	H28B/5032	AGS.784/3	Pin, Split, Stainless Steel 1/16" dia. x 1"	3	C

7. Items Nos. 1 to 8 inclusive will be supplied to Modification Section, No. 2 Aircraft Depot, by De Havilland Aircraft Pty. Ltd., and issued to units on demand.

8. Items Nos. 1, 2, 3 and 4 are required for Part "A".
Item No. 5 is required for Parts "A" and "B".
Items Nos. 6 and 7 are required for Part "B".
Item No. 8 is required for Part "F".

9. The following items will be rendered redundant by the incorporation of this modification, but will remain current items, be examined and if serviceable returned to stock:-

Item No.	Ident. No.	Part No.	Nomenclature	No.off per a/c.	Stores Class.
9	H28/7298	A1/17E	Bolts, Steel, H.T., Hex.Hd. 1/4" BSF x 2.15"	2	C
10	H28/7297	A1/16E	Bolts, Steel, H.T., Hex.Hd. 1/4" BSF x 2.05"	2	C
11	A79/501018	Q00331	Pipe, Adaptor	2	C

Method of Incorporation

Part "A" - Repositioning of Magazine Stay Tubes on Cannon Beam

10. Application - Vampire Mk. 30 aircraft -

A79-1, 2, 484, 586, 687, 973, 309, 170, 375, 24, 109, 762, 914, 876, 153, 18, 263, 529, 737, 796, 89, 650, 777, 321, 14, 165, 942, 872, 567, 333, 704.

11. This part should take approximately 24 man-hours.

12. Remove the gun spout fairing panels, port and starboard.

13. Remove the gun bay doors.

14. Remove the 20-mm. guns.

15. Uncouple the magazine stay tubes (4 off) from the eye bolts on the fuselage cannon beam by removing the split-pins and withdrawing the washers and shackle pins. Mark the tubes so as to enable them to be reassembled in their original positions (i.e., port outer, starboard inner, &c.) on completion of modification.

16. Remove eye bolt from existing position by unscrewing nut on forward face of cannon beam.

17. Remove the bolt passing through the Front Mounting Casting (inboard guns) or Front Eccentric Mounting (outboard guns) from the position immediately below the hole previously housing the eye bolt. Retain the nut and washer but discard the bolt.

18. Position and glue the block (Items Nos. 1, 2 and 3) to the aft face of the cannon beam as per Drawing No. 00A176, and drill "F" drill hole through block, spotting through existing hole in bulkhead.

19. Reposition eye bolt in hole passing through block, and using washer and nut previously removed, tighten as before.

20. Position bolt (Item No. 4) in hole previously occupied by eye bolt. Use nut and washer removed in paragraph 17 and tighten as before.

21. Repeat paragraphs 16 to 20 remaining eye bolts.

22. Reassemble all stay tubes using parts previously removed with the exception of new split-pin (Item No. 5).

Part "B" - Replacement of Pitot Tube Adaptors and Rework of Brake Line Pipes at Pilot's Bulkhead

23. Application - Vampire Mk. 30 aircraft -

Pitot Pipes - A79-1, 2, 484, 586, 687, 973, 309, 170, 375, 24, 109, 762.

Brake Pipes - A79-1, 2, 484, 586.

24. Work involved is approximately :-

Pitot Pipes - 6½ man-hours.
Brake Pipes - 1/2 man-hour.

25. Remove pilot's seat.

26. Locate pipe adaptor plate on the forward face of pilot's bulkhead at cockpit floor level.

27. Cut locking wire on coupling nuts securing forward and aft run of pitot pipes to adaptors on bulkhead and unscrew these nuts. Bend pipes away sufficiently to allow for later removal of adaptors.

28. Cut the wire locking the two pitot line adaptors to the remainder of the forward face of the bulkhead, and on jamming a screw-driver or suitable piece of flat steel between the flat of the lock-nut on the aft face of the plate and the side of the recess, cut in the bulkhead so as to prevent this nut from turning, unscrew the adaptor from the plate. Retain gaskets only.

Note: If available, a tube spanner may be used to hold these nuts during removal, in place of a screw-driver, but the wire locking on the two lock-nuts is not to be disturbed as to relock these would mean the removal of the whole adaptor plate.

29. Fit the new adaptors (Item No. 6) to plate, together with gaskets previously removed, being careful to engage lock-nut on opposite face of plate correctly. Jam this nut as before and nip assembly up tight by screwing adaptor on forward face of bulkhead. Wire-lock adaptors as before.

30. It is recommended that so as to provide some degree of support for the nuts, each adaptor be treated singly and replacement fitted before the removal of the other.

31. Re-connect the pitot pipes forward and aft of the bulkhead by screwing the coupling nuts onto adaptors. Wire-lock these nuts as before. Check 1.5 inch dimension from face of bulkhead as shown on Drawing No. 00M176.

32. Replace pilot's seat.

33. Rework the two brake line pipes on the aft face of the bulkhead adjacent to the pitot pipes as shown on Drawing No. 00M176.

Part "C" - Rework of Operating Lever by-pass Valve - Dive Brake Hydraulic Circuit

34. Application - Vampire Mk. 30 aircraft -

A79-1, 2, 484, 586, 687, 973, 309, 170, 375, 24, 109, 762, 914, 876, 153.

35. Work involved is approximately one man-hour.

36. Locate and remove the operating lever from the by-pass valve mounted on the aft face of pilot's bulkhead (immediately above the port side gun cut-outs).

37. Rework lever as per Drawing No. 00M176.

38. Replace lever using existing bolts, nuts, &c., as per Drawing, bending lever slightly to suit as shown.

Part "D" - Rework of Cannon Heater Pipes at Pilot's Bulkhead

39. Application - Vampire Mk. 30 aircraft -

Rework of port outlet - A79-1, 2, 484, 586.

Rework of stbd. side - A79-1, 2, 484, 586, 687, 973, 309, 170, 375, 24, 109, 762, 914, 876, 153.

40. Work involved is approximately :-

Port outlet - 1/2 man-hour.

Stbd. side - 3-1/2 man-hours.

41. Locate the cannon heating pipe running across the bottom aft face of the pilot's bulkhead.

42. Unclip the two sections of heater pipe below the heat outlet for the starboard guns.

43. Withdraw the pipe running across aft face of the pilot's bulkhead from the aircraft by removing the bolts, nuts and washers securing it through the two "P" clips.

44. Rework that section of the heater pipe containing the outlet to the starboard guns as shown on Drawing No. OOM176.

45. Reassemble the heater pipe to the aircraft using the original clips, bolts, nuts &c., as were previously removed in paragraphs 42 and 43.

46. Bend the port outlet of the pipe so as to take up its original position between the two cut-outs in the bottom of the pilot's bulkhead for the port inner and outer cannons.

47. Cut the port outlet of pipe back, as shown on Drawing No. OOM176.

Part "E" - Repositioning of Nose Wheel Hydraulic Pipe Clamp Block

48. Application - Vampire Mk. 30 aircraft -

A79-1, 2, 484, 586, 687, 973, 309, 170, 375, 24, 109, 762, 914, 876, 153.

49. Work involved will be approximately four man-hours.

50. Locate the clamp block assembly for the nose wheel hydraulic pipes mounted on the underside of the front floor panel (nose wheel housing).

51. Separate the clamp block halves from the angle bracket by removing the two 2 BA bolts together with nuts and washers.

52. Remove the two 4 B.A. bolts, nuts and washers securing the angle bracket to the underside of the floor. Remove this bracket and retain all parts.

53. Drill two No. 26 drill holes through floor, as shown on Drawing No. OOM176.

54. Position clamp block half on the outboard side of pipes (upper face of the floor panel) by passing the hand up through the opening in the floor immediately behind the nose wheel.

55. Assemble remaining half of clamp together with bonding gauze loosely to bracket by slipping bolts through bracket and block and position on the upper face of floor on the inboard side of pipes in the same manner as before.

56. Slip a screw-driver up through the oval cut-out for pipes in the pipes in the floor, and using it as a lever, jam the outboard clamp block half, hard against the pipes.

57. Holding the screw-driver in the right hand, pass the left hand up through the nose wheel opening and carefully manoeuvre the bolt through the clamp block half, jammed against the pipes. Repeat for bolt at other end of block.

58. Slip washer over end of bolt protruding through clamp block.

59. It is recommended that a 2nd operator prevent the bolt head from turning by means of a tube spanner passed up through the nose wheel opening while the 1st operator screws the nuts onto the bolts as far as possible with his fingers.

60. The head of a thin 2 B.A. spanner passed up through the oval cut-out for pipes will be able to engage the nut if the whole assembly is forced inboard by the use of the screw-driver lever. Tighten the nut on the bolt either by means of this spanner or by the tube spanner held by the 2nd operator supporting the head of the bolt. Repeat this operation for the bolt at the other end of block.

61. Allow the pipes with the clamps attached to return to their normal position in the approximate centre of the cut-out by withdrawing the screw-driver lever and position the bracket so that the holes coincide with those drilled through the floor in paragraph 53.

62. Slip the two 4 B.A. bolts removed in paragraph 52 down through the bracket and floor by means of the hand passed up through the nose wheel opening, and preventing the bolt heads from turning by the use of a suitable spanner, clamp bracket to floor using existing washers and nuts.

63. Rework run of nose wheel hydraulic pipes under floor, as shown on Drawing No. OOM176.

Part "F" - Rework of Front Hinge Bracket - Nose Wheel Door

64. Application - Vampire Mk. 30 aircraft -

A79-1, 2, 484, 586, 687, 973, 309, 170, 375, 24, 109, 762, 914, 876, 153.

65. Work involved is approximately one man-hour.

66. Disconnect the lower radius rod from the nose wheel door by withdrawing the split-pin and removing the shackle pin and washers.

67. Remove the nose wheel door from the aircraft by withdrawing the split-pin and removing the slotted nut, bolt and washer, from the front and rear door hinge.

68. Rework the front hinge bracket as per Drawing No. OOM176. Treat the reworked portion of the hinge with a solution of water containing 10% Selenious Acid (by weight). The solution is to be applied using a soft rag or cotton wool until a brown or black colour is obtained, after which the treated surface is to be washed thoroughly in clean water and dried immediately. Do not allow the solution to come into contact with the skin.

69. Replace the nose wheel door using the original nuts, bolts and washers as were removed from the front and rear hinges in paragraph 67 together with new split pins (Item No. 8).

70. Reconnect the lower radius rod to the door using the shackle pin and washers removed previously, together with new split-pin (Item No. 8). Ensure that eye bolt is packed with washers in same manner as before.

71. On completion of the full modification -

(a) Replace the 20-mm. cannons.

(b) Replace the gun bay doors.

(c) Refit the gun spout fairing panels to the nose of the aircraft.

Drawings

72. Drawing No. OOM176 issued on demand from Air Force Head-Quarters.

Effect on Weight and Balance

73. The effect of the incorporation of this modification on the weight and balance of the aircraft is negligible.

References: Files R.A.A.F. 9/41/326, 9/84/16 and 150/4/8229.
De Havilland (Aust.) Modification No. V.75.
A.M. Mod. No. V.688.

Date of Issue: 2nd November, 1951.

Air Force Head-Quarters

Technical Order

VAMPIRE MODIFICATION NO. 25

Application: See Paragraph 2B

Classification: Class 2.

FUEL TANKS - CORNERS AND FITTING ATTACHMENT POINTS REINFORCEMENT

Introduction

1. This modification authorises the reinforcement of fuel tanks at corners and fitting attachment points to prevent leaking.

General

2. (a) The modification is equivalent to the tank Manufacturers, Marston Excelsior, modification Nos. T7 and T18.

(b) The modification will be applicable to Vampire wing fuel tanks not incorporating the above modifications.

Supply

3. Items required for this modification will be supplied by the Dunlop Rubber Company.

Incorporation

4. The modification is to be incorporated as required by the Dunlop Rubber Company, when the tanks are being reconditioned and pressure tested by that firm.

Drawing

5. Not applicable.

Effect on Weight and Balance

6. The effect of the incorporation of this modification on the weight and balance of the aircraft is negligible.

References : Files R.A.A.F. 9/84/74, 9/84/459 and 150/4/7985 and 150/4/8254.

Date of Issue : 14th April, 1954.

Air Force Head-Quarters

Technical Order

VAMPIRE MODIFICATION NO. 26

Application: Vampire Mk. 30 (see para. 2).

Classification: Class. 2

FUEL TANK VENT BRACKET - LENGTHENING

Introduction

1. This modification authorizes the replacement of the existing fuel tank vent bracket on the fireproof bulkhead with a longer type so as to prevent fuel draining from the vent pipe and collecting in the lower engine cowling.

General

2. This modification is applicable to the following 27 Vampire Mk. 30 aircraft not incorporating De Havillands (Aust.) Modification No. V80.

A79-1, 2, 484, 586, 687, 973, 309, 170, 375, 24, 109, 83, 762, 914, 876, 153, 18, 263, 529, 737, 796, 89, 650, 777, 321, 14, 165.

3. This modification is to be incorporated as follows:-

(a) Aircraft In Use : Not later than the next minor inspection after receipt of modification sets.

(b) Aircraft undergoing repair or inspection : During such repair or inspection.

4. No special tools are required.

5. The work will take approximately 12 man-hours.

Supply

6. The following parts are required for one modification set:-

Item	Ident.No.	Part No.	Nomenclature	No. off per a/c.	Stores Class.
1	A79/ 501733	00A/73A	Bracket, Assembly Vent	1	
2	N28/7013	6A1/1B	Bolt, (Hex. Hd.) 4 BA X .45" long M.S.	2	
3	H28/8449	AS1882/ 1B	Bolt, (Csk.Hd.) 4 BA X .45" long M.S.	4	
4	H28/10287	AGS2001/ E/1	Stiffnut, 4 BA	6	

7. The above items will be supplied to Modification Section No. 2 Aircraft Depot by De Havilland Pty. Ltd., and issued to units on demand.

8. The following items are to be disposed of in accordance with current authorized procedure, Item No. 5 having been declared obsolete and Items 6 and 7 having been declared redundant:-

Item	Ident.No.	Part No.	Nomenclature	No. off per A/C.	Stores Class.
5	-	A00312SA	Bracket Assy. - Vent	1	C
6	H128F/ 61505	AS2227/ 405	Rivets, R.H. $\frac{1}{8}$" dia. X 5/16" long	2	C
7	H128F/ 30238	AS2229/ 406	Rivets, Csk. Head $\frac{1}{8}$" dia. $\frac{3}{8}$" long	6	C

Method of Incorporation

9. Remove lower engine cowling as per Section 5, para. 144, of Australian Air Publication No. 828.

10. Remove Gun Bay Doors.

11. Locate and remove the eight $\frac{1}{8}$" dia. rivets securing the vent bracket to the lower cowling support channel on the aft piece of the fireproof bulkhead on the port side. Care is to be taken in the removal of these rivets to prevent elongation of holes both in support channel and red fibre packer.

12. Slacken off the clips on the hose joining the bracket to the vent pipe and after moving the hose up the vent a sufficient distance, remove the bracket and fibre packer.

13. Enlarge hole in cowling support channel, bottom cowling and fibre packer just sufficiently to allow fitment of new vent bracket Item No. 1.

14. Treat the surface from which bracket was removed with one coat of seaming compound D.T.D. 369A R.A.A.F. Ident. No. K4/10026.

15. Fit new vent bracket to bulkhead, allowing oval section of pipe to protrude through hole previously cut in cowling support channel.

16. Enlarge rivet holes in support channel by spotting through the six existing drill holes in bracket with No. 27 drill. It will be noted that two are now redundant.

17. Enlarge four holes in fibre packer with No. 27 drill to mate with existing four No. 27 drill holes in bracket and countersink to suit bolts (Item 3).

18. Slip fibre packing over protruding section of pipe and secure both bracket and packer to cowling support channel with four Csk. head bolts (Item 3) together with nuts (Item 4).

19. Secure forward face of bracket to channel and bulkhead using two bolts (Item 2) with heads on forward face of bulkhead.

Note: It may be necessary to trim rubber seal returning strip locally to provide seating for bolt head.

20. Replace hose connection so as to effectively join pipe to bracket and tighten clips.

21. Replace bottom cowl and gun bay doors.

Drawings

22. No drawings will be required.

Effect on Weight and Balance

23. The effect of the incorporation of this modification on the weight and balance of the aircraft is negligible.

References: Files R.A.A.F. 9/84/74, 150/4/8268
De Havilland (Aust.) Modification V.80
A.M. Modification V.A.M. 854 and V.A.M. 899,
De Havilland (Aust.) Instruction Leaflet 171.

Date of Issue: 23rd May, 1952.

Air Force Head-quarters

Technical Order

VAMPIRE MODIFICATION NO. 27

Application: See paragraph 2.

Classification: Class 2.

FUEL TANK VENT - IMPROVED INSTALLATION.

Introduction

1. This modification authorizes the introduction of a new fuel tank vent with a higher outlet point. This will minimize the possibility of fuel draining from the fuel tanks when the port wing is tilted upwards.

General

2. This modification is applicable to the following Vampire Mk. 30 aircraft not incorporating De Havilland (Aust.) Modification No. V. 86.

A79-1, 2, 484, 586, 687, 973, 309, 170, 375, 24, 109, 762, 914, 876, 153, 18, 262, 529, 737, 796, 89, 650, 777, 321, 14, 165, 942, 872, 567, 333, 704.

3. This modification is to be incorporated as follows:-

(a) Aircraft in use : Not later than next minor inspection after receipt of modification sets.

(b) Aircraft undergoing repair or inspection : During such repair or inspection.

4. No special tools are required.

5. The work will take approximately seven man-hours.

Supply

6. The following parts are required for one modification set:-

Item No.	Ident. No.	Part No.	Nomenclature	No. off per a/c.	Stores Class.
1	A79/501789	00P109A ND	Pipe Assy.	1	C
2	N/1	P002675 ND (Issue A1)	Pipe -Vent	1	C
3	A79/501788	00P103A ND	Pipe Assy.	1	C
4	H28/8182	AGS605/0	Clips Hose	2	C
5	N/1	DHS159/G.20	Joint Hose	1	C

7. The above items will be supplied to Modification Section No. 2 Aircraft Depot by De Havillands Pty. Ltd. and issued to units on demand.

8. Of the following parts, Item No. 6 is declared obsolete and is to be disposed of in accordance with current authorized procedure. Item No. 7 will be redundant for this modification, but may be reworked by removing the welded Y piece from the 1" dia. pipe and welding an aluminium patch over the redundant hole. It will then conform to the new Part No. P002675 ND Issue A1.

Item No.	Ident.No.	Part No.	Nomenclature	No. off per a/c.	Stores Class.
6	N/1	P002674 AND	Vent Pipe Assy.	1	C
7	N/1	P00267 IND	Vent Pipe	1	C

Method of Incorporation

9. Remove the top engine cowl as per Section 5, paragraph 144, Australian Air Publication 828.

10. On the aft side of bulkhead locate the main vent pipe running from the banjo connection at top centre line down the port side to the bottom of the bulkhead.

11. Slacken off the clips on the hose joining the forked arm of the main vent pipe to the wing vents. Slacken hose joints at each of the other two ends of this same pipe and remove and discard the pipe item 6.

12. Remove the top portion of the pipe remaining i.e., the piece continuing up to banjo (Item No. 7).

13. Fit new pipe (Item No. 1) in position from which (Item No. 7) was removed in operation 12.

14. Complete main vent pipe by fitting new pipe (Item No. 2) replacing that removed in operation 11.

15. Assembly new pipe (Item No. 3) from stub pipe on pipe (Item No. 1) to the two wing tank vents, using two existing hose joints and new joint and clips (Items Nos. 4 and 5).

16. Align completed pipe assembly to agree with natural bend of pipe. Tighten all loose joints and replace bonding clips and flexes. Ensure that new pipes are not touching any adjacent parts.

17. Replace top cowl.

Drawings

18. No drawings are required.

Effect on Weight and Balance

19. The effect of the incorporation of this modification on the weight and balance of the aircraft is negligible.

References: Files R.A.A.F. 9/84/74 and 150/4/8269.

De Havilland Pty. Ltd., Aust. Mod. V86
A.M. Mod. VAM 854
De Havilland (Aust) Instruction Leaflet 173.

Date of Issue: 9th May, 1952.

Air Force Head-Quarters

Technical Order

VAMPIRE MODIFICATION NO.

Application: See paragraph 2.

Classification: 2.

FUEL TRANSFER SYSTEM BANJO PILLAR - SHORTENING

Introduction

1. This modification authorizes the introduction of a shorter banjo pillar in the external wing tank fuel transfer system, so as to produce additional clearance between banjo and engine wheel case.

General

2. This modification is applicable to 36 Vampire Mark 30 aircraft, not incorporating De Havilland (Aust.) Modification V 143 and is to be incorporated as follows:-

(a) Aircraft in use : As early as possible but not later than the next minor inspection.

(b) Aircraft undergoing repair or inspection : During such repair or inspection.

(c) No special tools are required.

(d) The work will take approximately 13 man-hours.

Supply

3. The following parts will be required to complete one modification set.

Item No.	Ident.No.	Part No.	Nomenclature	No. off per A/C.	Stores Class.
1	A79/ 501960	00P125	Adaptor, fuel pipe	1	"C"
2	H28C/9439	AGS11384	Washer, Joint	3	"C"

4. The above items will be supplied to the Modification Section, No.2 Aircraft Depot, by the De Havilland Aircraft Pty. Ltd., and issued to Units on demand.

Item No.	Ident.No.	Part No.	Nomenclature	No. off per A/C.	Stores Class.
3	A79/ 501371	P002654	Adaptor, fuel pipe	1	"C"
4	H28C/9439	AGS11384	Washer, Joint	4	"C"

Salvage

5. Item 3 will be rendered obsolete by the incorporation of this modification. Item 4 is to be discarded.

Method of Incorporation

6. Remove fuel from the main fuel tank until the fuel is below the level of the external wing tank fuel transfer float valve i.e., main tank fuel guage to read approximately 50 gallons.

NOTE: If a hose is inserted in fuel tank, care is to be taken that the fuel contents guage float arm is not damaged.

7. Remove top engine cowl.

8. Locate external wing tank fuel transfer 2-way banjo connection on the aft side of the fireproof bulkhead just to port of centre line of aircraft and below auxiliary gear box.

9. Detach fuel pipes from banjo at the flexible hose joints.

10. Remove wire locking and unscrew banjo cap - remove banjo and all jointing washers. Discard jointing washers. (Items 4 - 3 off)

11. Remove two 4BA bolts securing seal retaining plate to fire-proof bulkhead and remove the split seal.

12. Unscrew banjo pillar from the tank and withdraw through the fire proof bulkhead. Discard item 3 and item 4 - 1 off but retain the split seal.

13. Coat thread of new banjo pillar (item 1) with thread lubricant K4/329 and assemble together with seal retaining plate and jointing washer (Item 2 - 1 off) to tank using gasket cement K4/10027.

14. Fit seal in retaining plate and reassemble to fireproof bulkhead using bolts retained in operation 11.

15. Reassemble banjo and banjo cap together with washers to banjo pillar, coating threads with K4/329 and washers with K4/10027.

16. Wire lock banjo cap.

17. Refit flexible hose connections to banjo and tighten clips.

18. Test system for leaks in accordance with current authorized procedure.

19. Replace top engine cowl.

Drawings

20. No drawings will be required.

Effect on Weight and Balance

21. The effect of this modification on the weight and balance of the aircraft is negligible.

References: File R.A.A.F. 9/84/74
De Havilland (Aust.) Mod. No. V143.
De Havilland (Aust.) Instruction Leaflet 161.

Date of Issue: 6th June, 1952.

Restricted

Air Force Head-Quarters

Technical Order

VAMPIRE MODIFICATION NO. 30

Application: See para. 2

Classification: Class 2

UNDERCARRIAGE RADIUS ROD STOP BOLT - WIRE LOCKING

Introduction

1. This modification authorises the introduction of wire locking on the undercarriage radius rod stop bolt to prevent the bolt from working loose.

General

2. (a) This modification is applicable to Vampire Mk.30 aircraft not incorporating De-Havilland (Aust.) modification V.120.

(b) This modification is to be incorporated as follows:-

(i) Aircraft in use : Not later than next minor inspection after receipt of modification sets.

(ii) Aircraft undergoing repair or inspection : During such repair or inspection.

(c) No special tools are required.

(d) Approximately eleven (11) man-hours will be required.

Supply

3. The following parts will be required to complete one modification set:-

Item No.	Ident. No.	Part No.	Nomenclature	No. off per A/c	Stores Class
1	H28B/5032	AGS784/3	Pin, split 1/16" dia. x 1" long	3	C
2	I1/103	Commercial	Wire locking, 18 SWG	As Req	C

Note: Items 1 and 2 will be drawn from unit stores.

Salvage

4. There will be no parts rendered redundant by the incorporation of this modification.

Method of Incorporation

5. The following is the sequence of operations for the embodiment of this modification:-

(a) Trestle the aircraft in accordance with figure 9 of Australian Air Publication 828 to raise both nose and main wheels clear of the ground.

(b) Refer to figure 57 of A.A.P 828 and remove lock link pin (Item Y) to detach radius rod from compression leg. Retain all parts.

(c) Locate the radius rod stop bolt (Item C, figure 23 A.A.P. 828), but do not alter the setting.

(d) Operate the lock plates (Item T, figure 23 A.A.P. 828) manually, so that the roller moves along the slot on the lock link, (Item B, figure 23) to its extreme position. This allows the lock link to move freely, independent of the remainder of the radius rod assembly.

(e) Drill the bottom flange of the upper link (Item D, figure 23) and the rail of the bolt as shown on drawing.

Note: This is an awkward operation and it may be found that by selecting undercarriage "up" and manually pumping, that the radius rod will be moved to a more suitable position.

(f) Wire lock bolt in accordance with drawing No. A11687 using wire locking (Item 2).

(g) Return radius rod to "down" position and refit pin nut and washer removed as in paragraph 5(b) and pin with item 1.

(h) Carry out modification in a similar manner on the nosewheel.

(i) Check the operation of the undercarriage.

(j) Remove the trestles.

(k) Record the modification in the airframe log book.

Drawing

6. Drawing A11687 is attached.

Effect on Weight and Balance

7. The effect of the incorporation of this modification on the weight and balance of the aircraft is negligible.

References : Files R.A.A.F. 9/84/91 and 150/4/8360
D.H. Aust. Mod. V.120
A.M. Mod. VAM 960
L.M.C. Meeting No.22

Attachment : Drawing A.11687

Date of Issue : 5th November, 1953.

DO NOT SCALE

ISSUE NO.	DATE	ALTERATION	INITIALS	APPROVED

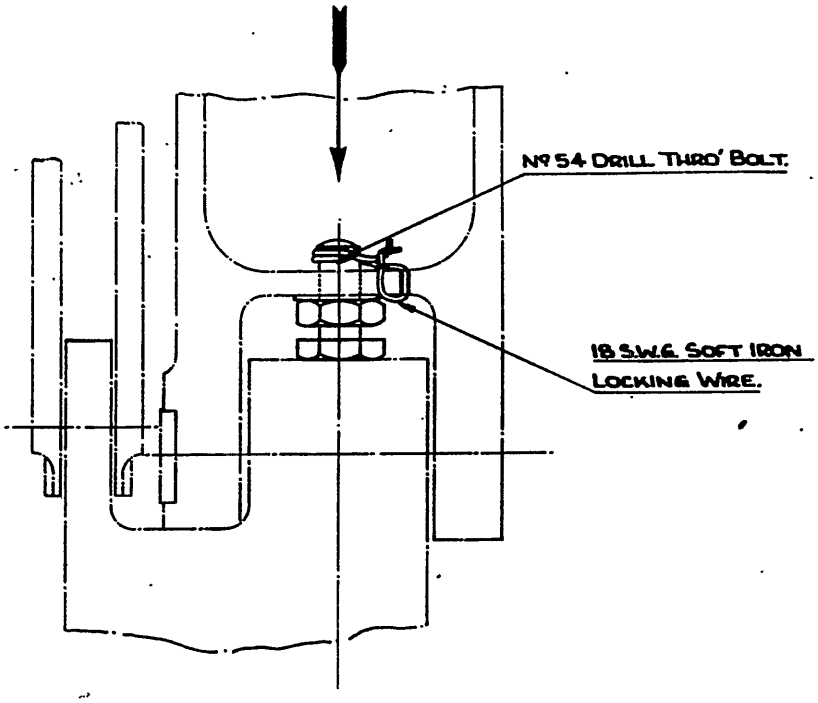

VIEW LOOKING INBOARD ON PORT RADIUS ROD.

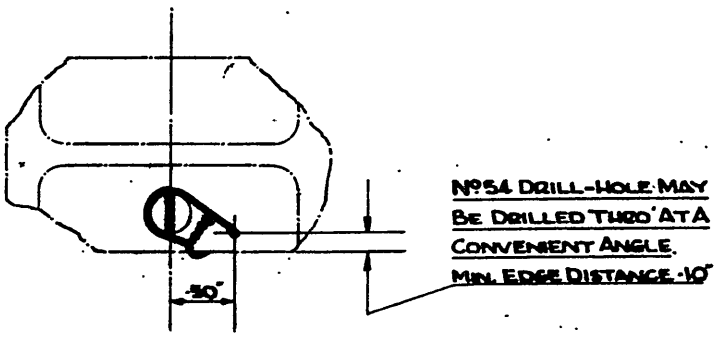

SCRAP VIEW ON ARROW.

DE HAVILLAND DRAWING OOM189.

REFERENCE	ISSUED BY	TITLE
	DIRECTORATE OF TECHNICAL SERVICES R.A.A.F	RADIUS ROD STOP BOLT WIRELOCKING.

LIMITS UNLESS STATED		MATERIAL			COMPONENT OF	UNDERCARRIAGE
DECIMALS	± .010"	SPEC.			MACHINE	VAMPIRE MR.30
FRACTIONS	± 1/64"	TREATMENT			ENGINE	
ANGLES	± ½°	FINISH			TECH. ORDER	VAMPIRE MOD No 30
SURFACE FINISH AUSTRALIAN STANDARD ENG. DRWG. PRACTICE A.S.C.21		SCALE			DRAWING NO.	A11687
		DRAWN		APPROVED		DRWG. A SIZE
		TRACED		CHECKED		

TS 8 L

Restricted

Air Force Head-Quarters | VAMPIRE MODIFICATION NO. 31

Technical Order | Application: See para 2.

Classification: Class 2.

CABLE FAIRLEAD - REPOSITIONING

Introduction

1. This order authorises the repositioning of the aileron cable fairlead in the tank bay so as to correct the misalignment of the cable rub.

General

2. This modification is applicable to 24 Vampire Mk.30 aircraft not incorporating De Havilland (Aust) Mod. V.118.

3. The modification is to be incorporated as follows:-

(i)	Aircraft in Use	Not later than the next major inspection.
(ii)	Aircraft undergoing repair or inspection	When such repair necessitates or facilitates the removal of the mainplanes.

4. No special tools are required.

5. Providing mainplanes and main fuel tank are removed the man-hours required to carry out the work will be approximately 6 man-hours, excluding glue drying time.

Supply

6. The following parts are required to complete one modification set:-

Item No.	Ident.No.	Part No.	Nomenclature	No. off per a/c.	Stores Class
1	I1/2559	00Z33ND	Plate washer, 4.1" long x 0.44" wide x 18 SWG Alclad, D.T.D.390 or 610.	2	C
2	[illegible]	D.T.D.36A	Plug, 3/16" dia. x 3" long Spruce D.T.D.36B?	2	C
3	K4/18C		NOMENCLATURE GLUE-CASE INCEMENT	As reqd.	C

AL7

Note: Items 1, 2 and 3 are to be drawn from unit stores.

Salvage

7. There are no items rendered redundant by the incorporation of this modification.

Method of Incorporation
(This assumes that wings and fuel tank have been removed)

8. On the port side of the fuselage in the tank bay locate the flying controls pulley bracket.

9. Remove the nuts securing the aft side of the bracket to the fuselage. Remove the centre bolt (i.e., the bolt attaching the fairlead).

Note: This is a captive bolt and is secured to the outside of the fuselage shell with two wood screws. Retain all items.

"10. Secure plug (item No. 2) in hole using cold water glue (item 3).
(issued with A.L.7).

11. Make up washer plate in accordance with drawing No.A.11685 using material (Item 1).

12. Dress off spruce plug.

13. Refit the top and bottom bolts in bracket. Fit washer plate and tighten up using washer and nuts retained at Operation 9.

14. Using No.11 drill (0.191"), drill right through fuselage from new hole in washer plate.

15. Repair external finish to conform to original scheme.

16. Refit bolt in the centre position and assemble fairlead washers and nut.

17. Carry out modification in a similar manner on the starboard side.

18. Check the alignment of aileron cables the complete run being checked for freedom of movement, etc., when the wings are reassembled to fuselage.

19. Record modification in log book.

Drawings

20. Drawing No.A.11685 is attached.

Effect on Weight and Balance

21. The effect of the incorporation of this modification on the weight and balance of the aircraft is negligible.

Reference	:	File R.A.A.F. 150/4/8359 D.H. Aust. Mod. V.118
Attachment	:	Drawing N. A.11685
Date of Issue	:	September, 1952.

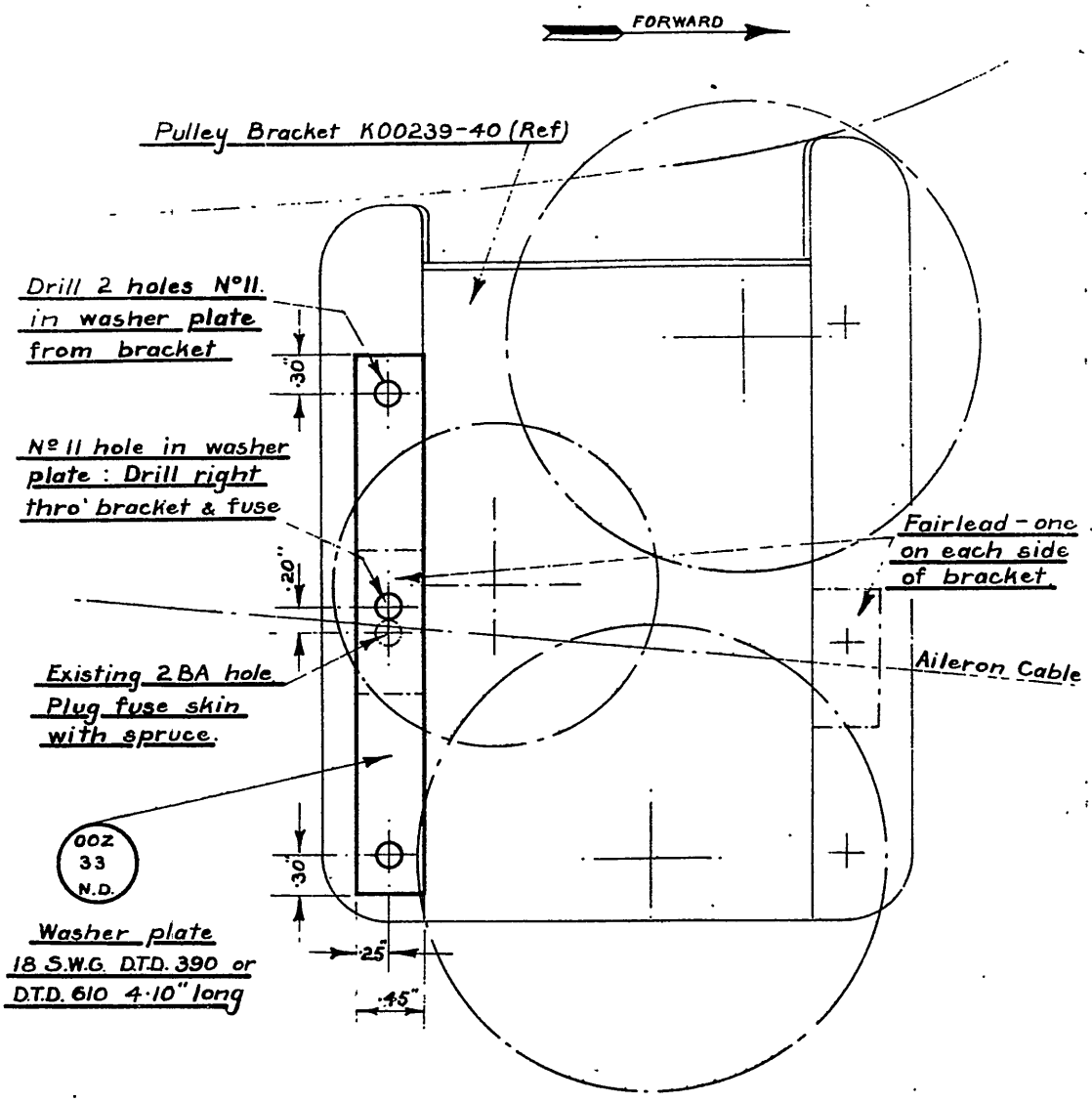

View On Port Side Of Tank Bay

De Havilland drawing 00M186

DIRECTORATE OF TECHNICAL SERVICES

R A A.F

TO REPOSITION AILERON CABLE FAIRLEAD ON INTERMEDIATE PULLEY BRACKET

VAMPIRE MOD. N° 31

A-11685

Restricted

Air Force Head-Quarters

Technical Order

VAMPIRE MODIFICATION NO. 32

Application: See para. 2

Classification: Class 2

ELEVATOR TAB - ADDITIONAL RIVETS

Introduction

1. This modification authorises the fitting of additional rivets for the attachment of the balance strip to the trailing edge of the elevator trim tab. A case has occurred of this strip lifting on the under surface due to the action of water coming into contact with it at high velocity on take-off.

General

2. This modification is applicable to 15 Vampire Mk.30 aircraft not incorporating the approved equivalent modification De Havillands (Aust) Modification V.109.

3. This modification is to be incorporated as follows:-

Aircraft in use	:	Not later than next minor inspection.
Aircraft undergoing repair or inspection	:	During such repair or inspection

4. No special tools are required.

5. This modification will take approximately 5 man hours.

6. The following parts is required to complete one modification set:-

Item No.	Ident.No.	Part No.	Nomenclature	No. off per A/c.	Stores Class
1	H28F/6047	AS2230/306	Rivets 120° csk 3/32" X 3/8" long	20 approx	C

7. Item 1 will be drawn from unit stores.

Salvage

8. There will be no parts rendered redundant by the incorporation of this modification.

Method of Incorporation

9. Mark out, drill with No.40 drill and countersink for additional rivets along elevator tab balance strip in accordance with Drawing No. A 11684

10. Fit rivets (item 1) and flush up.

11. Repair finish to conform to original paint scheme.

12. Check the operation of the trim tab.

13. Record the modification in the airframe log book.

Drawings

14. Drawing N°A11684 is attached.

Effect on Weight and Balance

15. The effect of the incorporation of this modification on the weight and balance of the aircraft is negligible.

References : Files R.A.A.F. 9/84/275 and 150/4/8364

No.78 (F) Wing Defect Report No.2/51 D.H. Aust Mod. V.109

Attachment : Drawing A.11684

Date of Issue : 20th January, 1953.

DO NOT SCALE

ISSUE NO	DATE	ALTERATION	D. L.	INITIALS	APPROVED
1					

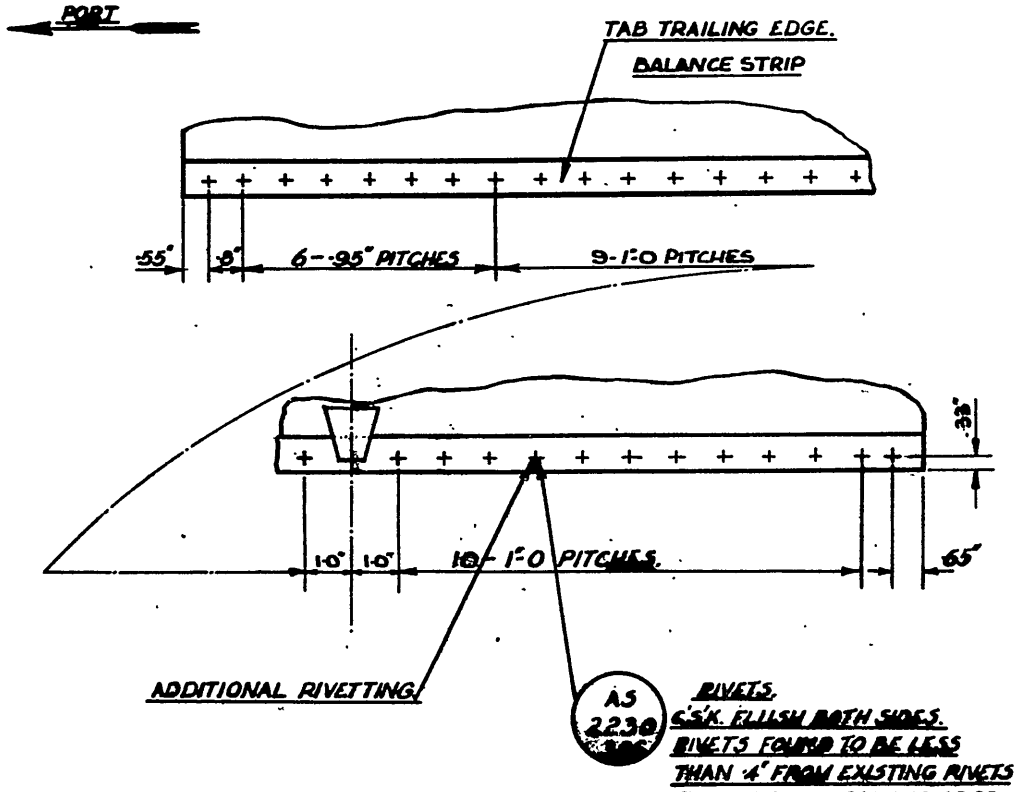

RIVETTING OF TRAILING EDGE STRIP TO ELEVATOR TRIM TAB.

DE HAVILLAND DRAWING OOM184.

REFERENCE	ISSUED BY	TITLE
	Directorate of Technical Services. R.A.A.F.	TO PROVIDE ADDITIONAL RIVETS FOR ATTACH'T OF BALANCE STRIP TO T.E. ELEVATOR T/TAB.

LIMITS UNLESS STATED		MATERIAL	
DECIMALS	± .010"	SPEC.	
FRACTIONS	± 1/32"	TREATMENT	
ANGLES	± ½°	FINISH	
SURFACE FINISH AUSTRALIAN STANDARD ENG. DRWG. PRACTICE A.S.E.D.		SCALE	
		DRAWN	APPROVED
		TRACED	CHECKED

COMPONENT OF	Elevator	
MACHINE	Vampire Mk.30	
ENGINE		
TECH. ORDER	Vampire No.32	
DRAWING NO.	A11684	DRWG. A SIZE

Restricted

Air Force Head-Quarters

Technical Order

VAMPIRE MODIFICATION : NO. 33

Application : Vampire Mk.30
See para. 2a

Classification : Class 2

MANUFACTURER'S LABEL - INTRODUCTION OF

Introduction

1. This modification details parts required and work involved in introducing a Manufacturer's Label.

General

2. (a) This Modification is applicable to Vampire aircraft Mk.30 not incorporating the approved equivalent modification De Havilland (Aust.) Modification No. V.97.

(b) This modification is to be incorporated as follows:-

(i) Aircraft in use : Not later than the next major inspection after receipt of modification sets.

(ii) Aircraft undergoing repair or inspection : During such repair or inspection.

(c) No special tools will be required.

(d) Man-hours : Approximately one (1) man-hour plus glue time

Supply

3. The following parts will be required to complete one modification

Item No.	Ident. No.	Part No.	Nomenclature	No. off per a/c	Stores Class.
1		00A103	Name Plate	1	
2			Rawl-Plug No.6 x $\frac{1}{2}$"	4	
3	H28C/2287	AGS 252/2	Screws-Wood-Brass R.H. No.2. x $\frac{3}{8}$"	4	
4	K4/180	-	Glue-Casein Cement	As Req.	

NOTE: Items 1 to 3 inclusive will be supplied by De Havilland Aircraft Pty. Ltd. to Sub-modification section 2 Aircraft Depot, which will issue these items on demand. Item 4 will be drawn from the unit store.

Salvage

4. No parts will be rendered redundant by the incorporation of this modification.

Method of Incorporation

5. The following is the sequence of operations for the incorporation of this modification:-

(a) Drill four (4) No. 28 holes for rawl plugs at the position shown on the drawing A.11944, using a stop on the drill to ensure the holes do not damage or touch the outer ply.

(b) Insert the rawl plug with glue (item 4) and allow three to four hours drying time. Pare off any protruding portion of rawl plug.

(c) Screw the name plate to rawl plugs using four (4) off Item 3.

(d) Record the modification in the airframe log book.

Drawings

6. Drawing A11944 is attached.

Effect on Weight and Balance

7. The effect of the incorporation of this modification on the weight and balance of the aircraft is negligible.

References : Files R.A.A.F. 9/84/16 and 150/4/8367
D.H. Aust. Mod. V.97
L.M.C. Meeting No. 18

Attachment : Drawing No. A.11944.

Date of Issue : 6th November, 1953.

NOT SCALE

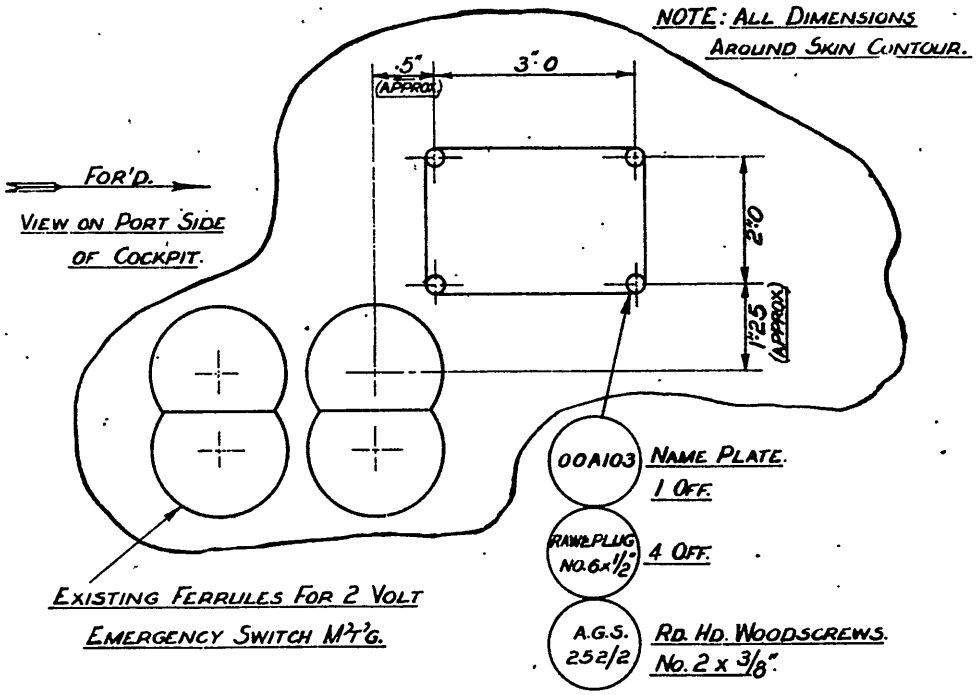

D.H. DRG. No. 00M175.

REFERENCE	ISSUED BY	TITLE
	DIRECTORATE OF TECHNICAL SERVICES R.A.A.F	TO INTRODUCE MANUFACTURERS LABEL

LIMITS UNLESS STATED		MATERIAL		COMPONENT OF	COCKPIT
DECIMALS	± 0'0"	SPEC.		MACHINE	VAMPIRE MK 30
FRACTIONS	± 1/64"	TREATMENT		ENGINE	NENE - 2 V H
ANGLES	± ½°	FINISH		TECH ORDER	VAMPIRE MOD. NO. 33
SURFACE FINISH AUSTRALIAN STANDARD ENGINEERING PRACTICE A.S.E.P.		SCALE		DRAWING No.	A-11944
		DRAWN	APPROVED		DRAWING SIZE A
		TRACED	CHECKED		

Restricted

Air Force Head-Quarters

Technical Order

VAMPIRE MODIFICATION NO. 34

Application: Vampire Mk. 30 see para. 2

Classification: Class 2.

A.S.I. PIPE LINES - LENGTHENED CONNECTIONS

Introduction

1. To lengthen flexible connections between A.S.I. pipe lines and instrument panel so as to eliminate possibility of a restriction, caused by kinking of the hoses.

General

2. This modification is applicable to twenty-four (24) Vampire Mark 30 aircraft not incorporating the approved equivalent modification De Havilland (Aust.) Modification - No. V123.

3. This modification is to be incorporated as follows:-

(a) Aircraft-in-use : Not later than next minor inspection

(b) Aircraft undergoing repair or inspection : During such repair or inspection

(c) No special tools are required

(d) Man-hours : Approximately 6 man-hours excluding testing time

Supply

4. The following parts are required to complete one modification set:-

Item No.	Ident.. No.	Part No.	Nomenclature	No. off per A/c.	Stores Class.
1	T32c/143	N.A.	Tubing, Braided Inst. 5/16" I/D DTD.373	2 lengths each 24" long	C
2	I1/486	N.A.	22 SWG. Brass Locking Wire	As Required	C

Note (a) Items 1 and 2 are to be drawn from unit store.

Salvage

5. The following parts are declared redundant:-

Item No.	Ident. No.	Part No.	Nomenclature	No. off per a/c.	Stores Class.
3	T32C/143	N.A.	Tubing, Braided Inst. 5/16" I/D by 9" long DTD. 373	2 lengths each 9" long	C

Note: (a) Item 3 is to be disposed of in accordance with current authorised procedure.

Method of Incorporation

6. Remove fuel gauge panel located centrally under the blind flying panel in the cockpit.

7. Remove the A.S.I. pitot and static connections from the tee pieces located behind the panel, removed at op.6, by unscrewing the coupling nut on each.

8. Remove the detachable nose panel and lower the access door in the front armour plate.

9. Trace the flexible hose through to the connections on the instrument panel and remove the wire binding. Withdraw both hoses.

10. From hoses remove coupling nut, short length of 5/16 O/D pipe and the rubber washer. Retain these parts but discard hoses (item 3).

11. Assemble the parts removed at Op.10 to new hoses (item 1) and firmly bind with brass wire (item 2).

12. Refit hoses to instrument panel and firmly bind with brass wire.

13. Suitably coil the excess tubing round the back of the panel in such a manner that the hose is quite flexible but is not likely to chafe or kink. Lash as necessary.

14. Reconnect the coupling nuts on the other end of the tube to the tee piece behind the fuel gauge panel ensuring that connections are not crossed.

15. Carry out A.S.I. test in accordance with current authorised procedure.

16. Re-wire lock connections at the tee piece and replace fuel gauge panel.

17. Close access door in front armour, wirelock wing nuts and replace detachable nose panel.

18. Record the modification in the airframe log book.

Drawings

19. No drawings will be required.

Effect on Weight and Balance

20. The effect of the incorporation of this modification on the weight and balance of the aircraft is negligible.

References : Files R.A.A.F. 9/84/16 and 150/4/8368
A.R.D.U. defect report 105/4/ENG(1/51)
D.H. Aust. Mod. V123 L.M.C. Meeting No.25.

Date of Issue : 15th April, 1953.

(d) No special tools are required.

(e) The trade mustering responsibility for this modification is aircraft fitter.

Supply

3. The following parts will be required to complete one modification set:-

Item No.	Ident. No.	Part No.	Nomenclature	No. Off per a/c	Stores Class
1	A79/501813	J001791 Mk. 1	Bolt rudder pedestal	2	C
2	A79/501814	J001791 Mk. 2	Bolt rudder pedestal	2	C
3	A79/501828	K00941ND	Washer, special	2	C
4	H28B/5032	AGS.784/3	Pin, split	12	C

Note: Items 1 to 4 will be drawn from unit stores.

Salvage

4. The following parts are declared redundant:-

Item No.	Ident. No.	Part No.	Nomenclature	No. Off per a/c	Stores Class
5	H28/7293	A15Y/8E	Bolt, ¼" BSF. x 1.30" long H.T.S.	2	
6	H28/7295	A15Y/12E	Bolt, ¼" BSF. x 1.70" long H.T.S.	2	
7	H28C/3073	AGS.160/E	Washer, plain 5/16"	2	
8	H28B/5032	AGS.784/3	Pin, split	12	

Note: Items 5 to 7 are to be disposed of in accordance with current authorised procedure.

Method of Incorporation (detailing the modification in full):

5. The following is the sequence of operations for the embodiment of this modification:-

(a) Refer figure 21, Australian Air Publication 828.

(b) Remove detachable rear fairing from aft end of tail boom.

(c) Locate the rudder pedestal (as shown in figure 21) and detach the connecting rod by removing split pin, nut and 5/16 inch special bolt. Do not alter the setting (length) of the connecting rod.

(d) Detach the rudder balance link plates from the pedestal.

(e) Remove the split pin, 5/16 inch nut and washer from the spigot at the bottom rudder hinge point - discard the washer (item 7) and split pin (item 8).

(f) Remove the bolt from the top rudder hinge.

(g) Remove the rudder.

(h) Remove the split pin, nut, washer and bolt from the thinner side of the mating flanges of the pedestal, and open out the hole with 17/64 inch drill. Ream to .281 inch ± .0003 inch diameter. Discard the bolt (item 5) and split pin (item 8).

(i) Fit new bolt (item 1) together with washer and nut retained at operation (h) and new split pin (item 4).

(j) Remove the split pin, nut, washer and bolt from the thicker side of the mating flanges of the rudder pedestal and open out the hole with 17/64 inch drill. Ream to .281 inch ± .0003 inch diameter. Discard the bolt (item 6) and split pin (item 8).

(k) Fit new bolt (item 2) together with washer and nut retained at operation (j) and new split pin (item 8).

(l) Delete the part Number J00731A from the lower pedestal (which is bolted to the rudder) and repart Number J001793A.

(m) Delete the part Number J00730 from the rudder pedestal (riveted to rudder), and repart Number J001795.

(n) Assemble the rudder to the hinges. On the bottom hinge spigot assemble new washer (item 3) and nut (retained at operation (e)) and new split pin (item 4).

(o) Re-assemble all linkage using nuts, bolts and washers previously removed and new split pins (item 4).

(p) Replace detachable rear fairing.

(q) Repeat operations (b) and (o) on opposite boom.

(r) Check the rudder movement.

(s) Record the modification in the Airframe Log Book.

Drawings

6. No drawings will be required.

Effect on Weight and Balance

7. The effect of the incorporation of this modification on the weight and balance of the aircraft is negligible.

References : Files R.A.A.F. 150/4/8369
D.H. Aust. Mod. V.113
AM. Mod. VAM.529
L.M.C. Meeting No. 24

Date of Issue : 11th December, 1953.

Air Force Head-Quarters

Technical Order

VAMPIRE MODIFICATION NO. 36

Application: Vampire Mk.30 see Para.2(a)

Classification: Class 4

TELEFLEX CLAMP CONNECTORS - NEW TYPE

Introduction

1. This modification introduces a new type of teleflex conduit clamp connector and conduit clamp in lieu of type B532, which Messrs. Teleflex have ceased producing. A number of the old type have been found cracked and the introduction of the later type will overcome this defect.

General

2. (a) This modification has been introduced by the manufacturer at the following stages :

Aircraft D.H. Serial No.	Extent of Incorporation of full Modification
4032, 4033	Trim controls in engine bay.
4034 to 4041 (inclusive)	Trim controls in engine bay. Complete installation in wings.
4042 to 4047 (inclusive)	Trim controls in engine bay. Complete installation in wings. Trim controls in cockpit. H.P. Cock control. Master switch control.
4048 and subsequent	Complete installation.

Note: Aircraft D.H. Serial No. 4001 to 4047 will have the older type of clamp connectors replaced by the new type only if, during routine inspection, they are found faulty and would normally be renewed, or if the conduits or cables have to be replaced.

(b) This modification is applicable to Vampire Mk.30 aircraft not incorporating the approved equivalent modification, De Havilland (Aust.) modification V.116.

(c) This modification is to be incorporated as follows:-

(i) Aircraft in use : Refer paragraph 2(a).

(ii) Aircraft undergoing repair or inspection : During such repair or inspection if required.

(d) No special tools are required.

(e) The trade mustering responsibility for this modification is aircraft fitter.

Supply

3. The following parts will be required to complete one full modification set:-

Item No.	Ident. No.	Part No.	Nomenclature	No. off per a/c	Stores Class
1	T27K/568	B29140/1	Clamp, teleflex type "B" No.2	10	
2	A79/501824	G001779	Clamp, connector teleflex conduit	6	
3	A79/501825	G001781	Block, clamp	4	
4	H28/7279	A25/8C	Bolt, hex. 2BA x 1.2" long H.T.S.	2	
5	H28/7281	A25/11C	Bolt, hex. 2BA x 1.5" long	4	
6	H28/7282	A25/12C	Bolt, hex. 2BA x 1.65" long	2	
7	H28/7283	A25/13C	Bolt, hex. 2BA x 1.75" long	2	
8	G5F/20078		Bakelite fabric base $\frac{1}{8}$" thick spec. commercial	A.R.	
9	11/1444		Wire, soft iron locking 20 S.W.G.	A.R.	

Note: Items 1 to 9 are to be drawn from unit stores.

Salvage

4. The following parts are declared redundant:-

Item No.	Ident. No.	Part No.	Nomenclature	No. off per a/c	Stores Class
10	T27K/308	B532	Clamp, teleflex conduit	8	
11		G00102	Clamp, teleflex conduit (made from T27K/308)	8	
12		G00103	Packing	4	
13	H28/7278	A15Y/7C	Bolt, hex. 2BA x 1.1" long H.T.S.	2	
14	H28/7014	A1/7C	Bolt, hex. 2BA x 1.1" long	4	
15	H28/7076	A1/8C	Bolt, hex. 2BA x 1.2" long	2	
16	H28/6999	A1/9C	Bolt, hex. 2BA x 1.3" long M.S.	2	

Note: Items 10 to 16 are to be disposed of in accordance with current authorised procedure.

Method of Incorporation

5. In the fuselage, the clamps to be replaced are situated on the port side as follows:- (for those in wheel well, refer paragraph 8).

(a) Cockpit - two positioned forward of bulkhead 2 (trim control).

(b) Ammunition Bay - one positioned forward of bulkhead 3 (H.P. Cock)

(c) Tank Bay - one positioned on master switch conduit and one on each of the fuel cock conduits.

(d) Engine Bay - one positioned on each of the trim conduits.

6. For replacement of any one of the above (item 10), the cable is to be withdrawn from the conduit concerned and the connector removed.

Note: This involves a considerable amount of work and it is therefore suggested that all clamp connectors be replaced so as to avoid a repetition removal of numerous components.

7. From item 1, remove the coupling nuts and fit to ends of the particular conduits to be joined. Determine the lengths of conduit to be cut back to suit new larger connector, slightly bell ends and connect up. Replace cable in accordance with Aircraft Engineering Instructions General Part 7, Section 2, Instruction 7.

Note: The connectors positioned on each of the fuel cock conduits mentioned in paragraph 5 (c) do not join separate conduits, but function as clamps only. Discard clamps (item 10) and bolts (item 13) and replace with clamps (item 2) and bolts (item 4).

8. In each wing, there are four clamps to be replaced. Two on rib 3 at the inboard end of the wheel well and two positioned on brackets on the bottom skin both forward and aft of wheel well between ribs 3 and 4. These are accessible through inboard front and rear cover plates in wheel well wall.

9. For the replacement of any one of the above, the cable is to be withdrawn (refer figure 58, Australian Air Publication 828) from the conduit and the connector removed.

10. Having removed the two connectors (item 11) on rib 3, discard the four bolts (items 14, 15 and 16) together with packings (item 12).

11. Using material (item 8) make up new packings to same dimensions as those removed at operation 10 (1 off per wing).

12. Fit coupling nuts and bell ends of conduits in similar manner to that adopted at operation 7.

13. Replace clamps (item 11) positioned on bottom skin, referred to in paragraph 8, with new clamps (item 2).

Note: There is no joint in the conduit at these clamps.

14. Refit conduits rebending as necessary. Connect up and clamp to Rib 3 with item 3 (which fits over connector) using bolt (item 5) at the forward position and bolts (items 6 and 7) at the aft clamp.

Note: Between the clamp and rib 3 at the forward position only fit packing block made at operation 11.

15. Check the operation of all controls affected by these alterations.

16. Wirelock all connections using item 9.

17. Record the alterations in the airframe log book.

Drawing

18. No drawings will be required.

Effect on Weight and Balance

19. The effect of the incorporation of this modification on the weight and balance of the aircraft is negligible.

References	:	Files R.A.A.F. 9/84/16 and 150/4/8370. D.H. (Aust.) Mod. V.116 A.M. Mod. VAM.818 L.M.C. Meeting No. 26
Date of Issue	:	14th December, 1953.

D.T.S

Restricted

Air Force Head-Quarters

Technical Order

VAMPIRE MODIFICATION NO. 37

Classification: Class 1 2 A

RELAYS TYPE 'Q' - INTRODUCTION

Reason for and Description of Modification

1. Cases have occurred of inadvertent firing of the guns due to the type P relays sticking. This modification substitutes the type Q relay which has proved to be a more reliable type.

2. This modification assumes that Vampire Modification No.9 has been incorporated. However, if Vampire Modification No.9 has not been incorporated, it will then be necessary that the installation be modified in accordance with both these modifications.

Application

3. This work is to be carried out on all Vampire Aircraft Mark 30 and 31 which have not had the equivalent makers modification D.H. (Aust.) Modification V127 incorporated.

Responsibility for Incorporation

4. This modification is to be incorporated ~~at the next major servicing period.~~ NOT LATER THAN THE NEXT MINOR SERVICING AFTER RECEIPT OF PARTS A The trade mustering responsible is electrical. Armament and airframe personnel are to be called on for necessary assistance.

Action in Respect of Spares

5. Not applicable.

Orders Superseded or Cancelled

6. Not applicable.

Equivalent Modifications

7. De Havillands (Aust.) Modification V127 is the equivalent modification.

Supply

8. The following parts are required to complete one modification set:-

Item No.	Ident. No.	Part No.	Nomenclature	No. off per a/c	Stores Class.
* 1		00N455A	Plate Mounting	1	C
2		AGS245/23	Screws Rd.Hd. Steel 4BA x $\frac{5}{8}$" long	8	C

Item No.	Ident. No.	Part No.	Nomenclature	No. off per a/c	Stores Class.
* 3	G5C/2007		Relay Unit, Type Q, No.2. 24 volts	4	A
4	G5E/30155		Cable L.T. AN18 One Core Vin. Spec. G107	9'0"	C
6	G5E/30173		Cable L.T. AN12 One Core Vin. Spec. G107	16'2"	C
9	G5F/20063		Tubing Insulating Flexible 9 m.m.(i.d.)	6"	C
10			Waxed Linen Thread	As Req.	C
10a	G5E/30110		Cable AN18 One Core Vin.	5'0"	C

* No alternatives are permitted for items marked with an asterisk without prior reference to Air Force Head-Quarters.

Notes:- (a) Item No.1 will be delivered from De Havilland Aircraft Pty.Ltd. to sub-modification section 2 Aircraft Depot. Sub-modification section will issue this item to units on demand.

(b) Items Nos. 2 to 10a will be drawn from the unit store.

Disposal of Parts Removed

9. The following parts are rendered redundant by the incorporation of this modification:-

Item No.	Ident. No.	Part No.	Nomenclature	No. off per a/c	Stores Class.
11		00N237A	Cable Assem. Gun Relays and terminal block	1	C
12		00N263	Plate Mounting	1	C
13	G5C/1722		Relay Unit Type "P" No.1 24 V	4	A
14		AGS249/25	Screw, Csk.Hd.Steel 4BA x $\frac{7}{8}$" long	8	C

Note:- Item No.13 is to be conditioned and returned to unit store. Item No.14 is to be redirected to other service use. Items 11 and 12 are obsolete and are to be disposed of in accordance with current authorised procedure.

Disposal of Parts in Stock

10. Not applicable.

When the Modification is to be incorporated

11. This modification is to be incorporated in all applicable Vampire aircraft as soon as practicable, but not later than the next major servicing after receipt of parts.

Method of Incorporation

12. (a) Man-hours involved : Approximately 60 man-hours will be required to incorporate this modification.

(b) Special Tools, Jigs &c. : No special tools are required.

(c) Sequence of Operations

(i) Trestle the aircraft in accordance with Australian Air Publication 828 Figure 9. Although this is not essential, it is desirable, to allow improved accessibility.

(ii) Remove the gun bay doors, and then remove the guns.

(iii) At the gun firing relay (under the ammunition compartment floor) disconnect the leads from conduit C6A, the earth cable, and the leads to the terminal block.

(iv) Remove the gun firing relay units (item No.13) and mounting plate (item No.12) from the aircraft and discard. Retain the screws and washers used for attaching the mounting plate to the ammunition floor. Discard screws (item No.14) used for attaching relay units to the mounting plate.

(v) Disconnect the gun firing relay's earth cable at the earth terminal on bulkhead No.4, remove this cable from the aircraft and retain so that it may be re-worked (see sub-paragraph (ix)). Retain clips, screws &c.

(vi) At the terminal block, under the ammunition compartment floor, disconnect the leads from the gun firing relays and remove the cable (item 11) from the aircraft and discard.

(vii) At the plug sealing plate on bulkhead No.2 disconnect loom C6A.

(viii) Unclip loom C6A, where it runs behind bulkhead No.2 and under the ammunition floor, and also unclip the loom along the fuselage side until the socket (disconnected in sub-paragraph (vii)) hangs low enough to allow the loom to be reworked (refer sub-paragraph (xiii)). Retain all clips, screws, &c.

(ix) Take the earth removed from the aircraft as in sub-paragraph (v), remove the terminal lug by unsweating and discard the cable. Retain the terminal lug and P.V.C. sleeves.

(x) Make up a new earth cable as shown on drawing No.A11971 sheet 2 using item No.6 and terminal lug and sleeves removed from original cable as in sub-paragraph (ix).

(xi) Make up new cable assembly, the interconnection, between gunfiring relays and terminal blocks as shown in drawing No. A11971 sheet 3, using items 6, 9 and 10.

(xii) Assemble relay units (item 3) to the mounting plate (item 1) using screws (item 2) and add link wiring to the relay unit using cable (item 4) as shown on drawing No. A11971 sheet 4.

(xiii) Rework loom C6A (refer sub-paragraph (viii)) as follows:-

(1) Unscrew the coupling nut from the back of the socket and pull back the inner and outer ferrules as far as possible to allow access to pin connections.

(2) Disconnect the cables connected to pins B,C,F, 1 and 2 on the socket by unsweating. Retain P.V.C. sleeves.

(3) Withdraw the five disconnected cables from the loom - these five cables all form part of that branch of the loom which connected to the gun relays.

(4) Add five new cables by drawing them through the existing P.V.C. tubing, add the P.V.C. sleeves (sub-paragraph (b)) at the socket end and then solder the cables to the socket as follows:-

Connect to pin "B" one piece of item 4 2' 8" long
Connect to pin "C" one piece of item 4 3' 4" long
Connect to pin "F" one piece of item 4 2' 11" long
Connect to pin "I" one piece of item 6 2' 7" long
Connect to pin "2" one piece of item 6 3' 3" long

(5) Add coding to new cables (at open end) as follows:-

Cable from pin "B" to be coded "CG4"
Cable from pin "C" to be coded "CG5"
Cable from pin "F" to be coded "GF8"
Cable from pin "I" to be coded "GF 14"
Cable from pin "2" to be coded "GF24"

(6) Pull the inner and outer ferrules back to their original position and screw the coupling nut tight.

(7) Change the part number of the modified loom to 00N465A.

(xiv) Install the gun firing relays assembly as shown on drawing No. A11971 sheet 1 using the existing screws and clips &c. as in sub-paragraph (iv).

(xv) Reclip the modified loom C6A behind bulkhead No.2 under the ammunition compartment floor, and along the fuselage side as originally fitted, using existing screws, clips &c., (see sub-paragraph (viii)).

(xvi) Instal the new earth cable (part No. 00N463A) in the same manner as originally fitted using the existing clips, screws &c., (see sub-paragraph (v)).

(xvii) Instal the new cable connecting the relay units to the terminal blocks (part No.00N461A) in the same manner as originally fitted.

(xviii) At the relay units, connect the leads from the loom C6A from the terminal block, and the earth cable as shown on drawing No. A11971, sheet 1.

(xix) Functionally test the gun firing circuit to check that the modification has been correctly incorporated.

(xx) Replace guns, gun bay doors and then remove trestles.

(d) Tests : Refer sub-paragraph (xix) above.

(e) Recording : Enter the modification in the airframe log book.

Drawings

13. Drawing number A11971 will be sent to units on request.

Effect on Weight and Balance

14. The effect of the incorporation of this modification on the weight and balance of the aircraft is negligible.

References : D.H. (English) Mod. No. VAM895
D.H. (AUST) Mod. No. V127
L.M.C. Meeting No.29
R.A.A.F. HQ files 150/4/8371 and 9/84/36

Date of Issue : 13th October, 1953.

Restricted

Air Force Head-Quarters

Technical Order

VAMPIRE MODIFICATION NO. 38

Application: Vampire Mk.30 see para. 2.

Classification: Class 2.

DRAIN PLUGS, A.S.I. LINES - WIRE LOCKING

Introduction

1. Wire locking of the A.S.I. drain plugs inside the port tail boom has to be accomplished via their small diameter access holes in the skin. As the operation has proved difficult in service, new plugs, incorporating a greater head depth, are introduced in order to permit locking outside the boom contour.

General

2. This modification is applicable to forty five (45) Vampire Mark 30 aircraft not incorporating the approved equivalent modification De Havilland (Aust.) Modification No. V142.

3. This modification is to be incorporated as follows:-

(a) Aircraft-in-use : Not later than next minor inspection after receipt of modification sets.

(b) Aircraft undergoing repair and inspection : During such repair or inspection

(c) No special tools are required.

(d) Man-hours : Approximately : 1 man-hour per aircraft.

Supply

4. The following parts will be required to complete one modification set:-

Item No.	Ident. No.	Part No.	Nomenclature	No. off per a/c.	Stores Class.
1	A79/502012	Q003655	Plug, drain	2	
2	I1/1444	N.A.	Wire, locking 20 swg. soft iron	As reqd.	C

Note: (a) Item 1 will be delivered from De Havilland Aircraft Pty.Ltd., to Modification Section, No.2 A.D., which will issue this item to units on demand

(b) Item 2 will be drawn from unit store.

Salvage

5. The following part will be rendered redundant by the incorporation of this modification:-

Item No.	Ident. No.	Part No.	Nomenclature	No. off per A/C.	Stores Class.
3	A79/500979	Q00118	Plug, drain	2	

Note: (a) Item 3 is, if undamaged, to be returned to stock.

Method of Incorporation

6. Remove the wire locking from the A.S.I. drain plugs and then unscrew and remove the plugs (item 3). Note that the two gaskets (Part No. Q00111) should be retained.

7. Fit the new drain plugs (item 1) together with the original gaskets and then wire lock with 20 swg. soft iron wire (item 2).

8. Record the modification in the airframe log book and on wing mod. plate.

Drawings

9. No drawings will be required.

Effect on Weight and Balance

10. The effect of the incorporation of this modification on the weight and balance of the aircraft is negligible.

References : Files R.A.A.F. 9/84/16 and 150/4/8372
D.H. Aust. Mod. V.142
A.M. Mod. 3032
L.M.C. Meeting No. 30

Date of Issue : 13th April, 1953.

Air Force Head-Quarters

Technical Order

VAMPIRE MODIFICATION NO. 39

Application: Mk.30 (see para. 2a)

Classification: 2

CLIPPING OF DIVE BRAKE JACK HOSE - INTRODUCTION

Introduction

1. The dive brake hose tends to sag during service and chafes on the aileron control cable.

This modification details parts required and work involved in introducing a clip on the false spar to support the dive brake hose.

General

2. (a) This modification is applicable to Vampire Mk.30 aircraft not incorporating the approved equivalent modification, De Havilland (Aust.) Modification V.88.

(b) This modification is to be incorporated as follows:-

(i) aircraft in use : Not later than the next minor inspection after receipt of the modification sets.

(ii) aircraft undergoing repair or inspection : During such repair or inspection.

(c) No special tools are required.

(d) Man-hours : Approximately two (2) man-hours.

(e) The trade mustering responsibility for the incorporation of this modification is airframe fitter.

Supply

3. The following parts are required to complete one modification set:-

Item No.	Ident. No.	Part No.	Nomenclature	No. Off per A/c	Stores Class
1	-	A12057/1	Bracket	2	
2	H28/26104	DHS/30/7	Pipe Clip ½" x 2" long	2	
3	H28C/2857	AGS245/21	Screw Rd.Hd. 4 BA x ⅜"	2	
4	H28/10327	AGS2002/B/1	Stiffnut, 4 BA, Thin steel	6	
5	H28C/2863	AGS245/22	Screw, Rd.Hd. 4 BA x ½"	4	
6	H28C/3070	AGS160/B	Washer, Steel, plain, .15" i/d	8	

Supply (Cont'd)

Note: Item 1 is to be made up in unit workshops. Items 2 to 6 inclusive are to be drawn from unit stores.

4. There will be no parts rendered redundant by the incorporation of this modification.

Method of Incorporation

5. (a) See warning in Australian Air Publication 828 prior to paragraph 120. Lower dive brakes exposing the dive brake hoses and false spar (Reference Australian Air Publication 828, section 5, paragraph 162.).

(b) Open out two No.30 drill holes in bracket, item 1, and attach bracket to false spar in accordance with drawing No. A.12057 using two 4 BA screws, item 5, two stiffnuts, item 4, and four washers, item 6, per bracket.

(c) Attach hose and clip, item 2, to bracket using 4 BA screws, item 3, and stiffnut, item 4, making sure that the clip is positioned vertically above its locating hole in the bracket as in drawing A12057/1.

(d) Function dive brake to check freedom of hose and return it to 'OFF' position.

(e) Record the modification in the airframe log book.

Drawing

6. Drawing A12057 and A12057/1 are attached.

Effect on Weight and Balance

7. The effect of this modification on weight and balance of the aircraft is negligible.

References : Files R.A.A.F. 9/84/16 and 150/4/8373.
D.H.Aust. Mod. V.88.
L.M.C. Meeting No. 16

Attachments : Drawings A12057 and 12057/1

Date of Issue : 6th May, 1954.

DO NOT SCALE

ISSUE NO.	DATE	ALTERATION	D. L.	INITIALS	APPROVED
1					

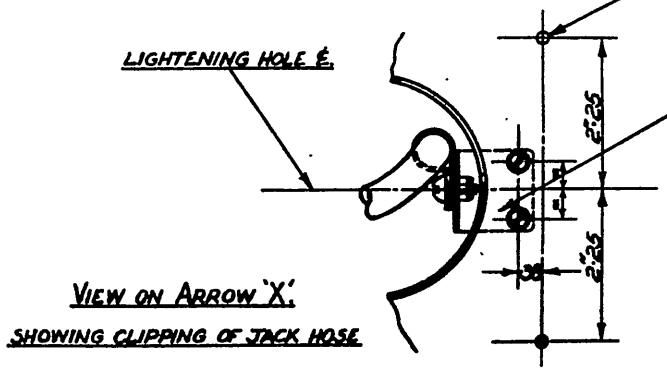

VIEW ON ARROW 'X'.
SHOWING CLIPPING OF JACK HOSE TO FALSE SPAR.

A-12057/1 -	BRACKET 1 OFF.
DHS 30/7	'P' CLIP 1 OFF.
AGS 245/21	4 BA SCREW 1 OFF.
AGS 2002/8/1	STIFFNUT 3 OFF.
AGS 245/22	4 BA SCREW 2 OFF.
AGS 160 B	WASHER 4 OFF.

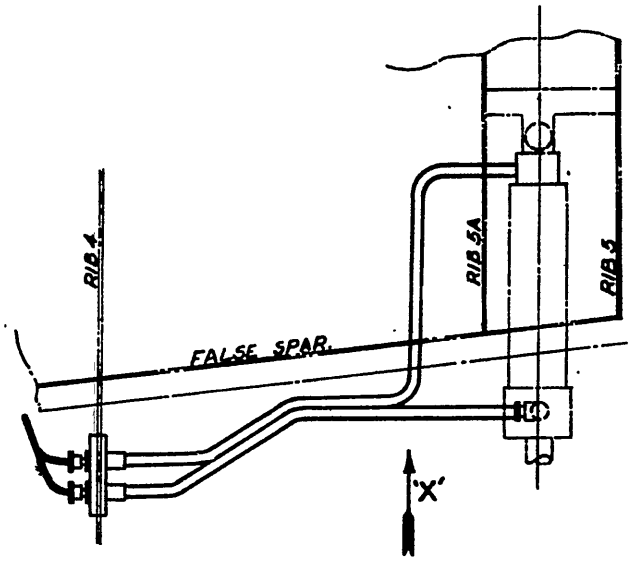

VIEW ON STARBOARD WING.

D.H.DRG. NO. 00M172

REFERENCE	ISSUED BY	TITLE
	DIRECTORATE OF TECHNICAL SERVICES R.A.A.F.	CLIPPING of DIVE BRAKE JACK HOSE.

LIMITS UNLESS STATED		MATERIAL		COMPONENT OF	HYDRAULIC SYSTEM
DECIMALS	± .010"	SPEC.		MACHINE	VAMPIRE MK 30.
FRACTIONS	± 1/32"	TREATMENT		ENGINE	NENE - 2VH
ANGLES	± ½°	FINISH		TECH. ORDER	VAMPIRE MOD No. 38
SURFACE FINISH AUSTRALIAN STANDARD ENG. DRWG. PRACTICE A.S.E.21		SCALE		DRAWING NO.	A - 12067
		DRAWN	APPROVED		DRWG. A SIZE
		TRACED	CHECKED		

DO NOT SCALE

ISSUE NO	DATE	ALTERATION	D. T. L.	INITIALS
1	9-10-53			

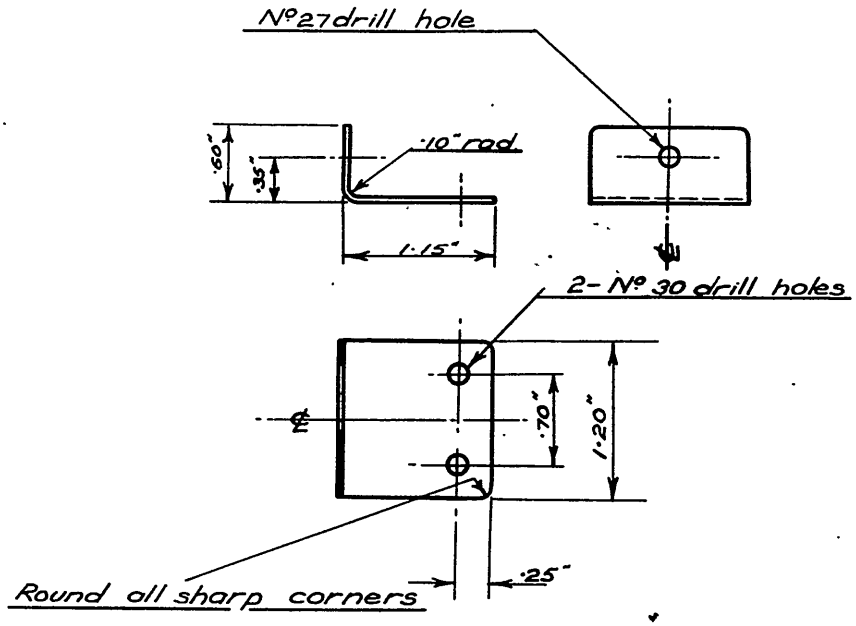

REFERENCE

TITLE

BRACKET
(DIVE BRAKE HOSE CLIP)

DIRECTORATE OF TECHNICAL SERVICES
R.A.A.F.

AL. COATED ALUM. ALLOY. 16 SWG.
(E) D647 D.T.D. 610

LIMITS UNLESS STATED	
DECIMALS	± .010"
FRACTIONS	= 1/32"
ANGLES	± 1°
SURFACE FINISH AUSTRALIAN STANDARD ENG. DRWG. PRACTICE A.S.C.2	

TREATMENT			
FINISH			
SCALE			
DRAWN	K.J.H.	APPROVED	
TRACED	W.J.S.	CHECKED	

OF	
MACHINE	
ENGINE	
TYPE OF AIR	

DRAWING NO. A-12057/1

GAUGES FUEL CONTENTS - INTRODUCTION OF RECALIBRATED GAUGE

Reason for and Description of Modification

1. The indication of fuel contents was formerly calibrated with the aircraft at zero angle of incidence. This gave an inaccurate reading for the aircraft in flight with a consequent uncertainty on the part of the pilot as to how much fuel was left. This order introduces a gauge compensated for the normal flying position of the Vampire Aircraft that is at about five degrees angle of incidence.

Application

2. The modification applies to all Mark 30 Vampires.

Responsibility for Incorporation

3. The modification is to be carried out by units.

Action in Respect of Spares

4. All spares of redundant gauges are to be returned to S. Smith & Sons (Aust.) Pty. Ltd. for rework. Headquarters Maintenance Command will forward issue advice to units concerned.

Orders Superseded or Cancelled

5. No orders are superseded or cancelled by this modification.

Equivalent Modifications

6. De Havilland (Aust.) Modification 119 is the equivalent modification.

Supply

7. The following parts are required to complete one modification set:-

Item No.	Ident. No.	Part No.	Nomenclature	No. Off Per A/c	Stores Class
x 1	G6A/2586-2	1350 Fg.	Gauge Fuel Contents	1	A
x 2	G6A/2587	1351 Fg.	Gauge Fuel Contents	2	A
x 3	G6A/2588	1352 Fg.	Gauge Fuel Contents	2	A

Supply (Cont'd)

Notes: (a) Items 1 to 3 are to be supplied to Sub-modification Centre, No.2 Aircraft Depot, as instructed by Air Force Head-Quarters. Units are to demand on the Sub-modification Centre.

(b) The instruments are to be issued to units by the Sub-modification Centre in the following priority:-

(1) 2 O.T.U. (2) 21 Sqn. (3) 22 Sqn. (4) 25 Sqn.
(5) East Sale (6) A.R.D.U.

x No alternative is permitted for these items without prior reference to Air Force Head-Quarters.

Disposal of Parts Removed

8. The following parts are rendered redundant by the incorporation of this modification:-

Item No.	Ident. No.	Part No.	Nomenclature	No. Off Per A/c.	Stores Class.
4	G6A/3661	735 Fg.	Gauge Fuel Contents	1	A
5	G6A/1969	918 Fg.	Gauge Fuel Contents	2	A
6	G6A/2039	956 Fg.	Gauge Fuel Contents	2	A

Notes: Immediately upon receipt of the replacement parts, the redundant parts, items 4 to 6, are to be returned to S. Smith and Sons (Aust.) Pty. Ltd. Bankstown, N.S.W. for rework. Headquarters Maintenance Command will forward issue advice to units.

Disposal of Parts in Stock

9. Items 4 to 6 are to be disposed of in the same way as parts removed from aircraft.

When the Modification is to be Incorporated

10. This modification is to be carried out as soon as practicable, but not later than the next minor inspection after the receipt of parts.

Method of Incorporation

11. (a) Man-hours involved : Approximately three (3) man-hours are required for the modification of one aircraft.

(b) Special Tools, Jigs, &c. : No special equipment is required.

Method of Incorporation (Cont'd)

(c) Sequence of Operations :

Unscrew and remove each of the five gauges (items 4 to 6) from the bottom centre instrument panel and replace with the five gauges (Items 1 to 3). To avoid confusing electrical connections, removal and replacement should be completed for one position before the instrument in the next position is disconnected.

The following table shows each redundant part and its replacement:-

Indicator	Part Removed	Replacement Part
Outboard, Starboard Tank.	G6A/2039	G6A.2588
Inboard, Starboard Tank.	G6A/1969	G6A/2587
Main Tank.	G6A/3661	G6A/2586-2
Inboard Part Tank.	G6A/1969	G6A/2587
Outboard Part Tank.	G6A/2839	G6A/2588

(d) Tests : Gauges are to be checked for correct operation.

(e) Recording : Appropriate entries are to be made in the Airframe Log Book and Aircraft Schedule.

Drawings

12. No drawings are required for this modification.

Effect on Weight and Balance

13. There is no effect by this modification on weight and balance.

References : Files R.A.A.F. 113/2/1446, 9/84/203
Files 150/4/8523 and 150/4/8374
D.H. Tech. Memo Sheet V143
L.M.C. Meeting No.22.

Date of Issue : 28th April, 1954.

Restricted

Air Force Head-Quarters

Technical Order

VAMPIRE MODIFICATION NO. 41

Application: Vampire Mk.30 see para. 2

Classification: Class 2.

GREASE NIPPLE - EXTENDED TYPE ON NOSEWHEEL JACK

Introduction

1. To introduce an extended type of grease nipple on nose wheel jack attachment bolt as the existing grease nipple is inaccessible.

General

2. This modification is applicable to forty eight (48) Vampire Mark 30 aircraft not incorporating the approved equivalent modification (De Havilland (Aust.) Modification V114.).

(c) The modification is to be incorporated as follows:-

(i) Aircraft-in-use : Not later than next Minor Inspection after receipt of Modification Sets.

(ii) Aircraft undergoing repair or inspection : During such repair or inspection.

(d) No special tools are required.

(e) Man-Hours : Approximately 8 man-hours.

(f) The trade mustering responsibility for this modification is airframe fitter.

Supply

3. The following parts will be required to complete one modification set:-

Item No.	Ident.No.	Part No.	Nomenclature	No. off per a/c.	Stores Class.
1	A79/502-031	G001895A	Nipple, grease extended type	1	A
2	A79/502-022	G001765ND	Shim	1	C
3	H28/776	A16Y/ET	Lock Nut. B.S.F. $\frac{1}{4}$"	2	C
4	H28B/5031	AGS.784/2	Pin, split	1	C

NOTE: (a) Items 1 & 2 will be delivered from Commonwealth Aircraft Corporation to Modification Section, 2 A.D., in sets. Modification Section will issue these sets to units in accordance with aircraft and (or) spares affected.

(b) Items 3 & 4 will be drawn from unit stores.

Salvage

4. The following parts are rendered redundant by the incorporation of this modification:-

Item No.	Ident.No.	Part No.	Nomenclature	No. Off per a/c.	Stores Class.
5	T27H/24789	6878/1	Nipple grease	1	
6	H28B/5031	AGS.784/2	Pin, split	1	

NOTE: Items 5 and 6 will be disposed of in accordance with current authorised procedure.

Method of Incorporation

5. Trestle the aircraft in accordance with fig. 9, A.A.P.828, in order to raise the nosewheel clear of the ground.

6. Remove the detachable nose panel and subsequently, either the S.C.R. 695 radio or ballast weight (which ever is fitted), from the nose compartment.

7. Refer fig. 54, A.A.P.828 and locate the jack attachment bolt, securing the nosewheel jack to the lug on the radius rod (refer item J, fig. 56, A.A.P.828).

8. Remove the grease nipple in the head of the bolt and discard (item 5).

9. Remove split-pin and nut and washer.

NOTE: These two operations (8 & 9) may best be achieved with the nosewheel in a fully or partially retracted position.

10. Lightly tap the bolt out sufficiently far to clear the shoulder on the jack (.060" approx.) which normally prevents the bolt turning.

11. Fit the two nuts (item 3) to the bolt and tighten one against the other so as to provide a medium for turning the bolt.

12. Fit new grease nipple (item 1) and shim (item 2) to the bolt and tighten by means of the locknuts.

13. Remove locknuts and refit nut and washer and pin with item 4.

NOTE: It is important that the greased nipple assembly points downward in the same direction as the lock-plate (item C, fig. 56, A.A.P.828) when the undercarriage is in the "down" position.

14. Carry out retraction test on nosewheel to ensure that the new grease nipple does not foul the structure.

15. Grease the jack attachment bolt and replace all items removed at op. 6.

16. Remove the trestles.

17. Record modifications in the airframe log book.

Drawings

18. No drawings will be required.

Effect on Weight and Balance

19. The eff ect of the incorporation of this modification on the weight and balance of the aircraft is negligible.

References : Files R.A.A.F. 9/84/91 and 150/4/8426
D.H. Aust. Mod. V.114
A.M. Mod. VAM.961
L.M.C. Meeting No.23

Date of Issue : 13th April, 1953.

TS 3

Restricted

Air Force Head-Quarters

Technical Order

VAMPIRE MODIFICIATION NO. 42

Application: Vampire Mk.30 see para. 2

Classification: Class 2.

PILOT'S HARNESS ATTACHMENT - IMPROVED VERTICAL RESTRAINT

Introduction

1. To introduce new type of attachment lug for harness on Pilot's seat to provide required vertical restraint in high speed flight. This necessitates repositioning of harness release control.

2. This modification is applicable to sixteen (16) Vampire Mark 30 aircraft not incorporating the approved equivalent Modification (De Havilland Aust. Modification No. V79).

3. This modification is to be incorporated as follows:-

(a) Aircraft-in-use : Not later than the next minor inspection after receipt of modification sets.

(b) Aircraft undergoing repair or inspection : During such repair or inspection.

(c) No special tools will be required.

(d) Man-hours - Approximately 9 man-hours.

(e) The trade mustering responsible for this modification is aircraft fitter.

Supply

4. The following parts are required to complete one modification set:-

Item No.	Ident. No.	Part No	Nomenclature	No. off per A/C.	Stores Class.
1		C100511	Plate Attachment L.H.	1	
2		C100512	Plate Attachment R.H.	1	
3	A79/501823	00B33	Plate Link	4	A
4	H28/9554	AS1248/7E	Bolt, Mushroom head, 1/4 B.S.F. x 1.~~15~~ 2 long HTS	2	C
5	H28/8311	AS1242/7C	Bolt, C's'k hd. 2BA x 1.10" long HTS	4	C
6	H28/8449(0)	AS1882/1B	Bolt, C's'k hd. 4BA x 45" long M.S.	2	C
7	H28/7030	A1/2C	Bolt, hex. 2BA x .60" long M.S.	[illegible]	[illegible]

AL.5

Item No.	Ident. No.	Part No.	Nomenclature	No. off per A/C.	Stores Class.
8	H28C/5692	AGS249/36	Screw Metal C's'k 6BA x 1¼" long.	2	C
9	H28/5316	A16Y/C.P.	Nut plain 2BA	4	C
10	H28/756	A16Y/EP	Nut plain 1/4" B.S.F.	2	C
11	H28C/12252	SP13/C	Washer Plain 2BA	4	C
12	H28C/12253	SP13/E	Washer Plain 1/4"	2	C
13	H128F/31081	AS2228/609	Rivet Mushroom hd. 3/16" dia. x 9/16" long mag. alloy	2	C

Note. (a) Items 1 to 13 will be delivered from De Havilland Aircraft Pty. Ltd., to Modification Section, No. 2 A.D. in sets. Modification Section will issue these sets to units in accordance with their holdings of aircraft and/or spares affected.

Salvage

5. The following parts are declared redundant:-

Item No.	Ident. No.	Part No.	Nomenclature	No. off per A/C.	Stores Class.
14		AS2123	Plate Attachment	1 IH 1 RH	
15		AS2126	Link Assy. attach.	2	
16		B002523	Block Packing	1	
17		A1/3C	Bolt, hex.hd.2BA x .7" long M.S.	2	
18		AS1242/6C	Bolt, Csk hd.2BA x 1.0" long H.T.S.	6	
19		AS1882/7B	Bolt, csk.hd.4BA x 1.05" long M.S.	2	
20	H28/5316	A16Y/CP	Nut, 2BA Plain	6	
21	H28C/8516	AS470/C	Washer, 2BA Light Alloy	6	
22		AGS160/C	Washer, Plain 2BA	4	

Note: (a) Items 14 to 22 are to be disposed of in accordance with current authorised procedure.

Method of Incorporation

6. Remove the pilots harness release located on starboard side of seat. Retain nuts but discard packing block (item 16) and bolts (item 19).

7. Remove pilot's seat.

8. Detach the pilot's harness from the attachment links by removing 2BA nut bolt and three washers from each side. Retain the nuts and two of the six washers. Discard the bolts (item 17) and the four remaining washers (item 22).

9. Remove and discard attachment link assy. (item 15) comprising link plates shackle pin washer and split-pin.

10. Remove harness attachment plate from each side of the seat by unscrewing three 2BA countersunk bolts from each. Discard plates (item 14) bolts (item 18) nuts (item 20) and washers (item 21).

11. From the seat remove and retain the upholstery fastener and nut, located just below the position where plates were removed at op.10.

12. Locate the 3/16" dia. rivet through seat just below the upholstery fastener position, and drill out.

13. Refer to drawing A11773 and position new attachment plates (items 1 and 2) so that the two holes on plate pick up with the two bottom holes of the group of three previously used to secure (item 14) removed at Op.10. Secure using bolts Item 5 nuts (item 10) and washers (item 11).

14. Spot through into attachment plates, from hole in seat where 3/16" rivet was removed at op.12 and open out to 1/4" dia. Fit bolt nut and washer (items 4, 10 and 12) with bolt head on inside. Rivet bolts over nuts to lock.

15. Drill a No.33 hole back into the attachment plate from the hole in the seat where the upholstery fastener was fitted. Reassemble fastener using nuts, removed at operation 11 and bolt (item 8).

16. Blank off top hole of the three old plate attachment holes with rivet (item 13).

17. Locate and drill two No.26 holes in port side of seat for new position of harness release (refer drawing A11773). Countersink inside face to suit bolts (item 6).

18. Assemble link plates (item 3) to harness using washers and nuts retained at op.8 and bolts (item 7) (refer drawing A11773).

19. Reassemble harness complete to attachment plates using shackle pin, washer and split-pin supplied with items 1 and 2.

20. Re-instal pilot's seat in cockpit.

21. Fit harness release to seat where holes were drilled op.16 using nuts retained at op.6 and new bolts item 6.

22. Check operation of harness release gear.

23. Re-identify pilot's seat A79/501711.

24. Record the modification in the airframe log book.

Drawings

25. Drawing A11773 is attached hereto.

Effect on Weight and Balance.

26. The effect of the incorporation of this modification on the weight and balance of the aircraft is negligible.

References : Files R.A.A.F. 9/84/16 and 150/4/8427
D.H. Aust. Mod. V79. L.M.C. Meeting No. 15
A.M. Mod. Vam. 782

Attachment : Drawing A11773

Date of Issue : 13th April, 1953.

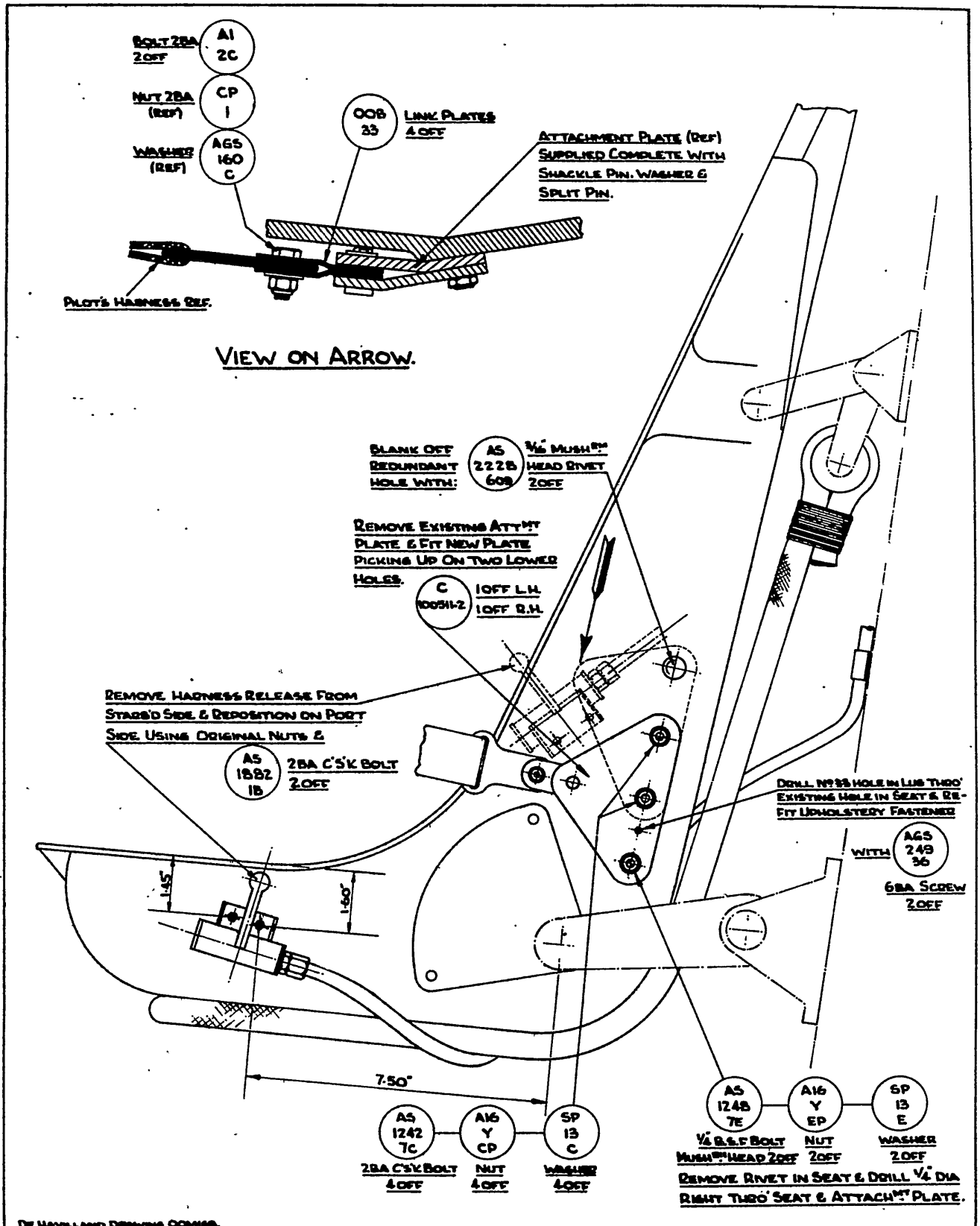

DE HAVILLAND DERWENT COMMER.

REFERENCE	ISSUED BY	TITLE
	DIRECTORATE OF TECHNICAL SERVICES R.A.A.F.	MODIFICATIONS TO PILOT'S SEAT TO GIVE IMPROVED VERTICAL RESTRAINT.

LIMITS UNLESS STATED		COMPONENT OF	COCKPIT
DECIMALS	± ·010"	MACHINE	VAMPIRE MK. 30
FRACTIONS	± 1/32"	ENGINE	NENE-2 VH
ANGLES	± 1/2°	TECH. ORDER	VAMPIRE MOD. 42
SURFACE FINISH AUSTRALIAN STANDARD ENG. DRWG. PRACTICE A.S.C.2.		DRAWING No	A11773

Restricted

Air Force Head-Quarters

Technical Order

VAMPIRE MODIFICATION NO. 43

Application : Vampire Mk.30

Classification : Class 2

PILOT'S ARMOUR - ENLARGED CUT-AWAY

Introduction

1. To enlarge the harness release cut-away in the pilot's back armour and also introduce improved type fairlead so as to eliminate the possibility of harness release cable being kinked or fraying on the sharp edge of the armour plate.

General

2. This modification is applicable to 26 Vampire Mark 30 aircraft not incorporating the approved equivalent modification (De Havilland (Aust.) Modification No. V81.)

3. This modification is to be incorporated as follows:-

(a) Aircraft-in-use : Not later than next minor inspection.

(b) Aircraft undergoing repair or inspection : During such repair or inspection

(c) No special tools are required

(d) Man-hours : Approximately 5 man-hours excluding drying time for Bostik Primer and pressure testing of cockpit.

Supply

4. The following parts are required to complete one modification set:-

Item No.	Ident. No.	Part No.	Nomenclature	No. off per A/C.	Stores Class.
1	A79/501712	12F429	Fairlead	1	C
2	H28/9498	As1882/7C	Bolt, C's'k 2BA x 1.10" long M.S.	1	C
3	K4/10883	1751	'Bostik' primer	As req.	C
4	K4/10882	1790	"Bostik" filleting compound	As req.	C

Note (a) Items 1 and 2 will be delivered from De Havilland Aircraft Pty. Ltd. to Modification Section, No.2A.D in sets. Master Modification Section will issue the sets to units on demand.

(b) Items 3 and 4 are to be drawn from unit stores.

Salvage

5. The following parts are declared redundant:-

Item No.	Ident. No.	Part No.	Nomenclature	No. off per A/C.	Stores Class.
5		B00994	Fairlead	1	
6	H28/8462	AS1882/8C	Bolt, c's'k 2BA x 1.20" long M.S.	1	

Note: Items 5 and 6 are to be disposed of in accordance with current authorised procedure.

Method of Incorporation

6. From the front face of the pilot's back armour remove the fibre fairlead at the harness release cable slot.

Note: The bottom bolt of the group of three is sealed in the armour plate with peratol. This seal will have to be broken and the nut removed from inside the ammunition compartment.

Discard the fairlead (item 5) and one of the bolts (item 6). Retain the remaining bolts and nuts.

7. Disconnect the pilot's harness and take the straps back over the armour plate in order to pull and keep the harness in the top of the slot.

8. Using a portable grinder or a file radius armour plate in accordance with drawing A11770.

Note: This is not a difficult operation with a file, provided that the hard scale is removed from the surface locally either by grinding or by discreet use of a cold chisel.

9. Touch up armour plate to conform to original paint scheme.

10. In the bottom hole of the group, fit new bolt item 2 using Bostik 1790 and Bostik 1751 in accordance with current authorised procedure for sealing of pressurised cockpits. Fit one of the nuts retained at op.6.

11. Assemble new fairlead item 1 using bolts and nuts previously removed at op.6.

12. Check the operation of pilot's harness release.

13. Check cabin pressurising in accordance with para. 140 A.A.P.828.

14. Record the modification in the airframe log book.

Drawings

15. Drawing All770 is attached.

Effect on Weight and Balance

16. The effect of the incorporation of this modification on the weight and balance of the aircraft is negligible.

References : Files R.A.A.F. 9/84/16 and 150/4/8428
D.H. Australian Mod. V81 L.M.C. Meeting No. 15.
A.M. Mod. Vam.807

Attachment : Drawing All770

Date of Issue : 13th April, 1953.

DO NOT SCALE

ISSUE NO	DATE	ALTERATION	D. I. L	INITIALS	APPROVED
1					

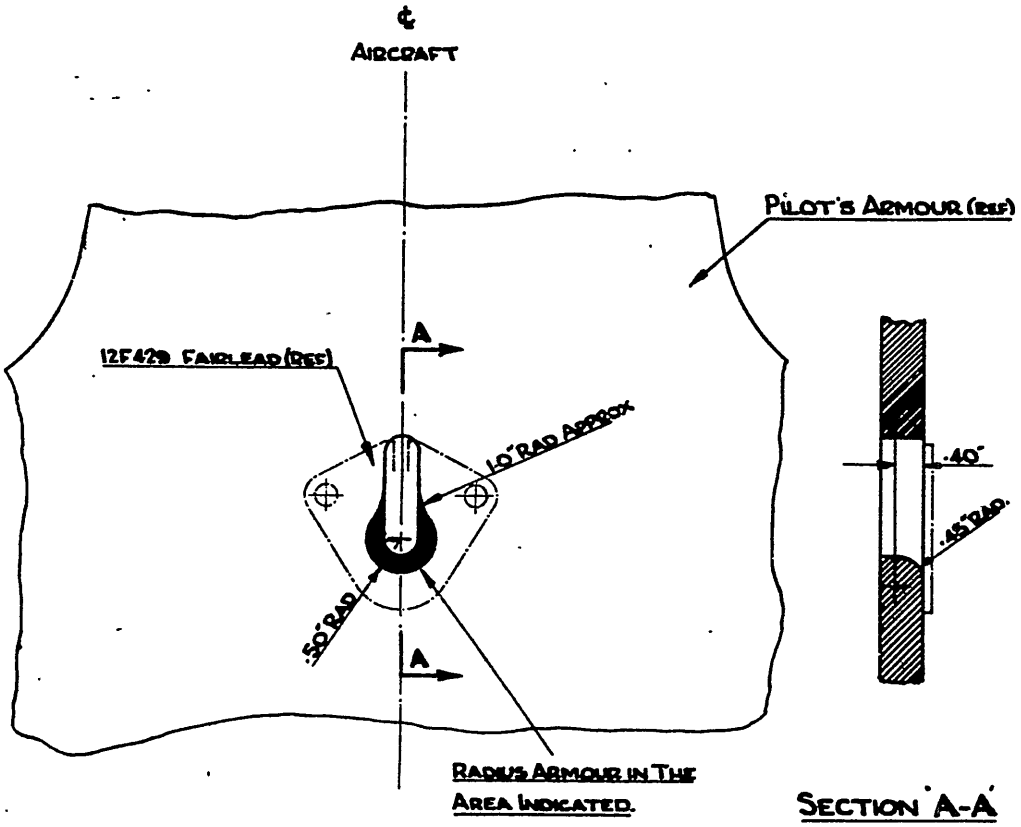

VIEW ON FORWARD FACE.

DE HAVILLAND DRAWING DOM169.

REFERENCE	ISSUED BY	TITLE
	DIRECTORATE OF TECHNICAL SERVICES R.A.A.F.	TO ENLARGE CUT-AWAY IN PILOT'S BACK ARMOUR FOR HARNESS CABLE.

LIMITS UNLESS STATED		MATERIAL		COMPONENT OF	COCKPIT
DECIMALS	± .010"	SPEC.		MACHINE	VAMPIRE MK. 30
FRACTIONS	± 1/64"	TREATMENT		ENGINE	NENE-2 VH
ANGLES	± ½°	FINISH		TECH. ORDER	VAMPIRE MOD 43
SURFACE FINISH AUSTRALIAN STANDARD ENG. DRWG. PRACTICE A.S.C.21		SCALE		DRAWING NO.	A11770
		DRAWN	APPROVED		DRWG. A SIZE
		TRACED	CHECKED		

Restricted

Air Force Head-Quarters

Technical Order

VAMPIRE MODIFICATION NO.44

Application: Vampire Mk.30 see para 2(a)

Classification: Class 2

DUAL BRAKES - INTRODUCTION

Introduction

1. This modification introduces a dual brake unit in lieu of single brake unit on the main wheels, providing for a greater braking effort necessary to cope with the increased all up weight of the Aircraft. Additionally the improved design provides for a greater dissipation of heat, thus considerably increasing the life of the rubber brake bags, which operate the brake shoes.

General

2. This modification is applicable to Vampire Mk.30 aircraft not incorporating the approved equivalent modification, De Havilland (Aust.) modification V.78.

(a) The modification is to be incorporated as follows:-

(i)	Aircraft in use	:	Not later than next major inspection after availability of parts.
(ii)	Aircraft undergoing repair or inspection	:	During such repair or inspection after availability of parts.

(b) The following special tools will be required:-

A79/500012 - Spanner - Main Wheel retaining nut.
A79/500062 - Extractor - Main Wheel.

(c) Man-hours : Approximately 18 man-hours.

(d) The trade mustering responsibility for this modification is airframe fitter.

Supply

3. The following parts will be required to complete one modification set:-

Item No.	Ident. No.	Part No.	Nomenclature	No. off per set	Stores Class.
1	T27A/2786	FC7	Tube, inner	2	
2	T27A/2785	AH9139	Wheel	2	
3	T27A/500047	AH9140	Unit, Brake	2	
4		AS1882/5G or	Bolt 5/16" BSF x 1".0 lg csk.M.S., or	14	
	H28/10742	1242/5G	Bolt BSF 5/16" x 1" csk HTS		
5		AS1882/6G or	Bolt 5/16" BSF x 1.1" lg csk.M.S., or	4	
	H28/10743	1242/6G	Bolt BSF 5/16" x 1.1 csk HTS		
6	H28B/5032	AGS784/3	Pin split 1/16" dia. x 1.0" long S.S.	18	
7	H28/7638	6A1/20C	Bolt 2 BA x 2.4" lg.hex. MS	2	
8	H28/10288	AGS2001/C1	Stiffnut 2 BA	2	
9	H28C/3071	AGS160/C	Washer 2 BA	2	

"Note: Items 1 to 9 inclusive are to be delivered from De Havilland Aircraft Pty. Ltd. to sub-modification section, which is to issue these items on demand."

(Issued with A.L.17 - May, '54).

Salva

4. The following parts are rendered redundant by the incorporation of this modification:-

Item No.	Ident. No.	Part No.	Nomenclature	No. off per set	Stores Class
10	T27A/2255	F.C9	Tube, inner	2	
11	T27A/2086	AH8218	Wheel	2	
12	T27A/14341	AH8902	Unit, brake	2	
13		AS1882/3G	Bolt 5/16" BSF x .80" lg. CSK M.S.	14	
14		AS1882/4G	Bolt 5/16" BSF x .90" lg. CSK M.S.	4	
15	H28B/5032	AGS784/3	Pin split 1/16" dia. x 1.0" lg. S.S.	18	
16		AGS784/40	Pin split 3/16" dia. x 3.0" lg. S.S.	2	

Notes: (a) Items 10 to 16 will be disposed of in accordance with current authorised procedure.

(b) Items 10, 11 and 12 are obsolete.

Method of Incorporation

5. The following sequence of operations is the method for incorporating this modification:-

(a) Remove the main wheels in accordance with Australian Air Publication 828, Section 5, paragraph 174. Retain washer and wheel nut but discard split pin (item 16).

(b) Remove the tyre and tube from the wheel. Discard Items 10 and 11, but retain the tyre provided that it is quite serviceable.

(c) Assemble tyre to new wheel (Item 2) using tube (Item 1). Inflate to 80 P.S.I.

(d) Disconnect brake hose at the elbow on the brake unit. Remove the elbow and retain.

(e) Remove 5/16" bolts securing brake unit to flange of undercarriage leg. Discard the brake unit (Item 12), bolts (Items 13 and 14) and split pins (Item 16). Retain nuts and brake line lock plate.

(f) Fit the elbow retained in paragraph (d) to the new brake unit (item 3) and assemble the brake unit to undercarriage leg so that brake line elbow is on the forward side next to the unused torque link boss. Fit the lock plate in the appropriate position so that the fork on the lock plate fits across two of the flats of the hexagonal nut on the elbow, with the elbow pointing forward and downward at an angle of approximately 20°, when the elbow coupling nut is tightened. Fit the two longer bolts (Item 5) through the brake unit, flange and lock plate and the bolts (Item 4) through the remainder of the holes.

Note: It will be found that some of the bolts have to be shortened in length.

(g) Fit nuts retained in paragraph (e), the two thinner ones being assembled to the bolts behind the bottom torque link.

(h) Drill No.51 hole through bolts (items 4 and 5) and pin with split pins (Item 6).

Note: It will be necessary to remove some of the bolts and drill on the bench.

(i) Re-couple brake hose to elbow, tighten and wirelock.

(j) Fit new wheel unit, washer and wheel nut and lock with 2 B.A. bolt, washer and nut (Items 7, 8 and 9) through split pin hole.

(k) Trim the side of the 2 B.A. washer so that it does not protrude beyond the end of the axle. This is to give the desired clearance between the end of the axle and rib 4 when wheel is retracted.

(l) Check the wheels for freedom of movement. Operate brakes and see that wheels lock. Release brakes and check again.

(m) Carry out undercarriage retraction test and observe that wheel doors lock satisfactorily.

(n) Lower undercarriage and remove trestles.

(o) Record modification in the Airframe Log Book.

Drawings

6. No drawings will be required.

Effect on Weight and Balance

7. The effect of this modification on the weight and balance of the aircraft is as follows:-

Item	Weight (lb.) ±	Arm (in.) ±	Moment (lb.) ± in.
Installation Complete	+ 31	+ 12.4	+ 384.4

Amendments to the weight sheet summary will be consolidated and issued by Air Force Head-Quarters.

References : Files R.A.A.F. 9/84/157A and 150/4/8429
D.H.Aust. Mod. V.78
A.M. Mod. VAM.842
L.M.C. Meeting No.15

Date of Issue : 16th December, 1953.

Air Force Head-Quarters

Technical Order

VAMPIRE MODIFICATION NO. 45

Application: See para. 2

Classification: 2

G.G.S. RECORDER CAMERA - ALTERATION TO ELECTRICAL CIRCUIT

Introduction

1. To correct the wiring of the Gyro Gun Sight Recorder Camera necessitates a change in the internal wiring of the main electrical junction box (J.B.1) and coding changes on two cable assemblies.

General

2. This modification is applicable to Mk. 30 Vampire aircraft which have not had equivalent maker's modification (De Havilland Modification No. VIII) incorporated.

3. This modification is to be carried out at or before the next minor inspection following receipt of modification sets and will take approximately 10 man-hours.

Supply

4. The following parts will be required to complete one modification set:-

Item No.	Ident.No.	Part No.	Nomenclature	No. off per a/c.	Stores Class.
1	G5C/1722	-	Relay Type P, No. 1	1	A
2	H128F/30504	AN931-6-10	Grommet, Rubber	1	C
3		H241-B	Terminal, 4 B.A. (alt. to Item 4)	1	C
4	-	-	Terminal, Ross Courtney (alt. to Item 3)	1	C
5	H28C/2809	AGS.249/21	Screw, Csk.Hd., Steel 4 B.A. x 3/8"	1	C
6	H28C/2833	AGS.249/25	Screw, Csk.Hd., Steel 4 B.A. x 7/8"	2	C
7	H28/10287	AGS.2001-B-1	Stiffnut, 4 B.A., Plain	2	C
8	-	-	Cable, AN.18, One Core Vin, Spec. G.107(a) or AN-JC-48(a)	As Reqd.	C

5. Items Nos. 1 to 8 inclusive will be supplied to Modification Section, No.2 A.D., in accordance with instructions issued by Air Force Head-Quarters.

Method of Incorporation

6. Remove Junction Box No. 1 from the aircraft and rework as shown on Drawings Nos. G.11754/1 and /2.

7. Disconnect the two cables at the suppressor on the cockpit floor and re-code the cables as shown on Drawing No. G.11754/1.

8. Reconnect the above cables.

9. Refit Junction Box No. 1.

10. Functionally check the Gyro Gun Sight Recorder and Camera Gun circuits.

11. Record modification in the Log Book.

Drawings

12. Drawings Nos. G.11754/1 and /2 will be forwarded to units on request.

Effect on Weight and Balance

13. The effect of the incorporation of this modification on the weight and balance of the aircraft is negligible.

References : File R.A.A.F. 150/4/8432
De Havilland Modification No. V111
L.M.C. Meeting No. 22
No. 78 (F) Wing Defect Report

Date of Issue : 12th May, 1953.

RESTRICTED

Headquarters Support Command

AMENDMENT LIST NO ~~60~~ 349

TO

AUSTRALIAN AIR PUBLICATION 721.79

VOLUME 2 PART ~~1~~ 2

VAMPIRE ~~INSTRUCTIONS~~ mods

1	Vampire Modification No 46 is to be amended by ink amendment as follows:- (a) Title Mod line 3 delete 182 appearing after STI Vampire and insert 184 (b) Para 7 After STI Vampire delete 182 and insert 184
2	When the above amendment has been incorporated, make the necessary entry in the Amendment Certificate.

Reference: File, Headquarters Support Command, 2501/110/6120

Date of Issue: 7th December 1966

RESTRICTED

Restricted

Air Force Head-Quarters

Technical Order

VAMPIRE MODIFICATION NO. 46

Application: See paragraph 2

Classification: Class 2

GENERATOR WARNING LIGHT - REVISED CIRCUIT

Introduction

1. This modification authorises a change in the generator warning light circuit to prevent the warning light burning continuously, whilst the aircraft is on the ground and the batteries are connected.

General

2. This modification is applicable to the following Vampire (Mark 30) aircraft:-

A.79-1, 2, 484, 586, 687, 973, 309, 170, 375, 24, 109, 762, 914, 876, 153, 18, 263, 529, 737, 796, 89, 650, 777, 321, 14, 165, 942, 872, 567, 333, 704.

All other aircraft will be modified by the manufacturer.

Responsibility for Incorporation

3. It is to be incorporated by units holding these aircraft at the next minor servicing inspection.

Equivalent Modification

4. The approved equivalent modification is De Havilland (Aust.) Modification No. V.141.

5. The work will take approximately eight (8) man-hours.

Supply

6. No parts will be required to incorporate this modification.

Method of Incorporation

7. This modification will be incorporated in the following sequence of operations:-

(a) Trestle the aircraft as shown in Figure 9 of Australian Air Publication 828.

(b) Remove the bottom engine cowling as shown in paragraph 144 of A.A.P. 828.

(c) Locate "Ground/Flight" switch mounted on the forward end of Rib 1 on the portside of the aircraft.

(d) Remove the bakelite guard giving access to the three terminals on the aft end of the switch.

(e) Remove the A.N.16 cable coded G.A. plus from the bottom terminal and nip it up tightly on the centre terminal.

(f) Check to see that the warning light comes on when the "Ground/Flight" switch is in the "Flight" position.

(g) Replace the bakelite guard and the bottom engine cowling. Remove trestles.

Drawings

8. Nil.

Effect on Weight and Balance

9. The incorporation of this modification does not affect the weight and balance of the aircraft.

References : Files R.A.A.F. 150/4/8433 and De Havilland (Aust.) I.L. 191.

Date of Issue : 29th October, 1953.

TJ3-

Restricted

Air Force Head-Quarters

Technical Order

VAMPIRE MODIFICATION NO. 47

Application: Vampire Mk.30 (See para.2(a))

Classification: Class 4

MICRO SWITCHES IDENT. NO. G5C/4099 - INTRODUCTION

Introduction

1. (a) This modification calls for a revised wiring system for the undercarriage warning lights and the addition of three micro switches to prevent the green lights being shown when the undercarriage is not locked down. It also introduces improved micro switches (Ident. No. G5C/4099) throughout the system in lieu of the existing micro switches (Ident. No. G5C/1789 and G5C/1975) which are obsolescent and for which no further replacements are available.

(b) This modification may be incorporated in four separate parts, viz:-

Part 'A' - Main Wheel Doors

Part 'B' - Main Undercarriage & Nosewheel complete

Part 'C' - Cabin Air Control

Part 'D' - Engine Control Box

General

2. (a) This modification has been introduced by the manufacturer on the following aircraft:-

Part 'A' - D.H.Serial No.4040 and subsequent

Part 'B' - D.H.Serial No.4047 and subsequent

Part 'C' - D.H.Serial No.4047 and subsequent

Part 'D' - D.H. Serial No. 4050 and subsequent

This modification is to be incorporated on aircraft D.H. Serial No.4001 to the aircraft mentioned above.

Note: Before this modification can be carried out on aircraft D.H. Serial No.4001 to 4004, R.A.A.F. Vampire Modification No.2 is to be incorporated and before this modification can be incorporated on aircraft D.H. Serial No.4001 to 4006, R.A.A.F. Vampire Modification No.1 is to be incorporated.

(b) The manufacturer's approved equivalent modification is D.H.Aust. Mod.V.98.

(c) This modification is to be incorporated as aircraft become due for major inspection or repair.

(d) The following special tools are required for Part 'B' only:-

Y00185A - Spanner, box, L.H.
Y00186A - Spanner, box, R.H.

(e) Man-hours

Part 'A' - approximately 15 man-hours per aircraft

Part 'B' - approximately 80 man-hours per aircraft

Part 'C' - approximately 8 man-hours per aircraft

Part 'D' - approximately 8 man-hours per aircraft

(f) The trade mustering responsibility for the incorporation of this modification is fitter IIA and electrical fitter.

Part 'A' - Main Wheel Doors

Supply

3. The following parts will be required for Part 'A' to complete one modification set:-

Item No.	Ident. No.	Part No.	Nomenclature	No. off per a/c.	Stores Class.
1		G001771A	Bracket, switch mounting, L.H.	1	C
2		G001772A	Bracket, switch mounting R.H.	1	C
3		AS1885/7B	Bolt, mushroom head, 4 BA x 1.05" long	4	C
4	H28F/5725	AS2230/405	Rivet, c's'k head, $\frac{1}{8}$" x 5/16" long, L.A.	4	C
5	H28F/62276	TAP/D/ 414BS	Rivet, tucker pop, $\frac{1}{8}$" dia.	4	C
6	G5C/4099		Switch, micro, Burgess type 4A	2	A

Note

(a) Items 1 to 6 inclusive will be delivered from De Havilland Aircraft Pty. Ltd. to Sub-Modification Section, 2 A.D. Sub-Modification Section will issue these items on demand.

Salvage

4. The following parts will be rendered redundant by the incorporation of Part 'A' of this modification:-

Item No.	Ident. No.	Part No.	Nomenclature	No. off per a/c.	Stores Class.
7		G00675A	Bracket, switch mounting, L.H.	1	
8		G00676A	Bracket, switch mounting, R.H.	1	C
9	A79/500758	G00677	Spring, door lock switch	2	C
10	H28/9342	AS1885/6B	Bolt, mushroom head, 4 BA x .95" long	4	C
11	H28F/5725	AS2230/405	Rivet, c's'k head, $\frac{1}{8}$" x 5/16" long, L.A.	4	C
12	H28F/62276	TAP/D/ 414BS	Rivet, tucker pop, $\frac{1}{8}$" dia.	4	C
13	H28C/2773	AGS247/23	Screw, cheese head, 4 BA x $\frac{5}{8}$" long	2	C
14	H28/754	A16Y/BT	Nut, 4 BA, thin	2	C
15	H28/10327	B.T.1	Nut, 4 BA, pinnacle, thin	2	C
16	G5C/1789		Switch, micro, Burgess Mk. II ABR	2	A

Note:

(a) Items 7 to 9 inclusive are to be disposed of in accordance with current authorised procedure.

(b) Items 10 to 16 inclusive will remain as current items and of these items, 10 and 13 to 16 inclusive should be examined and returned to stock if serviceable.

Method of Incorporation

5. Trestle the aircraft in accordance with A.A.P.828, Fig. 9.

6. Locate the micro switches on the main wheel doors and disconnect the cables, having first disconnected the power supply.

7. Remove micro switch from mounting bracket and discard switch (item 16), operating spring (item 9), bolts (item 10) and adjusting screws and nuts (items 13, 14 and 15).

8. Carefully drill out the rivets securing the micro switch bracket to the door and discard all items 7 or 8, 11 and 12.

9. Refer to drawing A-11759 and rivet new bracket (item 1 on port side, item 2 on starboard side) to the door, using 2 rivets (item 5).

10. Adjust bracket so that switch mounting face is inclined at 90° to the top skin of the door, spot through from rivet holes in the door using a No. 30 (.1285") drill and fit 2 rivets (item 4).

11. Fit new micro switch (item 6) to the door using bolts (item 3).

12. If this part 'A' of the modification is incorporated independently of part 'B', then connect the cables to the micro switch as follows:-

Port : Red U5 to terminal A
Blue U7 to terminal B

Starboard : Red U6 to terminal A
Blue U3 to terminal B

13. If, however, this part of the modification is carried out in conjunction with part 'B', then the following procedure is to be adopted:-

On the micro switch end of the cable, recode the leads so that on the Port side (cable Part No. N001003A), blue lead U7 becomes U2 and on the starboard side (cable Part No. N001004A), blue lead U3 becomes U4.

Remove the cable from the terminal block on rib 5 and similarly recode.

The Part Nos. of the cables alter thus:-

N001003A becomes 0CN429A
N001004A becomes 0CN430A

Assemble the cables to the micro switches as follows:-

Port : Blue U2 - terminal B
Red U5 - terminal A

Starboard : Blue U4 - terminal B
Red U6 - terminal A

14. Seal all cable entries with approved sealing compound.

15. Lash the long lead of micro switch end of cable to the micro switch bracket through the hole provided.

16. Adjust the micro switch by means of the slotted holes in the bracket so that switch plunger has a total movement of .22" when actuated by the door lock bolt.

17. Retract undercarriage and check that the new assy, does not foul the surrounding structure and that indications are received on the cockpit undercarriage position indicator in accordance with A.A.P.827, Fig.67.

18. Remove the trestles.

Part 'B' - Main Undercarriage and Nosewheel Complete

Supply

19. The following parts will be required for part 'B' to complete one modification set:-

Item No.	Ident. No.	Part No.	Nomenclature	No. off per a/c.	Stores Class.
17	A79/501812	G001747A	Swith assy, complete 'Up'	2	A
18	A79/501924	G001789	Bolt, special	8	C
19	A79/501925	G001829	Bracket, micro switch, L.H.	1	C
20	A79/501926	G001830	Bracket, micro switch, R.H.	1	C
21	A79/501930	G001847A	Bracket, micro switch	1	C
22		N002659	Cable assy, L.H.	1	C
23		N002660	Cable assy, R.H.	1	C
24		N002673A	Cable assy	1	C
25		N00427A	Cable assy	1	C
26		12-UN-81A	Carrier, micro switch	1	C
27	A79/501846	12-UN-105A	Mounting, G45 camera and SCR.695 radio	1	C
28	H28/36923	DHS.30/40	Clip	4	C
29	H28/7013	A1/1B	Bolt, hex., 4 BA x .45" long, M.S.	4	C
30	H28/7172	A1/8B	Bolt, hex, 4 BA x 1.15" long, M.S.	6	C
31	H28/7980	A1/25B	Bolt, hex, 4 BA x 2.85" long, M.S.	1	C
32		A1/28B	Bolt, hex, 4 BA x 3.15" long, M.S.	1	C
33	H28/6998	A1/1C	Bolt, hex, 2 BA x .50" long, M.S.	3	C
34	H28/7030	A1/2C	Bolt, hex, 2 BA x .60" long, M.S.	2	C
35	H38/753	A16Y/CT	Nut, 2 BA, thin, M.S.	1	C
36	H28C/2874	AGS245/15	Screw, rd.hd., 2 BA x $\frac{3}{4}$" M.S.	1	C

Supply: (cont.)

Item No.	Ident. No.	Part No.	Nomenclature	No. off per a/c.	Stores Class.
37	H28/10287	AGS2001/B1	Nut, stiff, 4 BA	12	C
38	H28/10288	AGS2001/C1	Nut, stiff, 2 BA	5	C
39	H128F/620 72	AS2229/606	Rivet, 3/16" x $\frac{3}{8}$" long, c's'k, L.A.	4	C
40	H28C/12305	SP13/B	Washer, 4 BA	14	C
41	H28C/12252	SP13/C	Washer, 2 BA	9	C
42	A79/501931	G001837	Plate, striker	1	C
43		12-U-313	Plate, switch, L.H.	1	C
44		12-U-314	Plate, switch, R.H.	1	C
45	A79/501835	12-U-315A	Lever assy. L.H.	1	C
46	A79/501838	12-U-316A	Lever assy, R.H.	1	C
47	A79/501845	12/UN-75	Link, support	1	C
48	A79/501929	12-UN-97A	Bracket, striker	1	C
49	A79/501928	12-UN-99	Bolt, striker	1	C
50	A79/501927	12-UN-101	Bracket, micro switch	1	C
51	H28/7013	A1/1B	Bolt, hex, 4 BA x .45" long, M.S.	2	C
52	H28/7669	A1/10B	Bolt, hex, 4 BA x 1.35" long, M.S.	1	C
53		A1/19B	Bolt, hex, 4 BA x 2.25" long, M.S.	1	C
54	H28/7141	A15Y/6C	Bolt, hex, 2 BA x 1.0" long, M.T.S.	1	C
55	H28/753	A16Y/CT	Nut, 2 BA, thin, M.S.	2	C
56	H28/10287	AGS2001/B1	Nut, stiff, 4 BA	2	C
57		AS455/512	Rivet, snap head, 5/32" x $\frac{3}{4}$" long, M.S.	1	C
58		AS2808/5/075	Tube, distance	1	C
59	H28C/12305	SP13/B	Washer, 4 BA	2	C
60	H28C/12252	SP13/C	Washer 2 BA	1	C
61	H128F/56054	1206	Washer, shakeproof	2	C
62	G5C/4099		Switch, Burgess, micro type 4 A	9	A
63	H28B/5032	AGS784/3	Pin, split, 1/16" x 1" long, S.S.	AR.	C
64			Wire, soft iron locking 20 SWG	AR.	C

Note: Items 17 to 41 and 62 inclusive will be delivered from De Havilland Aircraft Pty. Ltd. to Sub-Modification Section.

Items 42 to 61 inclusive will be delivered from Commonwealth Aircraft Corporation to Sub-Modification Section. Sub-Modification Section will issue these items on demand in modification sets.

Items 63 to 64 inclusive are to be drawn from unit store.

Salvage

20. The following parts will be rendered redundant by the incorporation of part 'B' of this modification:-

Item No.	Ident. No.	Part No.	Nomenclature	No. off per a/c.	Stores Class.
65	A79/501560	B0C1C31	Mounting 645 Camera and SCR.695 Radio	1	C
66	A79/500643	G0067	Spring, lock switch	1	C
67	A79/500678	G00190	Link, support	1	C
68	A79/500681	G00199	Pin, lock plate	1	C
69	A79/500731	G00362A	Plate, switch assy, R.H.	1	C
70	A79/500732	G00363A	Plate, switch assy, L.H.	1	C
71	A79/500746	G00638A	Lever, assy, R.H.	1	C
72	A79/500747	G00639A	Lever, assy, L.H.	1	C
73		G00673A	Switch assy, complete	2	A
74		G00651A	Switch and gun safety switch assy	1	A
75		N00287A	Cable	1	C
76		N00510	Block, packing	1	C
77	G5C/1975		Switch, Burgess micro Mk.2A/48	3	A
78		A1/7B	Bolt, hex, 4 BA x 1.05" long, M.S.	2	C
79	H28/753	A16Y/CT	Nut, thin, 2 BA. M.S.	1	C
80	H28C/3071	AGS160/C	Washer, 2 BA	1	C
81	H128C/56054	1206	Washer, shakeproof	2	C
82		AS455/512	Rivet, Snap head, 5/32" x $\frac{3}{4}$" long M.S.	1	C
83	H128F/30288	AS2227/606	Rivet, snap head, 3/16" x $\frac{3}{8}$" long	6	C

Note:

(a) Items 65 to 72 and 75 and 76 are to be disposed of in accordance with current authorised procedure.

(b) Items 77 to 83 will remain current items and except for items 82 and 83 which should be discarded are to be examined and if serviceable to be returned to stock.

The switch assys. items 73 and 74 are to be dismantled and the switches conditioned and returned to store.

Method of Incorporation - Main Undercarriage

21. Trestle the aircraft in accordance with A.A.P.828 Fig.9.

22. Refer A.A.P., Section 5, para.172 and remove main undercarriage legs, using special spanners A79/500013 - Y00185A and A79/50014 - Y00186A.

23. Refer drawing A11767. Drill out and discard the three rivets (item 83) in the front undercarriage diaphragm. Countersink the two bottom holes 90° to the face and fit two new rivets (item 39).

24. Locate position for micro switch bracket (item 19 on the port side and item 20 in the starboard side) and drill No.26 (.147" dia.) holes in the diaphragm. Spot back from diaphragm for top hole in micro switch bracket and drill a No.11 (.191" dia.) hole.

25. Assemble the micro switch bracket to the diaphragm using 1 bolt, nut and washer (items 33, 38 and 41) in top hole and 2 off each of items 29, 37 and 40 in bottom holes.

26. Fit micro switch (item 62) to bracket using bolts (item 30) washers (item 40) and nuts (item 37).

27 Fit the cable (item 22 in port side and item 23 in starboard side) and clip to the diaphragm in accordance with drawing using two clips (item 28) which are to be secured to the diaphragm with the existing bolts holding the micro switch bracket and the undercarriage jack hose clip.

28. Attach the cable to the micro switch as follows:-

Port side	:	Red U13 - terminal A Green U5 - terminal B Blue U7 - terminal E
Starboard side	:	Red U15 - terminal A Green U6 - terminal B Blue U3 - terminal E

29. Seal all cable entries with approved sealing compound.

30. Pass the other end of the cable through the teleflex conduit hole in rib 3 and thence to the terminal blocks on the rear wall of the wheel well. Connect the cable in accordance with the wiring diagram.

31. After replacing the leg (see para.58), adjust the micro switch so that when undercarriage leg is fully down, the switch plunger is depressed .05" min. to .08" max.

32. Refer A.A.P. 828, Fig.23 and locate the micro switch 'E' on the radius rod.

33. Trace the cable from the micro switch to the terminal blocks in the wheel well and disconnect the cable.

34. Unscrew the two 4 BA bolts (retain bolts and nuts) and discard micro switch item 77. Disconnect and retain the cable complete with clip.

35. Remove the split-pin from the lever pivot pin and remove the switch operating lever and washer.

36. Remove the adjusting screw from the micro switch operating lever, removed in para.35 and fit to the new lever (item 45, port or item 46 starboard). Discard the old levers (items 71 and 72).

37. Break lock wire and remove screw and pivot pin securing the switch mounting plate to the radius rod. Discard mounting plate (item 70, port side and item 69 starboard side).

38. Refer drawing A11760 and assemble the new plate (item 43 port side or item 44 starboard side) to the radius rod using the screw and pivot pin retained in para. 37. Wirelock together with locking wire (item 64).

39. Fit the new lever assembly (para.36) using the 3/16" washer retained in para.35 and a new split pin (item 63).

40. Rework the micro switch cable removed in para.34 as follows:-

Port side cable (Part No. N00292A)

Cut back each end of the yellow cable to the sleeve. Recode blue cable U2 to U13. Alter cable Part No. to 00N433A.

Starboard side cable (Part No. N00310A)

Cut back each end of the yellow cable to the sleeve. Recode blue cable U4 to read U15. Alter cable Part No. to 00N434A.

41. Assemble the reworked cables to the new micro switches item 62 as follows:-

Port side cable (Part No. 00N433A)

Red U4 to terminal A
Green U5 to terminal B
Blue U13 to terminal E

Starboard side cable (Part No. 00N434A)

Red U4 to terminal A
Green U6 to terminal B
Blue U15 to terminal E

Seal all the cable entries with approved sealing compound.

42. Assemble the micro switches to the mounting plates on the respective radius rods. Using the bolts and nuts retained in para. 34 and assemble the cable clip under the lead of the appropriate bolt.

43. Pass the cable through the hole in the radius rod casting and up and over the top of the radius rod along the underside of the top skin and finally connect to the terminal blocks in wheel well in accordance with wiring diagram.

44. Adjust the operation of the micro switch in accordance with A.A.P.828, Fig. 23.

45. Refer A.A.P.828, Figure 57 and locate the micro switch 'N' positioned on the undersurface of the top skin.

46. Remove inspection panel in top skin near micro switch and remove the switch assembly from the skin mounting bracket by withdrawing two 4 BA bolts.

47. Disconnect the cable from the micro switch.

48. Refit the bolts through the micro switch so as to make a complete assembly as was installed on the wing and discard item 73.

49. Trace the cable through to the terminal blocks in the wheel well, disconnect and rework each end as follows:-

Port Side Cable (Part No. N001007A)

Cut green cable back to the sleeve.
Recode blue cable U13 to read U11.
Alter cable Part No. to 00N435A.

Starboard Side Cable (Part No. N001008A)

Cut green cable back to the sleeve.
Recode blue cable U15 to read U11.
Alter cable Part No. to 00N436A.

50. Connect cables to the new 'Up' switch assembly (item 17) in the following manner:-

Port Side Cable (Part No. 00N435A)

Red U5 to terminal A
Blue U11 to terminal E

Starboard Side Cable (Part No. 00N436A)

Red U6 to terminal A
Blue U11 to terminal E

51. Seal all cable entries with approved sealing compound.

52. Assemble new switch assembly to the mounting bracket on the skin using 4 bolts (item 18) in each side.

53. Connect the cable to the terminal block in accordance with the wiring diagram.

54. Locate the terminal block on rib 6 and from it the cable that goes to the terminal blocks in the rear wall of the wheel well.

55. Disconnect each end and modify as follows:-

Port Side Cable (Part No. N001005A)

Recode blue cable U7 to read U2.
Alter cable part No. to 00N431A.

Starboard Side Cable (Part No. N001006A)

Recode blue cable U3 to read U4.
Alter cable part No. to N00432A.

56. Reconnect the terminal blocks in accordance with wiring diagram.

57. Check all connections for continuity.

58. Reassemble undercarriage legs to wing, reversing procedure detailed in A.A.P.828, para.172 and adjust in accordance with A.A.P.828, para. 95-100. Use split pins (item 63) where required.

Nosewheel

59. Remove the detachable nose and the fixed nose fairing.

60. Remove SCR.695 radio and G45 camera (or ballast in lieu) from the nose compartment.

61. Unbolt the nose wheel mudguard, lay back and lash to the nose wheel top structure so as not to damage electrical connections. Retain all parts.

62. Remove the three micro switches from the underside of the radio and camera mounting structure. Disconnect the cables and reassemble the three switches using the same bolts and discard as a complete assy. (item 74). Also discard packing (item 76).

63. Remove radio and camera mounting structure. Retain all attachments.

64. Remove SCR. Radio mounting tray from the mounting structure. Discard the mounting structure (item 65) but retain all other items.

65. Assemble the mounting tray to the new structure (item 27) using the parts retained in para. 64.

66. Refer A.A.P.828 Fig. 56 and locate the micro switch 'E' on the radius rod. Disconnect the cable.

67. Follow the micro switch cable through to the terminal blocks on front armour plate and disconnect.

68. Rework each end of the micro switch cable (Part No. N00286A) as follows:-

Cut back yellow cable to sleeve.
Recode blue cable U8 to read U14.
Alter cable Part No. to 00N425A.

69. Remove micro switch and discard item 77. Also discard the operating spring (item 66), the two bolts (item 78) and the shakeproof washer (item 81).

70. Locate switch operating pin 'G' on fig. 56 on the lock plate and remove. Discard the pin (item 68), washer (item 80) and nut (item 79).

71. Refer drawing A-11762 and carefully drill out 5/32" dia. steel rivet located next to the hole vacated by pin, removed in para. 70, towards the upper end of the lock plate. Discard the rivet (item 82).

72. In accordance with drawing, fit new striker bracket (item 48) to lock plate using bolt (item 54), nut (item 55) and washer (item 60) through old pin hold.

73. Spot through from rivet hole into new bracket with 5/32" dia. drill and fit new rivet (item 57).

74. Dress off surplus length of bolt and rivet over to lock.

75. Assemble striker bolt (item 49) to bracket and fit lock nut (item 55).

76. Assemble new micro switch bracket (item 50) to radius rod with 2 bolts (item 51) fitted in the holes previously used to retain old micro switch. Fit shakeproof washer (item 61) under the heads of the bolts.

77. Using No.26 (.147" dia.) drill, spot through from the hold in the bracket nearest lock plate, into the radius rod casting. Drill right through casting.

78. Connect the reworked cable to the micro switch in the following manner:-

Red U4 to terminal A
Green U10 to terminal B
Blue U14 to terminal E

Seal all the cable entries with approved sealing compound.

79. Connect the other end of the cable to the terminal blocks in accordance with wiring diagram.

80. Assemble the new micro switch (item 62) to the bracket on the radius rod using one bolt (item 53) through hole nearest lock plate with distance tube (item 58) fitted between bracket and casting. Tighten up using nut (item 56) and washer (item 59).

81. Assemble bolt (item 52) through the other hole with 'P' clip on cable fitted under the lead. Tighten, using nut (item 56) and washer (item 59).

82. Adjust the micro switch in a manner similar to that detailed in A.A.P.828, Fig.23.

83. Having carried out the modification to the radius rod the following part nos. will change (Refer A.A.P.828, Fig.56):-

Item C: Lock Plate A79/500677 G00185A to
A79/501842 G00185A/1

Item D: Upper Link G00184 to G001809 (No. Ident. Nos.)

Radius Rod assy. Complete, A79/500800 G001097 to
A79/501843 12-UN-93A

84. On the top of the nosewheel leg, locate the four bolts situated symmetrically about the large slotted nut.

85. Break locking wire and remove the two aft bolts.

86. Fit striker plate (item 42) and reassemble bolts - wirelock (item 64).

87. Refer A.A.P.828, Fig.54 and locate support link 'O'.

88. Remove support link and discard item 67. Retain all other parts.

89. Fit new support link (item 47) using parts removed in para.88. Pin as necessary with split pin (item 63).

90. Having carried out the above modification to the nosewheel assy., the part no. changes thus:-

A79/500801 G001098A/1, Assy. of Nosewheel becomes
A79/501844 12-UN-107A

91. Refer drawing A-11761 and assemble new radio and camera mounting structure complete with radio mounting tray fitted in para.65 to nose compartment in a manner similar to old assembly. Use all bolts, nuts etc. retained in para. 63. Assemble the new micro switch bracket (item 21) at the forward end picking up with bracing tubes under the heads of bolts with additional bolt and nut (items 33 and 38) fitted in the top hole and 3 washers (item 41) fitted under each nut.

92. Select new micro switch (item 62) and connect up new cable (item 24) in the following manner:-

Red U14 to terminal A
Blue U9 to terminal E
Green U10 to terminal B

Seal all cable entries with approved sealing compound.

93. Connect new micro switch to bracket using 2 bolts (item 30), nuts (item 37) and washers (item 40).

94. Adjust micro switch so that when the leg is fully down, the switch plunger is depressed .05" min. to .08" max.

95. Assemble the new micro switch carrier (item 26) to the micro switch bracket on the radio and camera mounting structure in accordance with drawing 0CM210 sheet no. 5 using 2 bolts (item 34), nuts (item 38) and 4 washers (item 41).

96. Follow micro switch cables, removed in para.62, through to terminal blocks in front armour plate and disconnect.

97. Locate cable (item 75) coded red U11, green U10, white U10, yellow U14 and blue U9 and discard.

98. Connect new cable item 25 to new micro switch in the following manner :

Green U10 to terminal A
Yellow U11 to terminal E

Select a second new micro switch (item 62) and connect the other two cores of the cable as follows:-

Red U10 to terminal A
Blue U8 to terminal B

Seal all cable entries with approved sealing compound.

99. Connect the other end of the cable to terminal blocks on front armour plate in accordance with wiring diagram.

100. Connect the existing two core cable to a third new micro switch (item 62) in the following manner:-

Core GF10 to terminal E
Core GF 5 to terminal A

101. Connect this cable to terminal blocks in accordance with wiring diagram.

102. Assemble the three new micro switches together on the new bracket on the radio and camera mounting structure as shown on drawing A-11761 using 1 bolt (item 32), 1 bolt (item 31), two nuts (item 37) and 4 washers (item 40).

103. Fit on the top of the mounting bracket the adjusting screw (item 36) and lock nut (item 35) in the nut, welded on the bracket.

104. Check all connections for continuity.

105. Retract undercarriage and adjust all micro switches on main undercarriage and nosewheel so that the following indications are received on the cockpit indicator:-

Wheel locked down - green lights.
Wheels between down and up - red lights.
Wheels locked up but doors not locked - red lights.
Wheels locked up and doors locked - no lights.
Wheels locked up but throttle less than $\frac{1}{4}$ open -
Undercarriage warning light and horn.

106. Re lash cables in nose compartment to convenient parts on structure.

107. Replace inspection panel in top wing skin removed in para.46.

108. Modify nose wheel mudguard by incorporating 1.0" dia. hole in accordance with drawing A-11761; Part No. of nose wheel mudguard altered from B00933A to 12-UN-91A - A79/501847.

109. Replace nose wheel mudguard with original attachments (para.61).

110. Replace SCR.695 radio and 645 camera or ballast using part retained in para. 60.

111. Refit fixed nose fairing and detachable nose and touch up paint work.

112. Remove trestles.

Part 'C' - Cabin Air Control

Supply

113. The following parts are required for part 'C' to complete one modification set:-

Item No.	Ident. No.	Part No.	Nomenclature	No. off per a/c.	Stores Class.
84	G5C/4099		Switch, micro, Burgess type 4A	1	A
85		0CR139A	Lever, assy.	1	C
86		0CN449	Block, packing	1	C
87	H28/10327	AGS2002/B1	Nut, stiff, 4 BA, M.S.	2	C

Note: Items 84 to 87 inclusive will be delivered from De Havilland Aircraft Pty.Ltd., to Sub-Modification Section. Sub-Modification Section will issue these items on demand.

Salvage

114. The following parts will be rendered redundant by the incorporation of part 'C' of this modification:-

Item No.	Ident. No.	Part No.	Nomenclature	No. off per a/c.	Stores Class.
88	G5C/1789		Switch, micro, Burgess Mk.11 ABR	1	A
89		R00411A	Lever assy.	1	C
90		0CN231	Block, packing	1	C
91		0CN227	Spring	1	C
92	H28/10327	B.T.1	Nut, pinnacle, 4 BA, M.S.	2	C

Note: (a) Items 89 to 91 inclusive are to be disposed of in accordance with current authorised procedure.

(b) Items 88 and 92 are to be examined and if serviceable to be returned to stock.

Method of Incorporation

115. Refer A.A.P.828, Fig.5 and Fig.42 and locate the Air Cooler Valve at the Starboard side inside the cabin.

116. Disconnect the two clips securing the hot air supply pipe to the valve and retain all attachments.

Disconnect the electric cables from the micro switch.

117. Disconnect the bolts securing the air cooler to the frame at the Starboard outboard side of the cabin and retain all attachments.

118. Remove the air cooler complete with air cooler valve.

119. Disconnect the aerotight nut holding the control lever assembly to the air cooler valve. Remove and discard the control lever assembly (item 89). Retain the aerotight nut.

120. Disconnect the two 4 BA bolts securing the old micro switch to the micro switch bracket. Remove and discard the micro switch (item 88) the packing block (item 90), the spring (item 91) and the two nuts (item 92). Retain the two bolts.

121. Assemble the new micro switch (item 84) and the new packing block (item 86) to the micro switch bracket in a way similar to the original assembly, using the bolts (retained in para. 120) and the two new nuts (item 87).

122. Assemble the new control lever (item 85) to the valve and attach with the aerotight nut retained in para.119.

123. Adjust the micro switch plunger so that when the control lever is fully in the 'Off' position, the micro switch plunger is depressed .05" min. to .08" max.

124. Replace the air cooler with the attachment retained in para.117.

125. Connect the existing cable to the new micro switch in the following manner:-

Red cable FA1 to terminal A
Blue cable FA2 to terminal D

126. Attach the hot air supply pipe to the valve using the attachments retained in para. 115.

127. Refer A.A.P.828, Fig.7. Locate the fire extinguisher bottle. Disconnect the socket from the fire extinguisher bottle and connect to a filament. Function the fire extinguisher circuit to check correct functioning of micro switch.

Part 'D' - Engine Control Box

Supply

128. The following parts will be required for part 'D' to complete one modification set:-

Item No.	Ident. No.	Part No.	Nomenclature	No. off per a/c.	Stores Class.
93	A79/501849	00I229A	Lever, selector, undercarriage	1	C
94		00N451A	Switch, micro assy.	1	A
95		00L215A	Bracket, micro switch	1	C
96	H28/10287	AGS2001/ B1	Nut, stiff, 4 BA	3	C
97	A79/501932	00L213A	Lever, actuating	1	C
98	H28/7650	A1/9B	Bolt, 4 BA x 1.25" lg.	1	C
99	H28C/2868	AGS245/14	Bolt, $\frac{5}{8}$" long	2	C
100		00L301ND	Washer, packing	2	C
101	H28/10288	AGS2001/C1	Nut, stiff, 2 BA	2	C

Note: Items 93 to 101 inclusive will be delivered from De Havilland Aircraft Pty. Ltd. to Sub-Modification Section. Sub-Modification Section will issue these items on demand.

Salvage

129. The following parts will be rendered redundant by the incorporation of part 'D' of this modification:-

Item No.	Ident. No.	Part No.	Nomenclature	No. off per a/c.	Stores Class.
102	A79/500890	L001371A	Lever, selector, undercarriage	1	C
103	H28C/2862	AGS245/13	Bolt, $\frac{1}{2}$" long	2	C
104	H28/10288	C.P.I.	Nut, pinnacle	2	C
105		N00267	Switch, micro assy.	1	A
106	H28/10287	B.A.1	Nut, aerotight	2	C
107	H28/5315	A16Y/BP	Nut, 4 BA	2	C
108		L00336	Spring	1	C

Note: Items 102, 105 and 108 will be disposed of in accordance with current authorised procedure; the switch assembly is to be dismantled and the switches conditioned and returned to store. Items 103, 104, 106 and 107 are to be examined and if serviceable, to be returned to stock.

Method of Incorporation

130. Refer A.A.P.828, Fig.2 and locate the undercarriage selector lever on the engine control box.

131. Disconnect the lever from the undercarriage selector lever boss and retain the c's'k bolt and the thin nut. Remove the undercarriage lever assembly.

132. Disconnect the knob from the lever assembly and retain the knob with attachments. Also remove and retain the contact stud. Discard the undercarriage lever (item 102)

133. Disconnect the micro switch cable.

134. Disconnect the two bolts holding the micro switch bracket to the engine control box. Discard the two bolts and nuts (items 103 and 104) also the bracket (item 100A)

135. Remove the micro switch cable assembly from the bracket and discard micro switch cable assy. (item 105). Also discard the ~~four rivets (items 14 and 15)~~ and the spring (item 108). Retain the bolts and washers.

136. Assemble the knob and the contact stud retained in para. 132 to the new undercarriage lever (item 93)

137. Fit the new micro switch cable assembly (item 94) to the new micro switch bracket (item 95) using the bolts and washers retained in para. 135 and two new nuts (item 96).

138. Connect the actuating lever (item 97) to the micro switch bracket using bolt (item 98) and stiff nut (item 96). Allow to pivot.

139. Fit the assembled micro switch bracket to the engine control box, using two bolts (item 99) through the original holes in the control box. Fit washers (item 90) between the bracket and the control box, and lock the bolts with nuts (item 91).

140. Fit the new undercarriage lever in the place of the old one and attach with the original bolt and nut previously removed (para.131).

141. Connect the new cable similar to the one removed.

142. Refer A.A.P.828, para.269 and adjust the micro switch so that the depression will be .05" min. to .08" max.

143. Trestle the aircraft and retract the undercarriage to check functioning.

144. Remove trestles.

145. Record the modification (part 'A' to 'D' inclusive) in the Airframe Log Book and Part 'A' and 'B' on the wing mod. plate.

Drawings

146. Drawings A11759, A11760, A11761, A11762, A11767, A11764 Sheets 1 and 2 will be forwarded to user units on request.

Effect on Weight and Balance

147. The effect of the incorporation of this modification on the weight and balance of the aircraft is negligible.

References : File R.A.A.F. 150/4/8434
D.H.Aust.I.L.210
D.H.Aust.Dwgs. OCM210 Sheets 1 to 7
D.H.Aust.Mod. V98
A.M.Aust.Mod. VAM.809
A.M.Aust.Mod. VAM.810
L.M.C. Meeting No.22

Date of Issue : 15th June, 1953.

Restricted

Air Force Head-Quarters

Technical Order

VAMPIRE MOD. NO.48

Application: "All Aircraft."

Classification: Class 4 AL11

INSTALLATION OF DIMMING RESISTORS FOR NAVIGATIONAL LIGHTING

Introduction

1. This order calls for the installation of voltage dropping resistors in the navigation light circuit, so that the light intensity may be reduced when flying in close formation during night operation. This is necessary to avoid glare which is tiring, and which can be of possible danger.

General

2. The work is electrical and is to be carried out at the next major servicing or at the next occasion junction box JB1 is removed from the aircraft, which ever is the sooner. The work should take about twenty man-hours.

Supply

3. The following items are required to modify one aircraft:-

Item No.	Ident. No.	Part No.	Nomenclature	Class.	Qty.
1	G5E/30155	SAA U1	Cable, Elec.LT AN.18	C	2 yd.
2	I1/9		Aluminium Sheet, 20G.	C	$8\frac{1}{2}$" x $5\frac{1}{2}$"
3	G5F/20082		Sheet, Insulating Laminated Bakelite	C	$\frac{5}{8}$" x 8"
4	H28/5851	AGS 2001-C -1	Nuts, Self-Locking 2BA	C	4 only
5	H28/2886	AGS 245-17	Screws, Steel R.H. 2BA x 1"	C	2 only
6	H28/35788	AGS 245-20	Screws, Steel C.S. 2BA x 2"	C	2 only
7	H28/2875	AGS 244-23	Screws, Steel R.H. 4BA x $\frac{3}{4}$"	C	2 only
8	G105C/8222	D381-15	Resistor, 15 ohm. 20 watt	A	4 only
9	H128F/30502	B825/8	Grommet, Rubber $\frac{1}{2}$" I.D.	C	2 only
10	H28/5233	A14-BB	Nut, Brass 4 BA 2 Thin	C	4 only

4. The above items will be supplied to Sub-modification Section, No.2 AD and will be automatically supplied therefrom to units holding aircraft affected.

Method of Incorporation

5. Using items 2 to 10 inclusive, make the resistance unit shown in the drawing supplied.

6. Remove the junction box JB1 from the aircraft, and mount the resistance unit on the underside of the junction box as shown. Cut screws to length where necessary.

7. Wire the resistance unit into the navigation lighting circuit in accordance with the wiring diagram. This calls for the use of the spare circuit breaker on the top right of the junction box to be wired in parallel with the resistance unit.

8. Mark the circuit breaker (paragraph 7) "NAV.LTS" and "BRIGHT" - "DIM".

9. Re-install the junction box, and test for operation.

Drawings

10. Drawings A11670, /1, /2, /3 and /4 will be supplied to aircraft depots, R.T.O. De H., and all units holding Vampire aircraft.

Effect on Weight and Balance

11. The effect of the incorporation of this modification on the weight and balance of the aircraft is negligible.

Reference : File R.A.A.F. 150/4/8435

Date of Issue : 29th May, 1953.

Air Force Head-Quarters

Technical Order

VAMPIRE MODIFICATION NO.49
(Issue 2)

Application: All Vampire/Nene Aircraft

Classification: Class 2

RELIGHT BUTTON ON H.P. COCK - INSTALLATION

Introduction

1. This order calls for installation of a relight button on the operating handle of the high pressure cock. This is necessary to enable the pilot to carry out engine relighting in flight, while retaining hold of the control column, with the right hand.

2. The original relight button mounted on main electrical junction box, on the right of the cockpit, is retained.

General

3. N This modification is to be carried out on all Vampire aircraft with nene engines, and owing to the greater pilot safety provided, is to be installed immediately parts become available, and flying commitments permit. Some preparation is to be made before receipt of modification kit (See paragraph 6).

4. The rework of the H.P. cock operating handle and mounting of the relay is to be undertaken by airframe personnel, otherwise the work is of an electrical nature, and should take a total of about 25 man-hours.

Supply

5. The following parts are required to modify one aircraft:-

Item No.	Ident. No.	Part No.	Nomenclature	Class	Qty.
1	G50/4187	Smith Pt.No.11SW	Button Push Single Way	A	1 only
2	G50/3942	S.I.S. 5476	Relay Type S No.1 Double Pole Change over	A	1 only
3	G5F/30155	SAA UI	Cable Elec.LT AA18 One Core Vin.	C	5 yards
4	G5E/30161	SAA UI	Cable Elec.LT AA16 One Core Vin.	C	16 yards
5	G5E/30599	G154	Braided Tinned Copper Flex	C	1 ft.
6	H128F/30502	B825/8	Grommet ½" I.D.	C	2 only

Item No.	Ident. No.	Part No.	Nomenclature	Class	Qty.
7	G5A/1493	AGS 1600A	Cable Ends Eye Type 2 B.A.	C	3 only
8	H28C/2856	AGS/245/12	Screws Steel R.H.2 B.A x $\frac{3}{8}$"	C	2 only
9	H128F/30520	AGS/160/C	Washer Steel 2 B.A. Plain	C	3 only
10	I1/2328		Steel Commercial bar flat 3/16" x 1"	C	9 inch
11	I1/8728		Steel Carbon Tubing $\frac{7}{8}$" O.D. x 18G	C	3 inch
12	I1/2406		Steel, Commercial Tube $\frac{1}{2}$" O.D. x 22G	C	1 inch
13	H128F/2654	B301-B4-4	Screw Steel Self Tapping No.4 x $\frac{1}{4}$" long	C	1
14	H28/26078	DHS103/2	Ferrule attachment 2 BA	C	2
15	H28C/2766	AGS 247/13	Screw Mild Steel 2 BA x $\frac{1}{2}$" CH	C	1
16	G5F/20057		Tubing Insulating 4 mm	C	3 feet
17	G5F/20058		Tubing Insulating 5 mm	C	3 feet
18	I1/832		Steel Mild Sheet 20 G.	C	12"
19	H128F/31375	2W23-A10	Washer, lock internal teeth No.10	C	2
20	H128F/5319	B311-B7-6	Screw, steel, self tapping type Z No.7 x 3/18"	C	1
21	G5F/20062		Tubing insulating flexible 9 mm.	C	5 yard

6. Items 10, 11, 12 and 18 on receipt of this order are to be obtained from unit stores to enable unit fabricated parts to be made up prior to the receipt of modification sets.

6A. Where difficulty in supply of any of the four I group items is experienced, the unit engineer officer may authorise the use of a suitable alternative.

6B. Items 1 to 9, 13 to 17 and 19 to 21 inclusive are to be supplied by the Master Modification Centre No.1 Aircraft Depot as directed by the Controller of Equipment and automatically supplied to units holding the aircraft affected.

7. The following item will be rendered redundant by this modification, and being of no further value may be disposed of, as scrap:-

D.H. Part L00319 Knob Lever H.P. Cock No.1

Method of Incorporation

8. Using items 10, 11 and 12, make up the extension handle for the H.P. Pressure cock control level in accordance with the drawing A.11677/1 supplied.

9. To this handle fit push button (item 1) then using screw and washer (items 9 and 15) mount the assembly on the H.P. cock control lever as shown in drawing A.11677-2. Discard the present lever knob D.H. Pt. No. L00319.

10. Using steel sheet (item 18) and screw (item 13) make up supporting bracket for relay to drawing A11677/3.

11. Cut the port side cockpit wall to a minimum width and depth at the two positions shown in drawing A11677 to accommodate the two wooden 2BA ferrule attachments (item 14). This is for the purpose of mounting the relay supporting bracket A11677/3. Using Beetle cement and brass brads, fix these ferrules at the position prepared.

12. Mount the relay (item 2) on the supporting bracket and install the assembly in the aircraft.

13. Study the wiring diagram A11677/5, and then run four AN16 cables (item 4) and one AN18 one core vin cable (item 3) sleeved with item 21 from the existing relight button on Junction Box 1 aft along the starboard cockpit wall, then down and along the bulkhead, behind pilot's position, to lower port side wall. Run up port side wall to relay and enter aft side of relay mounting bracket by means of grommet (item 6).

14. Run two single cored AN18 cables from relay to relight button on HP cock by routing through grommet on rear side of relay mounting bracket and then forward to point close to HP cock lever pivot point. Run cable up H.P cock extension handle and terminate in press button. Bind these cables to the extension handle with varnished tape, as shown on Drawing No.A11677-2 and bind over with twine at the extremities. Fit screw (item No.20) immediately behind switch as shown.

15. Using steel sheet (item 18) make up new bracket for port side U/V lamp to drawing A11677/4. ISSUE 2 Install this bracket in place of existing bracket.

AL 15

16. Connect and fit all cables, as necessary, by approved methods, and ensure that neither throttle, or pressure cock, handles foul new cable running to relight button on extension handle. Safety the screw securing the extension handle with locking wire.

17. Check the installation for continuity, insulation and correctness of connection. Ensure that priming pump and boost coil relay on rib 1 port side will close when either relight button is operated.

Drawings

18. The following drawings will be supplied separately to aircraft depots and units operating Vampire aircraft - A.11677 (Issue 2), A.11677/1, A.11677/2, A.11677/3, A11677/4 (Issue 2) and A11677/5 (Issue 2).

Effect on Weight and Balance

19. Amendments to Weight Sheet Summaries will be consolidated and issued by Air Force Head-Quarters.

20. The effect of the incorporation of this modification on the weight and balance of the aircraft is as follows:-

FIXED EQUIPMENT

Item	Weight (lb.) ±	Arm. (in.) ±	Moment (lb.in.) ±
Extension handle etc.	+ 3	-61.4	-184

References : Files R.A.A.F. 150/4/8441 and 9/84/36

Date of Issue : 19th February, 1954.

B3C

Restricted

Air Force Head-Quarters

Technical Order

VAMPIRE MODIFICATION NO. 50

Application: Vampire Mk.31 (See para.2)

Classification: Class 2.

G3F GYRO MAGNETIC COMPASS MONITORING CURRENT ISOLATING SWITCH - INTRODUCTION

Introduction

1. The G3 Gyro Magnetic Compass as fitted to Mk.31 Vampire Aircraft, cannot, in the present installation, be used as a directional gyro. This modification is planned to remedy that shortcoming. The instrument itself allows for this facility, and by including a simple current isolation switch in the Vampire Compass circuit, a means of using the Compass as a directional gyro will be provided.

General

2. This modification is applicable to 25 Vampire Mk.31 aircraft not having incorporated De Havillands (Aust.) modification V175.

The modification is to be incorporated as follows:-

(a) Aircraft-in-use : As early as possible, but not later than the next minor inspection.

(b) Aircraft undergoing repair or inspection : During such repair or inspection.

(c) No special tools are required.

(d) The work will take approximately six man-hours per aircraft.

(e) The trade musterings responsible for this modification are Electrical Fitter and Airframe Fitter.

Supply

3. The following parts will be required to complete one modification set :-

Item No.	Ident.No.	Part No.	Nomenclature	No. off per a/c.	Stores Class.
1	G5C/12660		Switch, type D.135	1	A
2		0CN593	Plate, switch mounting	1	C
3	H28C/2863	AGS/245-22	Screw M.S. r.h 4BA x ½"	2	C
4	H28/10287	AGS/2001/ B1	Nut, stiff, 4 BA	2	C

Item No.	Ident.No.	Part No.	Nomenclature	No. off per a/c.	Stores Class.
5	H28C/12305	SP13/B	Washer, 4 BA	2	C
6	H28C/2862		Screw M.S r.h 2BA x $\frac{1}{2}$"	4	C
7	H28/10288	AGS/2001/C1	Nut, stiff, 2 BA	4	C
8	H28C/12252	SP13/C	Washer	4	C
9	G6B/500124	HC500-6	Cable	1	C

Note: Items 1-9 inclusive will be delivered to the Modification Section, No. 2 Aircraft Depot. The Modification Section will assemble the components into modification sets for which units will demand.

Salvage

4. The following items will be rendered redundant by the incorporation of this modification:-

Item No.	Ident.No.	Part No.	Nomenclature	No. off per a/c.	Stores Class.
10		00B27	Plate, blanking	1	C
11	H28C/2868	AGS.245/14	Bolt, 2 BA	4	C
12	H28/10288	CP1	Nut, 2 BA, Simmonds	4	C
13	H28C/3071	AGS.160/C	Washer	4	C

Note: Items 11-13 inclusive are to be examined and if serviceable they are to be returned to stores as [illegible]. Item 10 is to be disposed of in accordance with current authorised procedure.

Method of Incorporation

5. Locate and remove the blanking plate on the top centre instrument panel, just above the fuel pressure warning light. Discard the blanking plate (item 10), and 4 bolts (item 11) and the 4 nuts and washers (items 12 and 13).

6. Fit the new switch (item 1) to its mounting plate (item 2) using attaching parts (items 3 to 5). Take care that the switch toggle points downwards when in the "on" position.

7. Attach the switch, together with its mounting plate in lieu of the removed blanking plate using attaching parts (items 6 to 8). Access to the rear face of the instrument panel is to be obtained through the armour door in Bulkhead No.1.

8. Connect the terminal end of the new cable (item 9) to the switch. Run the cable together with the gyro unit cable, along the starboard fuselage side and Bulkhead No.2 and whip to the existing cable run.

9. Connect the socket end of the cable to the G3F amplifier (plug reference AM6).

10. Check the switch for correct functioning.

11. Record the modification in the Airframe Log Book.

Drawings

12. No drawings will be required for the incorporation of this modification

Effect on Weight and Balance

13. The effect of the incorporation of this modification on the weight and balance of the aircraft is negligible.

References : Files R.A.A.F. 9/84/203 and 150/4/8493
D.H.Aust. Mod. V.175

Date of Issue : 10th April, 1953.

TJ 3

Restricted

Air Force Head-Quarters

Technical Order

VAMPIRE MODIFICATION NO. 51

Application: Vampire Mk. 30 see para. 2.

Classification: Class 2

PORT INNER BLAST TUBE FLANGE - REWORKING

Introduction

1. To ease the removal of the port detachable nose panel by increasing the distance between the nose wheel forward hinge and the blast tube, reworking of the flange on the flared end of the port inner blast tube has been introduced.

General

2. This modification is applicable to thirty six (36) Vampire Mark 30 aircraft not incorporating the approved equivalent modification' (De Havilland (Aust.) Modification No. V151.)

3. This modification is to be incorporated as follows:-

(a) Aircraft-in-use : Not later than next minor inspection.

(b) Aircraft undergoing repair or inspection : During such repair or inspection.

(c) No special tools are required.

(d) Man-hours: Approximately 1½ man-hours per aircraft.

(e) The trade mustering responsibility for this modification is airframe fitter.

Supply

4. No parts will be required to incorporate this modification.

Salvage

5. No parts will be rendered redundant by the incorporation of this modification.

Method of Incorporation

6. Disconnect and remove the port side detachable nose panel.

7. Refer drawing No. A11772. Rework the flange on the flared end of the port inner blast tube by dressing back as shown in drawing, applying heat to the area of rework as required.

8. Reinstal the detachable nose panel using the existing fasteners.

9. Record the modification in airframe log book.

Drawings

10. Drawings No. A11772 attached.

Effect on Weight and Balance

11. The incorporation of this modification has no effect on the weight and balance of the aircraft.

References : Files R.A.A.F. 9/84/452 and 150/4/8505
78 Wing Defect Report V44/51
L.M.C. Meeting 29.
D.H. Aust. I.L.198
D.H. Aust. Mod. V151.

Attachment : Drawing A11772

Date of Issue : 13th April, 1953.

DO NOT SCALE

ISSUE NO.	DATE	ALTERATION	D. I. L.	INITIALS	APPROVED
1					

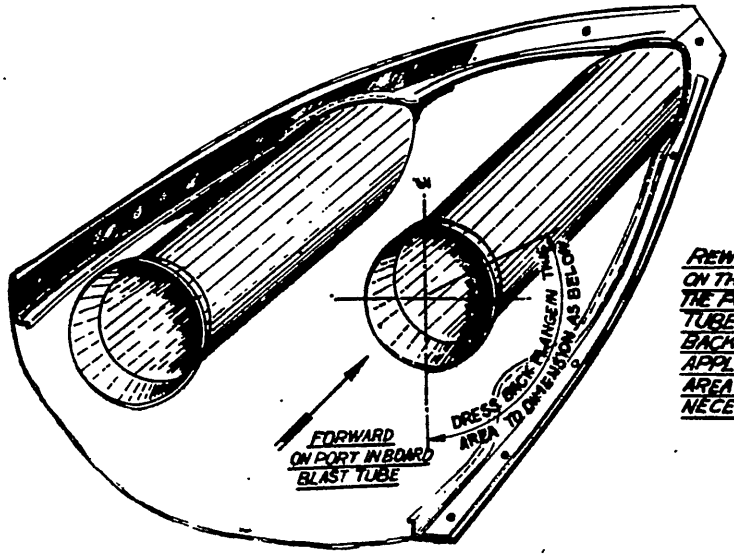

REWORK THE FLANGE ON THE FLARED END OF THE PORT INNER BLAST TUBE BY DRESSING BACK AS SHOWN APPLYING HEAT TO THE AREA OF REWORK IF NECESSARY

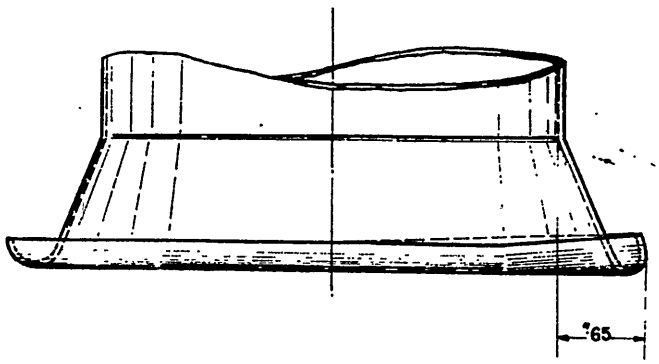

DE HAVILLAND DRG. Nº 00M 198

REFERENCE	ISSUED BY	TITLE
	DIRECTORATE OF TECHNICAL SERVICES R.A.A.F.	PORT INNER BLAST TUBE FLANGE - REWORKING

LIMITS UNLESS STATED		MATERIAL		COMPONENT OF	FUSELAGE
DECIMALS	± .010"	SPEC.		MACHINE	VAMPIRE MK. 30
FRACTIONS	± 1/32"	TREATMENT		ENGINE	GHOST NENE - 2 VH
ANGLES	± ½°	FINISH		TECH. ORDER	RAMERE M00 51
SURFACE FINISH AUSTRALIAN STANDARD ENG. DRWG. PRACTICE A.S.C.I.		SCALE		DRAWING NO.	A11772
		DRAWN	APPROVED		DRWG. A SIZE
		TRACED	CHECKED		

Restricted

AIR FORCE HEAD-QUARTERS

TECHNICAL ORDER

VAMPIRE MODIFICATION No. 52

APPLICATION : Vampire Mk. 3(see para. 2.

CLASSIFICATION : Class 2

LABEL (HYDRAULIC ACCUMULATOR CHARGING-TESTING) - INTRODUCTION

Introduction

1. To facilitate servicing and eliminate any confusion between the hydraulic and pneumatic system charging points, a label (Hydraulic Accumulator charging-testing) has been introduced.

General

2. This modification is applicable to forty (40) Vampire Mark 30 aircraft not incorporating the approved equivalent Modification (De Havilland (Aust) Modification No. V152.)

3. This modification is to be incorporated as follows:-

(a) Aircraft-in-use : Not later than the next minor inspection after receipt of Modification Sets.

(b) Aircraft undergoing repair and inspection : During such repair or inspection.

(c) No special tools are required.

(d) Man-hours : Approximately one man-hour per aircraft.

Supply

4. The following parts will be required to complete one modification set:-

Item No.	Ident. No.	Part No.	Nomenclature	No. off per A/C.	Stores Class.
1	A79/502007	00Q123	Label (Hydraulic Accumulator Charging-Testing)	1	
2	H28C/2287	AGS.252/2	Woodscrew rd. hd. brass, No.2 x 3/8"	4	C

Note: (a) Item 1 will be delivered from De Havilland Aircraft Pty. Ltd. to Modification Section, No. 2 A.D., which will issue this item on demand.

(b) Item 2 will be drawn from unit store.

Salvage

5. No parts will be rendered redundant by the incorporation of this modification.

Method of Incorporation

6. Remove the gun bay doors.

7. Fit label (item 1) with woodscrews (item 2) on the outboard side of the inflation valve, which is mounted on the starboard side, aft face of bulkhead No. 2.

8. Replace the gun bay doors.

9. Record modification in the airframe log book.

Drawings

10. No drawings will be required.

Effect on Weight and Balance

11. The effect of the incorporation of this modification on the weight and balance of the aircraft is negligible.

References : Files R.A.A.F. 9/84/63 and 150/4/8504
L.M.C. Meeting No. 29, D.H. Aust I.L. 196
D.H. Aust. Mod. V152.

Date of Issue : 13th April, 1953.

Restricted

Air Force Head-Quarters

Technical Order

VAMPIRE MODIFICATION NO. 53

Application: Vampire Mk. 30
See para. 2

Classification: Class 2.

PILOT'S ACCESS STEP CABLE - REPLACING CORD

Introduction

1. The main spring controlling the pilot's footstep is limited in extension by a length of balloon cord. As this material has been found liable to deterioration, a new flexible wire check cable is introduced by this modification.

General

2. This Modification is applicable to Forty (40) Vampire Mark 30 Aircraft not incorporating the approved equivalent Modification (De Havilland (Aust) Modification V.138).

3. This modification is to be incorporated as follows:-

(a) Aircraft-in-use - Not later than next minor inspection after receipt of modification sets.

(b) Aircraft undergoing repair and inspection - During such repair or inspection.

(c) No special tools are required.

(d) Man-hours - Approximately 4 man-hours per aircraft.

(e) The trade mustering responsibility for this modification is airframe fitter.

Supply

4. The following parts will be required to complete one modification set:-

Item No.	Ident. No.	Part No.	Nomenclature	No. off per A/C.	Stores Class.
1		00A167ND	Cable, check-make from Bowden type inner cable P7/62 on consolidated wire 7/34, length 18"	1	C
2	H28/9322	AS1882/11C	Bolt. 2BA, 1.5" long.	1	C

Note: (a) Item 1 will be delivered from De Havilland Aircraft Pty.Ltd., to Modification Section No. 2AD, which will issue this item on demand.
Item 2 will be drawn from unit store.
(b) For De Havilland Aircraft Pty. Ltd. only - AMBI packing is not required.

Salvage

5. The following parts will be rendered redundant by the incorporation of this modification:-

Item No.	Ident No.	Part No.	Nomenclature	No. off per A/C.	Stores Class.
3		A004112ND	Cord, Balloon	1	C
4	H28/9322	AS1882/11C	Bolt, 2BA x 1.5" long	1	C

Note: (a) Item 3 & 4 will be disposed of in accordance with current authorised procedure.

Method of Incorporation

6. Withdraw the two bolts, securing the cover plate at the inboard end of the footstep outer casing, and thus disconnect the main springs from the cover plate. Note that the cover plate, the sealing washer and the two bolts with spring washers are to be retained for subsequent reassembly.

7. Withdraw the footstep plunger assembly from its casing.

8. Remove the 2B.A. bolt securing the catch and the outer cover plate to the plunger. Leave the outer cover plate attached to its small spring and remove the catch together with the main spring.

9. Disconnect the main spring from the catch, again retaining all items for subsequent assembly.

10. Remove the balloon cord (item 3) from the main spring.

11. Drill one No.52 hole, edges radiused, in the inner cover plate and one No.52 hole, edges radiused, in the catch as shown on drawing No.A11769.

12. Insert the check cable (item 1) into the main spring and insert the cable end into the newly drilled hole in catch, bend cable end back, form loop by twisting last .75" round cable and solder.

13. Reattach the main spring to the catch and then insert into the plunger.

14. Reassemble the outer cover plate and the catch to the plunger using a new bolt (item 2). Lock the bolt with punch.

15. Insert the plunger assembly into the outer case and attach the other end of the cable into the No. 52 hole in the inner plate as mentioned in para. 11, with the sealing washer in position.

16. Pull the inboard end of the main spring through into the cockpit and attach it to the cover plate.

17. Replace the two 2BA bolts and the spring washer ensuring that a good seal is made to avoid any loss of cabin pressurisation (Apply Bostik 1790-K4/10882).

18. Check the footstep for correct functioning.

19. Record the modification in the airframe log book.

Drawings

20. Drawing A11769 attached herewith.

Effect on weight and balance.

21. The effect of the incorporation of this modification on the weight and balance of the aircraft is negligible.

References	:	Files R.A.A.F. 9/84/16 and 150/4/8503 D.H. Aust. I.L. 199 D.H. Aust. Mod. V138 A.M. Mod. Vam. 984 L.M.C. Meeting No. 30
Attachment	:	Drawing A11769
Date of Issue	:	13th April, 1953.

DO NOT SCALE

ISSUE NO.	DATE	ALTERATION	D. I. L.	INITIALS	APPROVED
1	2.3.53				

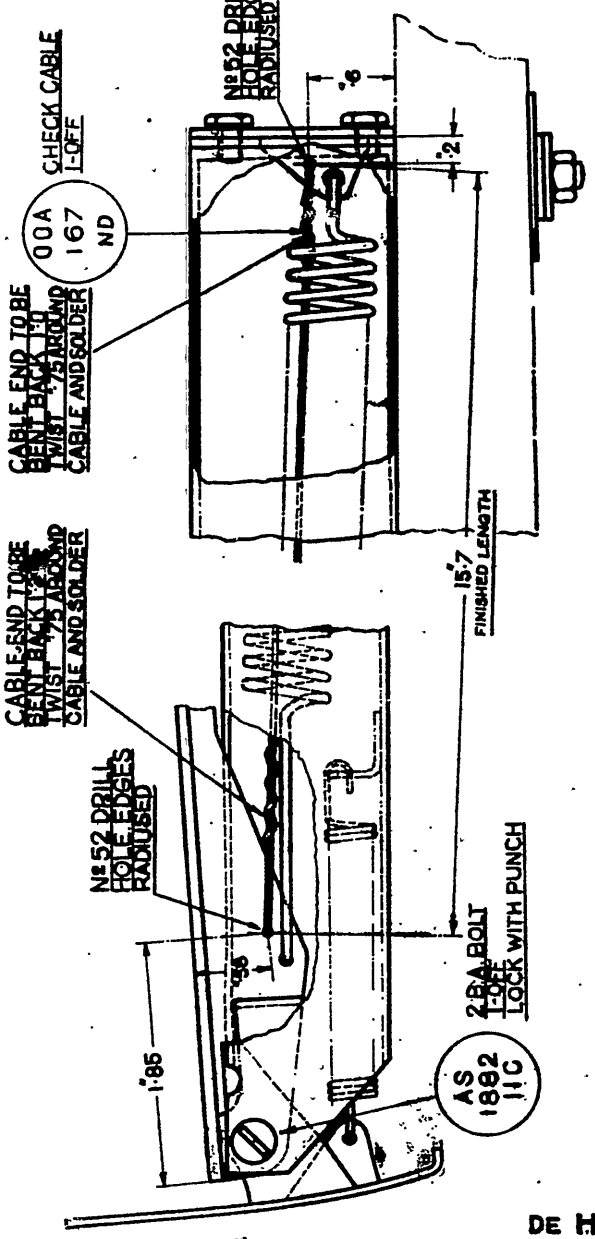

DE HAVILLAND DRG No 00M199

REFERENCE	ISSUED BY	TITLE
	DIRECTORATE OF TECHNICAL SERVICES R.A.A.F	PILOT'S ACCESS STEP CABLE - REPLACING CORD

LIMITS UNLESS STATED		MATERIAL		COMPONENT OF	FUSELAGE
DECIMALS	± .010"	SPEC.		MACHINE	VAMPIRE MK. 30
FRACTIONS	± 1/64"	TREATMENT		ENGINE	NENE – 2 VH
ANGLES	± ½°	FINISH		TECH. ORDER	VAMPIRE MOD. No 531
SURFACE FINISH AUSTRALIAN STANDARD ENG. DRWG. PRACTICE A.9.001		SCALE		DRAWING NO.	A 11769
		DRAWN	G.M.	APPROVED	DRWG. A SIZE
		TRACED		CHECKED	

Air Force Head-Quarters

Technical Order

VAMPIRE MODIFICATION NO. 54

Application: Vampire Mk.30 see para. 2.

Classification: Class 2.

RUDDER PEDAL - IMPROVED ATTACHMENT OF SPRING

Introduction

1. As at present secured, the long ends of the rudder pedal tension springs protrude through to the inboard faces of the sliding links. As cases have been reported of these tags snagging the pilot's clothing, this modification introduces a new anchorage on the outer face of each link.

General

2. This modification is applicable to forty five (45) Vampire Mark 30 aircraft not incorporating the approved equivalent Modification De Havillands (Aust.) Modification V.139.

3. This modification is to be incorporated as follows:-

(a) Aircraft-in-use : Not later than next minor inspection.

(b) Aircraft undergoing repair & inspection. : During such repair or inspection.

(c) No special tools are required.

(d) Man-Hours : Approximately 9 man-hours per aircraft.

Supply

4. The following parts will be required to complete one modification set:-

Item No.	Ident.No.	Part No.	Nomenclature	No. off per A/c.	Stores Class.
1	H28B/5038 or	SP9-E8	Pin, split, 3/32" x 1" long.	8	C
2	H28B/5038	AGS784/11	Pin, split, 3/32" x 1" long.	8	C
3	H28B/5032	AGS784/3	Pin, split, 1/16" x 1" long.	8	C

NOTE (a) Item 1 or 2 and 3 to be drawn from unit store.

Salvage

5. No parts will be rendered redundant by the incorporation of this modification.

Method of Incorporation

6. Remove the blind flying instrument panel in accordance with current authorised procedure.

7. Remove the upper tang of the spring from the R.H. outer link. Refer drawing (A11771).

8. Remove the upper link retaining bolt, the rudder pedal securing bolt and take the link off.

9. Drill a No. 41 hole in the middle of the link. Approx. 1/2" from the insertion hole of the tension spring.

10. Remove the lower tang of the spring from the rudder pedal assy. Insert a new split-pin, (item 1 or item 2) into its place, bend its legs to suit casting and secure the lower spring tang in the pin eyelet.

11. Insert a new split-pin (item 1 or item 2) into the hole in the link, bend its legs to conform with the shape through the newly drilled No. 41 hole and round the edge of the sliding hole.

12. Replace the link and make sure that on replacement, the nuts are locked with new split-pins.

13. Secure the upper spring tang in the pin eyelet.

14. Modify the R.H. inner and the two L.H. spring anchorages similarly being careful to replace distance pieces and washers in correct positions.

15. Check sliding links for correct operation.

16. Replace the blind flying panel and test connections in accordance with current authorised procedure.

17. Record the modification in the airframe log book.

Drawings

18. Drawing A11771 attached herewith.

Effect on Weight and Balance

19. The effect of the incorporation of this modification on the weight and balance of the aircraft is negligible.

References	:	Files R.A.A.F. 9/84/6 and 150/4/8502 D.H. Aust. I.L. No. 195. D.H. Aust. Mod. V139. A.M. Mod. 983. L.M.C. Meeting No. 27.
Attachment	:	Drawing A.11771.
Date of Issue	:	10th April, 1953.

DO NOT SCALE

ISSUE NO.	DATE	ALTERATION	D. I. L.	INITIALS	APPROVED
1					

MODIFY THE R.H. INNER AND THE TWO L.H. SPRING ANCHORAGES SIMILARLY BEING CAREFUL TO REPLACE DISTANCE PIECES AND WASHERS IN CORRECT POSITIONS. THE NUTS ARE LOCKED WITH NEW SPLIT PINS AGS784/3 5/16" DIA. 1-" LONG (NOT SHOWN)

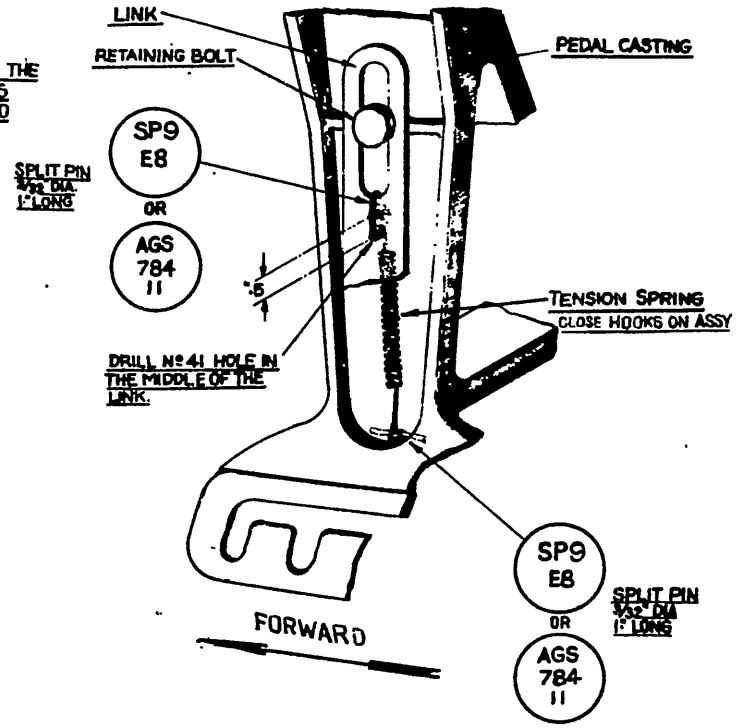

DE HAVILLAND DRG. Nº 00M195

REFERENCE	ISSUED BY	TITLE
	DIRECTORATE OF TECHNICAL SERVICES R.A.A.F.	RUDDER PEDAL - IMPROVED ATTACHMENT OF SPRING

LIMITS UNLESS STATED		MATERIAL			COMPONENT OF	COCKPIT	
DECIMALS	± .010"	SPEC.			MACHINE	VAMPIRE MK 30	
FRACTIONS	± 1/32"	TREATMENT			ENGINE	NENE-2 VH	
ANGLES	± ½°	FINISH			TECH. ORDER	VAMPIRE MOD 54	
SURFACE FINISH AUSTRALIAN STANDARD ENG. DRWG. PRACTICE A.S.C.2		SCALE			DRAWING NO.	A11771	DRWG. A SIZE
		DRAWN		APPROVED			
		TRACED		CHECKED			

Restricted

Air Force Head-Quarters

Technical Order

VAMPIRE MODIFICATION NO.55

Application: Vampire Mk.2 and Mk.30

AIR INTAKES AND FAIRINGS - CHANGE OF LOCATION

Introduction

1. This modification details the removal of the engine air intakes and fairing from the upper cowling and their fitment to the lower cowling to improve the aircraft flight characteristics at high speeds.

General

2. All nene-powered Vampire aircraft excepting A78-2 are to be modified not later than the next minor inspection.

3. No special tools are required.

4. The work will take approximately seventy-two (72) man-hours and will be carried out by Special RAAF WORKING PARTY.

Supply

5. The following parts are required for one modification set:-

Item No.	Ident. No.	Part No.	Nomenclature	No. off per A/C	Stores Class
1		Dwg No. A9218/3	Plate D.T.D. 390 11.13/16" x 7.9/16" x 18 Swg.	2	
2	H128F/30324	AS2228/506	Rivets Brazier Head Spec D.T.D. 327 5/32" x $\frac{3}{8}$".	58	"C"
3	H128F/5806	B191-5-7	Rivets Brazier Head Spec D.T.D. 327 5/32" x 7/16".	8	"C"
4	H128F/5721	B191-4-3	Rivets C/sunk 120° Spec D.T.D. 327 $\frac{1}{8}$" x 3/16".	200	"C"
5	H128F/5719	B191-4-4	Rivets C/sunk 120° Spec D.T.D. 327 $\frac{1}{8}$" x $\frac{1}{4}$".	6	"C"
6	H128F/5725	B191-4-5	Rivets C/sunk 120° Spec D.T.D. 327 $\frac{1}{8}$" x 5/16".	206	"C"
7	H128F/5735	B191-4-6	Rivets C/sunk 120° Spec D.T.D. 327 $\frac{1}{8}$" x $\frac{3}{8}$".	12	"C"
8	H128F/2742	B182-5-4	Rivets B/Head Spec D.T.D. 327 5/32" x $\frac{1}{4}$".	8	"C"
9	H128F/31581	AN940-AD	Washers Al/Alloy 5/32" x 7/16" x .049.	8	"C"
10	H128F/60869	TAP/D/ 429EH	Rivet Tucket Pop $\frac{1}{8}$" x .290 B.H.	40	"C"

Item No.	Ident. No.	Part No.	Nomenclature	No. off per A/C	Stores Class
11	H128F/31040	AN425AD--4-5	Rivets Flathead Spec D.T.D. 327 $\frac{1}{8}$" x 5/16".	32	"C"
12	H128F/31041	AN425AD--4-6	Rivets Flathead Spec D.T.D. 327 $\frac{1}{8}$" x $\frac{3}{8}$"	36	"C"
13	H128F/5735	B191-4-6	Rivets C/Sunk 120° Spec D.T.D. 327 $\frac{1}{8}$" x $\frac{3}{8}$".	50	"C"
14		Dwg No A9218/1	Grill, Supplementary air ducts.	2	"C"
15	H128F/5223	B312-B8-8	Screw P.K. Binding Head No.8 x $\frac{1}{2}$".	14	"C"

Note: The foregoing set will be supplied to Modification Section, No.2 Aircraft Depot.

Salvage

6. No parts will be rendered redundant by the incorporation of this modification.

Method of Incorporation

7. This modification is incorporated in the following sequence of operations:-

(a) Remove the upper and lower engine cowlings from the aircraft.

(b) Remove the air ducts and their fairings from the upper engine cowling by drilling the heads of the $\frac{1}{8}$ inch countersunk rivets using a No.30 drill, and unscrewing the 2 B.A. screws, nuts and washers from the air duct bracket.

(c) Position item No.1 over the exposed air duct openings, mark the location and drill the rivet holes.

(d) Rivet item No.1 into position using items Nos.2 and 3 inserting them from the outer side.

(e) Dimple the existing rivet holes exposed by removal of the air duct and fairing and fill them by riveting in items Nos.4, 5, 6 and 7.

Note: Item No.7 may be required due to differences of aircraft structures.

(f) Fill in the air duct bracket holes by riveting in items Nos.8 and 9.

(g) Remove the short stringers indicated on the drawing.

(h) Mark off and cut out the air duct openings on the lower engine cowling.

Note: These openings are not standard and are to be marked off and cut to suit each air duct.

(i) Weld the rivet holes in the air ducts where required.

(j) Locate the short stringers and rivet them into their new position using item No.10.

(k) Locate the air ducts and brackets and drill for rivets and screws.

(l) Rivet the air ducts into position using items Nos.11 and 12 and secure the brackets with the 2-BA screws, washers and nuts previously removed, (paragraph 7(b)).

(m) After trial fitment weld unwanted rivet holes in the air duct fairings.

(n) Again position the fairing and make any adjustment necessary to effect a close fit to the engine cowling.

(o) Drill the fairings and cowling, and rivet the fairings into position using items Nos.6, 10 and 13.

(p) Fit the grill (item No.14) tightly onto the front of the air duct fairings, drill and secure with item No.15. (Drawing No. A.9218).

Drawings

8. Drawings A9218, A9218/1 to 3 have been issued to RAAF Working Party.

Effect on Weight and Balance

9. The effect of this modification on the weight and balance of the aircraft is negligible.

References : Files R.A.A.F. 9/84/488 and 150/4/8510

Date of Issue : 3rd December, 1953.

This sheet missing from copy

— Restricted

De artment of Air

AMENDMENT LIST NO. 56

TO

AUSTRALIAN AIR PUBLICATION 721:79

Volume 2 Part 2

Vampire Modifications

---

1. Vampire Modification No. 56

(a) Paragraph 128, item 98, column 4, insert "4BA" in lieu of "2BA".

(b) Paragraph 129 after item 105, insert:- "105a/ /L00335/ Bracket, micro - Switch / 1 / -".

(c) Paragraph 132, line 3, insert "102" in lieu of "10".

(d) Paragraph 134, line 2, delete "(items 11 and 12)" and insert "(items 103 and 104), also the bracket (item 105a)".

(e) Paragraph 135:-
(i) line 2, insert "item 105" in lieu of"item 13".
(ii) line 2, and 3, delete" the four rivets (items 14 and 15) and ".
(iii)line 3, insert "item 108" in lieu of "item 16".

(f) Paragraph 132, line 2, delete"1" and insert "93".

(g) Paragraph 137:-
(i) line 1, delete "2" and insert "94".
(ii)line 2, delete "3" and insert "95".
(iii) line 3, delete "4" and insert "96".

(h) Paragraph 138:-
(i) line 1, delete "5" and insert "97".
(ii)line 2, delete "6" and insert "98".
(iii) line 2, delete "4" and insert "96".

(j) Paragraph 139:-

(i) line 2, delete "7" and insert "99".
(ii)line 3, delete "8" and insert "100".
(iii) line 4, delete "9" and insert "101"

2. When the above amendments have been incorporated, make the necessary entry in the amendment certificate.

Reference: File Department of Air 150/4/8434

Date of Issue: 14th August, 1956.

Restricted

Air Force Head-Quarters

Technical Order

VAMPIRE MODIFICATION NO. 57

Application: Mks. 30 & 31
(See para. 2)
Classification: Class 2

SAFETY CATCH ON DROP TANK CONTROL GUARD - INTRODUCTION

Introduction

1. This modification authorises the introduction of a safety catch for the drop tank jettison lever to prevent inadvertent release of the drop tanks and bombs.

2. This modification is applicable to 56 Vampire Mk. 30 and Mk. 31 aircraft not incorporating the approved equivalent modification, De Havilland (Aust.) Modification No. V144.

3. This modification is to be incorporated as follows:-

(a) Aircraft-in-use : As early as possible but not later than next minor inspection.

(b) Aircraft undergoing repair and inspection : During such repair or inspection.

(c) No special tools are required.

(d) Man-hours : Approximately 6 man-hours per aircraft.

(e) The trade mustering responsibility for the incorporation of this modification is Fitter 2A.

Supply

4. The following parts will be required to complete one modification set:-

Item No.	Ident No.	Part No.	Nomenclature	No. off per A/c.	Stores Class.
1	H28/7286	2A15Y/17C	Bolt, 2 B.A. x 1.7" long	1	
2	H28C/12252	SP13/C	Washer, 2 B.A.	2	
3		00B43	Cover	1	
4	H28B/5032	AGS.784/3	Pin, split, 1/16" dia. x 1" long	2	
5	A79/502021	00B45	Spring	1	
6		AS2806/4/18	Tube, distance	1	
7	H28/767	A16YCS	Nut, 2 B.A., slotted	1	
8	H28B/5031	AGS.784/2	Pin, split, 1/16" dia. x 3/4" long	1	

Note: Items 1-8 will be delivered from De Havilland Aircraft Pty. Ltd. to Master Modification Section No. 2 Aircraft Depot. Master Modification Section will issue these items on demand.

Salvage

5. No parts will be rendered redundant by the incorporation of this modification.

Method of Incorporation

6. Locate the drop tank jettison lever guard at the L.H. side of the pilots seat on the cockpit floor.

7. Undo the four bolts with which the guard is connected to the four ferrules in the cockpit floor and temporarily remove the guard from the aircraft. Retain the bolts and washers.

8. Refer drawing A.11756 and drill a letter E hole through the guard in accordance with the dimensions shown.

9. Then assemble the two split-pins (item 4) through the two holes in the cover side plates with the eyes at the inside. Bend the legs of the split-pins over the outer face to suit.

10. Assemble the spring (item 3) with the end legs through the eyes of the split-pins so that the hook of the spring, and the top angle of the cover plate are at the same side and the hole through the spring lines up with the two holes in the side plate.

11. Place the spring together with the cover plate over the top of the guard with the hook of the spring to the rear and push the distance tube (item 6) through the side plates, the spring and the newly drilled hole in the guard.

12. Fit the bolt (item 1) through the distance tube and assemble a washer (item 2) under the head of the bolt and under the nut (item 7). Lock the nut with the split-pin (item 8).

13. Replace the guard in the cockpit using the original screws and washers.

14. Check the catch for correct functioning and lock the jettison lever.

15. Record the modification in the Airframe Log Book.

Drawings

16. Drawing A.11756 is attached.

Effect on Weight and Balance

17. The effect of the incorporation of this modification on the weight and balance of the aircraft is negligible.

References : File R.A.A.F. 9/84/16
D.H. (Aust.) Mod. V144
D.H. (Aust.) I.L. 203
A.M. Mod. VAM. 946
L.M.C. Meeting No. 29

Attachment : Drawing A.11756

Date of Issue : 30th March, 1953.

DO NOT SCALE

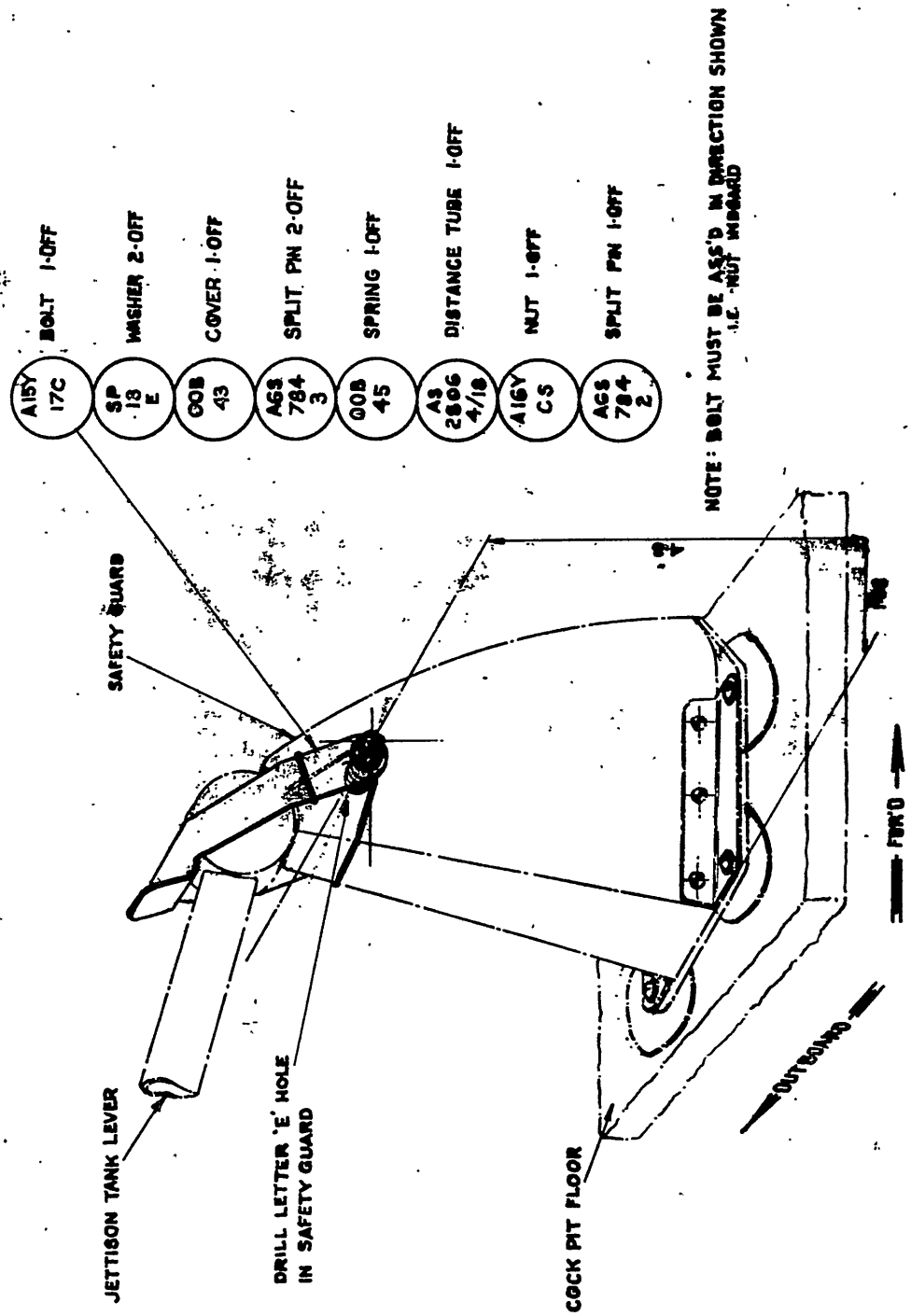

DE HAVILLAND DRG No. 00M 203 SHT 1 No. OF SHTS 1

REFERENCE	ISSUED BY				TITLE	
					SAFETY CATCH ON DROP TANK CONTROL GUARD - INTRODUCTION	
LIMITS UNLESS STATED		MATERIAL			COMPONENT OF	
DECIMALS	± .010"	SPEC.			MACHINE	
FRACTIONS	± 1/32"	TREATMENT			ENGINE	
ANGLES	± ½°	FINISH			TECH. ORDER	VAMPIRE ORDER Nº 57
SURFACE FINISH AUSTRALIAN STANDARD ENG. DRWG. PRACTICE A.S.E21		SCALE			DRAWING NO.	A11756 DRWG. A SIZE
		DRAWN		APPROVED		
		TRACED		CHECKED		

Technical Order

VAMPIRE MODIFICATION NO. 58

Application: Vampire Mk.30

Classification: Class 2

LANDING WHEEL LOCK RING - WIRE LOCKING

Introduction

1. This modification authorises the introduction of wire locking on the lock ring of the undercarriage landing wheel in order to prevent the lock ring being sprung out of place should a tyre failure occur.

General

2. This modification is to be incorporated on Vampire aircraft incorporating the single brake unit. Aircraft with dual brake units introduced by Vampire Modification De Havilland (Aust.) Modification V.78, have the wheel lock ring wire locked.

3. This modification is to be incorporated as follows:-

(a) Aircraft-in-use : Not later than the next minor inspection

(b) Aircraft undergoing repair or inspection : During such repair or inspection

4. No special tools are required.

5. Man-hours : Approximately 1/2 Man-hour

Supply

6. The following part, which is to be drawn from unit stores stock, is required to complete one modification set:-

Item	Ident.No.	Part No.	Nomenclature	No. off per a/c.	Stores.
1	11/9646	N.A.	Wire-Locking Stainless Steel	As Required	C

7. No parts will be rendered redundant by the incorporation of this modification.

Incorporation

8. The wheel lock-ring is to be removed from the wheel in accordance with current authorised procedure.

9. The two ends of the lock ring are to be worked so as to provide a lug at each end of the lock ring as shown in drawing A.11765.

10. Into the vertical flats of the lugs fabricated at operation No.9, drill a 1/16" diameter hole into each lug in accordance with drawing No. A.11765.

11. The lugs are to be treated with a protective coating in accordance with A.E.I.G. Part 2, Section 1.

12. Assemble lock ring and wheel and lock the lock ring with the locking wire, stainless steel, 20 SWG (Item 1).

13. Record the modification in the airframe log book.

Drawing

14. Drawing A.11765 attached.

Weight and Balance

15. The effect of the incorporation of this modification on the weight and balance of the aircraft is negligible.

References	:	R.A.A.F. File 9/84/162 De Havilland (Aust.) Mod.V78, 150/4/8520
Attachment	:	Drawing No. A.11765
Date of Issue	:	15th June, 1953.

2-3-53

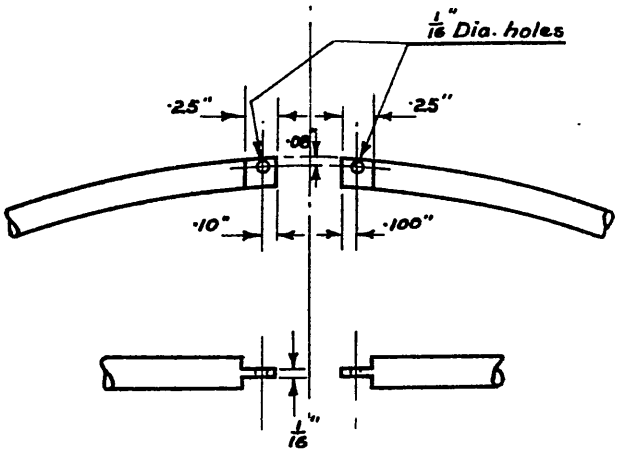

REFERENCE	ISSUED BY	
	DIRECTORATE OF TECHNICAL SERVICES	LANDING WHEEL – LOCK RING
	R.A.A.F.	WIRE LOCKING
		UNDERCARRAGE
		VAMPIRE MK 30
		NENE 2VH
		VAMPIRE MOD 58
	L.M.R.	A-11765

Air Force Head-Quarters

Technical Order

VAMPIRE MODIFICATION NO. 59

Application: Mk.30
see para.2.

Classification: Class 2

FUEL GAUGE TRANSMITTER ARM - INTRODUCTION OF REWORKED ARM.

Introduction

1. This modification authorises the introduction of a reworked fuel gauge transmitter arm in the main fuel tank to eliminate the possibility of the arm fouling on the inverted flight tank.

General

2. (a) This modification is applicable to twenty-nine (29) Vampire Mark 30 aircraft not incorporating the approved equivalent modification De Havilland (Aust.) Modification V.128.

(b) This modification is to be incorporated as follows:-

(i) Aircraft in use : Not later than next minor inspection.

(ii) Aircraft undergoing repair and inspection : During such repair or inspection.

(c) No special tools are required.

(d) Man-hours : Approximately ten (10) man-hours per aircraft.

(e) The trade mustering responsible for this modification is instrument fitter, instrument mechanic and fitter airframe.

Supply

3. The following part is required to complete one modification set:-

Item No.	Ident. No.	Part No.	Nomenclature	No. off per a/c.	Stores Class.
1	G6A/500069	00P119	Tank - Units fuel Contents.	1	A

Note: Item 1 is to be issued on demand to units from Sub-modification Section No. 2AD.

Salvage

4. The following part is rendered redundant by the incorporation of this modification:-

Item No.	Ident. No.	Part No.	Nomenclature	No. off per a/c	Stores Class
2	G6A/1876	-	Unit, Fuel Contents	1	A

Note: Item 2 is to be returned to No.2 Aircraft Depot where it is to be reworked and passed into the modification section of that unit.

Method of Incorporation

5. The following sequence of operations is the method of incorporating this modification:-

(a) Open the gun bay doors.

(b) Refer Australian Air Publication 828 Section 4 paragraph 70 and drain the main fuel tank.

(c) Remove the cannon heating pipe, in the way of the fuel contents gauge. Seal off the open ends. Retain all attachments.

(d) Disconnect the fuel contents unit electrical leads.

(e) Disconnect and remove the fuel contents unit (item 2) and retain all attaching parts.

(f) Temporarily connect the new fuel contents unit (item 1) to the electrical cable. Move the transmitter arm and check for correct operation of the indicator in the cockpit.

(g) Disconnect the lead again and fit the new fuel contents unit using the attaching parts retained in paragraph 5(e).

(h) Apply Seaplane Varnish BSSX19 or an approved jointing compound.

(i) Reconnect the electrical cable.

(j) Replace the cannon heating pipe.

(k) Close the gun bay doors.

(l) Record the modification in the Airframe Log Book.

Effect on Weight and Balance

6. The effect of the incorporation of this modification on the weight and balance of the aircraft is negligible.

Drawings

7. No Drawings will be required.

References : Files R.A.A.F. 9/84/203, 150/4/8523
D.H.Aust. Mod V128
L.M.C. Meeting No.27.

Date of Issue : 15th January, 1954.

OXYGEN BOTTLES - VERTICAL POSITION - PART "A"

Reason for and Description of Modification

1. (a) This modification is introduced to reposition the oxygen bottles from a horizontal position into a vertical position, thereby improving the accessability and making for ease of maintenance and periodical inspection.

(b) PART "B" of this modification was reserved for redesign and re-location of the control locking gear, but in view of the further redesign required by D.H. (Aust.) Modification V.100, Ejection Seat, the control locking gear is to be supplied as loose equipment, until D.H. (Aust.) Modification V.100 is incorporated.

Application

2. This modification is applicable to Vampire Mks. 30 & 31 aircraft not incorporating the approved equivalent modification De Havilland (Aust.) Modification V.161 (Part "A").

Responsibility for Incorporation

3. Aircraft depot or civilian contractor responsible for the servicing of Vampire aircraft.

Action in Respect of Spares

4. Not applicable.

Orders Superseded or Cancelled

5. Nil.

Equivalent Modifications

6. De Havillands (Aust.) Modification V.161 Part "A" is the equivalent modification.

Supply

7. The following parts are required to complete one modification set:-

Item No.	Ident. No.	Part No.	Nomenclature	No. off per set	Stores Class
1.		00Q165	Block, Packing	2	
2.		00Q191	Block, Packing	2	
3.		00Q163	Block, Support	1	
4.	H28/7887	A25/22E	Bolt, ¼ BSF, 2.70" long H.T.S., Hex.	4	
5.		6A1/22B	Bolt, 4 BA x 2.55" long Hex. Hd., M.S.	4	
	or				
	H28/26196	A25/22B	Bolt, Hts, Hex. Hd. 4 BA x 2.6" long.	4	
6.	H28/6993(0)	6A1/3C	Bolt, M.S., 2 BA x .7 long, Hex. Hd.	2	
	or				
	H28/7063	A25/3C	Bolt, HTS, 2 BA x .75 long, Hex. Hd.	2	
7.	H28/6999	6A1/9C	Bolt, M.S., 2 BA x 1.3" long, Hex. Hd.	4	
	or				
	H28/7280	A25/9C	Bolt, HTS, 2 BA x 1.35" long, Hex. Hd.	4	
8.	H28/7114	6A1/	Bolt, M.S., Hex. 2 BA x 2.3" long	4	
	or				
	H28/7469	A25/19C	Bolt, 2 BA x 2.35" long, HTS, Hex. Hd.	4	
9.	H28/10288	AGS.2001/C1	Nut, Stiff, 2 BA	10	
10.	H28/5315	A16Y/BP	Nut, MS, Plain	4	
11.	A79/502069	00Q193	Label	1	
12.		00Q159	Plate, Attachment	2	
13.		00Q171AND	Pipe Assy.	2	
14.		00Q179AND	Pipe Assy.	1	
15.		00Q225AND	Pipe Assy.	1	
16.		00Q229AND	Pipe Assy.	1	
17.	A79/502072	AS.2425/36¼	Strap, Retaining	1	
18.	A79/502071	00Q155A	Strap, Oxygen Bottles	4	
19.	A79/500029	AS.2426	Screw, Clamping, 2BA	1	

Supply 7. (Cont'd)

Item No.	Ident.No.	Part No.	Nomenclature	No. off per Set	Stores Class
20.	A79/502070	00Q185	Screw, Clamping	2	
21.	A79/502073	AS.2427	Trunnion	2	
22.	A79/502074	AS.2429	Trunnion	2	
23.	A79/502075	AS.2430	Trunnion	1	
24.	A79/502076	AS.2432	Trunnion	1	
25.	H28C/12252	SP13/C	Washer, 2BA	14	
26.	H28C/3081	AGS.161/C	Washer, 2BA	12	
27.	H28C/35826	DHS.33/1	Washer, Shrinkage	16	
28.		00Q187ND	Washer, Ply, Packing	8	
29.	H28C/2536	AGS.251/26	Screw, Wood No.4 x $1\frac{1}{2}$" lg.	8	
30.	H28C/2526	AGS.251/42	Screw, Wood, No.6 x $1\frac{1}{4}$" lg.	6	
31.	H28C/2664	AGS.253/39	Screw, Wood, No.6 x $\frac{3}{4}$" lg. R. Hd.	4	
32.	H28C/8518	AS470E	Washer, Packing, Al. Alloy	8	
33.	I1/1444		Wire, Locking, 20 SWG.	A.R.	

Notes: - (a) As directed by Air Force Head-Quarters, items 1 to 32 inclusive will be supplied as complete sets by G.A.F. to Master Modification Centre, No.1 Aircraft Depot, who will automatically issue sets to units holding aircraft which require modification.

(b) Item 33 is to be drawn from unit stores.

Disposal of Parts Removed

8. The following parts are redundant:-

Item No.	Ident.No.	Part No.	Nomenclature	No. off per Set	Stores Class
34.		A001615A	Arch Assy.	1	
35.		Q002037A	Bearer, Oxygen Bottles	8	
36.		A001533ND	Block, Spruce	4	

Disposal of Parts Removed 8. (Cont'd)

Item No.	Ident.No.	Part No.	Nomenclature	No. off per Set	Stores Class
37.	H28/7153	6A1/22C	Bolt, 2BA x 2" lg. M.S., Hex. Hd.	4	
38.	H28/7088	6A1/15E	Bolt, ¼" BSF x 1" lg. M.S., Hex. Hd.	4	
39.	H28/7265	6A1/14B	Bolt, 4BA x 1" lg. M.S., Hex. Hd.	4	
40.		A001003A	Bracket, Retaining, Strap	4	
41.	A79/500983	Q00141	Pin	4	
42.	H28B/5032	AGS.784/3	Pin, Split, 1/16" x 1" lg.	8	
43.		Q00766AND	Pipe Assy.	1	
44.		Q00411AND	Pipe Assy.	1	
45.		Q00410AND	Pipe Assy.	1	
46.		Q00412AND	Pipe Assy.	1	
47.		Q00413AND	Pipe Assy.	1	
		or			
48.		COQ135AND	Pipe Assy.	1	
49.		OOQ137AND	Pipe Assy.	1	
50.	H28/5315	A16I/BP	Nut, Slotted, 4BA	4	
51.	A79/500029	290530	Screw, Clamping	2	
52.	A79/501057	Q002035A	Strap, Retaining	2	
53.	A79/501058	Q002036A	Strap, Retaining	2	
54.	A79/501425	290528	Trunnion	2	
55.	A79/501426	290529	Trunnion	2	
56.	H28C/2295	AGS.252/20	Screw, Wood, No.4 x ½" lg. R. Hd.	16	
57.	H28C/2183	AGS.250/21	Screw, Wood, No.4 x ⅝" lg. C'sk	8	
58.	H28C/2685	AGS.253/42	Screw, Wood, No.6 x 1¼" lg. R. Hd.	4	
59.	H28C/2664	AGS.253/39	Screw, Wood, No.6 x ¾" lg. R. Hd.		
60.	A79/501685	00Q79	Label	1	

Notes: -

(a) Items 34 to 50 inclusive, 52, 53 and 56 to 60 inclusive are to be disposed of in accordance with the authorised current procedure.

(b) Items 51, 54 and 55 are Mosquito parts and are to be returned to the appropriate stores.

Disposal of Parts in Stock

9. Nil.

When Modification is to be Incorporated

10. This modification is to be incorporated as soon as practicable, but not later than at next major servicing after receipt of the modification sets.

Method of Incorporation

11. (a) Man-hours involved : Approximately sixty (60) man-hours are required to incorporate this modification.

(b) Special tools, jigs, &c. : Nil.

(c) Sequence of Operations :

(i) Open the ammunition doors. Disconnect and remove the radio and the control locking gear.

(ii) Turn off the control valve located on the starboard side of bulkhead No.2.

(iii) Disconnect the pipe line, leading from the bottles to the control valve on bulkhead No.2 at both ends and from the clip on the bulkhead. Discard the complete pipe assembly, item 43.

(iv) Also disconnect the pipe lines, leading from the bottles to the filter and from the filter to the control valve on bulkhead No.3. Discard both pipe assemblies, items 44 and 45.

(v) Disconnect the two pipe lines, interconnecting the bottles from the top bottle, unscrew the turnbuckles on the two retaining straps and remove the top bottle. Seal off the open ends.

(vi) Unscrew and discard the four bearers on the arch assembly together with their attachments, items 35 and 36.

(vii) Remove the four retaining straps from the four brackets. Discard the retaining straps, items 52 and 53, with their attachments, items 41, 42, 51, 54 and 55.

Method of Incorporation (Cont'd)

(viii) Unscrew the four bolts holding the retaining strap bracket and the arch assembly to the spruce member. Remove and discard the arch assembly, the four brackets and four bolts, items 34, 37 and 40.

(ix) Lift out the underneath bottle and disconnect the two pipe lines, items 46 and 47 or 48 and 49. Seal off the open ends.

(x) Unscrew and discard the four bearers together with the spruce blocks on which they rest, items 35, 36, 57 and 59.

(xi) Open the gun-bay doors, locate the inboard cannon mounting brackets, support the cannons and remove the four bolts screwed with their upper ends into the washer plates, located on the members on the cannon floor of the oxygen bottle arch. Also remove one bolt holding the member to the cannon floor on each side of the two washer plates. Discard the eight bolts and four nuts, items 38, 39 and 50. Retain all other attachments.

(xii) Unscrew and discard the four screws, item 58, holding the two washer plates in position and temporarily remove the washer plates.

(xiii) Refer Drawing A11937, sheet 2 and position the two new packing blocks, item 1, as shown. Attach to the member using four screws, item 29.

(xiv) Spotting through from the underside of the cannon floor, drill two (2) $\frac{1}{4}$ inch holes and two (2) 4BA holes in each packing block as shown on the drawing.

(xv) Reposition the two washer plates on top of the packing to coincide with the newly drilled $\frac{1}{4}$ inch holes and attach with the screws, item 31.

(xvi) Replace the bolts removed in operation (xi) by eight new bolts, items 4 and 5, using the original washers and four (4) new nuts, item 10. Remove the cannon supports.

(xvii) Position the two (2) attachment plates as per Drawing 11937, sheet 2, mark off and drill four (4)

Method of Incorporation (Cont'd)

2BA holes through the cannon floor. Assemble the retaining straps, item 18, to the attachment plates, item 12, using attachment parts, items 6, 9 and 25. Then fit the attachment plates to the floor with the following parts, items 7, 9, 25, 26, 27 and 28, and to the members, using item 30.

Note: - The ply packing, item 28, is to be relieved locally to clear the inboard cannon mounting brackets.

(xviii) Position the oxygen bottle support block, item 3, and spot four (4) 2BA holes through the cannon floor. Then attach the support block using new parts, items 8, 9, 26, 27 and 28.

(xix) Assemble the two oxygen bottles together as shown, placing the two packing blocks, item 2, between the bottles and the retaining strap, item 17, round the outside. Lock with trunnions, items 23 and 24, and clamp screws, item 19. Interconnect the bottles with the two pipe assemblies, item 13.

(xx) Place the two bottles on the support block and lock the retaining straps over the bottles as per Drawing A.11937, sheet 1 using parts, items 20, 21 and 22.

(xxi) Install the new pipe assemblies leading from the bottles to the control valve on bulkhead No.2, item 14, from the bottles to the filter, item 15, and from the filter to the control valve on bulkhead No.3, item 16. Fit label, item 11, in lieu of item 60.

(xxii) Refill the oxygen bottles in accordance with the authorised current procedure and check the system for correct functioning.

(xxiii) Replace the radio and close the ammunition and gun-bay doors.

Method of Incorporation (Cont'd)

Note: - On replacement of the radio, take care that there is sufficient clearance between the top of the oxygen bottles and the radio mounting plate.

In cases where this clearance is unsatisfactory, pack up the mounting plate by means of washers, item 32, between mounting structure and plate. The control locking gear now becomes loose equipment and must be treated as such, until the Ejection Seat Modification De Havillands V.100 is incorporated (paragraph 1(b) refers).

(xxiv) All pipe couplings and trunnions must be locked with 20 SWG galvanised soft iron wire, item 33.

(xxv) Redundant screw holes in wooden components should be filled with synthetic resin cement, Specification DTD 484 (K4/10864).

(d) Tests : Check system for leaks and correct functioning.

(e) Recording : When the modification has been embodied and inspected in accordance with the current procedure, the appropriate entries are to be made in the Airframe Log Book.

Drawings

12. Drawing A.11937, sheets 1 and 2 attached herewith.

Effect on Weight and Balance

13. The effect of the incorporation of this modification on the weight and balance of the aircraft is negligible.

References : Files R.A.A.F. 9/84/16 and 150/4/8531.
Attachment : Drawing A.11937, sheets 1 and 2.
Date of Issue : 12th January, 1955.

DO NOT SCALE

ISSUE NO	DATE	ALTERATION	D. I. L.	INITIALS	APPROVED
1					

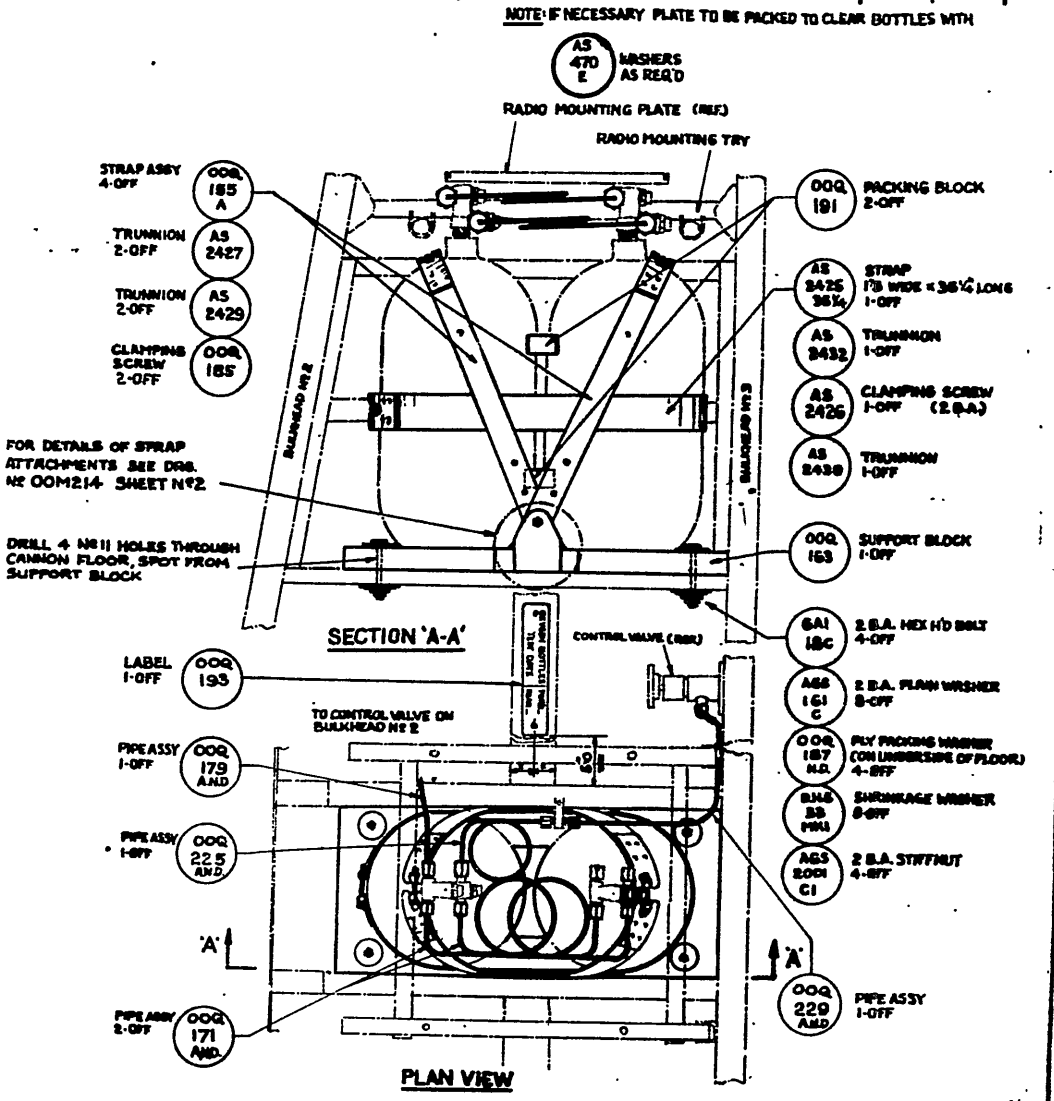

DE HAVILLAND DRG. Nº OOM 214 SHEET Nº1 OF 2 SHEETS

REFERENCE		ISSUED BY			TITLE	
		DIRECTORATE OF TECHNICAL SERVICES R.A.A.F.			OXYGEN BOTTLES - VERTICAL POSITION PART 'A'	
LIMITS UNLESS STATED		MATERIAL			COMPONENT OF	FUSELAGE
DECIMALS	± .010"	SPEC.			MACHINE	VAMPIRE MKS. 30 & 31
FRACTIONS	± 1/32"	TREATMENT			ENGINE	NENE 2VH.
ANGLES	± ½°	FINISH			TECH. ORDER	VAMPIRE MOD. Nº 80
SURFACE FINISH AUSTRALIAN STANDARD ENG. DRWG. PRACTICE A.S.C.21		SCALE				
		DRAWN		APPROVED	DRAWING NO.	A11937 Sht 1
		TRACED		CHECKED		DRWG. A SIZE

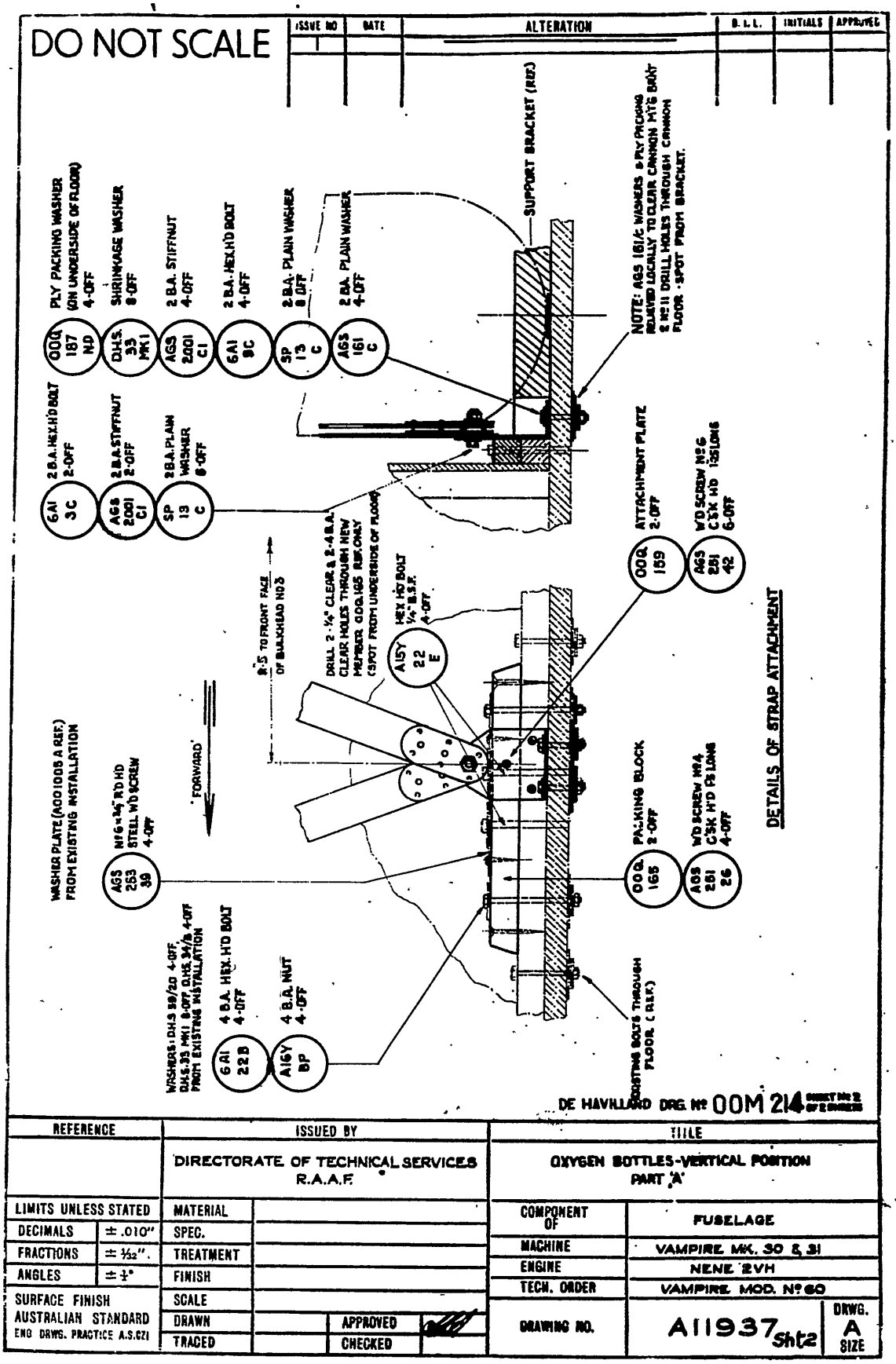

REFERENCE	ISSUED BY	TITLE
	DIRECTORATE OF TECHNICAL SERVICES R.A.A.F.	OXYGEN BOTTLES-VERTICAL POSITION PART 'A'

LIMITS UNLESS STATED		MATERIAL		COMPONENT OF	FUSELAGE
DECIMALS	± .010"	SPEC.		MACHINE	VAMPIRE MK. 30 & 31
FRACTIONS	± 1/32".	TREATMENT		ENGINE	NENE 2VH
ANGLES	± ½°	FINISH		TECH. ORDER	VAMPIRE MOD. Nº 60
SURFACE FINISH AUSTRALIAN STANDARD ENG DRWG. PRACTICE A.S.C.2		SCALE		DRAWING NO.	A11937 Sht 2
		DRAWN	APPROVED		DRWG. A SIZE
		TRACED	CHECKED		

Restricted

Air Force Head-Quarters

Technical Order

VAMPIRE MODIFICATION NO. 61

Application: Mks.30 & 31. See para. 2.

Classification: Class 2.

LOWER HALF FITTINGS COMPLETE WITH BOLTS FOR UNDERCARRIAGE BEARING TUBE - REDESIGNED

Introduction

1. This modification authorises the introduction of redesigned bolts and main undercarriage bearing fittings as at present a possibility of failure of the bolts in the abovementioned fittings exists, causing collapse of the oleo leg.

General

2. This modification is applicable to Vampire Mks.30 and 31 aircraft not incorporating the approved equivalent modification, De Havilla (Aust.) Modification No. V.124.

3. This modification is to be incorporated as follows:-

(a) Aircraft in use : Not later than the next minor inspection after receipt of modification sets.

(b) Aircraft undergoing repair or inspection : During such repair or inspection.

4. The following special tools are required:-

(i) A79/500013; Y00185A, Spanner, special, L.H.
(ii) A79/500014; Y00186A, Spanner, special, R.H.

(a) Man Hours: Approximately 4 man-hours per aircraft.

(b) The trade mustering responsibility for this modification is airframe fitter and electrical fitter.

Supply

5. The following parts will be required to complete one modification set:-

Item No.	Ident. No.	Part No.	Nomenclature	No. off per a/c	Store Class
1	H28/7321	2A15Y/5J	Bolt, 3/8" B.S.F. 1.15" long.	4	C
2	H28C/3074	AGS.160F	Washer .38" I/D x .065" thick.	8	C
3	H28/27028	AGS.2001/J1	Nut, M/S SF/L 3/8" B.S.F.	12	C

Item No.	Ident. No.	Part No.	Nomenclature	No. off per a/c	Stores Class
4	A79/501864	G001743	Bolt, special	8	
5	A79/501850	G001017	Piece, packing	8	
6	A79/501965	G001010	Pick-up hinge	4	
7	A79/501963	G001759	Fittings, front end	2	
8	A79/501966	G001761	Fittings, rear end	2	
9	I1/1444	N.A.	Wire, locking, 20 swg. soft iron	As Reqd.	C

Note : (a) Items [illegible] inclusive will be delivered from De Havilland Aircraft Pty. Ltd. to Sub-Modification Section 2 A.D., which will issue these items on demand.

(b) Item 9 is to be drawn from unit store.

Salvage

6. The following parts will be rendered redundant by the incorporation of this modification:-

Item No.	Ident. No.	Part No.	Nomenclature	No. off per a/c.	Stores Class
10	H28/10292	J.P.1	Nut, pinnacle 3/8" B.S.F.	8	C
11	H28D/7071	2A15Y/5G	Bolt, 5/16" B.S.F. 1" long	4	C
12	H28C/3073	AGS160E	Washer, .32" I/D x .065" thick	8	C
13	H28/10291	G.P.1	Nut, pinnacle 5/16" B.S.F.	4	C
14	A79/500285	G00629	Bolt, special	8	
15	A79/500286	G00630	Pick up, hinge	4	
16	A79/501301	G0077	Fitting, front end	2	
17	A79/501302	G0078	Fitting, rear end	2	

Note : Items 10 to 17 are to be disposed of in accordance with current authorised procedure.

Method of Incorporation

7. Jack up the aircraft in order to raise the undercarriage wheels clear of the ground.

8. Refer to A.A.P.828 Section 5, paragraph 172 and Fig. 57 and remove the port main undercarriage leg as detailed therein, using special spanners (see para. 4).

9. Disconnect the hinge pick-up (item 15) from the front undercarriage diaphragm, retaining :

(a) The 4 lower bolts together with their respective nuts and washers.

(b) The 2, 3/8" B.S.F. bolts (part No. A15Y/5J) together with their respective washers.

10. Ream the 5/16" hole in the diaphragm to the required 3/8" size.

11. Replace the new hinge pick-up (item 6) using the 4 bolts, the 4 nuts and the 8 washers retained in para.9(a) to connect the lower part of the pick-up to the diaphragm and using the 2 bolts and the 4 washers retained in para.9(b) together with 1 new bolt (item 1), 2 new washers (item 2) and 3 new nuts (item 3) to connect the upper part of the pick-up.

12. Repeat in a similar manner for the hinge pick-up at the rear undercarriage diaphragm.

13. Remove the front end and rear end bearing fitting (items 16 and 17) from the main undercarriage leg and replace the new fittings (items 7 and 8).

14. Replace the main undercarriage leg, using 4 new bolts, (item 4) to secure the bearing fittings to the hinge pick-ups.

Note : Wire lock these bolts with 20 swg. soft iron wire, (item 9).

15. Repeat in a similar manner for the starboard leg.

16. Carry out retraction test.

17. Remove jacks from aircraft.

18. Record the modification in the airframe log book and on the wing modification plate.

Drawing

19. No drawing will be required.

Effect on Weight and Balance

20. The effect of the incorporation of this modification on the weight and balance of the aircraft is negligible.

References : Files R.A.A.F. 9/84/91, 150/4/8540
D.H. Aust. Mod. V124.
A.M. Mod. Vam.806
L.M.C. Meeting No. 26

Date of Issue : 29th July, 1953.

Air Force Head-Quarters

Technical Order

VAMPIRE MODIFICATION NO. 62

Application : Mk. 30
(See Paragraph 3)

Classification : Class 2.

G3F COMPASS - INTRODUCTION

Introduction

1. The Magnesyn Remote Indicating Compass as fitted to the earlier Vampire aircraft is insufficiently accurate for modern fighter aircraft navigation. This order introduces the G3F Gyro Magnetic Compass, which it is expected, will improve the standard of navigation possible in Vampire aircraft, and at the same time, allow for the deletion of the conventional indicator directional gyro. The directional gyro being replaced by the G3F Compass gyro unit.

2. This modification leaflet has been divided into two parts, viz:-

Part 1 - Installation of G3F Compass

Part 2 - Rework of interim scheme (Refer sub-paragraph 3 (b)).

Where modification sets are available, the work is to be incorporated concurrently with Vampire Modification No. 76 (Introduction of the Mk.3 Artificial Horizon).

General

3. (a) Part 1 of this modification is to be incorporated on all Vampire Mk. 30 aircraft not having the equivalent De Havilland Modification V.102 incorporated.

(b) Part 2 of this modification is to be incorporated in Vampire Mk. 31 aircraft not having incorporated the approved equivalent De Havilland Modification V.175.

(c) This modification is to be incorporated as follows:-

(i) Aircraft in use : To be determined by Air Force Head-Quarters.

(ii) Aircraft undergoing repair and inspection : To be determined by Air Force Head-Quarters.

General (Cont'd)

(iii) Spare parts : To be determined by Air Force Head-Quarters. Spares are : Wings VMS.147 & 152, Part No. 00D26A, A79/500241 is to be reworked to 00D26A/1, A79/501916. Fixed Fairing Aft of Nosewheel Part No. A00648A, A79/500556 is to be reworked to A00648A/1, A79/501861.

(d) No special tools are required.

(e) Man-hours : For Part 1, approximately 200 man-hours per aircraft.

(f) Man-hours : For Part 2, approximately 80 man-hours per aircraft.

(g) The trade mustering responsibility for the incorporation of this modification is Instrument Fitter, Electrical Fitter and Airframe Fitter.

PART 1.

Supply

4. The following parts will be required for Part 1 to complete one modification set:-

Item No.	Ident. No.	Part No.	Nomenclature	No. Off per A/c	Stores Class
1		00N369	Ring, reinforcing, ply 5/64" thick.	1	C
2	H28C/2424	AGS.244/15	Screw, 2BA x $\frac{3}{4}$" rd.hd. brass.	3	C
3	H28C/2419	AGS.244/23	Screw, 4BA x $\frac{5}{8}$" rd.hd. brass.	2	C
4	H28C/2425	AGS.244/24	Screw, 4BA x $\frac{3}{4}$" rd.hd. brass.	2	C
5	H28C/2856	AGS.245/12	Screw, 2BA x $\frac{5}{8}$" rd.hd. steel.	4	C
6	H28C/2868	AGS.245/14	Screw, 2BA x $\frac{5}{8}$" rd.hd., steel.	5	C
7	H28C/2863	AGS.245/22	Screw, 4BA x $\frac{1}{2}$" rd.hd., steel.	3	C
8	H28C/2808	AGS.249/12	Screw, 2BA x $\frac{5}{8}$" c's'k, steel.	2	C

Supply (Cont'd)

Item No.	Ident. No.	Part No.	Nomenclature	No. Off per A/c	Stores Class.
9	H28/6998	6A1/1C	Bolt, 2BA .5" O/AL x 0.1" P.P hex, L.T.S.	4	C
10	H28/7064 (O)	A25/4C	Bolt, 2BA x 0.4" long hex. L.T.S.	1	C
11	H28/7287 (O)	A25/18C	Bolt, 2BA x 1.8" long hex, L.T.S.	1	C
12	H28/7240 (Z)	6A1/1E	Bolt, $\frac{3}{4}$" BSF .55" O/AL x 0.1" P.P. hex, L.T.S.	4	C
13	H28/7298 (O)	A25/17E	Bolt, $\frac{1}{4}$" BSF 2.20 O/AL x 1.7" P.P. hex, L.T.S.	5	C
14		AS1885/2C	Bolt, 2BA x 0.2" long	8	C
15		00N471A	Box, junction, G3F compass	1	C
16	A79/501942	A005205A	Bracket, angle, top	1	C
17	A79/501940	A005191A	Bracket, assy., L.H.	1	C
18	A79/501941	A005192A	Bracket, assy., R.H.	1	C
19		00N379A	Bracket, mounting resolver unit	1	A
20	G105C/1868		Breaker circuit 10A	1	A
21	G6B/500055	HC500-1	Cable assy. junction box to amplifier	1	A
22	G6B/500056	HC500-1A	Cable assy., junction box to control panel	1	A
23	G6B/500057	HC500-1B	Cable assy., control panel to cockpit floor.	1	A
24	G6B/500058	HC500-1C	Cable assy., cockpit floor to inverter	1	A
25	G6B/500059	HC500-2	Cable assy., amplifier to B.F. panel.	1	A
26	G6B/500060	HC500-3	Cable assy., amplifier to resolver.	1	A
27	G6B/500061	HC500-4A	Cable assy., amplifier to plug sealing plate.	1	A
28	G6B/500062	HC500-4B	Cable assy., plug sealing plate to rib No.1.	1	A
29	G6B/500063	HC500-4C	Cable assy., Rib No.1 to detector	1	A
30	G6B/500064	HC500-5	Cable assy., amplifier to resolver.	1	A

Supply (Cont'd)

Item No.	Ident. No.	Part No.	Nomenclature	No. Off per A/c	Stores Class.
31	D E L E T E D				
32		OOD1111AMD	Channel assy.	1	
33		DHS.29/32	Clip, cable	2	
34	H28/26103	DHS.30/6	Clip, cable	4	C
35	H28/26104	DHS.30/7	Clip, cable	1	C
36		A007273	Clip, special	1	C
37		HC500-6	Cable assy., switch to amplifier	1	
38	G5C/12660		Switch, current isolating.	1	A
39		OOM393	Plate, switch mounting.	1	C
40			End, Hellermann No. 2 x $\frac{3}{4}$"	1	C
41	H28/26803	Z14485/2	Ferrule, cut, Breeze.	1	C
42	H28/26077	DHS.103 Mk.1	Ferrule, 4BA.	3	C
43	H28/26078	DHS.103 Mk.2	Ferrule, 2BA.	5	C
44		M981744	Gasket, paper, 2 off Mk.$\frac{4}{}$, 2 off Mk.5, 1 off Mk.2 and 1 off Mk.3.	6	C
45		OOM367MD	Insert, ply	1	C
46	G5U/4938	A005209AMD	Inverter Unit Type 100A.	1	A
47	A79/501839	OOM43 Mk.2	Label, compass	1	C
48		S001173MD	Nut, anchor, make AGS.2018/E/1	2	C
49		AS460/307	Rivet, 3/32" dia. x 7/16" long.	2	
50	H28/10288	AGS.2001/C1	Nut, 2BA.	7	C
51		AGS.2008/B/3	Nut, anchor, 4BA	1	C
52	H28/10216	AGS.2008/C/1	Nut, anchor, 2BA	4	C
53		OOM442AMD	Panel, control assy.	1	
54		OOM393	Plate, blanking	1	
55	A79/501939	A005197A	Plate, cover	1	C
56		OOM479AMD	Plate, mounting, amplifier.	1	
57		OOD860A	Plate, mounting, detector.	1	

Supply (Cont'd)

Item No.	Ident. No.	Part No.	Nomenclature	No. Off per A/c	Stores Class.
58		A005273ND	Plate, reinforcing, L.H.	1	
59		A005274ND	Plate, reinforcing, R.H.	1	
60		00N361	Plate, sealing, plug.	1	
61		CZ62275	Plug.	1	
62	H128F/61499	AS455/405	Rivet, 1/8" dia. x 5/16" long.	4	C
62A	H128F/62677	AGS.420B-S	Rivet pop. Alum. Alloy 1/8" dia x 2" long	4	—
63	H128F/62308	AS455/406	Rivet 1/8" dia. x 3/8" long.	2	C
63A	H128F/24113	AGS.244/22	Screw Brass, 4BA x 1/4" long	2	—
64	H128F/31627	AS2227/403	Rivet, 1/8" dia. x 3/16" long sn.hd.	34	C
			~~1/8" dia. x 1/4" long~~ Deleted AL57	~~6~~	~~C~~
			1/8" dia. x 5/16" sn.hd.	5	C
67	H128F/30269	AS[illegible]	1/8" dia. x 3/8" long, sn.hd.	2	C
68	H128F/62229	AS2229/303	Rivet, 3/32" dia. x 3/16" long, c's'k, 90°	2	C
69	H128F/5797	AS2230/303	Rivet, 3/32" dia. x 3/16" long, c's'k, 120°	8	C
70		00N478A	Seal, pressure for inverter cable.	1	C
71	G5A/500065	CZ27902	Socket, Breeze 5x/6014.	1	A
72	G6B/500037		Tray, mounting, resolver unit.	1	A
73		00D861ND	Tube, distance.	2	C
74		AS2806-4-031	Tube, distance.	1	C
75		AS2806-4-037	Tube, distance.	1	A
76	G6B/500027		Mk.G3 Compass Unit, amplifier.	1	A
77	G6B/500028		Mk.G3 Compass Unit, detector.	1	A
78	G6B/500030		Mk.G3F Compass Unit, resolver.	1	A
79	H128F/31374	S.P.1208	Washer, shakeproof.	3	C
80	H128F/59794	S.P.1210	Washer, shakeproof.	7	C
81	H28C/12305	S.P.13/B	Washer, 4 BA.	4	C
82	H28C/12252	S.P.13/C	Washer, 2 BA.	9	C
83	H28C/3071	AGS.160/C	Washer, 2 BA.	4	C

"64A - H28/27002 - AGS
Nut, Brass, 4BA

64B - H28C/12306 - SP.
Washer, Alum. Alloy. [illegible]

Supply (Cont'd)

Item No.	Ident. No.	Part No.	Nomenclature	No. Off per A/c	Stores Class.
84	H28C/35829	DHS.34B	Washer, 4 BA.	4	C
85	H28C/2649	AGS.253/20	Woodscrew, No.4 x ½" rd.hd. M.S.	5	C
86	H28C/2650	AGS.253/37	Woodscrew, No.6 x ½" rd.hd. M.S.	7	C
87	G6A/500063		Panel, blind flying complete with pipes.	1	A
88	G6B/500029		Mk.G3 Compass Unit, gyro.	1	A
89	H28C/2132	AGS.248/14	Bolt, 2BA x ⅜" long.	4	C
90		A32/B16	Bolt, 4 BA.	2	C
91	H28/10287	AGS.2001/ B/1	Nut, 4 BA.	2	C
92		A32/C16	Bolt, 2 BA.	4	C
93		A25/31E	Bolt, ¼" BSF.	2	C
94		N00117	Gasket, rubber.	1	C
95		00Z177MD	Plate, reinforcing.	1	C
96		6A1/3C	Bolt, 2 BA x 0.3" lg.	6	C
97		AS2229/405	Rivet, ⅛" dia. x 5/16" long.	3	C
98	K4/10880		Bostik 252	AR.	C
99	K4/10882		Bostik 1790	AR.	C
100	K4/10883		Bostik 1751	AR.	C

Notes: (a) Items 1 to 97 inclusive are to be delivered from De Havilland Aircraft Pty. Ltd. to Sub-modification Section No.2 Aircraft Depot where they are to be made into modification sets and used on demand against aircraft numbers.

(b) Items 98 to 100 inclusive are to be drawn from Unit Store.

Salvage

5. The following parts will be rendered redundant by the incorporation of Part 1 of this modification:-

Item No.	Ident. No.	Part No.	Nomenclature	No. Off per A/c	Stores Class.
101	G5C/996		Box Junction	1	A
102	G105C/1867		Breaker, Circuit, 5A	1	A

Salvage (Cont'd)

Item No.	Ident. No.	Part No.	Nomenclature	No. Off per A/c	Stores Class.
103		B00507A/1	Bracket, mounting, locking control.	1	
104		B00510A	Bracket, mounting locking control.	1	
105	H28C/2864	AGS.245/31	Bolt, 6 BA x ½" long, rd.hd., steel.	2	C
106		N00199A	Cable Assy., plug sealing, plate to distributor box.	1	
107		N00258A	Cable Assy., distributor box to R.H.Instrument panel.	1	
108		N00202A	Cable assy., distributor box to indicator.	1	
109		N00200A	Cable assy., plug sealing plate to rib No. 1.	1	
110		N00452A	Cable assy., Rib No.1 to terminal block.	1	
111		N00453A	Cable assy., terminal block to transmitter.	1	
112		D00322LAND	Channel assy.	1	
113	H28C/2863	AGS.245/22	Bolt, 4 BA x ½", rd.hd. steel.	2	C
114	H28C/35826	DHS.33 Mk.1	Washer	2	C
115	H28/10042	No.81/2	Clip, Terry	1	C
116					
117					
118	G5A/27687	5K/2374 or 50003	Disc, blank	1	C
119	G106A/50083 or	50002	Indicator, R.I. compass.	1	A
120	G106A/50528	867 50373	Indicator, R.I. compass.	1	A
121	A79/501527	00N43	Label, R.I. compass.	1	A
122	H28/10286	A.P.1	Nut, Simmonds, 6 BA.	6	C
123	H28/26078	DHS.103 Mk.2	Ferrule, 2 BA.	2	C
124	H28/10289	C.A.1	Nut, Simmonds, 2 BA.	2	C
125	H28/10288	C.P.1	Nut, Simmonds, 2 BA.	7	C

Salvage (Cont'd)

Item No.	Ident. No.	Part. No.	Nomenclature	No. Off per A/c	Stores Class.
126	H28/754	A16Y/BT	Nut, 4 BA.	1	C
127	H28/10287	AGS.2001/B1	Nut, 4 BA.	1	C
128	G5A/27686	5K/87	Nut, gland	1	C
129		B00530	Plate, attachment.	1	
130		D006915A	Plate, mounting, transmitter.	1	
131		00N107/1	Plate, plug sealing.	1	
132		5X/68	Plug, breeze.	1	
133	H128F/30267	AS2227/404	Rivet, $\frac{1}{8}$" dia. x $\frac{1}{4}$" long an.hd.	10	C
134		B00273A	Sub assy., inverter, suppressor and junction box.	1	
135		P98300	Tag, chain.	1	
136	G106A/50547 or 1124, 866,	106A/866 50218	Transmitter, R.I. compass.	1	A
137		D006917ND	Tube, distance	1	
138		D006919ND	Tube, distance	1	
139		B00705ND	Tube, distance	3	
140	H28C/3071	AGS.160/C	Washer, 2 BA.	13	C
141	H28C/3081	AGS.161/C	Washer, 2 BA.	2	C
142		AS470/C	Washer, 2 BA.	3	
143	H28C/35829	DHS.34B	Washer. 4 BA.	4	C
144	H128F/59794	1210	Washer, shakeproof.	2	C
145	H28C/2324	AGS.252/41	Woodscrew, No.6 x 1" rd.hd. brass.	1	C
146	G6A/500014 or		Panel, blind flying, c/w pipes.	1	A
147	G6A/3675		Panel, blind flying, c/w pipes.	1	A
148	G6A/602		Indicator, directional	1	A
149		AN505B/632-18	Screws.	4	C
150	H28C/2868	AGS.245/14	Bolt, 2 BA x $\frac{3}{8}$" rd.hd. steel.	7	C

Salvage (Cont'd)

Item No.	Ident. No.	Part No.	Nomenclature	No. Off per A/c	Stores Class.
151	H28C/2876	AGS.245/33	Bolt, 6 BA x $\frac{3}{4}$" rd.hd. steel.	4	C
152	H28C/2090	AGS.246/16	Bolt, 2 BA x $\frac{7}{8}$" ch.hd. brass.	3	C
153		6A1/18B	Bolt, 4 BA x 1.8" long, hex. L.T.S.	1	C
154	H28/7177	6A1/15C	Bolt, 2 BA x 1.5" long, hex. L.T.S.	3	C
155	H28/7638	6A1/20C	Bolt, 2 BA x 2.0" long, hex. L.T.S.	3	C
156		A17/4B	Bolt, 4 BA x 0.4" long, hex.	2	C
157		A17/6B	Bolt, 4 BA x 0.6" long, hex.	1	C
158	H28/10422	AS1882/16E	Bolt, $\frac{1}{4}$" BSF x 1.6" long	5	C
159	H28/10005	AS1884/1C	Bolt, 2 BA x 0.1" long	2	C
160		N00117	Gasket, rubber.	1	C
161		00B27	Plate, blanking.	1	C
162		S00660	Bolt, special.	2	C
163		6A1/2C	Bolt, 2 BA x .2" long, hex.	6	C

Note: (a) Items 101, 102, 105, 113 to 115, 122 to 127, 135, 140 to 145, 149 to 159, 162, 163 are to be examined and if serviceable to be returned to stock.

(b) Items 103, 104, 106 to 112, 121, 128 to 131, 133, 137 to 139, 160 and 161 are to be disposed of in accordance with current authorised procedure.

(c) Items 118 to 120, 132, 134, 136 and 148 are to be held until all aircraft are modified, and then returned to stores.

(d) Item 146 or 147 is to be returned to appropriate T.I.R.S. for salvage of parts, or to be reworked to G6A/500063.

METHOD OF INCORPORATION OF PART '1' - NOSEWHEEL HOUSING:

6. Refer Australian Air Publication 828, section 12, paragraphs 314 and 315, and remove the two inboard guns as detailed therein.

7. Temporarily remove the two inboard front mounting castings from the cannon beam. Retain all attachments.

8. Refer drawing A.12138, sheet No.4. Locate the fixed fairing aft of the nosewheel door and attach the top angle bracket (item 16) to the cockpit floor, in the position shown, with the six existing bolts. Apply Bostic 252 - K4/10880 between the ends of the angle and the side plates and Bostic 1790 & 1751 (K4/10882-3) to pressurise.

9. With the angle thus secured, fit the cover plate (item 55) to the angle and mark off the position of the four holes in the front angle of the fixed fairing.

10. Remove the cover plate and drill four No.11 holes in the fixed fairing. Note that the two outboard holes are existing 3/16 inch tooling. Rivet four anchor nuts (item 52) to the aft face of the fixed fairing angle, using eight rivets (item 69).

Alter the Part No. of the fixed fairing A00648A to read A00648A/1.

11. Position the two new reinforcing plates (items 58 and 59) on the inboard face of each side plate as shown. Mark off and rivet both plates to the nosewheel housing using 34 rivets (item 64)

12. Cut a 2 inch diameter hole in each nosewheel housing side plate to line up with the existing holes in the reinforcing plate. Alter the Part Nos. of the side plates A001079-80A to read A005271-2A.

13. Locate on the outboard face of each side plate the five rivets holding the fixed fairing to the nosewheel housing and carefully drill out the second and third rivets, (item 133) counted from the rear.

14. Position the two new brackets assemblies (items 17 and 18) and rivet as shown, using two rivets (item 66), two rivets (item 67), two rivets (item 63) and four rivets (item 62).

Note: Before riveting the two brackets, reverse the two lower bolts securing the nosewheel housing to the cannon boom, in order to obtain sufficient clearance.

15. Connect the cable (item 24) to the G3F inverter and pass the other end of the cable through the 2 inch diameter hole in the starboard side plate. Then position the inverter complete with support plate (item 46) and attach to the new brackets using four bolts (item 9). In cases where the inverter support plates are provided with elongated holes, also use four washers (item 83).

16. Attach the cover plate to the top angle bracket and the fixed fairing, using eight bolts (item 14) and apply an approved compound to render waterproof.

17. Fit an anchor nut (item 48) on the top inboard corner of each cannon mounting casting using two rivets (item 49). Replace the cannon mountings using the original attaching parts, but replace the bolt at the top inboard corner with new bolt (item 93) assembled with its head to the rear. Discard the redundant bolts (item 162).

18. Protect the cable, where it passes through the nosewheel housing side plate with nylex tape, and attach the cable to the fuselage side with four clips (item 34) and screws (item 86).

COCKPIT FLOOR AND INSTRUMENT PANELS:

19. Remove the pilot's seat in accordance with current authorised procedure. Locate the R.I. compass inverter, distribution box and suppressor on the cockpit floor, just forward of the R.H. instrument panel.

20. Disconnect and discard the cables running from the distribution box to the indicator on the R.H. instrument panel (item 108) and from the distribution box to the earthing on the R.H. panel (item 107).

21. Disconnect Loom C3 from the distribution box and the suppressor and temporarily disconnect the cable connections from the voltage compensator, which is mounted on top of the suppressor and distribution box. Also disconnect the cable leading to the plug in bulkhead No.2.

22. Unscrew the three bolts (item 150) and washers (item 140) and remove the complete sub-assembly (item 134) together with the voltage compensator. Discard the chain tag (item 135) connected to the base plate.

23. The voltage compensator is to be dismounted from the assembly. Discard the three bolts (item 155), nuts (item 125) washers (item 140) and distance tubes (item 139).

24. Refer drawing A.12138, sheet No.6 and drill four No.11 holes in the voltage compensator base plate as shown. Alter the Part No. of the assembly B00707AND to read 00N440AND and mount the reworked compensator on top of the new G3F compass control panel (item 53), using four bolts (item 5) and four washers (item 80).

25. Refer drawing A.12138, sheet No.6 and position the four new ferrules (item 43) to agree with the dimensions shown therein. Remove the two existing ferrules (item 123) in the way of the hole as shown on the drawing. Plug the holes. Drill a hole 1.13/16 inch through the cockpit floor. Cut away the top ply and balsa wood around the hole until a 3.2 inch diameter is obtained, but leave the bottom ply. Fit the ply insert ring (item 45) in the hole and glue it to the supporting bottom ply and the sides of the hole. Position the reinforcing ring (item 1) over the ply insert ring and glue to the top skin.

26. Alter the Part No. of the R.H. cockpit floor half A001502A/1 to read A001502A/2.

27. Position the pressure seal for the inverter cable (item 70) over the 1.13/16 inch hole. Spot through eight No.27 holes and connect with the bolts and nuts supplied with the pressure seal. Apply Bostic 1751 and 1790 (K4/10882-3).

28. Attach the G3F control panel together with the voltage compensator (see paragraph 24) to the four ferrules, using on the inboard side two bolts (item 6), two washers (item 80) and two washers (item 82) and on the outboard side two bolts (item 8) and clip (item 36).

29. Reconnect the cables to the voltage compensator, temporarily disconnected in paragraph 21.

30. Connect the inverter cable (see paragraph 18) underneath the cockpit floor to the Breeze plug in the pressure seal.

31. Assemble the new cable (item 23) to the plug in the pressure seal and with its other end to the control panel in accordance with the wiring diagram (A.12138, sheet No.8).

32. Locate the R.I. compass indicator on the R.H. Instrument Panel (item 119 and 120), remove and discard together with its mounting screws and nuts.

33. Fit the blanking plate (item 54) over the redundant hole using three new screws (item 6) and nuts (item 50).

34. Remove the blind flying panel in accordance with current authorised procedure. Disconnect all instruments from the panel and discard the bare panel together with its pipes (items 146 or 147). Also discard the directional gyro indicator and its attaching parts (items 148 and 149). Assemble the instruments retained to the new panel (item 87).

Also fit the new G3F gyro compass (item 88) with screws (item 89).

35. Locate and remove the blanking plate on the top centre instrument panel, just above the fuel pressure warning light. Discard the blanking plate (item 161), the four bolts (item 150) and the four nuts and washers (items 125 and 140). (Refer drawing A.12138, sheet 8).

36. Fit the current isolating switch (item 38) to its mounting plate (item 39) using attaching parts (items 90, 91 and 81). Take care that the switch toggle points downwards when in the 'on' position.

37. Attach the switch together with its mounting plate in lieu of the removed blanking plate using attaching parts (items 92, 52 and 82).

38. Replace the blind flying panel and incorporate the following alterations. Cut the 18 inch long hose on the portside of the B.F.P. 'Y' junction back to a length of 6½ inches.

Alter the Part No. of the hose Q00208IND to read 00Q15IND.

BULKHEAD NO. 2:

39. Open the ammunition doors. Remove the control column and rudder pedals control locking gears from bulkhead No. 2 in the cockpit.

40. Disconnect the column locking control mounting bracket (item 103) and the Terry clip (item 115) together with all attaching parts (items 153, 154, 114, 124, 127, 141 and 143).

41. Also remove the rudder control mounting bracket and attachment plate (items 104 and 129). Discard all attaching parts (items 159, 144 and 145) but replace the bolts, nuts and washers which also fasten the plug sealing plate at the portside. Fill up all redundant holes.

42. Rework the spanner for the filler cap, Part No. Y00162A which is mounted on bulkhead No.2 by cutting 2 inches out of the middle and welding the two halves together.

43. Refer drawing A.12138, sheet 3 and position the new 2 BA ferrules (item 43) and the three 4 BA ferrules (item 42) on the forward face of bulkhead No.2 in accordance with the dimensions shown. Trim the 2 BA ferrule to suit the armour plate.

44. Unscrew and discard the two inboard bolts (item 158) holding the upper end of the starboard armour plate to the bulkhead.

45. Fit the resolver unit mounting bracket (item 19) to the armour plate and the 2 BA ferrule using two bolts (item 13) one bolt (item 10), washer (item 80) and distance tube (item 75).

46. Secure the resolver unit (item 78) together with its mounting tray (item 72) to the bracket using four bolts (item 12).

47. The G3F compass junction box (item 15) is to be attached to the three 4 BA ferrules with bolts (item 7) and washer (item 79).

48. Remove and discard the three bolts holding the upper part of the portside armour plate to the bulkhead (item 158). Also remove from the plug sealing plate on the portside the bolt nearest to the armour plate (item 154). Retain the nut and washer.

49. Position the amplifier mounting plate (item 56), trim the wooden packing, outboard of the plug sealing plate, to suit, and secure to the armour plate with three bolts (item 13) and to the plug sealing plate using one bolt (item 11), distance tube (item 74) and the original nut and washer.

50. Attach the amplifier unit to its mounting plate (item 76).

51. Refer drawing A.12138, sheet 7 and locate the plug sealing plate on the starboard side of bulkhead No.2 just above the cockpit floor.

52. Gaining access to the rear face through the gun bay doors, temporarily disconnect the four conduits and the three plugs. Discard the lower plug (item 132) together with its attaching parts (items 151 and 122).

53. Remove the plug sealing plate (item 131) and the rubber gasket (item 160) from the bulkhead and replace by the new plate (item 60) and a new gasket (item 94) using the original attaching parts.

54. Replace the four conduits and the two plugs using new paper gaskets (item 44) which are to be treated with "Polon" varnish on both faces.

55. Fit the new plug (item 61) which is to be attached with the mounting flange.

Note: (a) Apply Bostic 1751 and 1790 (K4/10882-3) where pressure sealing is required.

(b) For repositioning of the control locking gear, refer D.H. Aust. I.L. 213, Part 'B'.

MAINPLANE:

56. Drain and remove the wing fuel tanks from the starboard wing in accordance with current authorised procedure.

57. Open the R.I. access door in the bottom skin and disconnect the R.I. transmitter (item 136) from the mounting plate and the cable. Then remove the mounting plate and discard all parts (items 153, 156, 157, 130, 137, 138, 142 and 143).

58. Refer drawing A.12138, sheet No.1 and carefully drill out the ~~six~~ Four rivets (item 133) holding the channel assembly (item 112) to the mounting structure.

59. Fit the new channel assembly (item 32) to suit the detector mounting plate as shown on the drawing using six rivets (item 6[illegible] and five (2) screws, nuts and washers, items 63A, 64A & 64B

60. Assemble the anchor nut (items 51 and 68) to the structure to line up with the detector mounting plate.

61. Locate the R.I. transmitter terminal block on the main spar, disconnect the cable entries. Remove the terminal block and discard all parts (items 111, 101, 105, 113, 118, 122, 126 and 128).

62. Follow through and remove the cable leading from the junction box to the plug on rib No.1. To gain sufficient access to the cable, remove the two rear access doors in the wheel well. Discard the cable (item 110).

63. Fit the new detector mounting plate (item 57) using attaching parts (items 3, 4, 73, 81 and 84).

64. Attach the cable (item 29) to the detector unit (item 77) and attach the detector to its mounting plate (items 2 and 82).

65. Refer drawing A.12138, sheet 8. Pass the cable through the lightening hole in the main spar. Leave the cable sufficiently slack to allow the detector unit to be removed. Tie the cable to the existing conduit and pass the cable through the respective ribs as shown on the drawing. Use nylex tubing where the cable passes through lightening holes and whip to the existing cable run.

66. Refer drawing A.12138, sheet No.2. Rework the 25/32 inch hole in the front plate of rib No.1, provided for the original cable run, to the dimensions shown.

67. Attach the fuselage end of the detector cable in the new hole by means of the locking ring on the socket.

68. Alter the external markings on the compass access door to read "compass detector inside".

Alter the Part No. for the spare wing OOD26A to read OOD26A/1.

FURTHER ELECTRICAL MODIFICATIONS:

69. Remove the top engine cowling. Cut the existing R.I. compass cable assembly leading from rib No.1 through the fireproof bulkhead to bulkhead No.2, close to the fireproof bulkhead and discard the cable (item 109).

70. Connect the new cable (item 28) to the new plug on bulkhead No.2. Whip the cable to the existing ones.

71. Refer A.12138, sheet No.5. Locate the flanged bulkhead union shown on the L.H. lower half of the fireproof bulkhead.

72. Disconnect the connections and temporarily disconnect the union from the bulkhead. Discard the six bolts (item 163) but retain the nuts and washers.

73. Position the reinforcing plate (item 95) as shown. Mark off and cut the fireproof bulkhead to suit. Rivet the reinforcing plate to the bulkhead and pass the fuselage cable through as shown. Replace the union using six new bolts (item 96) and the original nuts and washers. Reconnect the pipelines.

74. Connect the plug end of the cable to the socket on the detector cable on rib No.1 (see paragraph 67).

75. Remove and discard the cable (item 106) which was connected to the R.I. compass distribution box and to the plug sealing plate.

76. Attach the new cable (item 27) to the new plug in the sealing plate. Run the cable with the existing ones along the fuselage side upwards and connect to the amplifier in accordance with A.12138, sheet 8.

77. Locate loom C3, Part No. NOO1051A, in the cockpit. Disconnect the loom from plug C3 on the junction box &c., and temporarily remove it from the aircraft.

78. Rework the loom as follows:-

Cut the whip which holds the leads together and disconnect the R12 core from pin T on plug C3. Discard the lead. Connect a new AM16 core, code GC2, 35 inch long to pin T. Assemble on the other end of the

lead one ferrule (item 41), one Hellermann end (item 40) and a breeze socket (item 71). Tie the cable with a new string. Alter the Part No. of loom C3 to read OON439A.

79. Assemble the loom in the aircraft connecting the new lead to the compass control panel.

80. Remove the front cover from junction box No.1.

81. Disconnect and discard the 5A compass circuit breaker (item 102) indicated by the compass label.

82. Follow through and remove the AN18 core, code R12, from the circuit breaker to pin T on plug C3. Fit a new AN16 core, code G02, and a new 10A circuit breaker (item 20).

83. Replace the front cover. Remove the old compass label (item 121) from the junction box and attach the new label (item 47) with the existing screws.

Alter the Part No. of the J.B. complete to read OON13A/2.

84. Connect the earthing cable, running from the new control panel, to the earthing bolt on the R.H. instrument panel.

85. Connect cable (item 22) to the control panel and fasten the cable to the fuselage side together with the earthing cable using clip (item 35) and screw (item 85). Attach cables (item 25 and item 37) to the gyro unit on the blind flying panel and to the current isolating switch respectively. Run the three cables together along the fuselage side behind J.B. No.1 and whip to the existing cables. Attach the other ends of the cables to the G3F junction box and amplifier in accordance with the wiring diagram.

86. Interconnect the amplifier and resolver unit with cables (item 26 and 30) as shown on drawing A.12138, sheet 8, and interconnect the amplifier and junction box with the cable (item 21).

87. Secure all the cables behind the pilot's seat to the bulkhead using two clips (item 33) and four screws (item 85).

88. Replace the engine cowling, the guns and the pilot's seat. Close all access doors. Test the cabin pressure and all electrical services in accordance with current authorised procedure.

89. Check the new G3F compass for correct functioning.

90. Record the modification in the Airframe Log Book and on the Wing Mod. Plate.

PART '2' - MODIFICATION OF INTERIM SCHEME

Supply

91. The following parts will be required for Part '2' to complete one modification set:-

Item No.	Ident. No.	Part No.	Nomenclature	No. Off per A/c	Stores Class.
164	Y10H/~~19087~~ Z560180	CZ49126	Socket, free, 12 way	2	A
165	Y10H/Z560850	CZ56745	Socket coupler 12 way	1	A
166	Y10H/Z560~~8~~80	CZ49458	Plug, free, 12 way	3	A
167	Y10H/~~19090~~ Z970065	CZ49182	Outlet assy., straight	~~1~~ 5	A
167A	Y10H/Z970072	CZ49183	Outlet assy., 90 ANGLE	1	A
168	Y10H/Z970059	Z60668	Gasket, outlet	6	A
169	Y10H/Z970084	Z49137	Ferrule, inner	6	A
170	Y10H/Z970083	Z49138	Ferrule, outer	6	A
171	Y10H/Z970091	Z62231	Ring, sealing	6	A
172	Y10H/Z970115	OON478A	Seal, pressure, for inverter cable	1	A
173	Y10H/19481	CZ62275	Plug, breeze, type	1	A

Note: Items 164 to 173 inclusive are to be delivered from De Havilland Aircraft Pty. Ltd. to the Sub-modification Section No.2 Aircraft Depot, where they will be made up into modification sets and issued on unit demand.

Salvage

92. The following parts will be rendered redundant by the incorporation of Part '2' of this modification:-

Item No.	Ident. No.	Part No.	Nomenclature	No. Off per A/c	Stores Class.
174	H28/7382	6A1/12B	Bolt, 4 BA x 1.2" long hex.	8	C
175	H28/10287	AGS.2001/ B/1	Nut, stiff, 4 BA	8	C
176	H28C/12305	SP13/B	Washer, 4 BA	8	C
177	H28C/35826	DHS.33 Mk. 1	Washer, shrinkage	16	C
178		OON476ND	Gasket	1	C
179		AGS.245/30	Bolt, 6 BA x $\frac{3}{8}$" long, rd.hd.	6	C
180		AGS.2001/ A/1	Nut, stiff, 6 BA	10	C

Salvage (Cont'd)

Item No.	Ident. No.	Part No.	Nomenclature	No. Off per A/c	Stores Class.
181	G5C/868		Block, terminal	2	A
182	H28C/2816	AGS.249/31	Bolt, 6 BA x ½" long, csk.	4	C
183		OON491	Fairlead	1	
184		OON487A	Ferrule, seal. assy.	2	
185		OON490	Gasket, sealing	2	
186		OON477ND	Plate, sealing	1	

Notes: (a) Items 174 to 177, 179, 180, 181, 182 are to be examined and to be returned to stock if serviceable.

(b) Items 178, 183 to 186 are to be disposed of in accordance with current authorised procedure.

METHOD OF INCORPORATION FOR PART '2':

93. Locate the sealing ferrule on the cable run from the C3F control panel to the inverter unit, where the cables pass through the cockpit floor.

94. Disconnect the eight bolts holding the sealing ferrule to the cockpit floor and discard the bolts (item 174), the nuts (item 175) and the washers (items 176 and 177).

95. Temporarily remove the complete cable from the aircraft by disconnecting it from the control panel and the inverter unit.

96. Cut the cable where it passes through the sealing ferrule and discard the sealing ferrule together with the attaching parts (item 184, 185, 178, 179 and 180).

97. The two cable halves retained in paragraph 92 are to be reworked, to HC500/1B to G6B/500057 and HC500/1C to G6B/500058.

To do this, fit a socket (items 164, ~~167~~ 168 to 171) to the bare end of the cockpit half of the cable. Connect the twelve leads to the pins in accordance with the following scheme:- PA 136

Pin Reference	Cable Core Colour
A	Red
B	Blue
C	Dark Green
D	Yellow
E	White
F	Black
G	Brown

Pin Reference	Cable Core Colour
H	Mauve
J	Orange
K	Pink
L	Light Green
M	Natural

Mark the cable with Part No. HC500/1B.

98. Fit a plug (items ~~106 to 111~~ 166, 167A TO 171 AL 36) to the bare end of the inverter half of the cable. Connect the cores to the pins in accordance with paragraph 97 and mark the cable assembly with Part No. HC500/1C.

99. Assemble the new pressure seal (item 172) to the cockpit floor as detailed in paragraph 27 of this instruction leaflet.

100. Connect the two reworked cable assemblies to the control panel and the pressure seal end to the inverter unit and the pressure seal as detailed in paragraphs 18, 30 and 31.

101. Locate the cable run from the amplifier unit through bulkhead No.2 and the fireproof bulkhead to the terminal block in rib No.1.

102. Unscrew the sealing ferrule on the cable from the plug sealing plate in bulkhead No.2. Cut the cable, where it passes through the ferrule. Discard the ferrule together with its attaching parts (items 184, 185, 179, 180).

103. Fit the new plug (item 173) on the sealing plate as detailed in paragraph 53.

104. Fit a new socket (items ~~164, 167 to 171~~ 165 TO 171 AL 36) to the cable end in the cockpit. Connect up each core as detailed in paragraph 95 and mark the cable assembly with Part No. HC500/4A - G6B/500061.

105. Similarly connect a plug (items ~~166 to 171~~ 167, 168 TO 171 AL 5) to the cable end at the rear face of bulkhead No.2 and attach both ends to the new plug on the plug sealing plate.

106. Locate the terminal blocks on rib No.1. Disconnect the cable entries. Remove and discard the terminal blocks and the fairlead (items 179 to 183).

107. Rework the end of the fuselage cable by fitting a new plug (items ~~166 to 171~~ 167, 168 TO 171) in accordance with paragraph 95.

108. Gaining access through the wing, tank door, attach the coupler socket (items 165, ~~167~~ 168 to 171) to the detector cable.

109. Rework the 25/32 inch hole in rib No.1 to drawing A.12138, sheet 2 and attach the coupler socket in the hole in accordance with paragraphs 66 and 67. Connect both cables together.

110. Mark the cable running from bulkhead No.2 to rib No.1 with Part No. HC500/4B - G6B/500062 and the detector cable with Part No. HC500/4C - G6B/500063.

111. Record the modification in the Airframe Log Book. Test the cabin pressure and the G3F compass installation.

Drawings

112. Drawing A.12138, sheets 1 to 8 are attached.

Effect on Weight and Balance

113. The effect of the incorporation of this modification on the weight and balance of the aircraft is as follows:-

(a) Redundant Parts

Item	Weight (lb.) ±	Arm (in.) ±	Moment (lb.in) ±
Indicator	- 0.75	- 88.00	+ 66.00
Transmitter	- 2.75	+ 20.00	- 55.00
Inverter	- 1.50	- 88.00	+ 132.00
Suppressor	- 1.00	- 90.00	+ 90.00
Junction Box	- 0.50	- 92.00	+ 46.00
Directional Gyro	- 3.75	- 90.00	+ 337.50

(b) New Parts:

Detector	+ 3.25	+ 20.00	+ 75.00
Amplifier & Mounting	+ 8.625	- 52.00	- 448.50
Resolver	+ 4.50	- 52.00	- 234.00
Control Panel	+ 5.00	- 90.00	- 450.00
Inverter	+ 6.00	- 76.00	- 456.00
Gyro Unit	+ 6.50	- 90.00	- 585.00
Junction Box	- 1.25	- 51.00	- 63.75

References : Files R.A.A.F. 9/84/203 and 150/4/8544
D.H. Aust. Mod. V.102
D.H. Aust. Mod. V.175
D.H. Aust. I.L. 216
A.M. Mod. VAM. 668
L.M.C. Meeting No. 22
D.H. Aust. E.O.I. 2128

Attachment : Drawing A.12138 sheets 1 to 8.

Date of Issue : 30th March, 1954.

DO NOT SCALE

ISSUE NO	DATE	ALTERATION	D. I. C.	INITIALS	APPROVED
1					
2	15.10.56	Amended to conform to AL.96.			

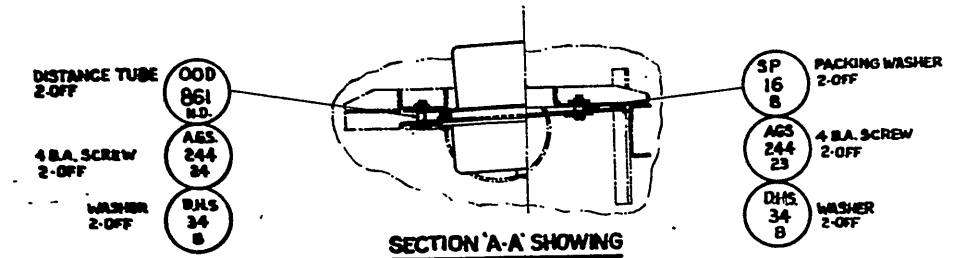

SECTION 'A-A' SHOWING ATTACHMENT OF MTG. PLATE TO STRUCTURE

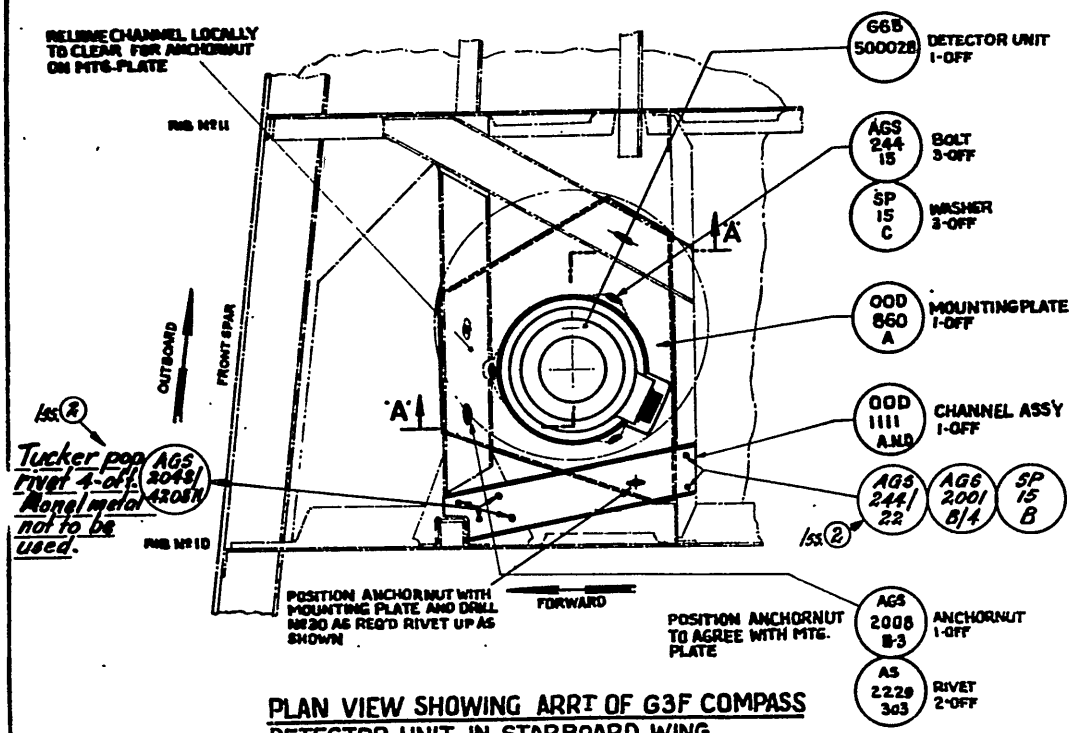

PLAN VIEW SHOWING ARRT OF G3F COMPASS DETECTOR UNIT IN STARBOARD WING
(TOP SKIN REMOVED)

DE HAVILLAND DRG. Nº OOM 216 SHEET Nº 1 OF 8 SHEETS

REFERENCE	ISSUED BY	TITLE
	Directorate of Technical Services. R.A.A.F.	INSTALLATION OF G3F COMPASS

LIMITS UNLESS STATED		MATERIAL		COMPONENT OF	
DECIMALS	± .010"	SPEC.		MACHINE	Vampire
FRACTIONS	± 1/32"	TREATMENT		ENGINE	
ANGLES	± ½°	FINISH		TECH. ORDER	Vampire Mod. No. 62
SURFACE FINISH AUSTRALIAN STANDARD ENG DRWG. PRACTICE A.S.C21		SCALE		DRAWING NO.	A12138 Sht. 1 of 8 Sheets
		DRAWN	APPROVED		DRWG. A SIZE
		TRACED	CHECKED		

DO NOT SCALE

ISSUE NO	DATE	ALTERATION	B. I. L.	INITIALS	APPROVED

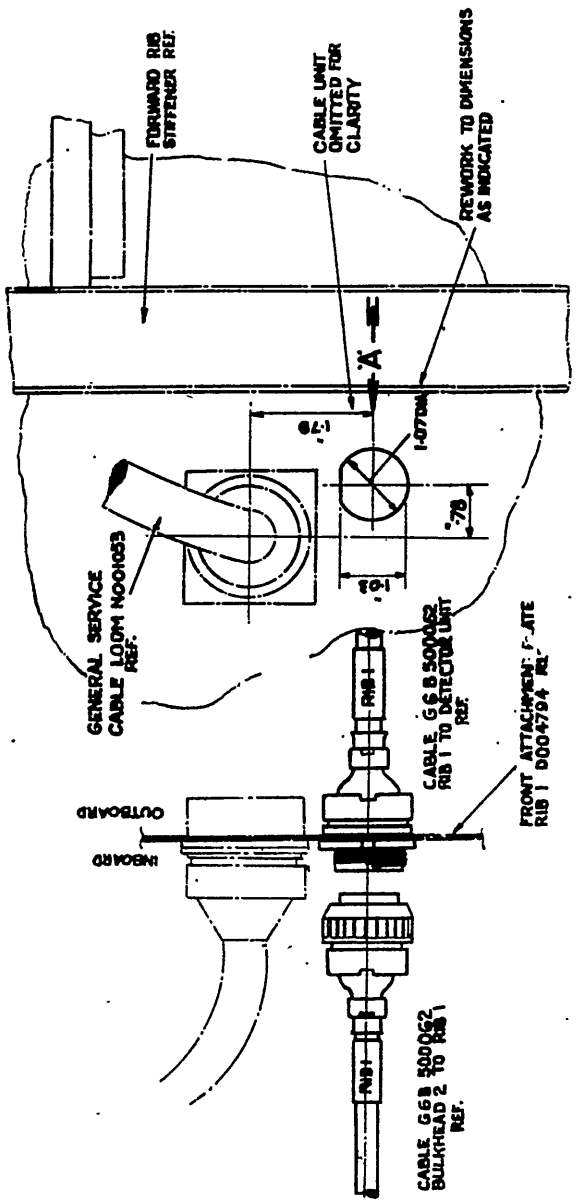

VIEW SHOWING ATTACHMENT AND REWORK ON RIB 1 STARBOARD

DE HAVILLAND DRG Nº OOM216 SHEET Nº 2 Nº OF SHEETS 6

REFERENCE	ISSUED BY	TITLE
	Directorate of Technical Services. R.A.A.F.	INSTALLATION OF G3F COMPASS

LIMITS UNLESS STATED		MATERIAL		COMPONENT OF	
DECIMALS	± .010"	SPEC.		MACHINE	Vampire
FRACTIONS	± 1/32"	TREATMENT		ENGINE	
ANGLES	± ½°	FINISH		TECH. ORDER	Vampire Mod. No. 62
SURFACE FINISH AUSTRALIAN STANDARD ENG. DRWG. PRACTICE A.S.E.27		SCALE		DRAWING NO.	A12138 6 sheets DRWG. A
		DRAWN	APPROVED		
		TRACED	CHECKED		

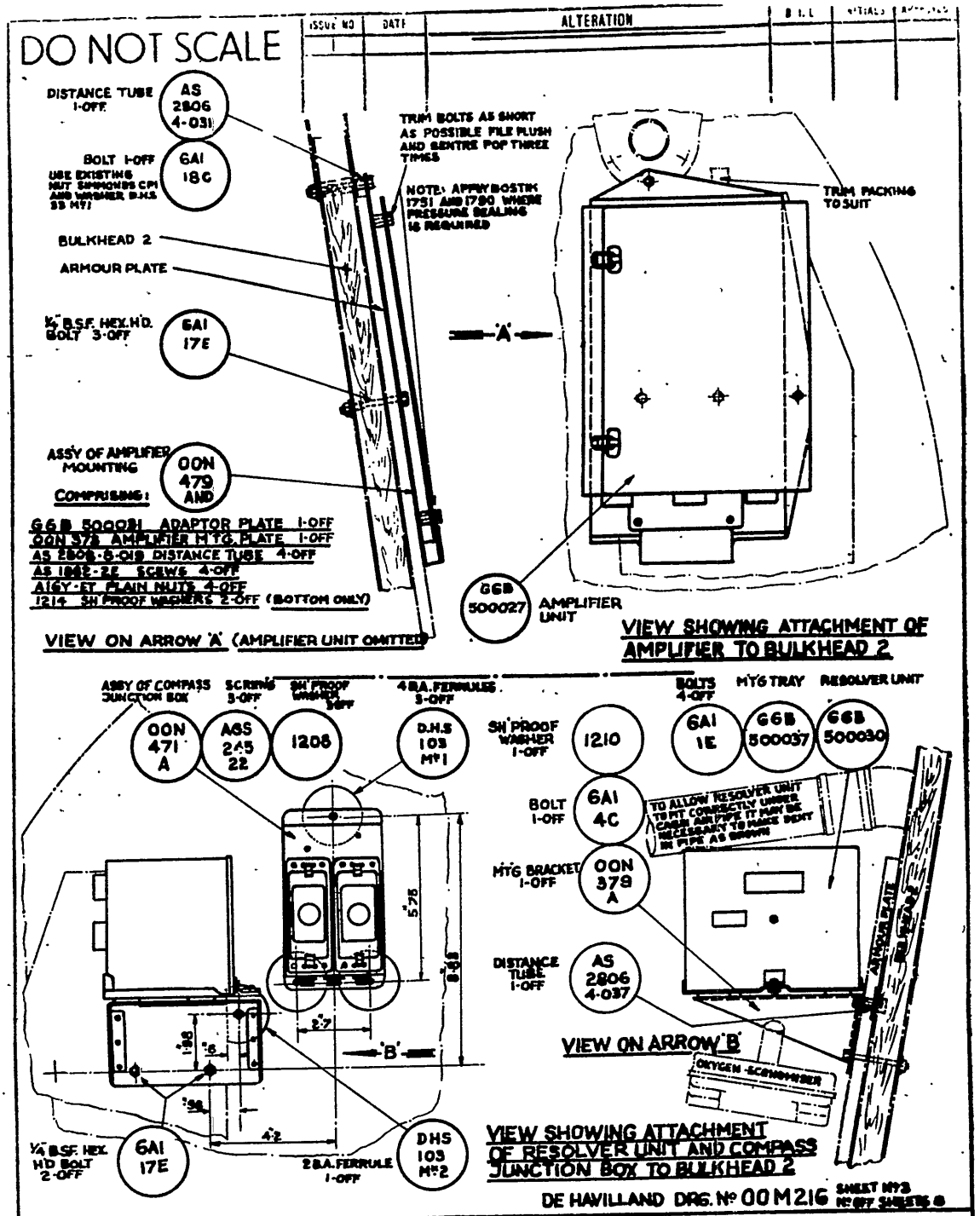

REFERENCE	ISSUED BY	TITLE
	Directorate of Technical Services. R.A.A.F.	INSTALLATION OF G3F COMPASS

LIMITS UNLESS STATED		MATERIAL		COMPONENT OF	
DECIMALS	± .010"	SPEC.		MACHINE	Vampire
FRACTIONS	± 1/32"	TREATMENT		ENGINE	
ANGLES	± ½°	FINISH		TECH. ORDER	Vampire Mod. No. 62
SURFACE FINISH AUSTRALIAN STANDARD ENG DRWG. PRACTICE A.S.E.21		SCALE		DRAWING NO.	A12138 Sht 3 of 8 Sheets — DRWG. SIZE A
		DRAWN	APPROVED		
		TRACED	CHECKED		

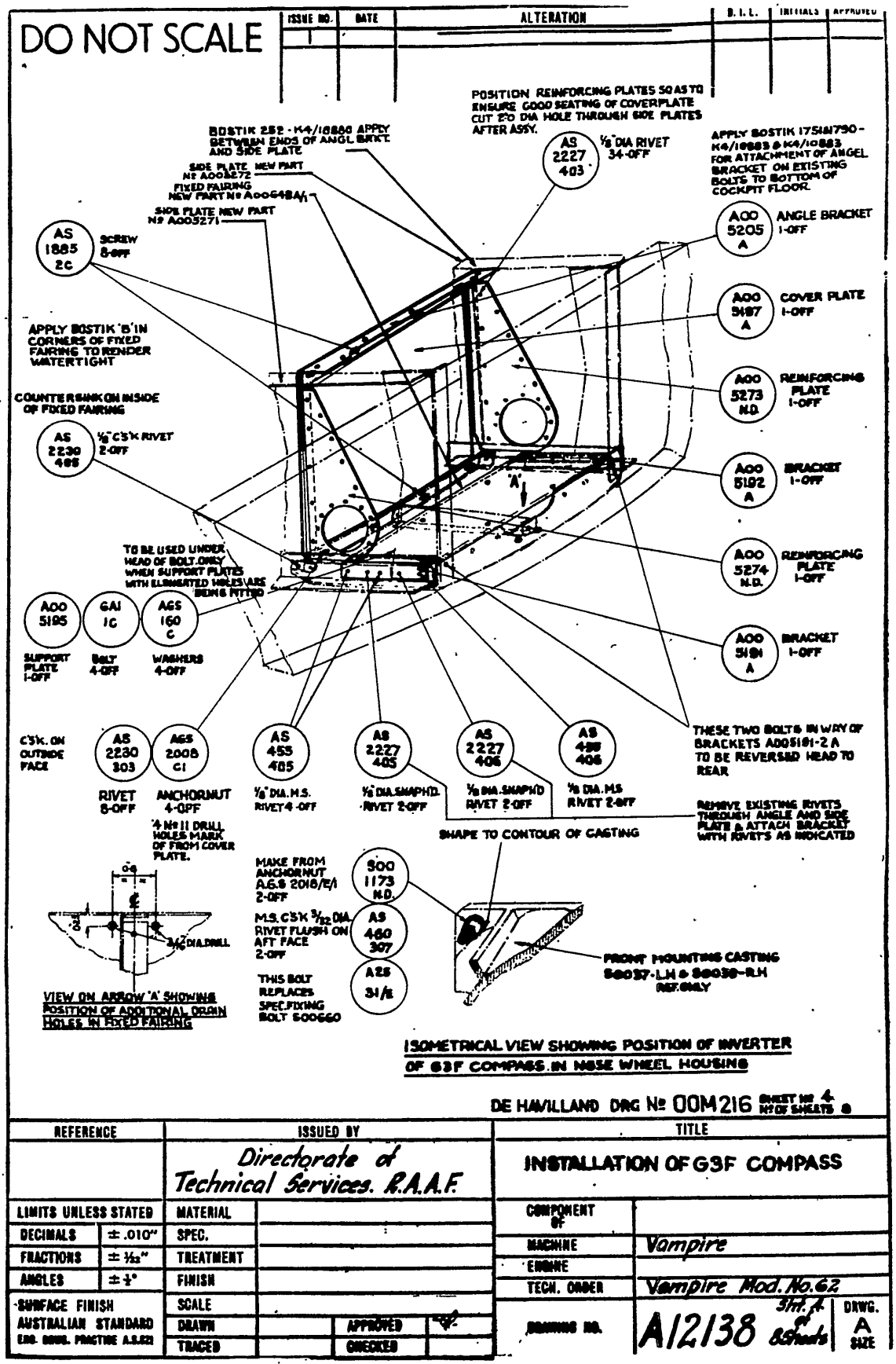
DO NOT SCALE
ISSUE NO.
DATE
ALTERATION
B. I. L.
INITIALS
APPROVED
POSITION REINFORCING PLATES SO AS TO ENSURE GOOD SEATING OF COVERPLATE CUT 2·0 DIA HOLE THROUGH SIDE PLATES AFTER ASSY.
BOSTIK 252 - K4/10880 APPLY BETWEEN ENDS OF ANGL BRKT AND SIDE PLATE
SIDE PLATE NEW PART Nº A005272
FIXED FAIRING NEW PART Nº A005648A/1
SIDE PLATE NEW PART Nº A005271
AS 2227 403 1/8" DIA RIVET 34-OFF
APPLY BOSTIK 1751M750 - K4/10883 & K4/10883 FOR ATTACHMENT OF ANGEL BRACKET ON EXISTING BOLTS TO BOTTOM OF COCKPIT FLOOR.
AS 1885 2C SCREW 8-OFF
A00 5205 A ANGLE BRACKET 1-OFF
APPLY BOSTIK 'B' IN CORNERS OF FIXED FAIRING TO RENDER WATERTIGHT
A00 5187 A COVER PLATE 1-OFF
COUNTERSINK ON INSIDE OF FIXED FAIRING
AS 2230 406 1/8" C'SK RIVET 2-OFF
A00 5273 N.D. REINFORCING PLATE 1-OFF
A00 5192 A BRACKET 1-OFF
TO BE USED UNDER HEAD OF BOLT ONLY WHEN SUPPORT PLATES WITH ELIMINATED HOLES ARE BEING FITTED
A00 5274 N.D. REINFORCING PLATE 1-OFF
A00 5195 SUPPORT PLATE 1-OFF
GAI 1C BOLT 4-OFF
AGS 160 C WASHERS 4-OFF
A00 5191 A BRACKET 1-OFF
C'SK. ON OUTSIDE FACE
AS 2230 303 RIVET 8-OFF
AGS 2008 C1 ANCHORNUT 4-OFF
AS 455 405 1/8" DIA. M.S. RIVET 4-OFF
AS 2227 405 1/8" DIA. SNAP HD. RIVET 2-OFF
AS 2227 406 1/8 DIA. SNAP HD RIVET 2-OFF
AS 455 406 1/8 DIA. M.S RIVET 2-OFF
THESE TWO BOLTS IN WAY OF BRACKETS A005181-2 A TO BE REVERSED HEAD TO REAR
REMOVE EXISTING RIVETS THROUGH ANGLE AND SIDE PLATE & ATTACH BRACKET WITH RIVETS AS INDICATED
4 Nº 11 DRILL HOLES MARK OF FROM COVER PLATE.
SHAPE TO CONTOUR OF CASTING
MAKE FROM ANCHORNUT A.G.S 2018/E/1 2-OFF
S00 1173 N.D.
M.S. C'SK 3/32 DIA RIVET FLUSH ON AFT FACE 2-OFF
AS 460 307
THIS BOLT REPLACES SPEC. FIXING BOLT S00660
A2S 31/E
FRONT MOUNTING CASTING S80037-L.H & S80038-R.H REF. ONLY
3/4" DIA DRILL
VIEW ON ARROW 'A' SHOWING POSITION OF ADDITIONAL DRAIN HOLES IN FIXED FAIRING
ISOMETRICAL VIEW SHOWING POSITION OF INVERTER OF G3F COMPASS IN NOSE WHEEL HOUSING
DE HAVILLAND DRG Nº 00M216 SHEET Nº 4 Nº OF SHEETS 6
REFERENCE
ISSUED BY
Directorate of Technical Services. R.A.A.F.
TITLE
INSTALLATION OF G3F COMPASS
LIMITS UNLESS STATED
DECIMALS ± .010"
FRACTIONS ± 1/32"
ANGLES ± 1°
SURFACE FINISH AUSTRALIAN STANDARD
MATERIAL
SPEC.
TREATMENT
FINISH
SCALE
DRAWN
TRACED
APPROVED
CHECKED
COMPONENT OF
MACHINE Vampire
ENGINE
TECH. ORDER Vampire Mod. No. 62
DRAWING NO. A12138 3rd A. 8 sheets
DRWG. A SIZE

DO NOT SCALE

ISSUE NO.	DATE	ALTERATION	B.I.L.	INITIALS	APPROVED

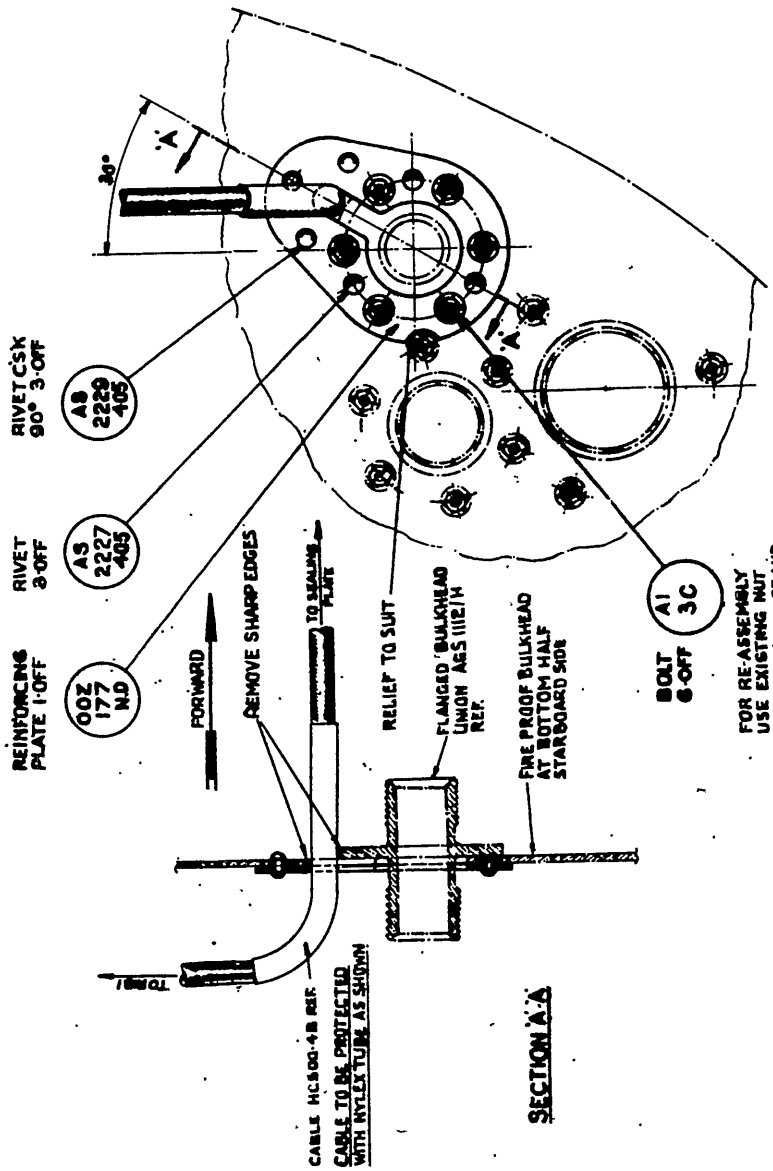

DE HAVILLAND DRG No 00M216 SHEET No 5 No OF SHEETS 8

REFERENCE	ISSUED BY	TITLE
	Directorate of Technical Services. R.A.A.F.	INSTALLATION OF 63F COMPASS

LIMITS UNLESS STATED		MATERIAL		COMPONENT OF	
DECIMALS	± .010"	SPEC.		MACHINE	Vampire
FRACTIONS	± 1/32"	TREATMENT		ENGINE	
ANGLES	± ½°	FINISH		TECH. ORDER	Vampire Mod. No. 62
SURFACE FINISH AUSTRALIAN STANDARD ENG. DRWG. PRACTICE A.S.E.S.		SCALE		DRAWING NO.	A12138 Sht 5 of 8 Sheets
		DRAWN	APPROVED		DRWG. SIZE A
		TRACED	CHECKED		

DO NOT SCALE

ISSUE NO.	DATE	ALTERATION	B. I. L.	INITIALS	APPROVED

PLAN VIEW OF COCKPIT FLOOR SHOWING POSITION AND REWORK FOR G3F COMPASS CONTROL PANEL AND PRESSURE SEAL FOR INVERTER CABLE

NOTE: APPLY BOSTIK 1751 AND 1780 FOR ASSEMBLY

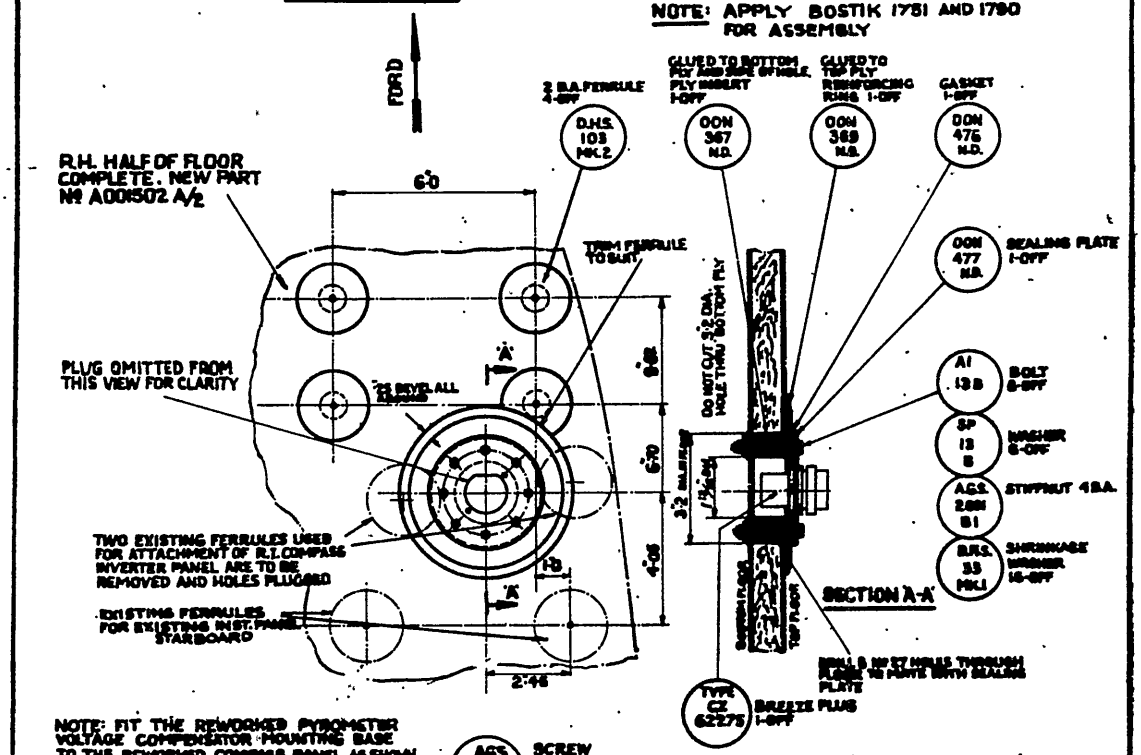

NOTE: FIT THE REWORKED PYROMETER VOLTAGE COMPENSATOR MOUNTING BASE TO THE REWORKED COMPASS PANEL AS SHOWN AND THEN RE-ASSEMBLE THE VOLTAGE COMPENSATOR AND SHOCK MOUNTS TO THE MOUNTING BASE

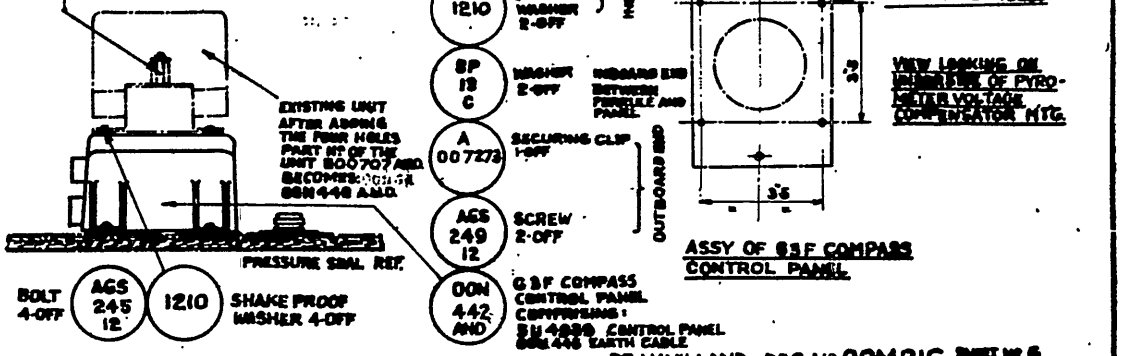

DE HAVILLAND DRG Nº OOM216 SHEET Nº 6

REFERENCE	ISSUED BY	TITLE
	Directorate of Technical Services. R.A.A.F.	INSTALLATION OF G3F COMPASS

LIMITS UNLESS STATED		MATERIAL		COMPONENT OF	
DECIMALS	± .010"	SPEC.		MACHINE	Vampire
FRACTIONS	± 1/32"	TREATMENT		ENGINE	
ANGLES	± ½°	FINISH		TECH. ORDER	Vampire Mod. No. 62
SURFACE FINISH AUSTRALIAN STANDARD		SCALE		DRAWING NO.	A12138 Sht. 6 of 8 Sheets DRWG. A
		DRAWN	APPROVED		
		TRACED	CHECKED		

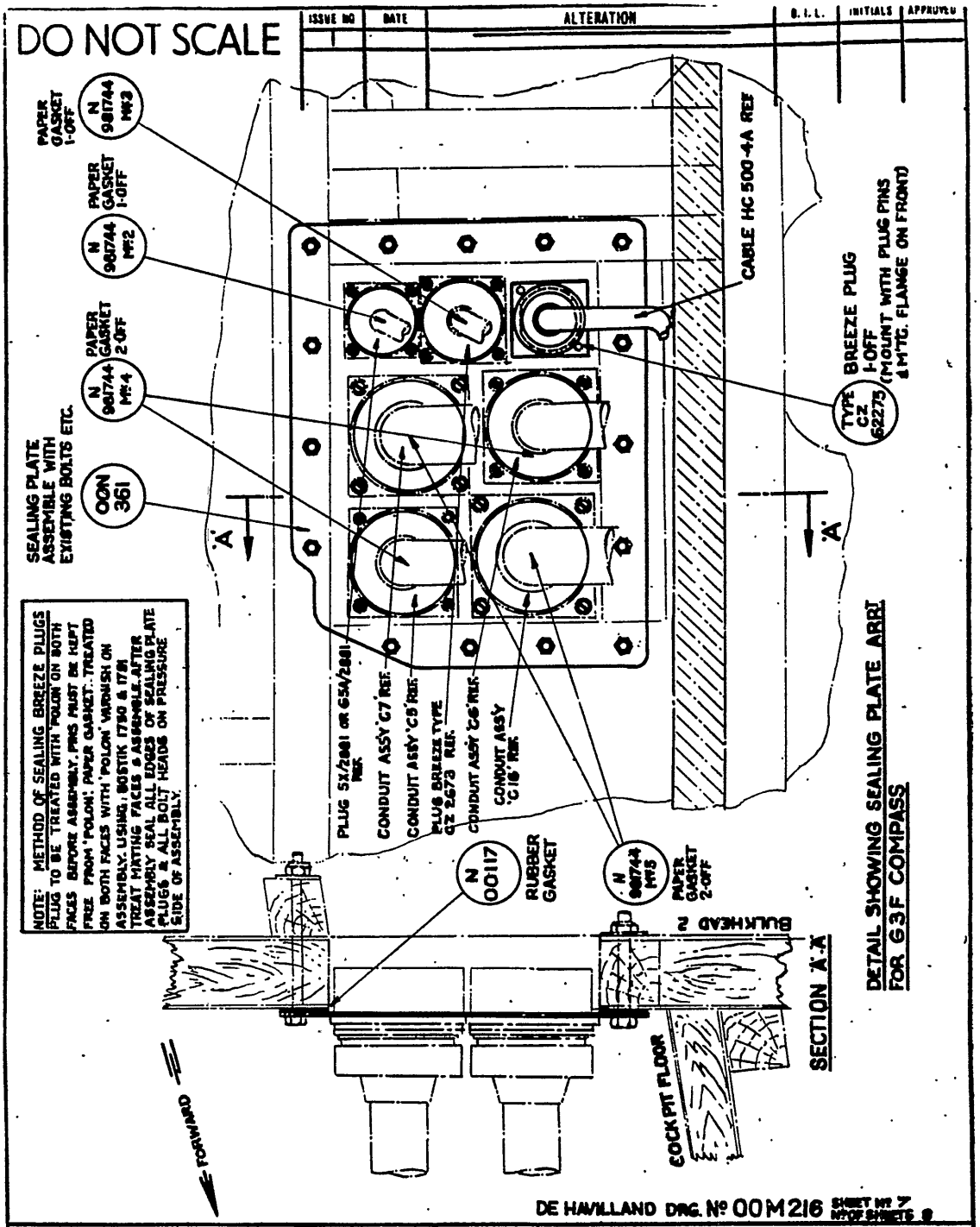
DO NOT SCALE
ISSUE NO
DATE
ALTERATION
B. I. L.
INITIALS
APPROVED
PAPER GASKET 1-OFF
N 981744 MK3
PAPER GASKET 1-OFF
N 981744 MK2
PAPER GASKET 2-OFF
N 981744 MK4
OON 361
SEALING PLATE ASSEMBLE WITH EXISTING BOLTS ETC.
CABLE HC 500-4A REF
BREEZE PLUG 1-OFF (MOUNT WITH PLUG PINS & MTG. FLANGE ON FRONT)
TYPE CZ 62273
A
A
NOTE: METHOD OF SEALING BREEZE PLUGS
PLUG TO BE TREATED WITH 'POLON' ON BOTH FACES BEFORE ASSEMBLY. PINS MUST BE KEPT FREE FROM 'POLON'. PAPER GASKET: TREATED ON BOTH FACES WITH 'POLON' VARNISH ON ASSEMBLY. USING, BOSTIK 1780 & 1781 TREAT MATING FACES & ASSEMBLE AFTER ASSEMBLY SEAL ALL EDGES OF SEALING PLATE PLUGS & ALL BOLT HEADS ON PRESSURE SIDE OF ASSEMBLY.
PLUG 5X/2881 OR 65A/2881 REF.
CONDUIT ASSY 'C7' REF.
CONDUIT ASSY 'C5' REF.
PLUG BREEZE TYPE CZ 2673 REF.
CONDUIT ASSY 'C6' REF.
CONDUIT ASSY 'C16' REF.
N 00117
RUBBER GASKET
N 981744 MK5
PAPER GASKET 2-OFF
BULKHEAD 2
SECTION 'A-A'
DETAIL SHOWING SEALING PLATE ARR'T FOR G3F COMPASS
FORWARD
COCKPIT FLOOR
DE HAVILLAND DRG. Nº 00M216 SHEET Nº 7 Nº OF SHEETS 8
REFERENCE
ISSUED BY
Directorate of Technical Services. R.A.A.F.
TITLE
INSTALLATION OF G3F COMPASS
LIMITS UNLESS STATED
DECIMALS ± .010"
FRACTIONS ± 1/32"
ANGLES ± 1/2°
SURFACE FINISH AUSTRALIAN STANDARD ENG. DRWG. PRACTICE A.S.B.123
MATERIAL
SPEC.
TREATMENT
FINISH
SCALE
DRAWN
TRACED
APPROVED
CHECKED
COMPONENT OF
MACHINE Vampire
ENGINE.
TECH. ORDER Vampire Mod. No. 62
DRAWING NO. A12138 Sht 7 of 8 sheets
DRWG. A SIZE

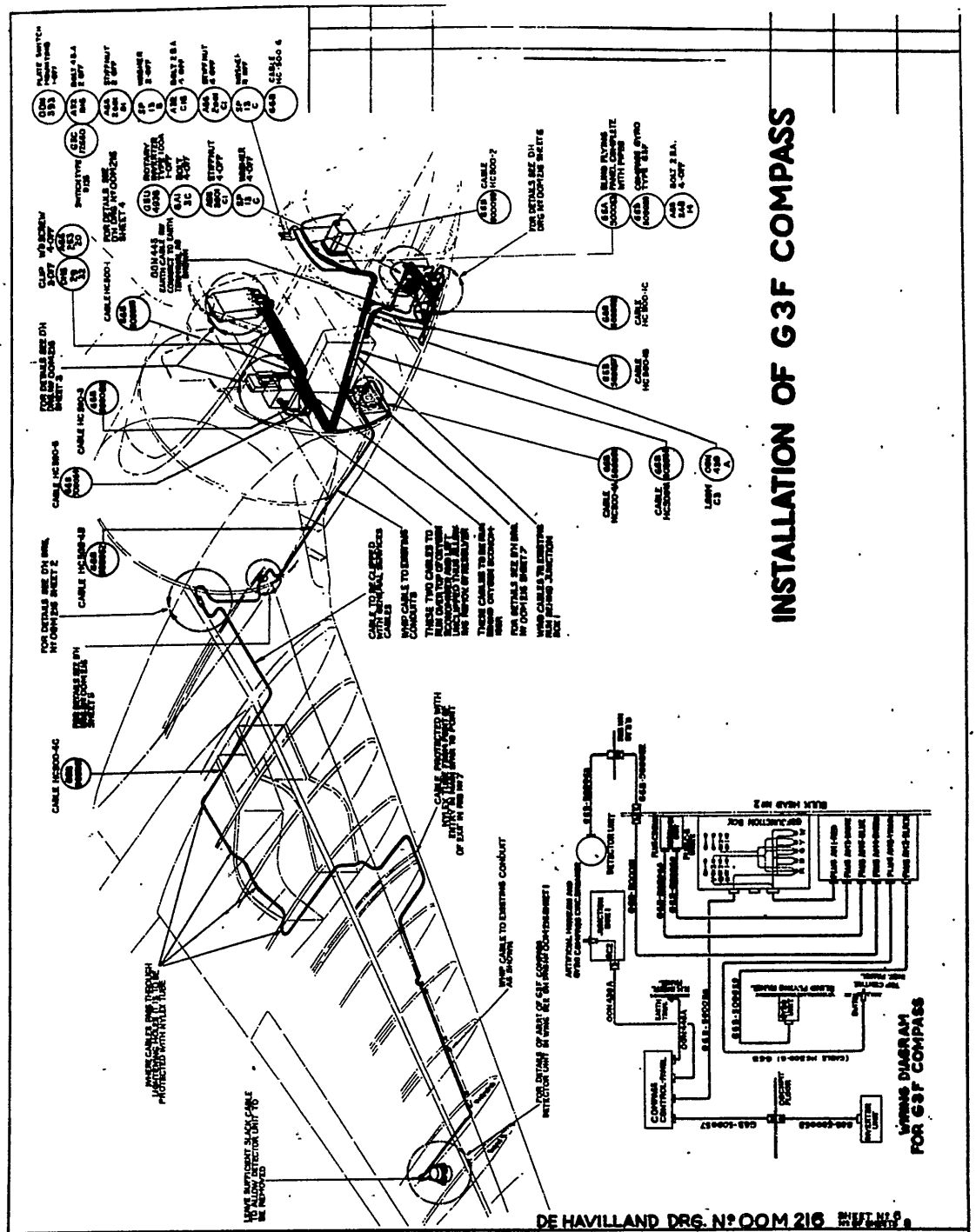

Reference	Issued by	Title
		Installation of G3F Compass.

Limits unless stated		Material		Component of	
Decimals	± .010	Spec.		Machine	Vampire
Fractions	± 1/32"	Treatment		Engine	
Angles	± ½°	Finish		Tech. Order	Vampire Mod. No. 62
Surface Finish Australian Standard Eng. Drg. Practice A.S. CZ1.		Scale		Drawing No	A12138 Sht. 8 of 8 Sheets — Drg. size
		Drawn	Approved		
		Traced	Checked		

Restricted

Air Force Head-Quarters

Technical Order

VAMPIRE MODIFICATION NO. 63

Application: Mk.30, 31 & 33. (see Para. 2)

Classification: Class 2

TAB WASHER ON NOSEWHEEL JACK - INTRODUCTION

Introduction

1. This modification authorises the introduction of a tab washer on the nosewheel jack. This modification has been necessitated by service reports of the slackening back of the locknut on the adjustable end fitting, permitting the ram of the jack to turn and throw the retracting me/and add "of adjustment. This modification is to be A79-801 and A79-802.". on Vampire Mk.33 Aircraft ification No. 78.

General

2. This modification is applicable to Vampire Mk.30 and 31 aircraft and two (2) Vampire Mk.33 aircraft, A79-801 and A79-802, not incorporating the approved equivalent modification, De Havillands (Aust.) modification No.167.

3. This modification is to be incorporated as follows:-

(a) Aircraft in use : Not later than the next minor inspection after receipt of modification sets.

(b) Aircraft undergoing repair and inspection : During such repair or inspection.

(c) No special tools will be required.

(d) Man-hours : Approximately six man-hours per aircraft.

(e) The trade mustering responsibility for the incorporation of this modification airframe is fitter.

Supply

4. The following parts will be required to complete one modification set:-

Item No.	Ident. No.	Part No.	Nomenclature	No. Off per A/c	Stores Class.
1	A79/502669	13.UN.171	Washer, tab	1	C
2	H28B/5032	AGS.784/3	Pin, split, 1/16" dia. x 1" long	1	C

NOTE: Items 1 and 2 will be delivered from De Havilland Aircraft Pty. Ltd. to Sub-Modification Section, No.2 Aircraft Depot, which will issue these items on demand.

Salvage

5. The following part will be rendered redundant by the incorporation of this modification:-

Item No.	Ident. No.	Part No.	Nomenclature	No. Off Per A/c.	Stores Class.
3	H28B/5032	AGS.784/3	Pin, split, 1/16" dia. x 1" long	1	C

NOTE: Item 3 is to be disposed of in accordance with current authorised procedure.

Method of Incorporation

6. This modification is incorporated in the following sequence of operations:-

(a) Trestle the aircraft so that the nosewheel is free of the ground.

(b) Release the hydraulic accumulator pressure.

(c) Locate the special bolt, securing the forward end fitting of the nosewheel jack to the lever arm on the nosewheel unit. Refer to the Vampire Trainer Maintenance and Repair Manual, Section 3, Chapter 5, Figure 9 or Australian Air Publication 828 Figure 54.

(d) (i) On Vampire aircraft Mk.30 and 31, remove the detachable nose cap and bend back the nosewheel leg, until the special bolt (see paragraph 6 (c)) clears the nosewheel housing side beam. Support the nosewheel in the required position and gaining access through the nose compartment, remove the bolt and nut. Discard the split pin (item 3).

(ii) On aircraft D.H. Serial No.4081 and 4082 Mk.33, remove the portside detachable nose fairing and bend back the nosewheel slightly, until the special bolt lines up with the hole in the sidebeam - obtained during the incorporation of Modification V.628. Then remove the bolt and the nut. Discard the split pin (item 3).

(e) Loosen the locknut and remove the end fitting from the jack ram.

(f) Fit the new tab washer (item 1) under the locknut, replace the end fitting and re-assemble the end fitting to the lever arm, using the original bolt and nut and a new split pin (item 2).

(g) Remove the nosewheel support and inflate the hydraulic accumulator.

(h) Adjust the nosewheel retracting mechanism in accordance with current authorised procedure, and lock over the tab washer.

(i) Replace the detachable nose cap or the detachable nose fairing.

(j) Record the modification in the Airframe Log Book.

Drawings

7. No drawings will be required.

Effect on Weight and Balance

8. The effect of the incorporation of the modification on the weight and balance of the aircraft is negligible.

References : Files R.A.A.F. 9/84/91 and 150/4/8547
D.H.Aust. Mod. V.167
A.M. Mod. Vam.3149
L.M.C. Meeting No.36

Date of Issue : 9th October, 1953.

Restricted

Air Force Head-Quarters

Technical Order

VAMPIRE MODIFICATION NO. 64

Application: Mk.30, 31 & 33 see para. 2(a)

Classification: Class 2.

BONDING IN ELEVATOR RUDDER AND AILERON - INTRODUCTION

Introduction

1. This modification authorises the introduction of flexible bondings on the elevator, rudder and aileron to minimise the resistance between the control surfaces and the earth terminal.

General

2. (a) This modification is applicable to Vampire Mk.30, 31 and 33 aircraft not incorporating the approved equivalent modification De Havilland (Aust.) modification V.172.

(b) This modification is to be incorporated as follows:-

(i) Aircraft in use : Not later than the next minor inspection after receipt of modification sets.

(ii) Aircraft undergoing repair and inspection : During such repair or inspection.

(c) No special tools will be required.

(d) Man-hours : Approximately twelve (12) man-hours.

(e) The trade mustering responsibility is airframe fitter and electrical fitter (for testing).

Supply

3. The following parts will be required to complete one modification set:-

Item No.	Ident. No.	Part No.	Nomenclature	No. Off per A/c.	Stores Class.
1	G5A/26670	DHS.47/1	Bonding, flexible, 4 BA x 3" long	1	
2	G5A/26673	DHS.47/4	Bonding, flexible, 4 BA x 5" long	2	
3	G5A/26674	DHS/47/5	Bonding, flexible, 4 BA x 5.5" long	2	

Item No.	Ident. No.	Part No.	Nomenclature	No. off Per A/C	Stores Class.
4	H28/26129	DHS.31/41	Clip, pipe, brass 1.56" ID x 24 swg	3	
5		A32/B16	Screw, 4 BA x $\frac{1}{2}$" lg. rd.hd. M.S.	9	
		or			
	H28C/2863	AGS.~~249/5~~ 249/22	Screw, 4 BA x $\frac{1}{2}$" lg. rd.hd. ~~H.T.S.~~ M.S.		A/
5a		A33/B12	Screw, 4 BA x $\frac{3}{8}$" lg. c's'k, M.S.	1	
		or			
	H28C/2809	AGS.249/21	Screw, 4 BA x $\frac{3}{8}$" lg. C'sk ~~rd~~.hd. ~~H.T.S.~~ M.S.		A/
6	H28/5315	A16Y/BF	Nut, 4 BA M.S.	10	
7	H128F/31369	AGS.162 B	Washer, 4 BA	10	

NOTE: Items 1 to 7 inclusive will be delivered from De Havilland Aircraft Pty. Ltd. to Sub-modification Section 2 Aircraft Depot which will issue these items on demand.

Salvage

4. No parts will be rendered redundant by the incorporation of this modification.

Method of Incorporation

5. The following sequence of operations is the method for the incorporation of this modification:-

(a) Remove the rear fairing from both tailbooms, thus gaining access to the lower end of the rudder posts and to the outboard ends of the elevator post.

(b) Remove the cover plates from the inspection holes for the flying controls in the rear division of each tailboom.

Note: Throughout this modification, before attaching pipe clips or bonding flexibles, the protective treatment is to be removed locally to ensure good contact is made. After attachment, all such places are to be repainted with a matching colour.

(c) Refer drawing A11919. Attach a pipe clip (item 4) to each rudder post in the position shown, so that the clip faces towards the front of the aircraft and then secure the clip using attaching parts (items 5, 6 and 7). Assemble a flexible bonding (item 2) under the head of the bolt.

(d) Drill a 4 B.A. clear hole, as indicated on the drawing in each bottom plate, and attach the other ends of the two bonding flexibles using attaching parts (items 5, 6 and 7) through the newly drilled holes. Access to the forward face of the bottom plate is to be obtained through the inspection holes.

(e) Similarly, attach a pipeclip and a flexible bonding to the L.H. side of the elevator post, as shown on the drawing using new parts (items 1, 4, 5, 5a, 6 and 7).

(f) Drill a 4 B.A. hole in the rear fairing attachment plate on the same centreline as the anchor nuts, countersunk to suit screw head, and attach the other end of the bonding flexible to the attachment plate using a screw (item 5), nut (item 6) and washer (item 7).

(g) Locate and temporarily remove the rectangular cover plate in the lower aileron shroud just outboard of the aileron control pulley from each wing.

(h) Refer the drawing and locate the position of the bonding flexible as shown thereon. Interconnect the aileron and aileron shroud using a bonding flexible (item 3) and attaching parts (items 5, 6 and 7) which pick up in the existing tooling holes.

(i) Check the reduced resistances in accordance with electrical order No.3.

(j) Replace the cover plates for the inspection holes, the rear fairing and the access panels in the wing.

(k) Record the modification in the Airframe Log Book and on the wing modification plate.

Drawings

6. Drawing A-11919 is attached.

Effect on Weight and Balance

7. The effect of the incorporation of this modification on the weight and balance of the aircraft is negligible.

References	:	Files R.A.A.F. 9/84/472, 150/4/8549 D.H. Aust. Mod. V.172 Electrical Order No.3 L.M.C. Meeting No.37
Attachment	:	Drawing A.11919
Date of Issue	:	6th November, 1953.

DO NOT SCALE

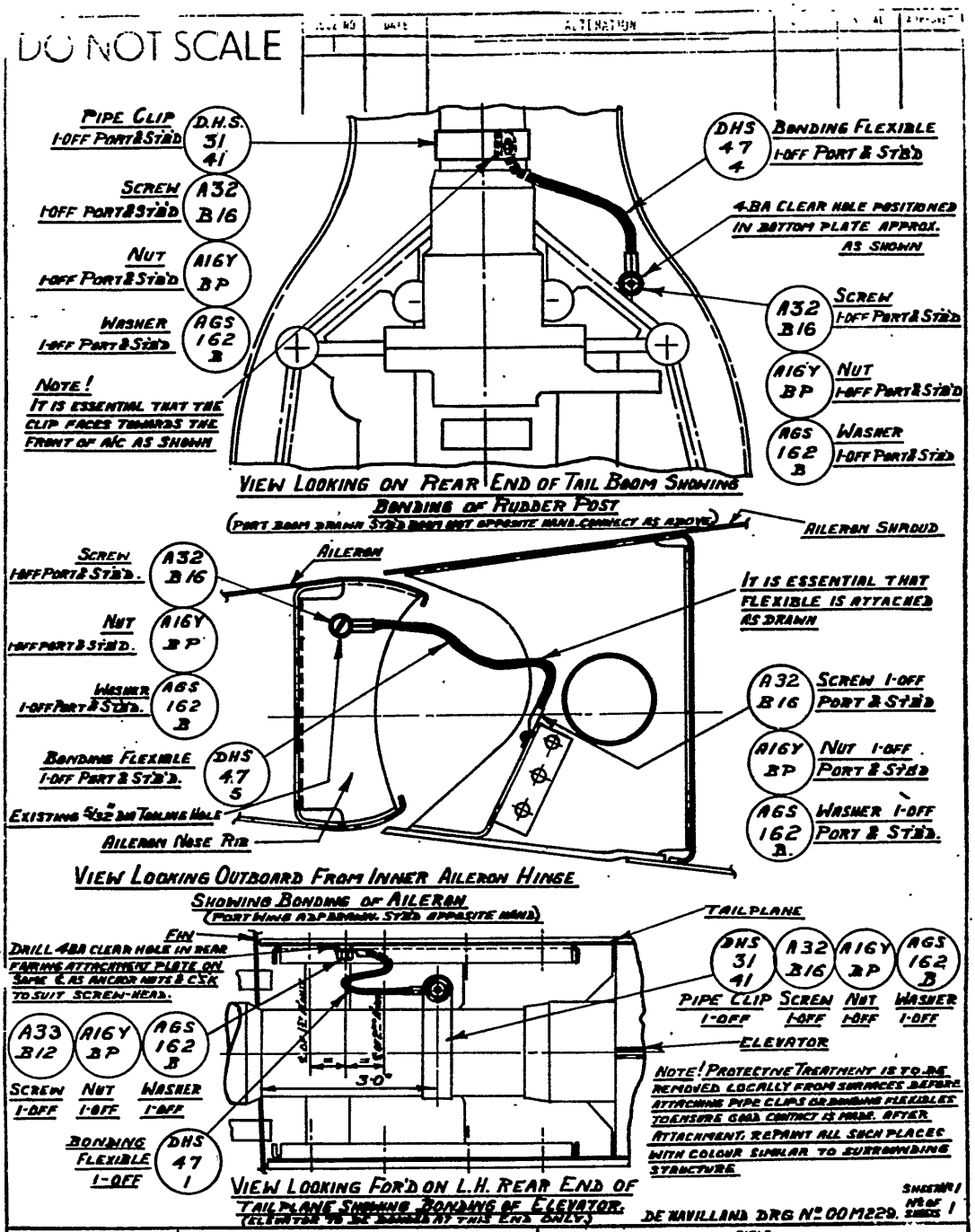

REFERENCE	ISSUED BY	TITLE
		BONDING IN ELEVATOR, RUDDER AND AILERON — INTRODUCTION.

LIMITS UNLESS STATED		MATERIAL		COMPONENT OF	TAILPLANE
DECIMALS	± .010"	SPEC.		MACHINE	VAMPIRE MK. 30, 31 & 33.
FRACTIONS	± 1/32"	TREATMENT		ENGINE	NENE 2VH
ANGLES	± ½°	FINISH		TECH. ORDER	VAMPIRE MOD. No 64.
SURFACE FINISH AUSTRALIAN STANDARD ENG DWG. PRACTICE A.S.C.71		SCALE		DRAWING NO.	A-1/9/9 DRWG. A SIZE
		DRAWN	APPROVED		
		TRACED	CHECKED		

Restricted

Air Force Head-Quarters — VAMPIRE MODIFICATION NO. 65

Technical Order — Classification: Class 2

R.P. CABLES AT SAFETY BREAK - CLIPPING

Reason for and Description of Modification

1. This modification calls for the introduction of a new clipping device for the R.P. cables at the safety break.

2. On some aircraft these cables have been badly chafed by the main wheels during retraction of the undercarriage.

Application

3. This work is to be carried out on those Mk.30, Mk.31 and Mk.33 Vampire aircraft which have not had manufacturer's modification V176 incorporated.

Responsibility for Incorporation

4. The modification is to be incorporated at unit level by electrical fitters.

Action in Respect of Spares

5. Not applicable.

Orders superseded or Cancelled

6. No orders are superseded or cancelled by this modification.

Equivalent Modification

7. De Havilland (Aust.) Mod. V.176 is the manufacturer's equivalent modification.

Supply

8. The following parts are required to complete one modification set:-

Item No.	Ident. No.	Part No.	Nomenclature	No. off per set	Stores Class
1		OON551A	Clip Assembly	2	C
2		AGS2048/ 423/BH	Rivet $\frac{1}{8}$" D. x .23" long, Tucker Pop. domed head, Al.Alloy	4	C

Note: Items 1 and 2 will be delivered from De Havilland Aircraft Pty. Ltd. to sub-modification section 2 Aircraft Depot. Sub-Modification section will issue these items on demand.

Disposal of Parts Removed

9. No parts will be rendered redundant by the incorporation of this modification.

Disposal of Parts in Stock

10. Not applicable.

When Modification is to be Incorporated

11. This modification is to be incorporated at or before the first minor servicing after receipt of parts.

Method of Incorporation

12. (a) Man-hours involved

Approximately four man-hours will be required to incorporate this modification.

(b) Special tools, jigs &c.

No special tools are required.

(c) Sequence of Operations

(i) Locate the R.P. cable at the safety break in the port side wheel well. Refer drawing A11924 and drill two holes as indicated using a No.30 size drill.

(ii) Assemble the new clip (item No.1) to the stiffener channel as shown using the two rivets (item No.2).

(iii) Attach the slack cables to the clips in accordance with the drawings and take special care that no parts of the cable are hanging down.

(iv) Modify the starboard side in a similar manner.

(d) Tests

Functionally test the circuits involved for serviceability.

(e) Recording

Record the modification in the airframe log book and also on the wing modification plate and the form E.E./77.

Drawings

14. Drawing No.A11924 is attached.

Effect on Weight and Balance

15. The effect of this modification on the weight and balance of the aircraft is negligible.

References : Files R.A.A.F. 9/84/36 and 150/4/8550
D.H.(Aust.) Mod.V176
L.M.C. Meeting 38
D.H.(Aust.) Mcd. I.L.227

Attachment : Drawing A11924.

Date of Issue : 26th October, 1953.

DO NOT SCALE

ISSUE NO	DATE	ALTERATION	D. I. L.	INITIALS	APPROVED

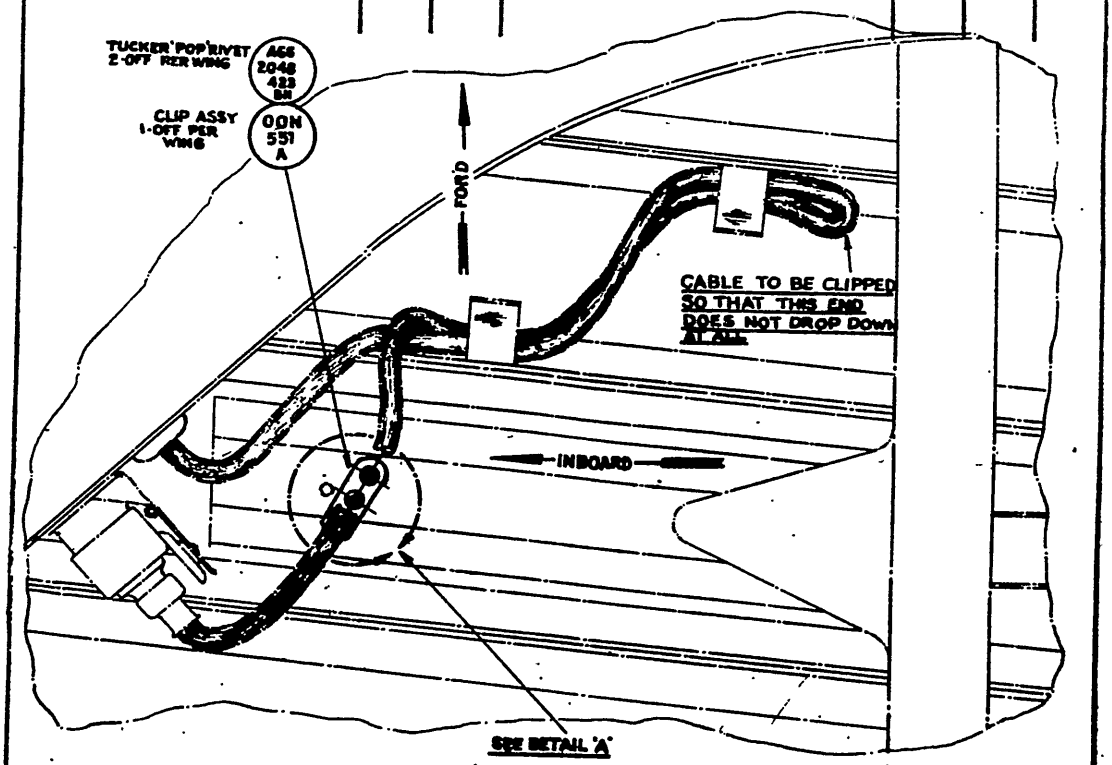

INVERTED PLAN VIEW OF PORT WHEEL WELL
STARBOARD WING OPPOSITE

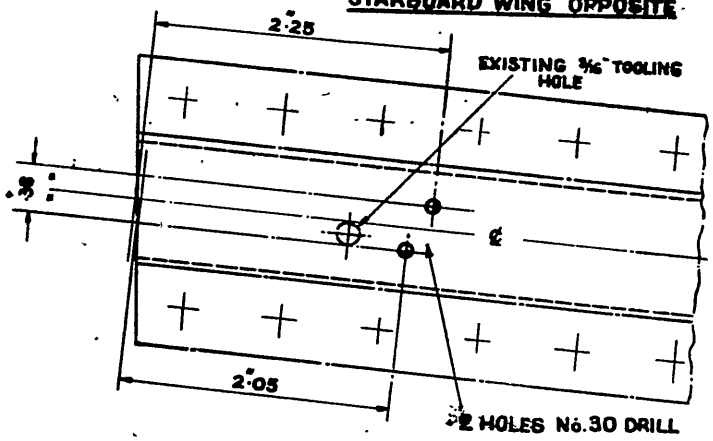

IMPORTANT: NO NYLEX TO BE FITTED TO THIS CABLE IN THE WHEEL WELL

DETAIL 'A' SHOWING LOCATION OF HOLES IN STIFFENER

DE HAVILLAND DRG No. OOM 227 SHT 1 No. OF SHTS 1

REFERENCE	ISSUED BY	TITLE
	DIRECTORATE OF TECHNICAL SERVICES R.A.A.F.	R.P. CABLES AT SAFETY BREAK-CLIPPING

LIMITS UNLESS STATED		MATERIAL		COMPONENT OF	WHEEL WELL
DECIMALS	± .010"	SPEC.		MACHINE	VAMPIRE
FRACTIONS	± 1/32"	TREATMENT		ENGINE	
ANGLES	± ½°	FINISH		TECH. ORDER	VAMPIRE MOD. Nº 65
SURFACE FINISH AUSTRALIAN STANDARD ENG. DRWG. PRACTICE A.S.E.21		SCALE		DRAWING NO.	A 11924
		DRAWN	APPROVED		DRWG. A SIZE
		TRACED	CHECKED		

Restricted

Air Force Head-Quarters

Technical Order

VAMPIRE MODIFICATION NO. 66

Application: Mk.30 & 31 (see para.2)

Classification: Class 2

IMPROVED SPRING FOR AMMUNITION DOOR LOCK - INTRODUCTION

Introduction

1. This modification authorises the introduction of an improved type of spring for the ammunition door locks. This modification is necessitated by reports of broken springs with the consequent danger of the doors opening in flight.

Note: This modification only applies to door locks introduced by De Havillands (Aust.) Modification V36 (issue 2) (12F183A), see paragraph 2.

General

2. This modification is applicable to Vampire Aircraft Mk.30 and 31 not incorporating the approved equivalent De Havilland (Aust.) modification V.146. This modification is to be incorporated on the starboard side only of aircraft A79-862, A79-76 and A79-202.

3. This modification is to be incorporated as follows:-

(a) Aircraft in use : Not later than next minor inspection after receipt of modification sets.

(b) Aircraft undergoing repair and inspection : During such repair or inspection

(c) Spares : Modification of spares to be carried out at direction of Maintenance Group Headquarters.

Spares are:-
A79.501724 - 12.F.183A - Lock Assy.
to be reworked to:
A79/501943 - 12.F.897A - Lock Assy.

(d) No special tools will be required.

(e) Man-hours : Approximately 8 man-hours per aircraft.

(f) The trade mustering responsibility for the incorporation of this modification is airframe fitter.

Supply

4. The following parts will be required to complete one modification set:-

Item No.	Ident. No.	Part No.	Nomenclature	No. off per a/c.	Stores Class.
1	H28/8464 or H29/8314	AS1882/10C AS1242/10C	Bolt, 2 BA x 1.4" long, Csk. M/S Bolt, HTS 2 BA x 1.4" long, Csk. 90°	8	
2	H28/8462 or H28/8312	AS1882/8C AS1242/8C	Bolt, 2 BA x 1.2" long Csk. Bolt, HTS 2 BA x 1.2" long, Csk. 90°	4	
3	H28/5316	A16Y/CP	Nut, 2 BA M/S.	12	
4		AS460/610	Rivet, 3/16" x $\frac{5}{8}$" long Csk. 90° mild steel.	4	
5	A79/501944	12.F.899A	Spring, latch.	4	

Note:- Items 1 to 5 inclusive will be delivered from De Havilland Aircraft Pty. Ltd. to Sub-Modification Section, 2 Aircraft Depot, which will issue these items on demand.

Salvage

5. The following parts will be rendered redundant by the incorporation of this modification:-

Item No.	Ident. No.	Part No.	Nomenclature	No. off per a/c.	Stores Class.
6		4/0095/10	Spring latch.	4	
7	H28/8464	AS1882/10C	Bolt, 2 BA x 1.4" long Csk.	8	
8	H28/8462	AS1882/8C	Bolt, 2 BA x 1.2" long, Csk.	4	
9	H28/5316	A16Y/CP	Nut, 2 BA M/S	12	
10		AS460/610	Rivet, Csk. 90° mild steel 3/16" x $\frac{5}{8}$" long	4	

Note:- Items 6 to 10 are to be disposed of in accordance with current authorised procedure.

Method of Incorporation

6. Open the ammunition door at the port side and prop it in the open position.

7. Undo the three 2 B.A. nuts on each door lock and withdraw the bolts from the outer face of the ammunition door. Remove both door locks. Discard the bolts and nuts (items 7 to 9).

8. Modify the door locks in accordance with one of the following two schemes. It should be noted that scheme 2 is only to be used if difficulty is encountered with scheme 1.

It is not anticipated that any difficulty will arise as scheme 1 has been already carried out.

Scheme 1

9. Drill out the rivet securing the spring in position (item 10) and remove the existing spring (item 6).

10. Refer drawing A11929, and with the latch in the "down" position, fit the new spring as indicated (item 5).

11. Secure the spring using the rivet (item 4).

Scheme 2

12. Drill out the rivet (item 10) securing the spring in position and remove the existing spring (item 6).

13. Refer drawing A11929, and file away the portions shown hatched. Clean and remove all traces of fillings.

14. Fit the spring (item 5) in the way indicated on the drawing and secure with rivet (item 4).

Operations applicable to scheme 1 and scheme 2

15. Alter the Part No. of the door lock 12.F.183A to read 12.F.897A.

16. Reassemble the two door locks to the door with two new bolts (item 2) at the top, four new bolts (item 1) at the bottom and six new nuts (item 3). Peen the bolts over to lock.

17. Repeat the operations for the starboard ammunition door. Alter the part number of the door A002573-4A/3 to A002573-4A/4.

18. Check for correct functioning and lock the doors.

19. Record the modification in the Airframe Log Book.

Drawing

20. Drawing A11929 is attached.

Effect on Weight and Balance

21. The effect of the incorporation of this modification on the weight and balance of the aircraft is negligible.

References	:	Files R.A.A.F. 9/84/16 - 150/4/8551 D.H. Aust. Mod. V.146 A.M. Mod. VAM.3085 L.M.C. Meeting No.28
Attachment	:	Drawing A11929
Date of Issue	:	27th August, 1953.

DO NOT SCALE

ISSUE NO	DATE	ALTERATION	D. I. L.	INITIALS	APPROVED
1					

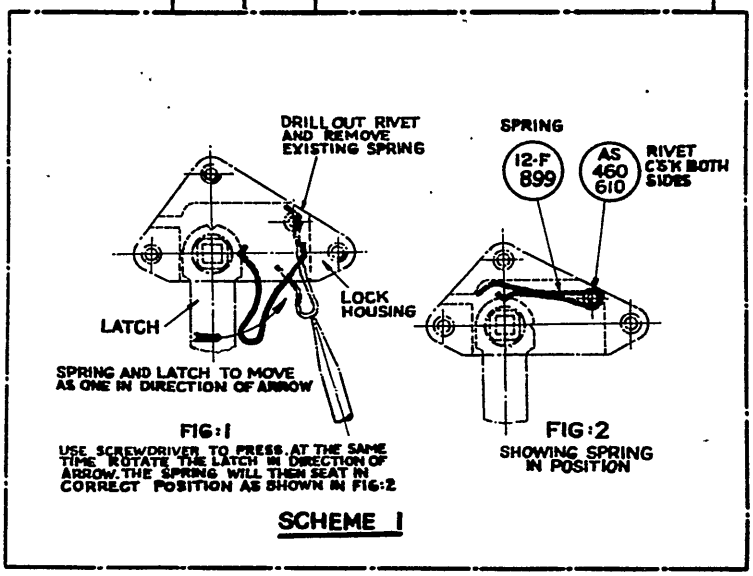

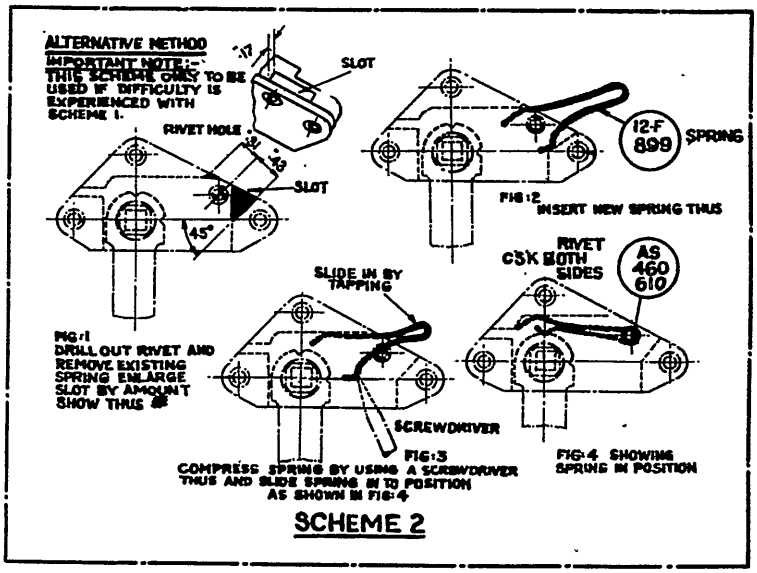

DE HAVILLAND DRG Nº 00M226 SHT 1 Nº OF SHTS 1

REFERENCE	ISSUED BY			TITLE		
	DIRECTORATE OF TECHNICAL SERVICES R.A.A.F.			IMPROVED SPRING FOR AMMUNITION DOOR LOCK -INTRODUCTION-		
LIMITS UNLESS STATED	MATERIAL			COMPONENT OF	FUSELAGE	
DECIMALS ±.010"	SPEC.			MACHINE	VAMPIRE MK. 30	
FRACTIONS ± 1/32"	TREATMENT			ENGINE	NENE 2VH	
ANGLES ± ½°	FINISH			TECH. ORDER	VAMPIRE MOD. Nº 66	
SURFACE FINISH AUSTRALIAN STANDARD ENG. DRWG. PRACTICE A.S.E.21	SCALE			DRAWING NO.	A11929	DRWG. A SIZE
	DRAWN		APPROVED			
	TRACED		CHECKED			

9/42

Restricted

Air Force Head-Quarters

Technical Order

VAMPIRE MODIFICATION NO. 67

Application: See Para. 2.

Classification: Class 2.

MASTER R.P. AND BOMB SWITCH - REPOSITIONING

Introduction

This modification calls for the repositioning of the master R.P. and bomb switch, so that this switch will be more accessible to the pilot.

General

2. The change of switch position is to be carried out in those Mark 31 Vampire aircraft which have not had incorporated the equivalent makers modification De Havilland (Aust.) modification V.149.

3. This work will be carried out by electrical personnel. No special tools will be required, and the time taken will be approximately 40 man-hours per aircraft.

Supply

4. The following items will be required to complete one modification set:-

Item	Ident. No.	Part No.	Nomenclature	No. per A/c.	Store Class
1		00N515	Plate Blanking	1	C
2		A32/A10	Bolt 6BA	4	C
3	H28/27078	DHS.103/2	Ferrule 2BA	2	C
4	H28/26251	DHS.98	Ferrule Woodscrew	4	C
5	H28/26101	DHS.30/4	Clip Cable	1	C
6		N00503A/1	Cable	1	C
7		00N511A	Bracket Master Switch	1	C
8	H28/6998	6A1/1C	Bolt 2BA	2	C
9	H128F/ 59794	1210	Washer - Shake proof	2	C
10	H28C/2649	AGS/253/20	Woodscrew	1	C
11	H28/26105	DHS.30/8	Clip Cable	1	C
12	H28/26106	DHS.30/9	Clip Cable	2	C
13	G5F/20163		Tubing Nylex 25 MM.	$2\frac{5}{8}$"	C
14	G5F/20059		Tubing Nylex 6 MM.	2' 0"	C
15	G5F/20063		Tubing Nylex 10 MM.	10' 0"	C
16	G5E/30155		Cable AN18, one core	50' 0"	C

Item	Ident. No.	Part No.	Nomenclature	No. per A/c.	Store Class
17	G5E/30155		Cable AN18, one core	10' 0"	C
18	G5E/30161		Cable, AN16, one core	20' 0"	C
19	G5E/30161		Cable, AN16, one core	5' 0"	C
20	H28/26138	DHS/117 Mk.10	Ferrule, inner	1	C
21	H28/26144	DHS.118 Mk.10	Ferrule, outer	1	C

5. Items 1 to 21 will be delivered from De Havillands Aircraft Pty. Ltd. to Sub-Modification Section 2AD. Sub-Modification Section will issue these items on demand.

Salvage

6. The following parts will be rendered redundant by the incorporation of this modification and these items are to be disposed of in accordance with current authorised procedure:-

Item	Ident.	Part No.	Nomenclature	No. per A/c	Stores Class
22	H28/10286	AGS.2001/A1	Nut 6 BA	4	C
23	H28/26251	DHS.98	Ferrule Wood Screw	2	C
24	H28/26100	DHS.30/3	Clip Cable	2	C
25		N00503A	Cable, Supply	1	C
26	H28/26101	DHS.30/4	Clip, Cable	2	C
27	H28/26137	DHS.117 Mk.8	Ferrule, inner	1	C
28	H28/26143	DHS.118 Mk.8	Ferrule, outer	1	C

Method of Incorporation

7. Remove the pilot's seat in accordance with current authorised procedure.

8. Remove the front and rear cover plates from the R.P. and bomb master switch box, which is mounted on the cockpit floor on the starboard side, just forward of the pilot's seat.

9. Disconnect all cables attached to the R.P. and bomb master switch, and then remove the switch from the junction box. Discard four of the nuts (item 22) but retain all other parts.

10. Modify the internal wiring of the R.P. junction box as follows:-

Cable Code	Material		Leading From . . . . . .To
C G6	AN18	Original Cable Run	From Plug C8, pin C via switch No.3 to Relay No.3.
		New Cable Run	From Plug C8, Pin C to Plug C17 Pin N, From Plug C17, Pin Q to relay No.3.
B 14	AN16	Original Cable Run	From terminal block No.2 to Switch No.4.
		New Cable Run	From terminal block No.2 to Plug C17 Pin X.
B 2	AN16	Original Cable Run	From plug C17, pin S to Switch No.4.
		New Cable Run	From plug C17, Pin S via terminal block No.1 to plug C17 Pin Z.
RP3	AN18	Original Cable Run	From Plug C17, Pin M, via Relay No.1 ~~via Switch No.4 to Switch 5~~
		New Cable run	From Plug C17, Pin M, via Relay No.1 to Plug C17, Pin P. From Plug C17 Pin P to Switch No.5.
CG8	AN18	Original Cable Run	From Relay No.4 to Switch No.3.
		New Cable Run	From Relay No.4 to Plug C17 Pin Y.

11. Replace the front and rear cover plates and fit a blanking plate (item 1) in the position formerly occupied by the master switch, using the four bolts (item 2) and the four nuts retained in paragraph 10. Alter the part number of the wired assembly of the junction box 00N301A to read 00N301A/1.

12. Locate the emergency switch in the cockpit on the port side, aft and above the engine control box and disconnect the electrical cable from the switch. Remove and retain the switch with its attaching parts.

13. Refer to drawing No. G11928, and remove and discard the two emergency switch woodscrew ferrules nearest to bulkhead No.2 (item 23), retain the cable clip attached to the lower ferrule.

14. Fit two new ferrules (item 3) in lieu, and assemble 4 ferrules (item 4) to the fuselage side forward of the engine control box, in accordance with the dimensions shown on the drawing.

15. Attach the emergency switch, retained from the previous operations (paragraph 13), to the four new ferrules using the original attaching parts.

16. Follow through the cable (refer drawing G11928), disconnected from the Emergency switch as in paragraph 13, which is part of the cockpit lighting cable assembly, and cut the 16 mm. 1/D black nylex tubing just forward of the U/V light cables as shown and pull through the two emergency switch leads. Bind the nylex tubing with waxed thread each side of the cut.

17. Cut back the emergency switch cable to obtain the required length, and slide the 1' 11¾" length of 6 mm. 1/D nylex tubing (item 14) over the two leads. Fit the original cable ends to the length. Alter the part number of the lighting cable 00N285A to read 00N285A/1.

18. Disconnect the cable clip (item 24) holding the U/V light cable to the fuselage side, and reconnect the cable, together with the emergency switch cable using a larger clip (item 5). Attach the reworked cable to the switch.

19. Remove conduit C17, running from the R.P. junction box to the sealing plate, from the aircraft.

20. Rework conduit C17 as follows:-

(a) cut the waxed thread around the nylex tubing at the junction box end of the cable;

A416 28 "(c) Remove from the conduit the two existing wires which connect the pin "F" at the R.P. junction box end and Pin "F" at the bulkhead end, and between pin "N" at the R.P. junction box end and pin "N" at the bulkhead end."

he socket
iscard the

mately 10"
item 15),
and mark and attach each core in the following manner;

(i) one AN18 core to be attached to pin F, code R.P.3;

(ii) one AN18 core to be attached to pin N, code CG3;

(iii) one AN18 core to be attached to pin P, code RF3;

(iv) one AN18 core to be attached to pin Q, code CG6;

(v) one AN18 core to be attached to pin Y, code CG8;

A416 28 (vi) one AN16 core to be attached to pin X, code B14;

(vii) one AN16 core to be attached to pin Z, code B2;

E (k) slide the new 23 mm. 1/D nylex tube, 2⅝" long (item 13) over the cable end and reassemble the socket, using two new ferrules (item 20 & 21);

F (l) alter the part number of concuit C17 from 00N291A to read 00N291A/1.

21. In the cockpit, locate the supply cable leading from the dimmer switches to junction box No.1 and remove and discard the cable together with the cable clips (item 26).

22. Connect the new master switch bracket (item 7) to the two new 2BA ferrules (refer paragraph 15) and to the upper existing woodscrew ferrule using two bolts (item 8), two washers (item 9) and woodscrew (item 10).

23. Assemble the R.P. and bomb master switch to the bracket using the original attaching parts.

24. Replace conduit C17 and fit a new supply cable (item No.6).

25. Whip the supply cable together with the new cable of conduit C17 along bulkhead No.2, and attach both the cables to the left hand cockpit side, as shown on the drawing No.G11928 SHEET 7 using new cable clips (item 11 & 12) and the cable clip retained in paragraph 14. AL 16

26. Connect the new cable to the master switch in accordance with the wiring diagram.

27. Check circuits for correct functioning and record the modification in the airframe log book.

Drawings

28. Drawing No. G11928 is attached. SHEETS 1&2 AL 16

Effect on Weight and Balance

29. The effect on the weight and balance of the aircraft by the incorporation of this modification is negligible.

References : Files R.A.A.F. 150/4/8552 and 9/84/36
D.H (Aust.) Mod. V149
L.M.C. Meeting No.31

Attachment : Drawing No. G11928. SHEETS 1&2 AL 16

Date of Issue : 10th August, 1953.

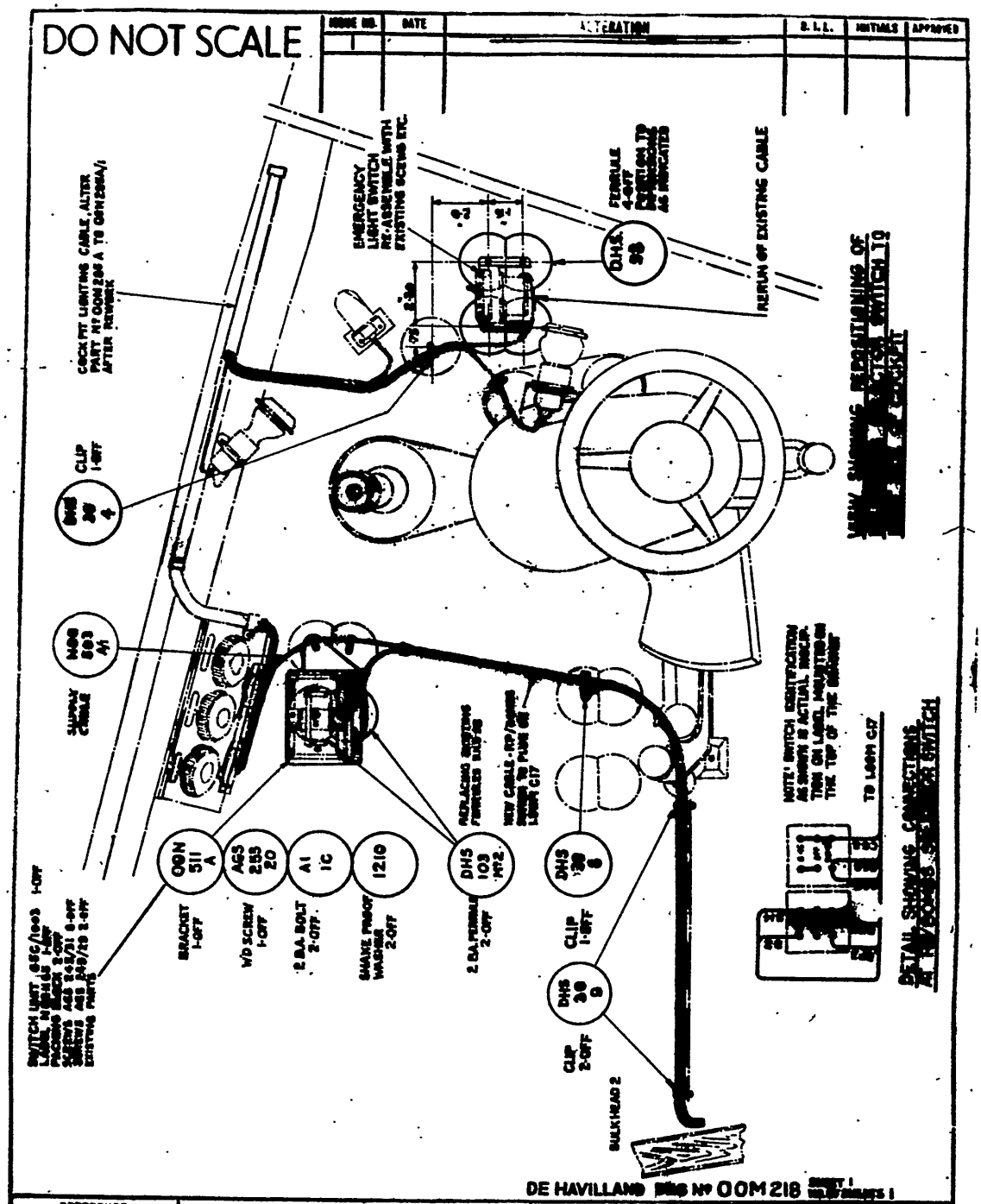
DO NOT SCALE
ISSUE NO.
DATE
ALTERATION
B.I.L.
INITIALS
APPROVED
COCKPIT LIGHTING CABLE, ALTER PART Nº OON 285 A TO OON 285A/1 AFTER REWORK
EMERGENCY LIGHT SWITCH RE-ASSEMBLE WITH EXISTING SCREWS ETC.
FERRULE 4-OFF
RERUN OF EXISTING CABLE
CLIP 1-OFF
SUPPLY CABLE
BRACKET 1-OFF
W/D SCREW 1-OFF
2 BA BOLT 2-OFF
SHAKE PROOF WASHER 2-OFF
2 BA FERRULE 2-OFF
CLIP 1-OFF
CLIP 2-OFF
BULKHEAD 2
TO LOOM C17
DE HAVILLAND DWG Nº OOM 218
REFERENCE
ISSUED BY
DIRECTORATE OF TECHNICAL SERVICES
R.A.A.F.
TITLE
MASTER RP/BOMBS SELECTOR SWITCH REPOSITIONING
LIMITS UNLESS STATED
DECIMALS
MATERIAL
SPEC.
TREATMENT
FINISH
SCALE
SURFACE FINISH AUSTRALIAN STANDARD
COMPONENT OF
COCKPIT
MACHINE
VAMPIRE MK. 31
ENGINE
NENE 2VH
TECH. ORDER
DRAWING NO.
611928
SHEET 1 & 2
DWG. SIZE
A

A L1

DO NOT SCALE

ISSUE NO	DATE	ALTERATION	B.F.L.	INITIALS
1				

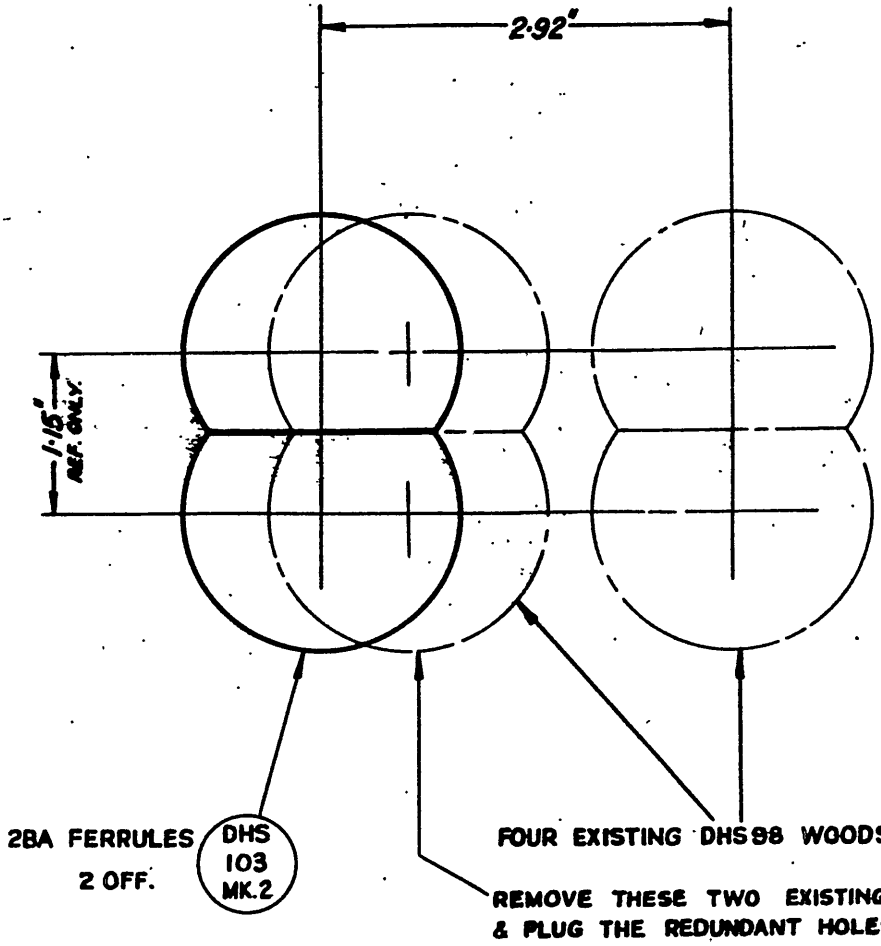

DETAIL SHOWING MOD. TO FERRULES FOR ATTACHMENT OF RP/BOMBS SW.

DE HAVILLAND DRG. Nº 00M218 SHEET: 2 OF SHEETS: 2.

REFERENCE	ISSUED BY	TITLE
	Directorate of Technical Services. R.A.A.F.	MASTER RP/BOMBS SELECTOR SW. REPOSITIONING.

LIMITS UNLESS STATED		MATERIAL	
DECIMALS	±.010"	SPEC.	
FRACTIONS	±1/64"	TREATMENT	
ANGLES	±4°	FINISH	
SURFACE FINISH		SCALE	

COMPONENT OF	Cockpit.
MACHINE	Vampire. Mk.31.
ENGINE	Nene 2 VH.
TECH. ORDER	Vampire Mod No. 67

Air Force Head-Quarters

Technical Order

VAMPIRE MODIFICATION NO. 68

Application: Mk. 30 and 31

Classification: Class 2

ADDITIONAL FUEL DRAIN PIPE IN ENGINE NACELLE - INTRODUCTION

Introduction

1. This modification authorises the introduction of an additional fuel drain pipe from the pressure valve and shut off cock. It will prevent the head of fuel in the manifold forcing drain fuel back up the drain line past the seals in the Plessey pump into the electrical compartment and also past the seals in the fuel pumps into the engine wheel case when the high pressure cock is closed.

General

2. This modification is applicable to Vampire Mk. 30 and 31 aircraft not incorporating the approved equivalent modification, De Havilland (Aust.) Modification V.164. This modification is to be incorporated in conjunction with R.A.A.F. Nene Modification No. 40.

3. This modification is to be incorporated as follows:-

(a) Aircraft in use : On introduction of R.A.A.F. Nene Modification No. 40.

(b) Aircraft undergoing repair and inspection : On introduction of R.A.A.F. Nene Modification No. 40.

(c) No special tools are required.

(d) Man-Hours : Approximately four man-hours per aircraft.

(e) The trade mustering responsibility for the incorporation of this modification is airframe fitter.

Supply

4. The following parts will be required to complete one modification Set:-

Item No.	Ident. No.	Part No.	Nomenclature	No. off Per A/C	Stores Class.
1		00L307ND	Pipe, drain, $\frac{1}{4}$" o/d x 20 SWG, DTD.310	1	
2	H28/6353	AGS.952/B	Collar	1	C

Item No.	Ident. No.	Part No.	Nomenclature	No. off per A/C	Stores Class.
3	H28/5722	AGS.904/B	Sleeve, outer	1	C
4	Il/1444		Wire, locking, 20 SWG soft iron.	As Reqd.	C

Notes:- (a) Items 1 to 3 inclusive will be delivered from De Havilland Aircraft Pty. Ltd. to Sub Master Modification Section 2 Aircraft Depot, which will issue these items on demand.

(b) Item 4 is to be drawn from unit stores.

Salvage

5. No parts will be rendered redundant by the incorporation of this modification.

Method of Incorporation

6. When R.A.A.F. Nene Modification No.40 has been effected, before replacing the bottom cowling proceed as follows:-

(a) Refer Drawing All938, locate the new fitting on the shut off cock and attach the new drain pipe (item 1) in the position as shown on the drawing, using attaching parts (items 2 and 3). Wire lock using item 4.

(b) Refer drawing R.A.A.F. All938 and drill one $\frac{1}{4}$" diameter hole in the access door of the bottom cowling and through the hard red fibre block attached to the access door.

(c) Replace the bottom cowling and the access door taking care that both drain pipes are leading through their correct respective holes in the red fibre block. Cut the pipe end at 45° as shown in the drawing.

(d) Record the modification in the Air Frame Log Book.

Drawings

7. Drawing R.A.A.F. All938 is attached.

Effect on Weight and Balance

8. The effect of the incorporation of this modification on the weight and balance of the aircraft is negligible.

References : Files R.A.A.F. 9/84/74 and 150/4/8556
D.H. Aust. I.L. 215
D.H. Aust. Mod. V.164
Nene Mod. No. 66

Attachment : Drawing All938

Date of Issue : 25th August, 1953.

DO NOT SCALE

ISSUE NO.	DATE	ALTERATION	D. I. L.	INITIALS	APPROVED

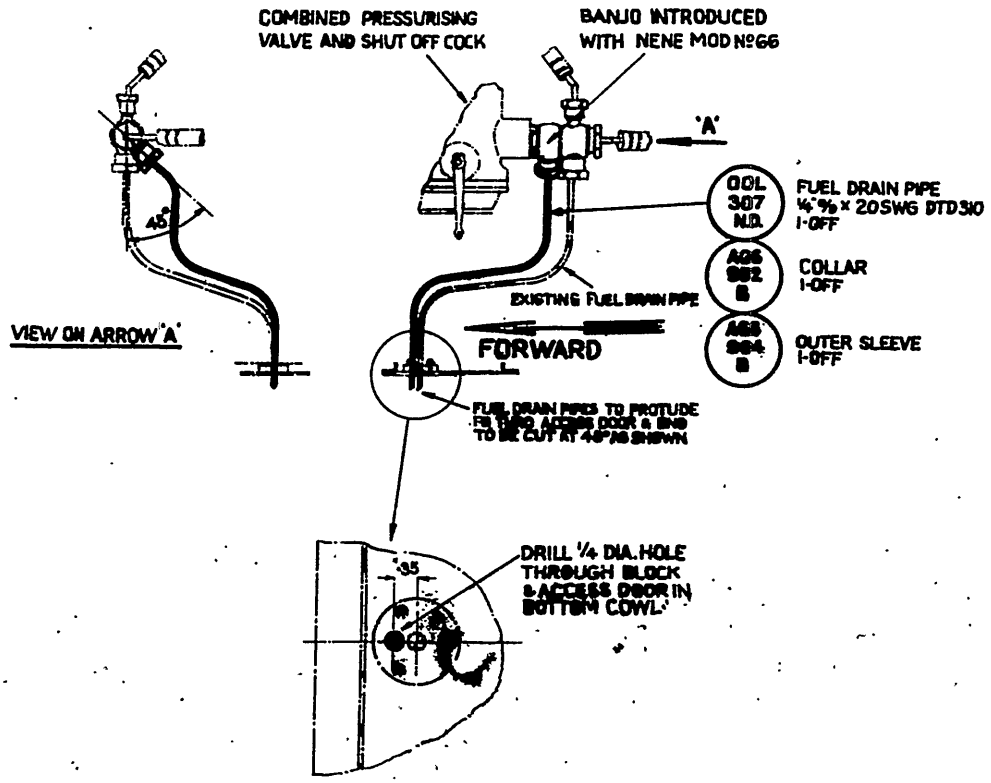

NOTE: THIS MODIFICATION IS TO BE CARRIED OUT IN CONJUNCTION WITH NENE MOD. Nº 66

DE HAVILLAND DRG. Nº 00M215

REFERENCE	ISSUED BY			TITLE		
	DIRECTORATE OF TECHNICAL SERVICES R.A.A.F.			ADDITIONAL FUEL DRAIN PIPE IN ENGINE NACELLE - INTRODUCTION		
LIMITS UNLESS STATED	MATERIAL			COMPONENT OF	FUEL SYSTEM	
DECIMALS ± .010"	SPEC.			MACHINE	VAMPIRE MKS. 30 & 31	
FRACTIONS ± 1/32"	TREATMENT			ENGINE	NENE 2 VH.	
ANGLES ± ½°	FINISH			TECH. ORDER	VAMPIRE MOD. Nº 66	
SURFACE FINISH AUSTRALIAN STANDARD ENG. DRWG. PRACTICE A.S.621	SCALE			DRAWING NO.	A11938	DRWG. A SIZE
	DRAWN		APPROVED			
	TRACED		CHECKED			

Restricted

Air Force Head-Quarters

Technical Order

VAMPIRE MODIFICATION NO. 69

Application: Vampire Mk.53 (see para. 2.a.)

Classification: 2.

NOSEWHEEL DOOR OPERATION - POSITIVE MECHANISM

Introduction

1. This modification authorises the introduction of a new linkage in the nosewheel door operating mechanism to ensure that the nosewheel door fully opens when the nosewheel is lowered during yawed flight and to prevent the nosewheel fouling the door.

General

2. This modification is applicable to Vampire Mk.53 not incorporating the approved equivalent modification, De Havilland (Aust.) modification V.626.

3. This modification is to be incorporated as follows:-

(a) Aircraft in use : As early as possible, but not later than the next minor inspection.

(b) Aircraft undergoing Repair and Inspection : During such repair or inspection.

(c) No special tools will be required.

(d) Man-hours : Approximately 40 man-hours per aircraft.

(e) The trade mustering responsible for the incorporation of this modification is airframe fitter.

Supply

3. The following parts will be required to complete one modification set:-

Item No.	Ident. No.	Part No.	Nomenclature	No. Off Per A/C.	Stores Class.
1		13.FS.3523A	Bearing, lever	1	
2	H28/7063	A25/3C	Bolt, 2BA x .75" lg. hex., H.T.S.	8	C
3	H28/7284	A25/14C	Bolt, 2BA x 1.85" lg. hex., H.T.S.	2	C
4	H28/7301	A25/20E	Bolt, 1/4" BSF x 2.5" lg. hex., H.T.S.	2	C

Item No.	Ident. No.	Part No.	Nomenclature	No. off per A/c.	Stores Class.
5		13.FS.3495ND	Cap, lever	1	
6		13.FS.3517	End, fork	1	
7		13.FS.3565A	Lever, operating	1	
8		13.FS.3497ND	Lever, nosewheel barrel	1	
9		13.FS.3645A	Link, connecting	2	
10	H28/10216	AGS.2008/ C/1	Nut, double anchor, 2 BA, M.S.	2	C
11	H28/10288	AGS.2001/ C/1	Nut, stiff, 2 BA. M.S.	6	C
12	H28/768	A16Y/ES	Nut, slotted 1/4" BSF	2	C
13	H28/767	A16Y/CS	Nut, slotted, 2BA.	1	C
14	H28/760	A16Y/JP	Nut, 5/8" BSF	1	C
15	H28B/5508	SP4/Z/D6	Pin, 1/4" dia. x .5" lg. cold headed	1	C
16	H28B/5960	SP4/Z/D9	Pin, 1/4" dia. s .65" lg. cold headed	1	C
17	H28B/5032	SP9/C8	Pin, split, 1/16" dia. x 1" long	8	C
18		13.FS.3529ND	Plate, packing	1	
19	H128F/62231	AS2229/306	Rivet, 3/32" dia. x 3/8" lg. csk. 90° alum. alloy	4	C
20	H128F/30269	AS2227/406	Rivet, 1/8" dia. x 3/8" lg.sn.hd. alum.al.	8	C
AL 10 21	H128F/~~30268~~ 62510	AS2229/406	Rivet, 1/8" dia. x 3/8" lg. csk. 90° alum. al.	2	C
22	H128F/62071	AS2229/506	Rivet, 5/32" dia. x 3/8" lg. csk. 90° al. al.	2	C
23		13.FS.3507A	Rod, connecting	1	
24		Z15-29ND	Screw, locking	1	
25		13.FS.3509ND	Spigot	1	
26		13.FS.3551ND	Stiffener, top hat	1	
27		AS2806/4/142	Tube, distance	2	
28		13.FS.3573ND	Washer, special	1	
29		13.FS.3569ND	Washer, special	1	
30		SP14/E	Washer, 1/4" BSF	2	
31	H28C/12496	SP15/E	Washer, 1/4" BSF	2	C
32	H28C/12521	SP15/J	Washer, 3/8" BSF	1	C
33	H28/787	A16Y/GTL	Nut, slotted, 5/16" BSF	1	C
34	K4/10026		Compound, seaming to spec. DTD.369A	AR.	C

Notes: (a) Items 1 to 33 inclusive are to be delivered from De Havilland Aircraft Pty.Ltd. to Sub-Modification Section, No.2 Aircraft Depot, Richmond. N.S.W.

(b) Item 34 is to be drawn from unit stores.

Salvage

4. The following parts will be rendered redundant by the incorporation of this modification:-

Item No.	Ident. No.	Part No.	Nomenclature	No. Off Per A/c.	Stores Class.
35	H128F/30237	AS2229/405	Rivet, 1/8" dia. x 5/16" lg. csk. 90° al. al.	2	C
36	H128F/30281	AS2227/506	Rivet, 5/32" dia. x 3/8" long, sm.hd., al. al.	2	C
37	H28B/5032	SP9/C8	Pin, split, 1/16" x 1" long	4	C
38	H28/7277	A25/2C	Bolt, 2 BA x .65" long, hex, H.T.S.	2	C

Note: Items 35 to 38 inclusive will be disposed of in accordance with current authorised procedure.

Method of Incorporation

5. This modification will be incorporated in the following sequence of operations:-

(a) Trestle the aircraft and remove the L.H. cannon spout fairing from the aircraft, thus gaining access to the outboard face of the R.H. nosewheel housing sidebeam.

(b) Refer drawing A11983 and carefully measure the position of the new lever bearing on the inboard face of the nosewheel housing sidebeam in accordance with the dimensions shown.

Note:- It is essential to locate the above position as thoroughly as possible, otherwise, it may be found later that the two connecting links foul the attachment bracket on the sidebeam.

(c) Using the lever bearing (item 1) as a template, drill through the six bolt holes in the side beam with a No.11 drill (0.1910" diameter).

(d) Now temporarily bolt the two anchor nuts (item 10) to the outer face of the side beam, picking up on their respective bolt holes, and open up the rivet holes in the sidebeam. Countersink the holes on the inboard face 90° x 0.16" diameter. The anchor nuts should be positioned as indicated to clear the top hat stiffener.

(e) Locate and drill out the rivets (items 35 and 36) in the top and bottom boom which are in the way of the new top hat stiffener. Fit and countersink the new rivets (items 21 and 22) in lieu as indicated on the drawing, so that the top hat stiffener will seat correctly.

(f) Now remove the two 2BA bolts (item 38) which fall within the area that will be covered by the top hat stiffener. Retain the nuts and washers.

(g) Position the new top hat stiffener (item 26) on the outboard face of the sidebeam. Then mark two lines on the flanges of the stiffener coinciding with the inner edges of the top and bottom booms, marked edge 'A' and edge 'B' respectively on the drawing. Using these lines as datum lines, mark out and drill the eight No.30 rivet holes in the flanges of the stiffener.

(h) Reposition the top hat stiffener on the sidebeam and using a No.30 drill, open out the eight rivet holes in the sidebeam to match the holes in the stiffener.

(i) Temporarily remove the top hat stiffener again and insert the new packing plate (item 18) under the stiffener and between the edges of top and bottom boom. All the rivet holes and bolt holes in the sidebeam may now be opened out through the packing place and stiffener. Deburr all holes and apply seaming compound (item 34) to all mating surfaces.

(j) Firstly rivet the packing piece together with the anchor nuts to the sidebeam, utilising the four rivets (item 19) which fasten the anchor nuts. Then secure the top hat stiffener to the packing plate, and sidebeam using eight rivets (item 20).

(k) Insert the two new bolts (item 2) through the top beam and stiffener and secure with the washers and nuts retained in sub-paragraph (f).

(l) Assemble the lever bearing to the inboard face of the sidebeam using six bolts (item 2) and four nuts (item 11).

(m) Disconnect and remove the upper radius rod from the nosewheel door operating mechanism. Retain all the securing items but discard the split pins (item 37). Refer drawing A.11983, mark off and drill a letter 'F' hole on the centreline of the radius rod 2" from the centre of the upper securing hole. Spotface the surface around the hole. Replace the radius rod using split pins (item 17) where required.

(n) Attach the two connecting links (item 9) to the upper radius rod, inserting the distance tube (item 27) through the links and the letter 'F' hole. Secure the links with a nut and bolt (items 11 and 3 respectively).

(o) Secure the fork end (item 6) to the lower end of the links, again using a distance tube, a bolt and a nut (items 27, 3 and 11).

(p) Assemble the operating lever (item 7) to the lever bearing using special washer (item 28), nut (item 13) and a split pin (item 17). Then assemble the fork end to the new lever with attaching parts, items 16, 30 and 17.

Note: When moving the operating lever after the fork end has been connected up, the two connecting links should clear the attachment bracket on the nosewheel housing side beam.

(q) Before the fork end of the connecting rod (item 23) is fastened to the longer arm of the operating lever, it should be screwed into the connecting rod so that it can be adjusted an equal amount in both directions.

(r) Assemble the fork end to the operating lever using attaching parts (items 15, 30 and 17).

(s) Refer the drawing and assemble the cap (item 5) and the lever (item 8) to the nosewheel barrel as shown, using the connecting rod as a guide to determine the correct position of the lever, which should make an angle with the horizontal of approximately 30°.

Note: To facilitate fitment of lever assembly Z15-27A for retrospective action, the nosewheel barrel may be filed locally to remove the high spots only, so as to give a fairly regular contour. Filing is to be kept to an absolute minimum and afterwards treated with selenius acid solution and primed and painted. Further dressing necessary to obtain a reasonable fit is to be carried out on the lever.

(t) When they have been satisfactorily aligned, mark off, remove the cap and lever and drill a No.11 hole to a depth of .5" into the barrel to suit the lock screw.

(u) Re-assemble the cap and lever using two bolts (item 4) two nuts (item 12), two washers (item 31) and two split pins (item 17). Secure with the lock screw (item 24). Attach the sliding link of the connecting rod to the lever using items, 17, 14, 33, 32 and 29.

(v) Adjust the fork end so that when the undercarriage is locked down, the upper radius rod is fully down.

(w) Retract the undercarriage to check that the linkage is functioning correctly. If necessary, adjust the length of the lower radius rod to obtain the required fit of the door to the under surface of the fuselage.

(x) Lower the undercarriage, replace the cannon spout fairing and record the modification in the airframe log book. Remove the trestles.

Drawing

6. Drawing All983 is attached.

Effect on Weight and Balance

7. The effect of the incorporation of this modification on the weight and balance of the aircraft is as follows:-

Fixed Equipment

Item	Weight (lb.)	Arm (in.)	Moment (Min.)
Lever bearing and fittings	2.1	-109.0	-229

Amendments to Weight sheet summaries will be consolidated and issued by Air Force Head-Quarters.

References : Files R.A.A.F. 9/84/91 - 150/4/8560
D.H. Aust. Mod. B626
L.M.C. Meeting No. 38
A.M. Mod. VAM. 3236

Attachment : Drawing All983

Date of Issue : 17th September, 1953.

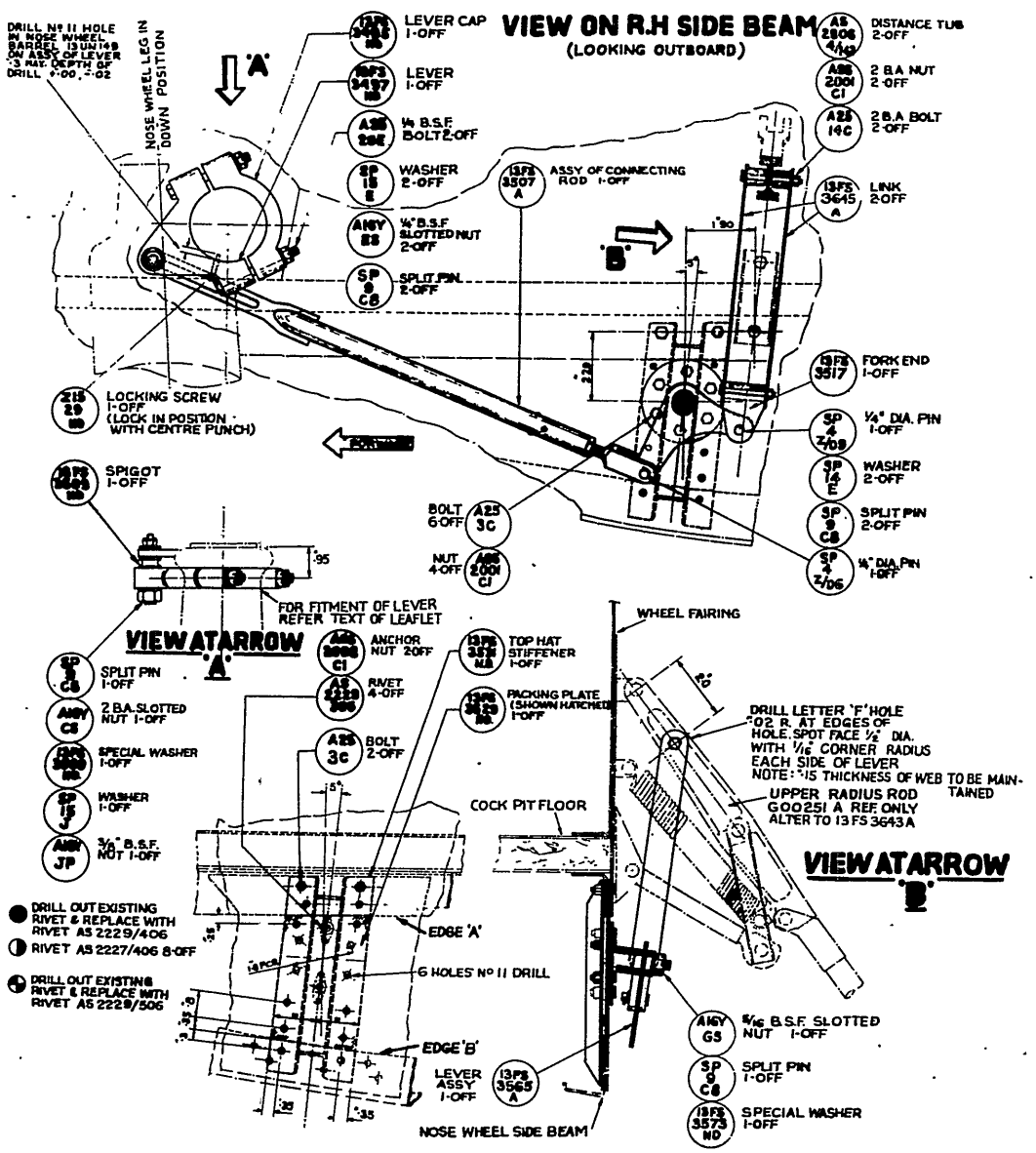

DE HAVILLAND DRG. Nº OOM233 SHEET Nº 1 Nº OF SHEETS 1

REFERENCE		ISSUED BY		TITLE	
		DIRECTORATE OF TECHNICAL SERVICES R.A.A.F		NOSE WHEEL DOOR OPERATION POSITIVE MECHANISM	
LIMITS UNLESS STATED		MATERIAL		COMPONENT OF	UNDERCARRIAGE
DECIMALS	± ·010"	SPEC		MACHINE	VAMPIRE MK.33
FRACTIONS	± 1/32"	TREATMENT		ENGINE	~~NENE 3XH~~ GOBLIN
ANGLES	± 1/2°	FINISH		TECH. ORDER	VAMPIRE MOD. Nº 69
SURFACE FINISH AUSTRALIAN STANDARD ENG. DRWG PRACTICE A.S C21		SCALE		DRAWING Nº	A-11983
		DRAWN	APPROVED		
		TRACED	CHECKED		

AL 10

Air Force Head-Quarters

Technical Order

VAMPIRE MODIFICATION NO. 70

Application: Mk.30 & 31 (see para.2)

Classification: Class 2.

SPOILER STRIP ON ELEVATOR TRAILING EDGE - INTRODUCTION

Introduction

1. This modification authorises the introduction of a redesigned spoiler strip on the elevator trailing edge to eliminate elevator over-balance up to the limiting mach number 0.78.

General

2. This modification is applicable to Vampire Mk.30 and 31 aircraft not incorporating the approved equivalent modification De Havilland (Aust.) modification V.165.

3. This modification is to be incorporated as follows:-

(a) Aircraft in use : Not later than the next minor inspection after receipt of modification sets.

(b) Aircraft undergoing repair and inspection : During such repair or inspection

(c) Spares : Modification of spares to be carried out at direction of Maintenance Group Headquarters Elevator, Part No.J00601A/4 - A79/501728 to be reworked to 00J27AND - A79/502095.

(d) No special tools will be required.

(e) Man-hours : Approximately 8 man-hours per aircraft.

(f) The trade mustering responsibility for the incorporation of this modification is airframe fitter.

Supply

4. The following parts will be required to complete one modification set:-

Item No.	Ident. No.	Part No.	Nomenclature	No. off per A/C.	Stores Class.
1		J001895ND	Strip, spoiler	1	
2	H128F/5730	AS2230/305	Rivet, 3/32" dia. x 5/16" long, csk. 120° alum. alloy	35	C
3	K4/10026		Compound, seaming to Spec. DTD.369A	AR	C
4	K3/162		Enamel Cellulose	AR	C
5	K3/175		Zinc Chromate	AR	C

NOTE: Item 1 and 2 will be delivered from De Havilland Aircraft Pty. Ltd. to Sub Modification Section No.2 Aircraft Depot, who will issue these items to units on demand.
Items 3, 4 and 5 are to be drawn from unit stores.

Salvage

5. The following parts will be rendered redundant by the incorporation of this modification.

Item No.	Ident. No.	Part No.	Nomenclature	No. off per A/C.	Stores Class.
6		J001718ND	Strip, balance	1	
7	H128F/5730	AS2230/35	Rivet, 3/32" dia. x 5/16" long, csk. 120° alum. alloy	35	

NOTE: Items 6 and 7 are to be disposed of in accordance with current authorised procedure.

Method of Incorporation

6. This modification will be incorporated in the following sequence of operations:-

(a) Lock the elevator controls. Locate the elevator trailing edge balance strip on the starboard side of the trim tab. Carefully drill out the thirty-five rivets (item 7) preventing elongation of the holes in the trailing edge. Remove and discard the balance strip (item 6).

(b) Remove all burrs and metal dust from the elevator.

(c) Refer drawing A.11966 and position the new spoiler strip as shown. Mark off and drill rivet holes to line up with the existing holes in the trailing edge.

(d) Deburr and dimple the holes in the new strip. Apply seaming compound (item 3) to all mating surfaces and secure the spoiler strip to the elevator using rivets (item 2).

(e) Repair the finish locally by priming and spraying, matching the existing colour scheme (Refer A.E.I.G. Part 2, Section 1, Instruction 10, Appendix "E").

(f) Alter the part number of the elevator assembly J0060lA/4 to read 00J27AND and remove the locks from the elevator controls.

(g) Record the modification in the Airframe Log Book.

Drawings

7. Drawing A.11966 is attached.

Effect on Weight and Balance

8. The effect of the incorporation of this modification on the weight and balance of the aircraft is negligible.

References : Files R.A.A.F. 150/4/8559 and 9/84/275
D.H. Aust. Mod. V165
A.M. Mod. VAM.3115
L.M.C. Meeting No.38

Attachment : Drawing A.11966

Date of Issue : 17th September, 1953.

DO NOT SCALE

ISSUE NO	DATE	ALTERATION	D.I.L.	INITIALS	APPROVED
1					

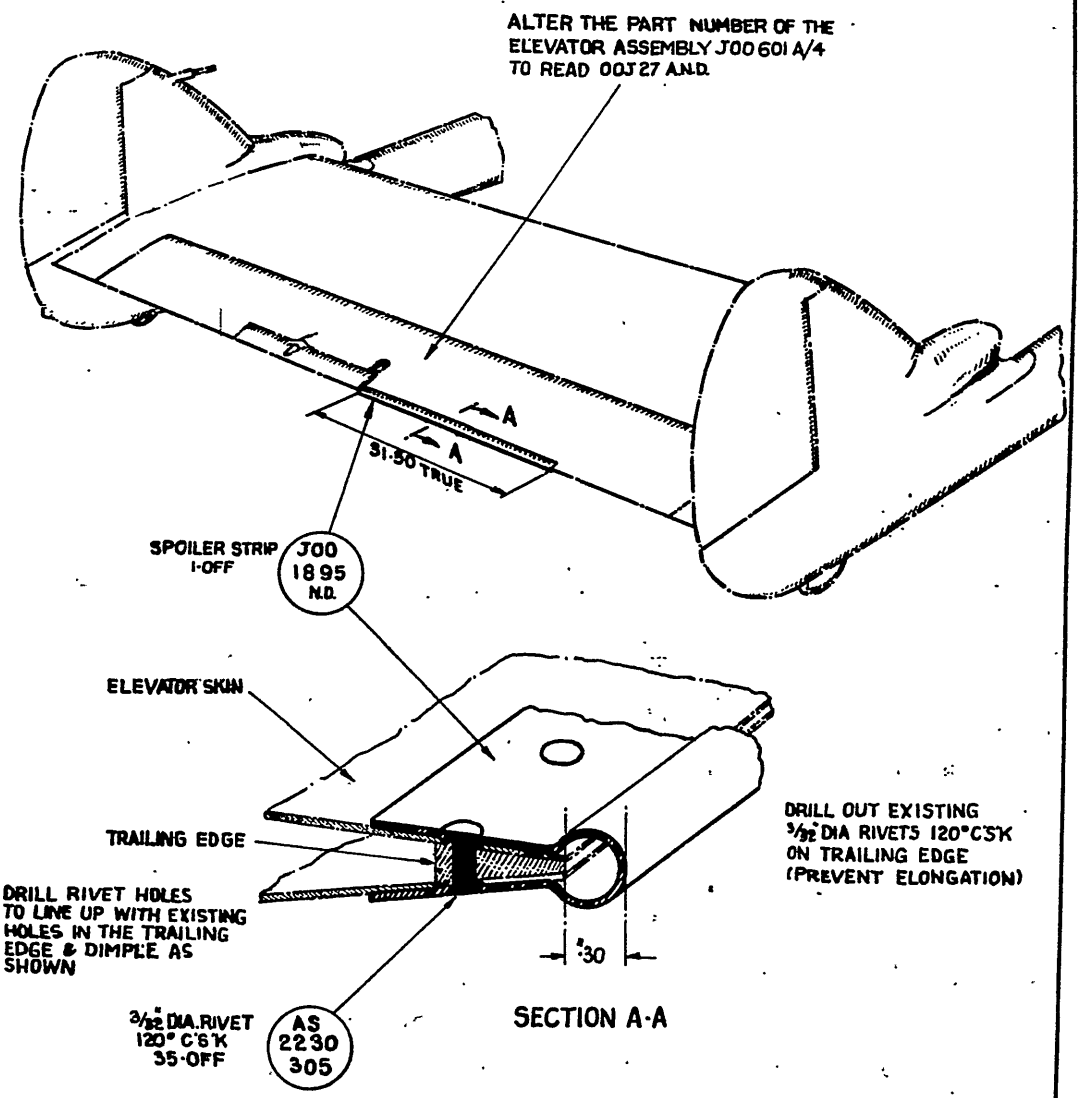

SECTION A-A

DE HAVILLAND DRG. Nº 00M 234 SHEET 1 Nº OF SHEETS 1

REFERENCE	ISSUED BY	TITLE
	DIRECTORATE OF TECHNICAL SERVICES R.A.A.F.	SPOILER STRIP ON ELEVATOR TRAILING EDGE - INTRODUCTION

LIMITS UNLESS STATED		MATERIAL				COMPONENT OF	TAILPLAIN ASSEMBLY	
DECIMALS	±.010"	SPEC.				MACHINE	VAMPIRE MK.	
FRACTIONS	±1/32"	TREATMENT				ENGINE	NENE 2VH	
ANGLES	±½°	FINISH				TECH. ORDER	VAMPIRE MOD. Nº 70	
SURFACE FINISH AUSTRALIAN STANDARD ENG. DRWG. PRACTICE AS.CZ1		SCALE				DRAWING NO.	A-11966	DRWG. A SIZE
		DRAWN		APPROVED				
		TRACED		CHECKED				

Restricted

Air Force Head-Quarters

Technical Order

VAMPIRE MODIFICATION NO. 71

Application: Mk.30 and Mk.31 (See para 2a)

Classification: Class 2

JETTISON BOMB/DROP TANK RELEASE MECHANISM - MODIFICATION

Introduction

1. This modification authorises the introduction of guards at both quadrants on the torque tube of the jettison gear for bomb drop tank release mechanism and re-rigs the controls. Cases of the bombs, complete with fairings, being inadvertently released have been reported and these guards prevent the teleflex inner control from kinking.

General

2. (a) This modification is applicable to Vampire Mk.30 and 31 aircraft not incorporating the approved equivalent modification, De Havilland (Aust.) modification V.126.

(b) This modification is to be incorporated as follows:-

Aircraft in use	:	As soon as possible but not later than the next minor inspection.
Aircraft undergoing repair and inspection.	:	During such repair or inspection.

(c) Refer paragraph 9 and drawing A11973 for special spanner.

(d) Man-hours : Approximately 20 man-hours per aircraft.

(e) The trade mustering responsibility for this modification is airframe fitter.

Supply

3. The following parts will be required to complete one modification set:-

Item No.	Ident. No.	Part No.	Nomenclature	No. off per A/C.	Stores Class.
1		B003303ND	Sleeve, Split, inner	2	
2		B003481AND	Guard, L.H.	1	
3		B003482AND	Guard, R.H.	1	

Item No.	Ident. No.	Part No.	Nomenclature	No. off per A/C	Stores Class.
4	H28B/30532	DHS94/5/102	Pin HTS 5/32" dia. x 1.2.L	6	
5		B00330lND	Sleeve, outer	1	
6	H28B/7076	A1/8C	Bolt Steel 2BA x 1.2"	4	
7	H28C/12252	SP13/C	Washer M/S Plain	8	
8	H28/10328	AGS2002/C1	Nut thin 2 BA	4	
9	H128F/30508	1214	Washer, shakeproof Steel	1	

NOTE: Items 1 - 9 will be delivered from De Havilland Aircraft Pty.Ltd. to Sub-Modification section 2AD. Sub-modification section will issue the set on demand.

Salvage

4. No parts will be rendered redundant by the incorporation of this modification.

Method of Incorporation

5. The following is the sequence of operations for embodiment of this modification:-

(a) Remove the pilot's seat in accordance with current authorised procedure.

(b) Disconnect the teleflex at the quadrants and retain the lock springs and the screw plugs.

(c) Scribe a line along the torque shaft to ensure correct mating after sleeving (refer paragraph p).

(d) Mark off and saw the shaft in two, (see dimensions on drawing A-11973).

(e) Remove and retain the nine fixing bolts securing the torque shaft to the bulkhead. Use the special spanner detailed on drawing A11973 which is Unit Manufacture.

(f) Remove the torque shaft from the aircraft.

(g) Refer drawing A11973. To ensure correct alignment on reassembly, scribe a line along the quadrant and tube at each end. Proceed now to carefully file off the ends of the pins securing the quadrants to the shaft and gently punch out to free.

(h) Fit the inner split sleeves (item 1) at each end of the shaft as indicated on drawing.

(i) After ensuring that each quadrant is in its original position, mark off and drill two 9/64" diameter holes each side, through the quadrant, sleeves and tube, positioned at 90° to the original ones. Ream to 5/32" diameter to obtain a light drive fit for the pins.

(j) Remove the quadrants, place inside the guards (item 2, L.H. and item 3, R.H.) and then slide on to the ends of the torque shaft.

(k) Again check that each quadrant is in its original position and then secure the quadrants and guards with ground steel pins (item 4) and rivet over.

(l) Remove the pine securing the stop arm to the shaft.

(m) Refer drawing A11973 again and set the stop arm to an angle of 78° in relation to the lever and mark off. Drill two 9/64" diameter holes at 90° to the original holes. Ream to 5/32" diameter to obtain a light drive fit for the pins.

NOTE: To ensure correct relationship between the operating lever and the stop arm, use a surface plate and 'Vee' block with metal template or bevel protractor.

(n) Secure the stop arm to the shaft with ground steel pins (item 4) and rivet over.

(o) Unscrew the stop bolt, place a shake-proof washer (item 9) under the locknut and screw the bolt in the stop arm in the reverse direction, so that it is flush with the rear face and lock.

(p) Slide the sleeve (item 5) on to the sawn off ends of the torque shaft. Ensure that the line already scribed in paragraph c coincides on both halves.

(q) Mark off and drill four No.11 holes for the joint. It is important that the original overall length of the torque tube is maintained by leaving 1/16" gap at the joint to allow for the saw cut. Alter part number of assembly to read B00552A/1 in lieu of B00552A.

(r) Slide jointing sleeve on one half of the torque tube. Replace the tube in the aircraft and secure to the bulkhead with the nine bolts retained in paragraph e, and then secure the jointing sleeve with four bolts (item 6), four nuts (item 8) and eight washers (item 7).

(s) Reconnect the teleflex to the quadrants.

(t) Move the jettison handle until the knob is $1\frac{1}{2}$" from its "fully up" position. Securely hold the knob in this position during the following cable adjustment:

With both control cables slackened right off and both the slip units fully cocked, carefully tension up the cables until both the slips release.

NOTE: (i) This method will provide the maximum possible amount of slack and still ensure release of both slips.

(ii) Care must be taken not to get a false reading by moving cables up and down when adjusting the jettison handle.

(u) Check the release after rigging by hanging suitable weights on the slips and moving the jettison lever very slowly. The slow movement will enable an accurate check to be made as to where the actual release point occurs in relation to end of travel.

(v) Replace the pilot's seat.

(w) Record the modification in the airframe log book.

Drawings

6. Drawing A11973 attached herewith.

Effect on Weight and Balance

7. The effect of this modification on the weight and balance of the aircraft is negligible.

References : Files R.A.A.F. 9/84/146 - 150/4/8575
D.H. Aust. Mod. V126
A.M. Mod. Vam. 973
L.M.C. Meeting No. 25

Attachment : Drawing A-11973.

Date of Issue : 10th August, 1953.

DO NOT SCALE

ISSUE No.	DATE	ALTERATION	INITIALS
1			

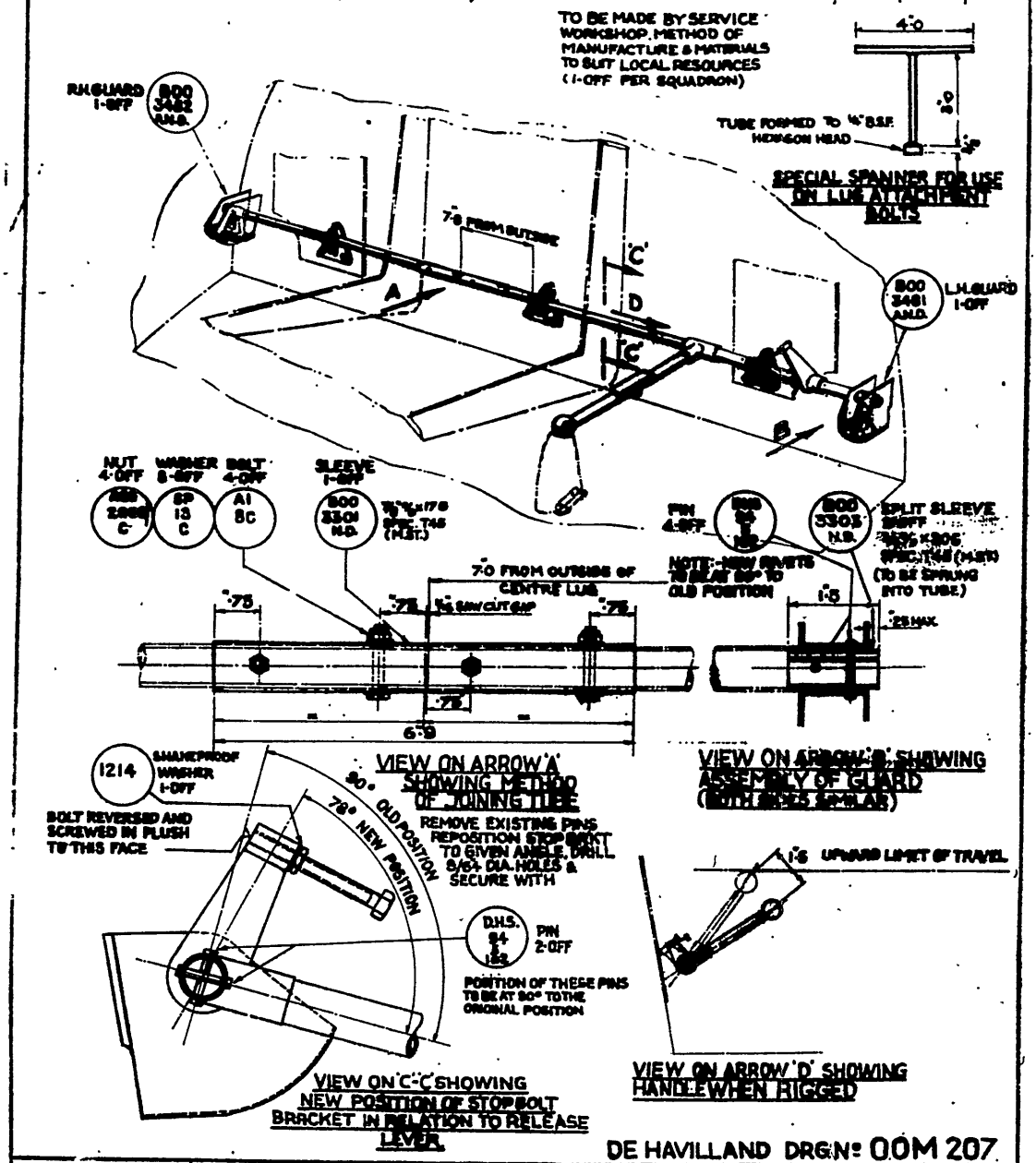

DE HAVILLAND DRG Nº 00M 207

REFERENCE	ISSUED BY	TITLE
	Directorate of Technical Services. R.A.A.F.	JETTISON BOMB/DROP TANK RELEASE MECHANISM - MODIFIED

LIMITS UNLESS STATED		MATERIAL		COMPONENT OF	Cockpit
DECIMALS	± .010"	SPEC.		MACHINE	Vampire Mk. 30 & 31
FRACTIONS	± 1/32"	TREATMENT		ENGINE	Nene - 2VH
ANGLES	± ½°	FINISH		TECH. ORDER	Vampire Mod. No. 71.
SURFACE FINISH AUSTRALIAN STANDARD ENG. DRWG. PRACTICE A.S.E.21		SCALE		DRAWING NO.	A-11973
		DRAWN	APPROVED		DRWG. A SIZE
		TRACED	CHECKED		

Air Force Head-Quarters

Technical Order

VAMPIRE MODIFICATION NO. 72

Application: Mk.30 & Mk.31 see para. 2a.

Classification: Class 2.

UNDERCARRIAGE JACK - LARGER DIAMETER

Introduction

1. This modification authorises the introduction of a larger diameter undercarriage jack. The extra power, thus provided, will enable the undercarriage to be retracted at higher flying speeds.

General

2. (a) This modification is applicable to Vampire Mk.30 and 31 aircraft not incorporating the approved equivalent modification, De Havilland (Aust.) Modification V.135.

(b) This modification is to be incorporated as follows:-

Aircraft in use	:	As soon as possible but not later than the next minor inspection or at the incorporation of D.H.(Aust.) Mod. V.130 Part "A", whichever is the earliest.
(c) Aircraft undergoing repair or inspection	:	During such repair or inspection.

(d) No special tools are required.

(e) Man-Hours	:	Approximately 16 man-hours per aircraft.

(f) The trade mustering responsibility for this modification is airframe fitter.

Supply

3. The following parts will be required to complete one modification set:-

Item No.	Ident. No.	Part No.	Nomenclature	No. off per Set	Stores Class.
1	T27M/587	AIR.41192	Jack Main U/C Hydraulic Group	2	
2	A79/502008	G001707	Fork-End, Jack Ram	2	
3	A79/502009	G001571	Nut, Lock	2	
4	H28B/5031	AGS784/2	Pin, Split 1/16" x $\frac{3}{4}$" long	4	
5	H28B/5032	AGS784/3	Pin, Split 1/16" x 1" long	2	

"NOTES (a) Items 1 and 3 will be delivered from De Havilland Aircraft Pty. Ltd., to Master Modification centre. Master Modification Centre will issue these items on demand.

(b) Items 4 and 5 will be drawn from unit stores."

Salvage

4. The following parts will be rendered redundant by the incorporation of the modification:-

Item No.	Ident. No.	Part No.	Nomenclature	No. off per Set	Stores Class.
6	T27M/456	AIR40010	Jack	2	
7	A79/500797	G001090	Fork-End, Jack Ram	2	
8	A79/501465	G00195	Nut, Lock	2	

Note:- Items 6 to 8 will be examined and if serviceable returned to store for use as spares pending modification of all aircraft.

Method of Incorporation

5. The following is the sequence of operations for incorporating this modification:-

(a) Trestle the aircraft in accordance with A.A.P.828, figure 9, and with the main wheel units down release the hydraulic pressure from the accumulator.

(b) Refer A.A.P.828, Section 5, paragraph 179 and disconnect the hydraulic hoses from the jack.

(c) Disconnect, and retain for reassembly, the bolt, &c., holding the lower end of the radius rod to the radius rod pick up.

(d) Unbolt and remove the small fairing in the way of the compression leg from the boom. Retain all attachments.

(e) Temporarily unclip the two hydraulic hoses from the diaphragm in order to provide access and then remove and retain the top jack attachment bolt.

(f) Now swing the compression leg inboard, again to provide access, until the bottom attachment bolt of the jack is in line with the dial brake inspection hole. Remove the jack, fork end, nut and bolt. Retain the bolt but dispose of the jack (item 6) fork end (item 7) and nut (item 8).

(g) Assemble the new fork end (item 2) and locknut (item 3) to the lower end of the new jack (item 1) and then instal in position using the bolts &c. retained in preceding operation. Lock the two nuts with new split pins (item 4).

(h) Resecure the radius rod to the radius rod pick up and lock the nut with a new split pin (item 5).

(i) Reassemble the hydraulic hoses and refit the clip removed in sub-paragraph (e).

(j) Refit and secure the small fairing to the boom, using the original attachments.

(k) Alter modification of both the port and the starboard unit re-charge the accumulator, retract the undercarriage, and check for correct functioning.

(l) Remove the trestles.

(m) Record the modification in the Airframe Log Book and on the wing modification plate.

Drawings

6. No drawings will be required for the incorporation of this modification.

Effect on Weight and Balance

7. The effect of this modification on the weight and balance of the aircraft is negligible.

References : Files R.A.A.F. 9/84/91 and 150/4/8576.
D.H.Aust. Mod. V135.
A.M. Mod. Vam.676
L.M.C. Meeting No. 26.

Date of Issue : 29th September, 1953.

Restricted

Air Force Head-Quarters

Technical Order

VAMPIRE MODIFICATION NO. 73

Application: Mk.30 & 31 see para.2

Classification: Class 2

DETACHABLE NOSE PANEL - IMPROVED CATCH

Introduction

1. This modification authorises the introduction of an improved catch for the detachable fuselage nose panel, following service reports that the existing item worked loose during extended gun firing trials. Consequent loss of the panel in flight is then eliminated.

General

2. This modification is applicable to Vampire Mark 30 and 31 aircraft not incorporating the approved equivalent modification De Havilland modification V117.

3. This modification is to be incorporated as follows:-

(a) Aircraft in use : As soon as possible but not later than next minor inspection after receipt of modification sets.

(b) Aircraft undergoing repair and inspection : During such repair or inspection

(c) Spares : Modification of spares is to be carried out at direction of Headquarters Maintenance Command.

(d) Spares : Detachable nose panels Pt.No. A00891A/1- A79/500557 to be reworked to A00891A/2 - A79/501997.

(e) No special tools are required.

(f) Man-Hours : Approximately fifteen (15) man-hours per aircraft

(g) The trade mustering responsibility for the incorporation of this modification is airframe fitter.

Supply

4. The following parts will be required to complete one modification set:-

Item No.	Ident. No.	Part No.	Nomenclature	No. off per a/c	Stores Class.
1	A79/502002	12F655A	Pin, locating	2	C
2	A79/501998	12F651A	Plunger, spring assy	1	
3		00A181AND	Housing, Pin	1	
4	H28C/2815	AGS249/22	Screw, 4BA x 1/2" long csk. hd. M.S.	6	
5	H128F/10412	AS2230/404	Rivet, AL.ALY 1/8" x [illegible]	8	

Vampire Modification No.73, paragraph 5, item 6, insert by columns

"H28/7271	A25/1B or 6A1/1B	Bolt, Hex.hd., H.T.S., 4BA x .5" long Bolt, M.S. hex.hd., 4BA x .45" long."

in lieu of

"H28/7013	6A1/1B	Bolt, 4BA x .45" long HE.HD.".

Notes:- (a) Items 1 to 10 inclusive will be delivered from [illegible]avilland Aircraft Pty. Ltd. to Sub-modification Section No.2 Aircraft Depot, which will issue these items on demand.

(b) Item 11 is to be drawn from unit stores.

Salvage

5. The following parts will be rendered redundant by the incorporation of this modification:-

Item No.	Ident. No.	Part No.	Nomenclature	No. off per a/c	Stores Class.
12	A79/500560	A00912A	Plunger, spring	1	
13		A00916A	Pin, Locating	2	
14	H128F/10412	AS2230/404	Rivet, 1/8" x 1/4" long csk.hd.	14	
15	A79/500559	A00908A	Bolt Assy	1	
16	H28/10287	B.P.1	Nut, 4 BA	2	
17	H128F/31627	AS2227/403	Rivet	2	
18	H28/758	A16Y/GP	Nut, 5/16" B.S.F.	2	

Note:- Items 12 to 18 inclusive are to be disposed of in accordance with current authorised procedure.

Method of Incorporation

6. This modification is to be incorporated in the following sequence of operations:-

(a) Remove the detachable nose panel from the aircraft. Open the hinged door on the forward face of the bulkhead and thus gain access to the nuts, securing the existing locating pins on its aft face.

(b) Remove the two lower locating pins (item 13), and two nuts (item 18) and replace with the two new pins (item 1), which are to be secured with the original washers and two new nuts (item 10). Rivet ends of pin thread over to lock. (Apply Bostic 1751 and 1790 K4/10882-3).

(c) Remove the existing spring plunger (item 12) from the fixed nose and replace it with the new assembly (item 2), using the original attaching parts. Check that the cap nut at the base of the new plunger assembly is finger tight and then wire lock to the front peg as shown on drawing A11989, using 18 swg locking wire (item 11).

(d) Refer drawing A11989 sheet 2, using a No.32 (.116 in diameter) drill, remove the ten 1/8 inch diameter csk. hd. rivets (item 14), securing the bolt assembly (item 15) to the detachable nose panel. Disconnect and retain the two bolts and washers and remove the bolt assembly. Discard the two nuts (item 16). To facilitate removal of bolt assembly, drill out the four lower rivets (item 14) and bend upper brackets back.

(e) Open out the existing 9/16 inch diameter hole in the skin to 3/4 inch diameter.

(f) Fit the new pin housing (item 3), cut back the flange to suit the new bracket (see sub-paragraph (g)) and secure with two new nuts (item 8) and the bolts and washer retained in sub-paragraph (d) and four new rivets (item 5) which have to be fitted in the four holes, left open in the detachable nose skin.

(g) Attach the pin housing to the front lap plate using four screws &c. (item 4, 7 and 8) in the holes nearest to the front.

Note: Open out the six holes in the front lap plate using a No.27 drill.

(h) Position the new bracket (item 9) after drilling out the two rivets, (item 17) holding the packing piece, as shown on the drawing. Mark off and drill four No.27 holes in the web flange to suit the bracket. Secure the bracket in position using four bolts &c. (items 6, 7 and 8) and two screws &c. (items 4, 7 and 8). Rivet the lower end of the support brackets, previously disconnected, using four new rivets (item 5).

(i) Alter the external markings on the detachable nose panel in 1/2 inch black letters to read "Press and Pull Forward". Alter the part number of the detachable nose panel A00891A/1 to read A00891A/2.

(j) Check for correct function of the spring plunger.

(k) Record the modification in the Airframe Log Book.

Drawings

7. Drawing A11989 Sheets 1 and 2 are attached herewith.

Effect on Weight and Balance

8. The effect of the incorporation of this modification on the weight and balance of the aircraft is negligible.

References	:	Files R.A.A.F. 9/84/16 and 150/4/8578 A.M. Mod. Vam.942, D.H. Aust. Mod. V117, L.M.C. Meeting No.30
Attachment	:	Drawing No.A.11989 Sheets 1 and 2
Date of Issue	:	26th October, 1953.

DO NOT SCALE

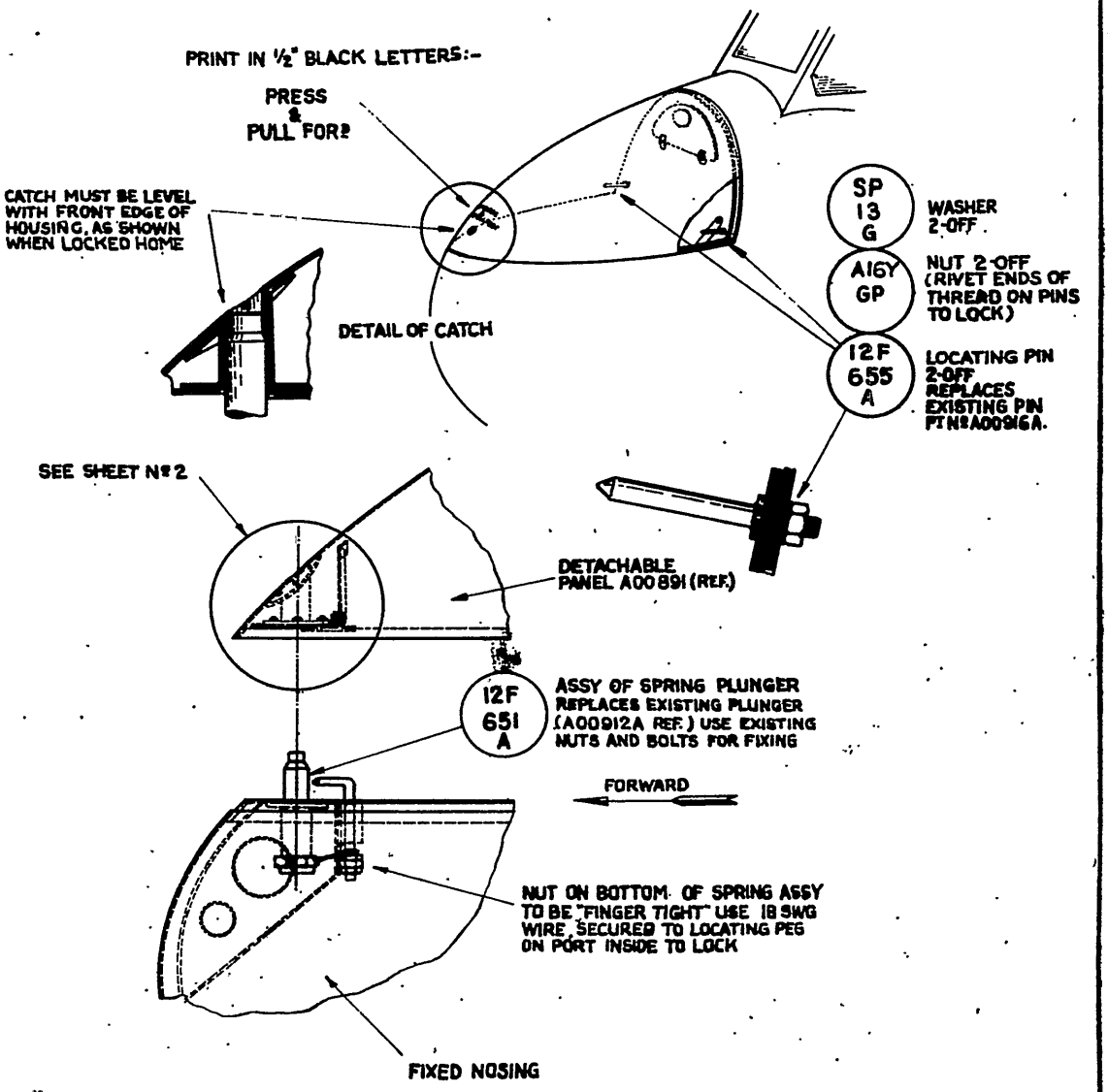

DE HAVILLAND DRG Nº OOM213 (SHEET Nº 1 OF 2 SHEETS)

REFERENCE	ISSUED BY	TITLE
	DIRECTORATE OF TECHNICAL SERVICES R.A.A.F.	IMPROVED CATCH FOR FUSELAGE DETACHABLE NOSE COWL

LIMITS UNLESS STATED		MATERIAL		COMPONENT OF	FUSELAGE
DECIMALS	± .010"	SPEC.		MACHINE	VAMPIRE MK'S 30 & 31
FRACTIONS	± 1/32"	TREATMENT		ENGINE	NENE-2 VH
ANGLES	± ½°	FINISH		TECH. ORDER	VAMPIRE MOD. No. 73
SURFACE FINISH AUSTRALIAN STANDARD ENG. DRWG. PRACTICE A.S.C.2		SCALE		DRAWING NO.	A-11989 SHT. 1. DRWG. A SIZE
		DRAWN	APPROVED		
		TRACED	CHECKED		

DO NOT SCALE

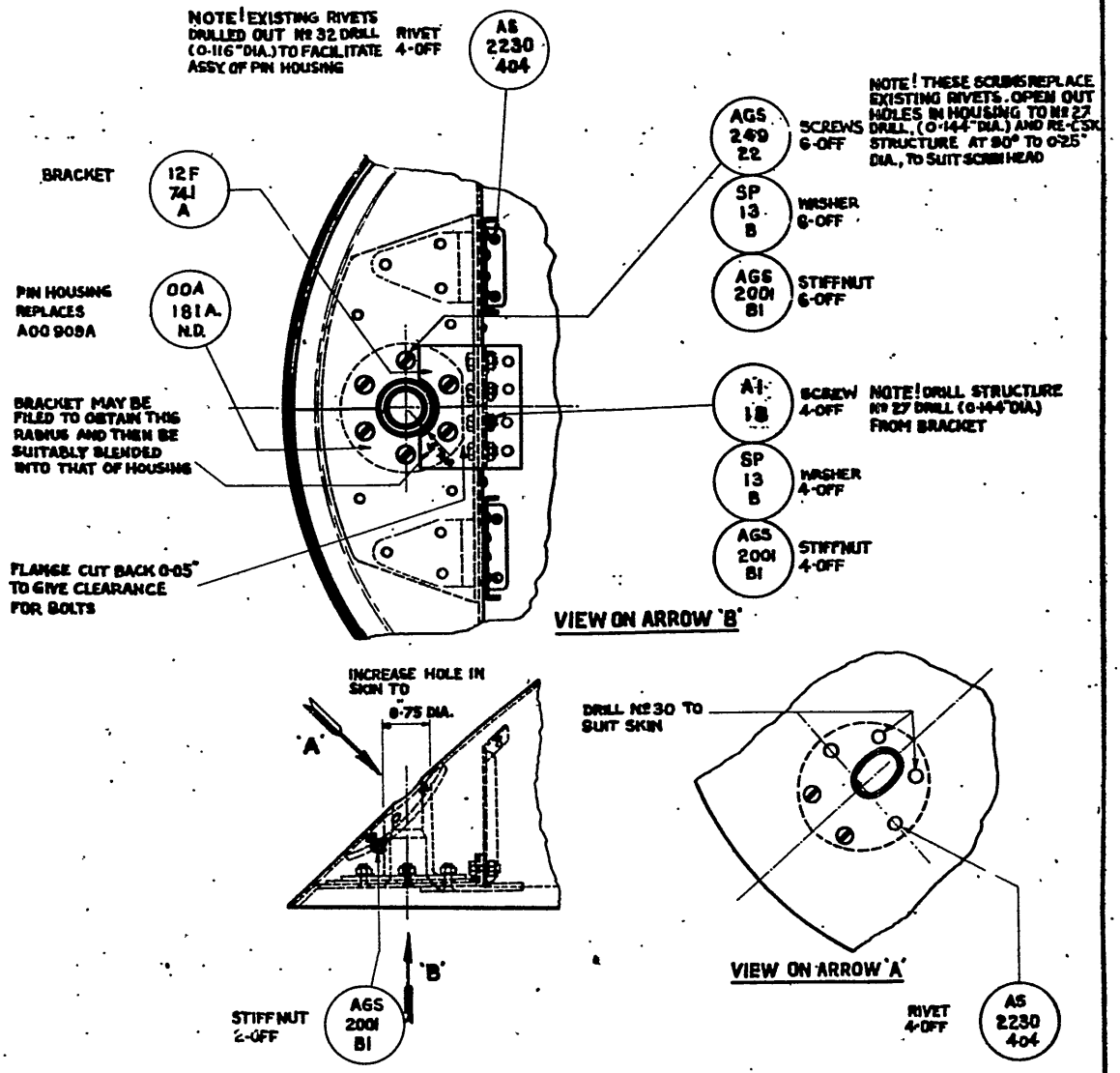

DE HAVILLAND DRG № 00M213 (SHEET № 2 OF 2 SHEETS)

REFERENCE	ISSUED BY	TITLE
	DIRECTORATE OF TECHNICAL SERVICES. R.A.A.F.	IMPROVED CATCH FOR FUSELAGE DETACHABLE NOSE COWL

LIMITS UNLESS STATED		MATERIAL		COMPONENT OF	FUSELAGE
DECIMALS	± .010"	SPEC.		MACHINE	VAMPIRE MKS. 30 + 31
FRACTIONS	± 1/32"	TREATMENT		ENGINE	NENE - 2VH
ANGLES	± ½°	FINISH		TECH. ORDER	VAMPIRE MOD. No. 73
SURFACE FINISH AUSTRALIAN STANDARD ENG. DRWG. PRACTICE A.S.C.21		SCALE		DRAWING NO.	A-11989 SHT. 2
		DRAWN	APPROVED		DRWG. A SIZE
		TRACED	CHECKED		

A.A.P.721:79, Vol.2, Part 2.

VAMPIRE MODIFICATION NO. 74
(ISSUE NO. 2)

Application : Mark 30 and 31 aircraft (para. 2)

Classification: Class 2.

MACHMETER - RE-INTRODUCTION

Introduction

1. This modification re-introduces the machmeter, as the mach-indication on the safehand airspeed is considered insufficient.

General

2. The modification is to be incorporated on all Vampire Mk.30 and 31 aircraft not already incorporated with the equivalent approved manufacturer's modification, D.H. (Aust.) Modification V.148.

(a) This modification is to be incorporated as follows:-

(i) Aircraft in use : Not later than next weekly inspection after receipt of modification kits.

(ii) Aircraft undergoing repair and inspection : During such repair or inspection.

(b) No special tools are required.

(c) Man-hours : Approximately six (6) man-hours per aircraft.

(d) The trade mustering responsible for fitment is instrument fitter.

Supply

3. The following parts are required to complete one modification set:-

Item No.	Ident. No.	Part No.	Nomenclature	No. Off per A/c	Stores Class
1	G6A/2194-220		Machmeter Mk. $1A^{X}$ Lum.	1	A
2		00B25	Plate Adapter Machmeter	1	C
3	H28/9498(Z)	AS1882/7C	Bolt 2BA x 1.1" long 90° csk. M.S.	4	C
	or H28/8311	or AS1242/7C	Bolt 2BA x 1.1" long 90° Csk. H.T.S.	or 4	C

Item No.	Ident. No.	Part No.	Nomenclature	No. Off per A/c	Stores Class
4	H28/10288	C.P.1	Nut stiff. 2BA Hex. M.S.	4	C
5	T32C/500106	00B51ND	Packing 1/8" thick rubber Durometer 30-40.	4 off 1" x 0.4"	C
6	H128F/59794	1210	Washer shakeproof	4	C
7	T32C/143	Q002229 N.D.	Tubing 5/16" I/D x 7/16" O/D long D.T.D. 373.	2 off 18" long	C
8	I1/1445	Q00897 N.D.	Braided rubber tubing 5/16" O/D. 22 SWG. light alloy.	2 off 1½" long	C

Notes: (a) Item 1 is to be supplied by E.L.D.A.P. to Sub-modification section No.2 A.D., Richmond.

(b) Items 2 to 8 inclusive are to be manufactured by De Havilland Aircraft Pty. Ltd. and delivered to Sub-modification section No. 2 A.D., who is to assemble all items to form a modification set.

(c) Units are to demand on Sub-modification section, No. 2 A.D. for their requirements.

Salvage

4. The following parts are rendered redundant by the incorporation of this modification:-

Item No.	Ident. No.	Part No.	Nomenclature	No. Off per A/c	Stores Class
9		00B31	Plate blanking	1	C
10	H28/10287	AGS2001/B/1	Nut stiff. 4BA Hex. M.S.	4	C
11		00Q11ND	Piece Alum. bar 5/16" dia. x .75" long.	2	C

Notes: (a) Items 9 and 11 are to be disposed of in accordance with current authorised procedure.

(b) Item 10 is to be examined and returned to store if serviceable.

Method of Incorporation

5. This modification is to be incorporated in the following sequence of operations:-

Method of Incorporation (Cont'd)

(a) Remove the detachable nose panel and open the door in the front armour to gain access to the back of the instrument panel.

(b) Locate the blanking plate at top corner of the L.H. instrument panel. Undo the four screws and remove the blanking plate and the four nuts from the aircraft, items 9 and 10. Retain the four screws.

(c) Now attach the machmeter, item 1, to the adapter plate, item 2, using the four new bolts, item 3, the four nuts, item 4, and the four rubber packings, item 5, which are to be fitted between the adapter plate and the machmeter.

(d) Attach the adapter plate complete with the machmeter to the instrument panel using the four screws retained in operation (b), picking up on the existing holes in the panel. Fit a shakeproof washer, item 6, under the head of each bolt.

(e) With the machmeter thus received locate the two tee unions, just forward and below the blind flying panel, which are blanked off at their upper outlet.

(f) Remove the two aluminium bar pieces, item 11, blanking off the outlets and replace with the two pieces of light alloy tubing, item 8, connect up the two new tubes, item 7, between the machmeter and the tee pieces. The static line is connected to the lower machmeter inlet and the pressure line to the upper machmeter inlet. Secure both ends of the tubing using copper locking wire 22 S.W.G.

(g) Check for leaks in accordance with current authorised procedure. Refer Australian Air Publication 828, Section 4, Chapter 3, paragraph 137.

(h) Close door in front armour and replace the detachable nose panel.

(j) Record the modification in the Air Frame Log Book.

Drawings

6. No drawings are required.

Effect on Weight and Balance

7. The effect of the incorporation of this modification on the weight and balance of the aircraft is negligible.

8. This modification cancels and supersedes Vampire Modifications No. 74 dated 16th September, 1953 and 6th January, 1954.

References	:	Files R.A.A.F. 9/84/203 and 150/4/8588 D.H. Aust. I.L.238 D.H. Aust. Mod. V148. L.M.C. Meeting Nos. 29 and 43.
Category	:	B.
Date of Issue	:	9th June, 1954.

ACCELEROMETER - INTRODUCTION

Reason for and Description of Modification

1. Cases have occurred, where ripples have been formed in the skin covering of the aircraft. This may be due to overstress under high G Loading. The accelerometer is introduced to give the pilot warning of the loads being applied.

Application

2. This work is to be carried out on Mk.33 aircraft, Serial No. A79-801 to A79-818 inclusive.
Aircraft D.H. Serial No. 4099 and subsequent will be modified by the manufacturer to make provision for fitment of this accelerometer and will also fit it when it is available.

Responsibility for Incorporation

3. The modification will be incorporated by units holding these aircraft.

Action in Respect of Spares

4. Not applicable.

Orders Superseded or Cancelled

5. No orders are superseded or cancelled by this modification.

Equivalent Modification

6. De Havilland (Aust.) Modification V.643 is the manufacturer's equivalent modification for making provision for fitment of the accelerometer.

Supply

7. The following parts are required to complete one modification set:-

Item No.	Ident. No.	Part No.	Nomenclature	No. Off per A/c	Stores Class
1.	G6A/3451	3419-5A-A1	Accelerometer, Bendix Type B6	1	A
2.	H28C/2145	A45-B28	Screw, c's'k hd., brass, 4 BA, 7/8" long	3	C
			or		

Supply (Cont'd)

Item No.	Ident. No.	Part No.	Nomenclature	No. Off per A/c.	Stores Class
	H28C/2151	AGS.248/26	Screw, c's'k hd., brass 4 BA, 1" long	3	C
3.	H28C/12305	SP.13B	Washer, M.S. 4 BA.	3	C
4.	H28/13755	AS.1244/4B	Bolt, raised 90° c's'k hd, H.T.S., 4 BA, .75" long	4	C
			or		
	H28/27070	AS.1244/5B	Bolt, raised 90° c's'k hd, H.T.S., 4 BA, .85" long	4	C

Note: Item 1 is to be supplied on period loan from the Department of Defence Production who issue the item to the De Havilland Aircraft Factory and the Sub-modification Centre at No.2 Aircraft Depot. The Sub-modification Centre is to make up the items into modification kits, which are to be issued to units on demand.

Disposal of Parts Removed

8. The following parts are rendered redundant by the incorporation of this modification:-

Item No.	Ident. No.	Part No.	Nomenclature	No. Off per A/c	Stores Class
5	-	15.F.871	Plate, Blanking	1	C
6	H28C/2127	A45-B16	Screw, c's'k. hd., brass, 4 BA, ½" long	4	C

Note: Items 5 and 6 are of little value and are to be disposed of by current authorised procedure.

Disposal of Parts in Stock.

9. No action required.

When the Modification is to be Incorporated

10. The modification is to be incorporated not later than the next minor inspection.

Method of Incorporation

11. (a) Man-hours involved : Approximately three (3) man-hours are required to incorporate this modification.

Method of Incorporation (Cont'd)

(b) Special Tools, Jigs, &c. : No special tools are required.

(c) Sequence of Operations :

(i) Remove existing instrument, clock, from position near left centre of instrument panel and rework lower left hole as shown on accompanying drawing G-12134.

(ii) At port side of instrument panel, remove blanking plate (item 5) which is attached to panel by four brass screws (item 6). Discard blanking plate and screws but retain stiff nuts.

(iii) Fit clock in this new position and secure by four raised c'sk head bolts (item 4).

Note: If raised c'sk head bolts with .40" plain length are not available, bolts H28/27070 may be used by running down the thread to give .40" plain length.

(iv) After tightening, file flat the raised portion of the bolt head so as to completely remove the slot and file the ends of the bolts so that they do not protrude through the stop nuts on the clock. The bolt heads after filing are to be painted black.

Note: Care is to be taken during filing not to scratch the face of the panel.

(v) Now fit accelerometer in the position shown on drawing G.12134 and secure by means of three screws, washers (items 2 and 3) and three nuts retained in operation (ii).

(d) Tests : Modification is to be flight tested after installation.

(e) Recording : Record the Accelerometer G6A/3451 in the Aircraft Schedule.

Drawings

12. Drawing No. G-12134 is attached.

Effect on Weight and Balance

13. The effect of the incorporation of this modification on the weight and balance of the aircraft is negligible.

References : Files R.A.A.F. 150/4/8487, 9/84/203 Part 11 and 150/4/8587. De Havilland I.L. 261. D.H. Mod. V643.

Attachment : Drawing G.12134.

Date of Issue : 28th April, 1954.

DO NOT SCALE

ISSUE NO	DATE	ALTERATION	INITIALS
2.	15.4.54	Ref. No. for Accelerometer Bendix Type 3419-5A-1 altered as shown.	

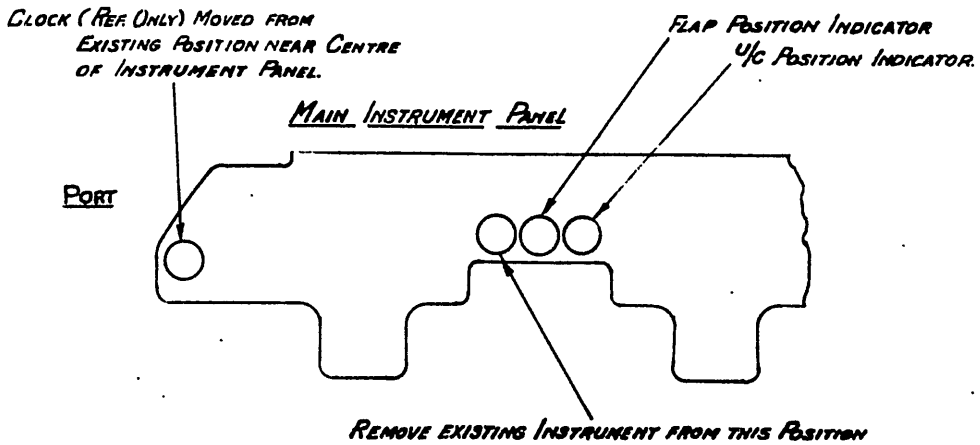

1 off (2)	G6A 3451	Accelerometer Bendix Type 3419-5A-1
AS 1244 4B.	A4S B2B	Screws 3-off
Bolt 4-off	SP 13B	Washers 3-off
	AGS 2001-B1.	Stiffnuts 3-off

To Attach Clock in New Position

1. Remove Existing Blanking Plate
2. Fit Clock and Secure with
3. After Tightening File Flat the Raised Portion of the Bolt Head so that the Slot is completely Removed.
4. File the Ends of the Bolts so that they Do Not Protrude through the Stop-Nuts on the Clock
5. After Filing, the Screw Heads are to be Painted Black.

Note: During Filing, Care Must be Taken Not to Scratch the Face of the Panel.

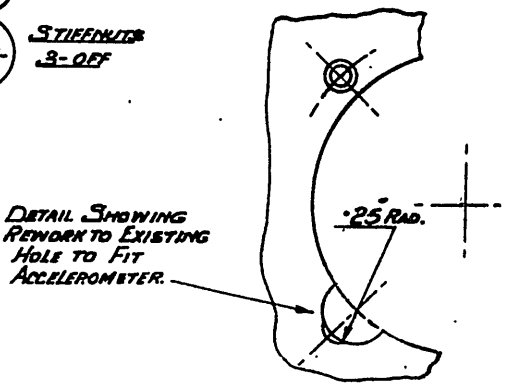

DE HAVILLAND DRG. Nº OOM 861.

REFERENCE	ISSUED BY	TITLE
	DIRECTORATE OF TECHNICAL SERVICES R.A.A.F.	Accelerometer- To make provision for fitment.

LIMITS UNLESS STATED		MATERIAL		COMPONENT OF	
DECIMALS	± .010"	SPEC.		MACHINE	
FRACTIONS	± 1/32"	TREATMENT		ENGINE	
ANGLES	± 1°	FINISH		TECH. ORDER	VAMPIRE MOD. Nº 75
SURFACE FINISH AUSTRALIAN STANDARD PRACTICE A.S.E.2		SCALE		DRAWING NO.	G-12134 A
		DRAWN	APPROVED F.P.		
		TRACED	CHECKED		

Air Force Head-Quarters

Technical Order

VAMPIRE MODIFICATION NO.76

Application: Mk.30 and 31

Classification: Class 2

SPERRY MK.3 TYPE H.L.5, ARTIFICIAL HORIZON - INTRODUCTION

Introduction

1. Because of loss of efficiency with increased flying altitude, the air driven artificial horizon as fitted to Vampire Aircraft is unsatisfactory.

2. This order introduces an electrically driven artificial horizon which is designed to give improved performance in modern high speed, high altitude aircraft.

3. The modification can only proceed on aircraft which have Vampire Modification No.62 incorporated (equivalent De Havilland (Aust.) Modification V.102, G3F compass installation). It ~~must be carried out~~ concurrently with that modification. ~~V.102 has been incorporated by the~~ ion V.102 was incorporated by No.4051 to 4080 inclusive" ~~No.4001 and 4050 inclusive.~~ 6, insert "Draft D.H. Serial — AL

General

4. This modification is to be incorporated as follows:-

(a) Aircraft in use : Aircraft which have Vampire Modification No.62 incorporated:- Fitment to be carried out by Units holding aircraft.

Aircraft which have not Vampire Modification No.62 incorporated:- Fitment to be arranged by Headquarters Maintenance Command in conjunction with the incorporation of Vampire Modification No.62 (Installation of G3F Compass).

(b) Aircraft undergoing repair or reconditioning. : To be incorporated in conjunction with Vampire Modification No.62 before release of aircraft.

(c) No special tools will be required.

(d) Man-hours : Approximately sixteen (16) man-hours per aircraft.

(e) The trade mustering responsibility for the incorporation of this modification is air frame fitter and instrument fitter.

Supply

5. The following parts are required to complete one modification set:-

Item No.	Ident. No.	Part No.	Nomenclature	No. Off Per Set	Stores Class.
1	G6A/2717-020	16037/0	Horizon, Artificial, Mk.3	1	A
2		OON543	Bracket, cable junction	1	
3	G6A/500146	OON545A	Cable Assy. Horizon Supply	1	A
4	H28C/2664	AGS253/39	Woodscrew, No.6 x ¾" long M.S. RD.HD.	2	C
5	I1/9163		Gauze, phosphor bronze 41G x 100 mesh Commercial	1	C
6	I1/20 or I1/9282		Sheet, brass, 18 SWG.BSS266 or	AR	C
			Sheet, brass, 18 SWG. Commercial	AR	C
7	K4/10958		Plastic hermatite or approved sealing compound	AR	C

Note: (a) Items 1 to 5 are to be delivered to Sub-modification Section 2A.D. Richmond, which will issue on demand (item 1 ex D.A.P. items 2 to 5 ex De Havilland Aircraft Pty. Ltd.).

(b) Items 6 and 7 are to be drawn from unit stores.

Salvage

6. The following items are rendered redundant by the incorporation of this modification.

Item No.	Ident. No.	Part No.	Nomenclature	No. Off Per Set	Stores Class
8	G6A/3182		Horizon, artificial, suction driven.	1	A
9	G6A/1015	G10184/19	Pipe, Suction	1	A
10	G6P/503684	A10821/15	Body, Union	1	C
11	G6P/503685	A10821/16	Nut, Union	1	C
12	G6P/502138	A10821/17	Olive	1	C

Note: Items Nos.8 to 12 inclusive are to be returned to Stores Stock.

Method of Incorporation

7. Disconnect and move the blind flying panel sufficiently to gain access to its reverse face in accordance with current authorised procedure.

8. Locate the suction driven artificial horizon and disconnect the suction pipe leading from the horizon to the 3-way suction box at both ends. Discard the pipe (item 9), the union body (item 10), the union nut (item 11) and the olive (item 12). Retain the nut with which the pipe was attached to the suction box, but remove and discard the rubber ring which is located underneath the nut in the junction box hole to clamp the pipe when compressed by the nut.

9. Rework the retained nut as follows:-
(Refer dwg. A12007)

(a) Cut out an 18 SWG brass blanking disc to specification B.S.S.266 or commercial to suit the threaded end of the nut (item 6). Solder the blanking plate to the nut and drill a 9/64 inch hole through the centre of this plate.

(b) Shape a piece of phosphor bronze gauge 41G x 100 mesh (item 5) to suit the hole at the hexagon end of the nut. Solder the gauge to the nut.

(c) Apply a coat of Plastic Hermatite or any other approved sealing compound to the thread of the nut.

10. Then assemble the reworked nut in its original position.

11. Remove the artificial horizon (item 8) from the blind flying panel.

12. Fit the new Mk.3 Horizon (item 1) in lieu.

13. Alter the Part Number of the blind flying panel 00B37AND to read 00B55AND and replace the panel.

14. Fit the bracket (item 2) to the wooden member supporting the rudder pedal structure at the starboard side with its rear face at a distance 4.25 inch from the front armour plate using two woodscrews (item 4). (Refer drawing A12007).

15. Attach the socket end of the new cable (item 3) to the bracket by means of the coupling nut supplied with the cable.

16. Connect the cable supplied with the gyro horizon to the socket.

17. Whip the fuselage cable (see paragraph 15) to the existing cable run behind J.B.1 and connect the other end of the cable to the G3F Junction Box located on bulkhead No.2 as shown in the drawing.

18. Check the new electric gyro horizon for correct functioning. Test the vacuum system as detailed in Australian Air Publication 828, Section 4, paragraph 136.

Recording

19. Record the modification in the Airframe Log Book.

Drawings

20. Drawing A12007 is attached.

Effect on Weight and Balance

21. Amendments to Weight Sheet Summaries will be incorporated and issued by Air Force Head-Quarters.

22. The effect of this modification on the weight and balance of the aircraft is as follows:-

Item	Weight Lb. (±)	Arm In. (±)	Moment Lb.In. (±)
REMOVED			
Horizon Artificial (suction driven)	- 3.75	- 90.0	+ 338
INSTALLED			
Horizon Sperry Mk.3 (type HL5)	+ 5.25	- 90.0	- 473

References : Files R.A.A.F. 9/84/203 and 150/4/8589
D.H. Aust. IL 221
D.H. Aust. Mod. V159

Attachment : Drawing A12007

Date of Issue : 30th March, 1954.

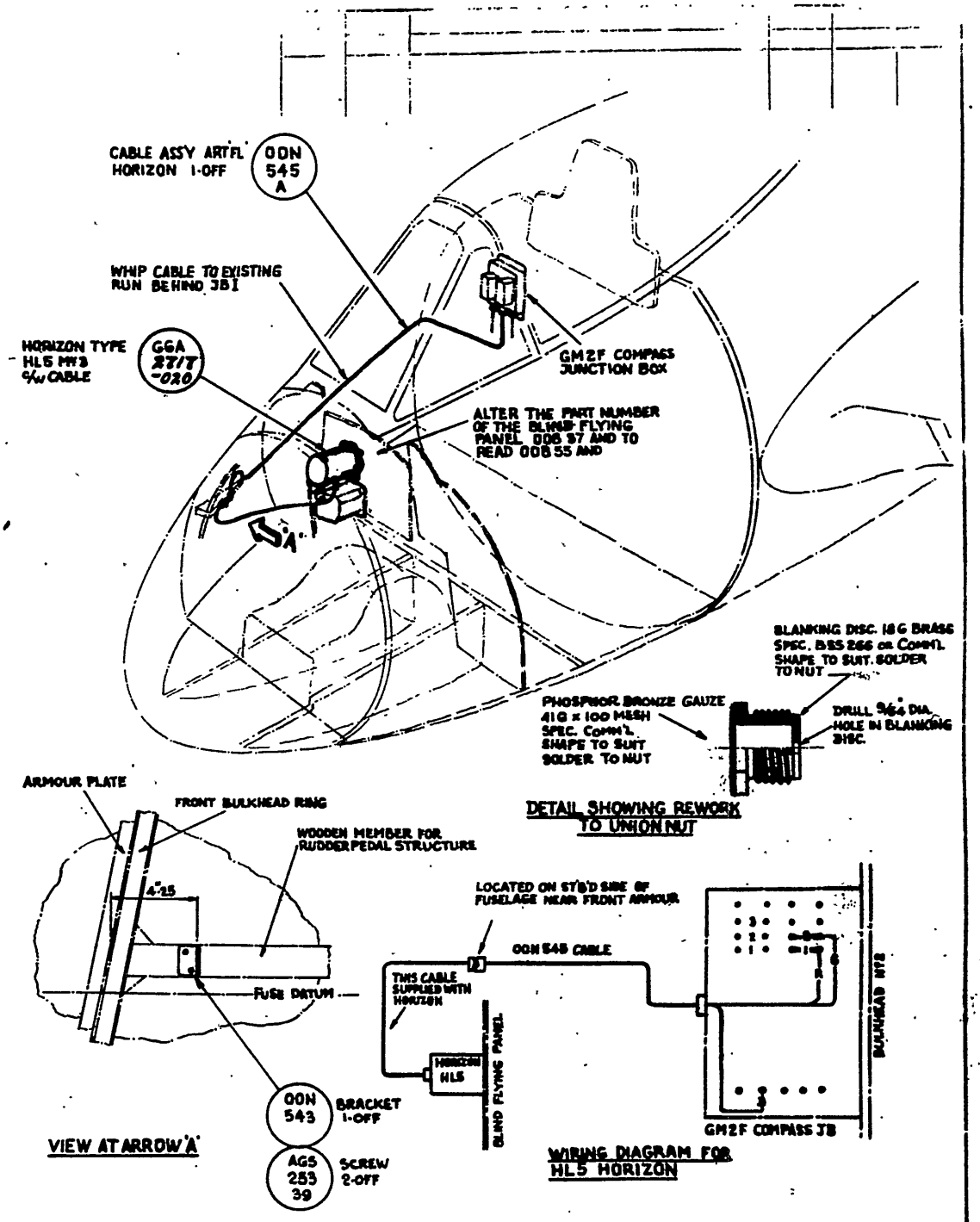

DE HAVILLAND DRG. No OOM 221 SHEET 1 OF SHEETS 1

REFERENCE	ISSUED BY	TITLE
	DIRECTORATE OF TECHNICAL SERVICES R.A.A.F.	SPERRY Mk 3 TYPE H.L.5 GYRO-HORIZON -INTRODUCTION-

LIMITS UNLESS STATED		MATERIAL		COMPONENT OF	
DECIMALS	±.010"	SPEC.		MACHINE	
FRACTIONS	± 1/32"	TREATMENT		ENGINE	
ANGLES	± ½°	FINISH		TECH. ORDER	VAMPIRE MOD 76
SURFACE FINISH		SCALE			
AUSTRALIAN STANDARD		DRAWN	APPROVED	DRAWING No	A12007
ENG. DRWG. PRACTICE AS2		TRACED	CHECKED		DRWG. A SIZE

Air Force Head-Quarters

Technical Order

VAMPIRE MODIFICATION NO. 77

Application: Mk. 33

Classification: Class 2

REINFORCED RUBBER ELBOW ON FUEL TANK VENT LINE - INTRODUCTION

Introduction

1. Cases of splitting have occurred to the existing rubber elbows on the fuel tank vent line in the engine bay.

In order to overcome this defect this modification authorises the introduction of an improved type of rubber elbow.

General

2. (a) This modification is applicable to all Mark 33 trainer aircraft.

(b) Aircraft in use : At next weekly inspection after availability of part.

(c) Aircraft undergoing repair or inspection : During such repair or inspection.

(d) No special tools will be required.

(e) Man-hours : Approximately $\frac{1}{4}$ man-hour per aircraft.

(f) The trade mustering responsibility for the incorporation of this modification is airframe fitter.

Supply

3. The following part will be required to complete one modification set:-

Item No.	Ident. No.	Part No.	Nomenclature	No. Off Per A/C	Stores Class.
1	A79/503435	DM.1007	Elbow, rubber fuel vent.	2	

NOTE: Item 1 will be supplied from Sub-Modification Section No. 2 Aircraft Depot who will issue this item on demand.

Salvage

4. The following part will be rendered redundant by the incorporation of this modification:-

Item No.	Ident. No.	Part No.	Nomenclature	No. Off Per A/C	Stores Class.
2	A79/503123	P.00108	Elbow, rubber tank fuel vents	2	

NOTE: Item 2 is obsolete and is to be disposed of in accordance with the current authorised procedure.

Method of Incorporation

5. This modification is incorporated in the following sequence of operations:-

(a) Remove the upper engine cowl and locate the fuel tank vent pipe and elbow (item 2) at the upper forward portion of the engine bay on both port and starboard sides.

(b) Remove the existing neoprene rubber elbow (item 2) from the vent lines and replace with the improved type of neoprene rubber elbow (item 1).

NOTE: If serviceable, the hose clips can be re-used.

(c) Record the modification in the Airframe Log Book.

Drawing

6. No drawings are required.

Effect on Weight and Balance

7. The effect of the incorporation of this modification on the weight and balance of the aircraft is negligible.

References : Files R.A.A.F. 9/84/459 and 150/4/8594

Date of Issue : 9th October, 1953.

NOSEWHEEL JACK ATTACHMENT BOLTS - IMPROVED ACCESS

Introduction

1. (a) This modification authorises the introduction of

(i) an access hole in the L.H. nosewheel housing side beam, and

(ii) an access hole in the two radius rod locking plates, to enable the two nosewheel jack attachment bolts to be withdrawn.

(b) This modification has been written in two parts viz:-

Part 'A' - Modification of L.H. nosewheel housing sidebeams.

Part 'B' - Modification of locking plates.

(c) It is advisable to incorporate Vampire Modification No. 63 - "Tab Washer on Nosewheel Jack" - in conjunction with this modification on Vampire aircraft Mk.33, A79-801 and A79-802.

General

2. (a) This modification is applicable to Vampire Aircraft Mk.33 not incorporating the approved equivalent modification De Havilland (Aust.) modification V628.

Part "A" of this modification is to be incorporated on aircraft No. A79-801 to A79-808 inclusive.

Part "B" of this modification is to be incorporated on aircraft No. A79-801 and A79-802.

Aircraft A79-809 and subsequent will be modified by the manufacturer.

Aircraft A79-803 to A79-808 inclusive will be modified in accordance with Part "B" only by the manufacturer.

Notes: (i) It will be found on aircraft A79-803 to A79-808 inclusive, although the access holes in the locking plates are embodied, the rear jack attachment bolt still is assembled with its head facing outboard. To enable the bolt to be withdrawn, the bolt is to be reversed.

(ii) The numbers on Vampire Mk.33 aircraft are in the sequence received from the manufacturer, i.e., A79-801, A79-802, A79-803, &c.

(b) This modification is to be incorporated as follows:-

(i) Aircraft in use : Not later than the next minor inspection after receipt of modification sets.

(ii) Aircraft undergoing repair or inspection : During such repair or inspection.

(c) No special tools will be required.

(d) Man-Hours : For Part 'A', approximately eighteen man-hours per aircraft.

For Part 'B', approximately twenty-four man-hours per aircraft.

(e) The trade mustering responsibility for the incorporation of this modification is airframe fitter.

Part 'A' - Modification of L.H. Nosewheel Housing Sidebeam

Supply

3. The following parts will be required for Part 'A' to complete one modification set:-

Item No.	Ident. No.	Part No.	Nomenclature	No. Off Per A/C	Stores Class.
1	I1/9641		Alclad, 16 SWG, to spec. DTD.610	AR.	C
2	I1/2569		Alclad, 14 SWG, to spec. DTD.390	AR.	C
3	K3/353		Compound, Jointing to spec. DTD.369A	AR.	C
4	H128F/30282	AS2227/507	Rivet, 5/32" dia. x 7/16" long, sn.hd., alum. alloy	17	C

Note: Items 1 to 4 inclusive are to be drawn from unit stores.

Salvage

4. The following parts will be rendered redundant by the incorporation of Part 'A' of this modification:-

Item No.	Ident. No.	Part No.	Nomenclature	No. Off Per A/C	Stores Class.
5	H128F/ 30281	AS2227/ 506	Rivet, 5/32" dia. x $\frac{3}{8}$" long, sn.hd, alum. alloy	7	C

Note: Item 5 is to be disposed of in accordance with current authorised procedure.

Method of Incorporation (Part 'A')

5. The following sequence of operations is the method for incorporating modification Part 'A':-

(a) Trestle the aircraft and remove the detachable L.H. cannon spout fairing to gain access to the outboard face of the L.H. nose wheel housing side beam.

(b) Refer drawing A12008, sheet 1. Unscrew and retain the six 2 B.A. nuts, bolts, and washers (two on the vertical face and four on the horizontal face), which will be seen to be in the way of the new doubler plate. Also, temporarily, remove the drain pipe clip together with its attaching parts.

(c) Using a $\frac{1}{8}$ inch diameter drill, drill out the 7 5/32 inch diameter rivets which are also positioned in the doubler plate (item 5).

(d) Refer drawing A12008, sheet 2. Mark out and shape the doubler plate as shown thereon, using 16 SWG Alclad, DTD.610. (item 1).

(e) Position the doubler plate and with a No.11 drill, spot through from the two B.A. holes in the vertical face of the top boom. Temporarily fasten the doubler plate to the top boom.

(f) Proceed to pick up each of the existing rivet holes in the top and bottom boom, with the exception of that in the way of the cut out, by drilling from within the nosewheel housing, using a No.21 drill. Also spot through the drain pipe clip attachment hole using a No.26 drill.

(g) Using the doubler as a template, scribe the position of the cut-out on the top boom. Also mark off the profile of the doubler on the side beam web.

(h) Remove the doubler from the sidebeam and deburr all holes.

(i) Again using a No.21 drill, drill out a series of holes within the area of the cut-out and then using a half round file, file the cut-out to the correct shape.

(j) Refer drawing A12008, sheet 1, mark out and shape the new packing plate from 14 SWG Alclad DTD.390 (item 2). Remove sharp edges.

Note: It is suggested that a sheet of cardboard should first be cut to the correct shape and used as a template.

(k) With the packing plate in position, temporarily re-attach the doubler plate. From within the nose, spot through the four holes in the horizontal flange of the top boom.

(l) Mark off in accordance with the dimensions on drawing A12008, sheet 2 and drill eight No.21 holes through the doubler, the packing plate and the web and three No.21 holes through the doubler, the top boom and the web.

(m) Again remove the doubler and packing plate. Deburr all holes and treat the mating surfaces with seaming compound (item 3).

(n) Secure the doubler and packing plate using seventeen rivets (item 4) and the original bolts, nuts and washers. Replace the drain pipe clip. Alter the Part No. of the L.H. nose-wheel housing sidebeam 15.FS.667A to read 15.FS.667A/1.

(o) Partly retract the nosewheel and check, whether the forward jack attachment bolt, lines up correctly with the new hole. Finish to match existing colour scheme.

(p) If Part 'B' of this modification has been incorporated previously on the particular aircraft, record the modification in the Air Frame Log Book. If not, carry out Part 'B' of this modification.

Part 'B' - Modification of Locking Plates

Supply

6. The following parts will be required for Part 'B' to complete one modification set :-

Item No.	Ident. No.	Part No.	Nomenclature	No. Off Per A/C	Stores Class.
6	H28B/5032	SP9/C8	Pin, split, 1/16" dia. x 1" long	4	C
7	H28B/30536	DHS94/8/195	Pin, ground steel ¼" dia. x 1.95 long	1	C
8	H128F/62139	AS455/511	Rivet, 5/32" dia. x 11/16" long, sn.hd, M.S.	2	C

Note: Items 6 to 8 inclusive are to be drawn from unit stores.

Salvage

7. The following parts will be rendered redundant by the incorporation of this modification:-

Item No.	Ident. No.	Part No.	Nomenclature	No. Off Per A/C	Stores Class.
9	H28B/5032	SP9/08	Pin, split, 1/16" dia. x 1" long	4	C
10	H28B/30536	DHS94/8/195	Pin, ground steel $\frac{1}{4}$" dia. x 1.95 long	1	C
11		AS455/512	Rivet, 5/32" dia. x $\frac{3}{4}$" long, sn.hd., M.S.	2	C

Note: Items 9 to 11 inclusive are to be disposed of in accordance with current authorised procedure.

Method of Incorporation (Part 'B')

8. The following sequence of operations is the method for incorporating modification Part 'B':-

(a) Release the hydraulic accumulator pressure.

(b) Refer drawing A12008 sheet 1, and temporarily remove the bolt, nut, &c., which fasten the radius rod support link and the radius rod link to the radius rod.

(c) Undo and retain the bolts, &c., securing the radius rod socket plates to the nosewheel housing sidebeams.

(d) Lower the radius rod carefully and disconnect the rear jack attachment bolt. Retain the bolt and nut but discard the split pin (item 9).

(e) Using a 7/32 inch diameter drill, drill out the left hand ground steel pin (item 10) that secures the socket plate to the bearing tube. Slide the socket plate from the bearing tube.

(f) Locate the roller at the lower end of the locking plates. Unscrew and retain the special bolt and nut. Carefully remove the spring from its two positioning lugs.

(g) Drill out the two 5/32 inch diameter steel rivets (item 11), helping to secure the jack pick-up to the locking plates. Also unscrew and retain the five cheese head bolts.

(h) The jack pick-up is now free to be modified as shown on the drawing.

(i) Temporarily re-attach the jack pick-up to the locking plates and scribe the profile of the cut-out on both lock plates.

(j) Dismantle the assembly again, continue the arc to form a complete circle and cut-out the marked portions on each of the lock plates. Remove the sharp edges.

(k) Alter the Part No. of the jack pick-up 13.UN.41A to read 13.UN.163. Alter the Part No. of the lock plates G00186A (2 off) to read 13.UN.165A (R.H.) and 13.UN.166A (L.H.).

(l) Firmly re-attach the jack pick-up to the lock plates using the five bolts retained in paragraph 8(g) and two new rivets (item 8).

(m) Check whether the rear jack attachment bolt can be withdrawn through the new holes.

(n) Refer drawing A12008, sheet 1, and slide the modified lock-plate assembly into its original position. Replace the L.H. socket plate using a new ground steel pin (item 7).

(o) Reassemble the original roller components and the spring retained in paragraph 8(f). Adjust the mechanism as detailed on drawing A12008 sheet 1.

(p) Replace the radius rod assembly using the attaching parts retained in paragraph 8(c).

(q) Assemble the radius rod link and the radius rod support link to the radius rod with the original bolt and nut and a new split pin (item 6).

(r) Secure the hydraulic jack to the modified jack pick-up assembling the attachment bolt with its head facing inboard.

(s) Inflate the hydraulic accumulator. Retract the undercarriage and make adjustments where necessary. Remove the trestles.

(t) Record the modification in the Airframe Log Book.

Drawing

9. Drawing A12008, Sheets 1 and 2 is attached herewith.

Effect on Weight and Balance

10. The effect of the incorporation of this modification on the weight and balance of the aircraft is negligible.

References : Files R.A.A.F. 9/84/91 and 150/4/8595
D.H.Aust. Mod. V.628
A.M. Mod. VAM.3149

Attachments : Drawing A12008 Sheets 1 and 2.

Date of Issue : 9th October, 1953.

DO NOT SCALE

ISSUE Nº	DATE	ALTERATION	D.I.L.	INITIALS APPROVED

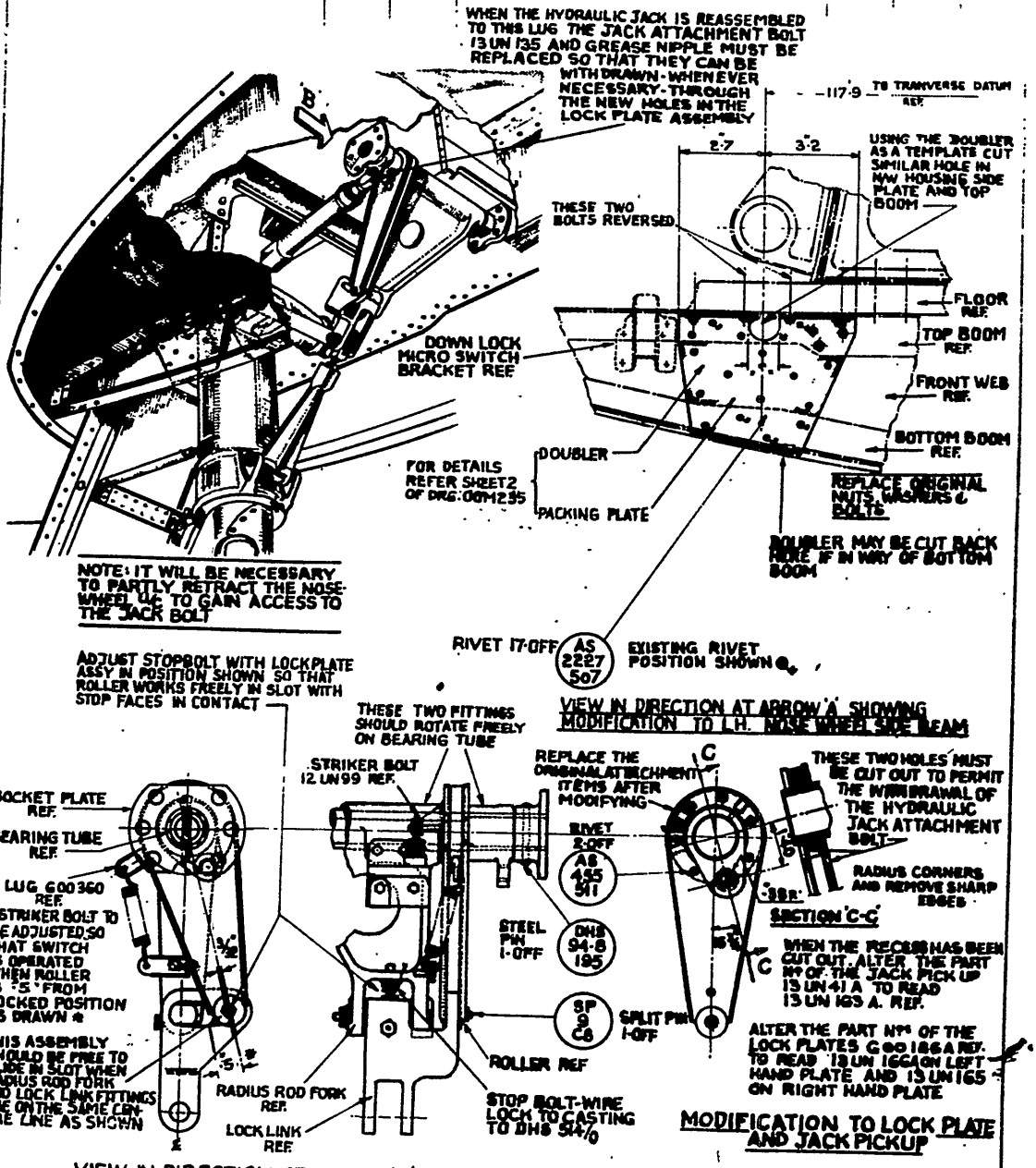

DE HAVILLAND DRG Nº 00M 235 SHEET 1 Nº OF SHEETS 2

REFERENCE	ISSUED BY	TITLE
	DIRECTORATE OF TECHNICAL SERVICES R.A.A.F.	NOSEWHEEL JACK ATTACHMENT BOLTS - IMPROVED ACCESS -

LIMITS UNLESS STATED		MATERIAL		COMPONENT OF	UNDERCARRIAGE
DECIMALS	±.010"	SPEC.		MACHINE	VAMPIRE MK 33.
FRACTIONS	± 1/32"	TREATMENT		ENGINE	GOBLIN
ANGLES	± 1/2°	FINISH		TECH. ORDER	VAMPIRE MOD Nº 78
SURFACE FINISH		SCALE			
AUSTRALIAN STANDARD ENG. DRWG. PRACTICE AS 22		DRAWN	APPROVED	DRAWING Nº	A 12008 SHT. 1. DRWG. A SIZE
		TRACED	CHECKED		

DO NOT SCALE

+ DENOTES : EXISTING RIVETS AND BOLTS

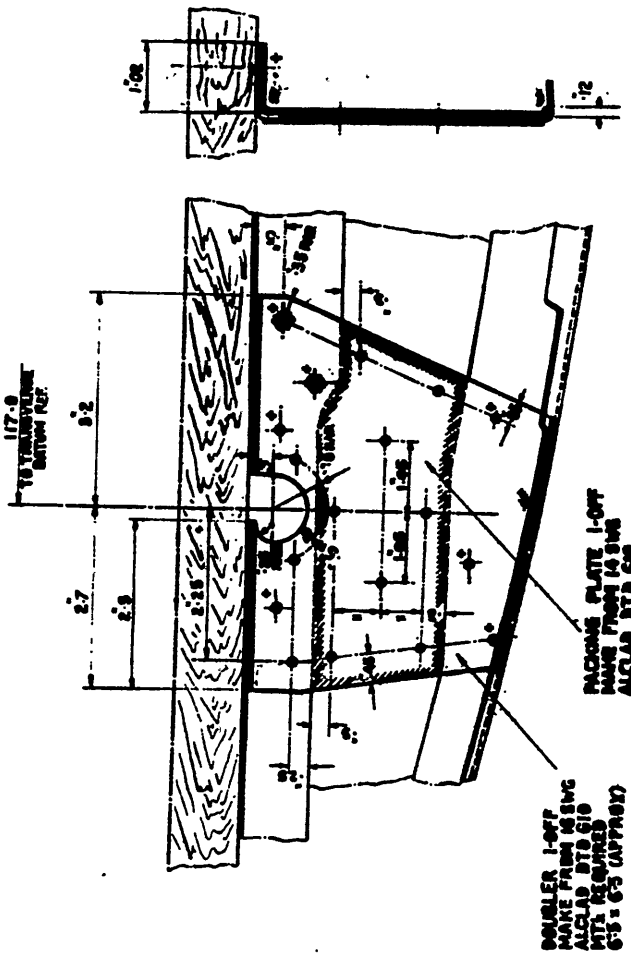

DETAILS OF MODIFICATION TO L.H. NOSEWHEEL SIDE BEAM
(REFER ALSO TO SHEET 1 OF DRAWING 235)

DE HAVILLAND DRG. Nº 00M 235 SHEET 2 OF 2 SHEETS

REFERENCE	ISSUED : DIRECTORATE OF TECHNICAL SERVICES R.A.A.F.	TITLE : NOSEWHEEL JACK ATTACHMENT BOLTS - IMPROVED ACCESS -
LIMITS UNLESS STATED	MATERIAL	COMPONENT OF : UNDERCARRIAGE
DECIMALS ± .010"	SPEC.	MACHINE : VAMPIRE MK.33.
FRACTIONS ± 1/64"	TREATMENT	ENGINE : GOBLIN
ANGLES ± ½°	FINISH	TECH. ORDER : VAMPIRE MOD. Nº 78
SURFACE FINISH AUSTRALIAN STANDARD ENG. SPEC. PRACTICE A.S.E.S.	SCALE	
	DRAWN / TRACED	APPROVED / CHECKED
		DRAWING NO. A12008 SHT. 2. DRWG. A

Restricted

Air Force Head-Quarters

Technical Order

VAMPIRE MODIFICATION NO. 79

Application: Mk.30 and 31 (See para. 2a)

Classification: Class 2

CANOPY FITTING INSTRUCTION NOTICE - INTRODUCTION

Introduction

1. This modification authorises the introduction of a fitting instruction notice on the metal canopy rear fairings to ensure correct fitment of canopy and engagement of canopy retaining angle.

General

2. (a) This modification is applicable to Vampire Mks. 30 and 31 aircraft not incorporating the approved equivalent modification, De Havilland (Aust.) modification V.163.

(b) This modification is to be incorporated as follows:-

(i)	Aircraft in use	:	Not later than the next minor inspection after receipt of modification sets.
(ii)	Aircraft undergoing repair and inspection	:	During such repair or inspection.
(iii)	Spares	:	Modification of spares to be carried out at direction of Maintenance Command. Spares are: Sliding Hood Assys. A004929A - A79/501702

(c) No special tools are required.

(d) Man-hours : Approximately two (2) man-hours per aircraft.

(e) The trade mustering responsibility for the incorporation of this modification is painter.

Supply

3. No parts will be required for the incorporation of this modification.

Salvage

4. No parts will be rendered redundant by the incorporation of this modification.

Method of Incorporation

5. If the canopy is installed on the aircraft, ensure that the cockpit canopy is fitted in accordance with Australian Air Publication 828, section 5, paragraph 147.

6. Using red paint, stencil the words "IMPORTANT CHECK - RETAINING ANGLE MUST BE IN PROPER ENGAGEMENT" on the port side of the metal canopy rear fairing as shown on the drawing.

7. Record the modification in the Airframe Log Book.

Drawings

8. Drawing A12013 is attached herewith.

Effect on Weight and Balance

9. The effect of the incorporation of this modification on the weight and balance of the aircraft is negligible.

References	:	Files R.A.A.F. 9/84/67 and 150/4/8607 A.M. Mod. VAM.3108 D.H. Aust. Mod. V.163 L.M.C. Meeting No. 34
Attachment	:	Drawing A.12013
Date of Issue	:	7th October, 1953.

DO NOT SCALE

ISSUE NO	DATE	ALTERATION	D. T. S.		

USING RED PAINT, STENCIL ON PORTSIDE OF THE CANOPY REAR FAIRING ONLY THUS:

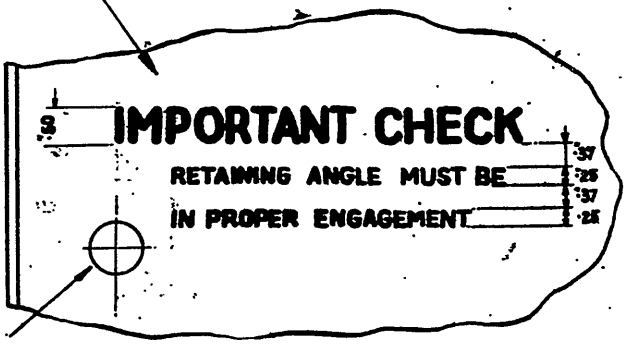

INSPECTION HOLE ON REAR FAIRING PORTSIDE OF CANOPY

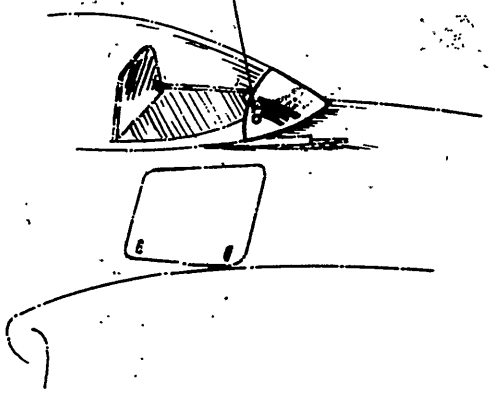

DE HAVILLAND DRG. Nº 00M217

REFERENCE	ISSUED BY	TITLE
	DIRECTORATE OF TECHNICAL SERVICES R.A.A.F.	CANOPY FITTING INSTRUCTION NOTICE -INTRODUCTION-

LIMITS UNLESS STATED		MATERIAL		COMPONENT OF	FUSELAGE
DECIMALS	± .010"	SPEC.		MACHINE	VAMPIRE MK. 30 & 31
FRACTIONS	± 1/32"	TREATMENT		ENGINE	NENE 2VH
ANGLES	± ½°	FINISH		TECH. ORDER	VAMPIRE MOD. Nº 79
SURFACE FINISH AUSTRALIAN STANDARD ENG. DRWG. PRACTICE A.S.C.I.		SCALE		DRAWING NO.	A12013
		DRAWN	APPROVED		DRWG. A SIZE
		TRACED	CHECKED		

Restricted

Air Force Head-Quarters

Technical Order

VAMPIRE MODIFICATION NO. 80

Application: Mk.33 (see para.2a)

Classification: Class 2

ELEVATOR QUADRANT AXLE IN STEEL - INTRODUCTION

Introduction

1. This modification authorises the introduction of an elevator quadrant axle in steel in lieu of aluminium alloy to increase strength and durability.

General

2. (a) This modification is applicable to Vampire Mk.33 aircraft not incorporating the approved equivalent modification, De Havilland (Aust.) modification V627.

(b) This modification is to be incorporated as follows:-

(i) Aircraft in use : Not later than the next minor inspection after receipt of modification sets.

(ii) Aircraft undergoing repair and inspection : During such repair or inspection.

(c) No special tools will be required.

(d) Man-hours : Approximately 25 man-hours per aircraft.

(e) The trade mustering responsibility for the incorporation of this modification is airframe fitter.

Supply

3. The following parts will be required to complete one modification set:-

Item No.	Ident. No.	Part No.	Nomenclature	No. off per a/c	Stores Class.
1	A79/503306	15.CF.323	Axle, elevator quadrant, steel	1	
2	H28B/5032	SP9/C8	Pin, split, 1/16" dia. x 1" long	9	C
3	H28/7278	A25/7C	Bolt, 2 B.A. x 1.15" long, hex, H.T.S.	1	C

Item No.	Ident. No.	Part No.	Nomenclature	No. off per a/c	Stores Class.
4	H28/5316	A16Y/CP	Nut, plain, 2 B.A. M/S.	1	C

Note: Items 1 to 4 inclusive will be delivered from De Havilland Aircraft Pty. Ltd. to Sub-modification Section 2 Aircraft Depot which will issue these items on demand.

Salvage

4. The following parts will be rendered redundant by the incorporation of this modification:-

Item No.	Ident. No.	Part No.	Nomenclature	No. off per A/c	Stores Class.
5		SP9/C8	Pin, split, 1/16" dia. x 1" long	9	C
6	H28/7278	A25/7C	Bolt, 2 B.A. x 1.15" long, hex, H.T.S.	1	C
7	H28/5316	A16Y/CP	Nut, plain, 2 B.A.	1	C
8	A79/502289	15.CF.65	Axle, elevator quadrant, alum. alloy.	1	

Note: Items 5 to 8 inclusive are to be disposed of in accordance with current authorised procedure.

Method of Incorporation

5. This modification will be incorporated according to the following sequence of operations:-

(a) Refer the Vampire Trainer Maintenance and Repair Manual, Section 3, Chapter 1, paragraph 15, and remove the portside pilot's seat as detailed therein.

(b) Refer the Manual, Section 3, Chapter 4, Figures 12 and 14, locate the elevator quadrant in the aircraft on the cockpit floor just outboard of the portside seat support bracket. Remove the lower engine cowl and slacken back the turnbuckles on the elevator cables to release the tension.

(c) Disconnect the four cables from the checkplates on the quadrant pulleys and also temporarily remove the cable guards which keep the cables in position. Retain all attaching parts, but discard the 7 split pins (item 5).

(d) Remove and retain the bolt and nut, together with the 2 distant pieces, which fasten the connecting rod to pulleys. Discard the split pin (item 5).

(e) Undo the nut on the threaded end of the quadrant axle at the inboard face of the seat support bracket. Retain the nut and the special washer. Discard the split pin (item 5).

(f) Locate the bolt through the hub and the axle which is found between the 2 pulleys and using a tubular spanner remove and discard the bolt and nut (items 6 and 7).

(g) Take out the Seegar circlip which retains the ball-bearing in the seat bracket. Then lightly tap out the axle (item 8) from the outboard end. Support the elevator quadrant assembly so as to prevent damage to any surrounding parts.

(h) Before inserting the new axle (item 1) take care that the holes in axle and hub will line up. Replace the ballrace, the Seegar clip, the special washer and the nut. Lock the nut with a new split pin (item 2).

(i) Fit a new bolt (item 3) and nut (item 4) through the holes in the axle and the hub. Peen the bolt over to lock.

(j) Connect up the flying control cables and the connecting rod, previously disconnected, using new split pins (item 2) where required.

(k) Retension the four cables as detailed in section 3, chapter 4 of the Manual, check the flying controls for correct functioning and replace the pilot's seat.

(l) Record the modification in the Airframe Log Book.

Drawings

6. No drawings will be required.

Effect on Weight and Balance

7. The effect of the incorporation of this modification on the weight and balance of the aircraft is negligible.

References : Files R.A.A.F. 9/84/16 and 150/4/8608.
D.H. Aust. Mod. V.627
A.M. Mod. VAM. 3232
L.M.C. Meeting No. 40

Date of Issue : 21st October, 1953.

Restricted

Air Force Head-Quarters

Technical Order

VAMPIRE MODIFICATION NO. 81

Application: Mk.33 (see para 2a)

Classification: Class 2.

CANOPY HATCH LIFTING LUGS - INTRODUCTION

Introduction

1. This modification authorises the introduction of lifting lugs on the canopy hatch to facilitate opening from the outside, when the cockpit is empty.

General

2. (a) This modification is applicable to Vampire Mk.33 aircraft not incorporating the approved equivalent modification, De Havilland (Aust) modification V629.

(b) This modification is to be incorporated as follows:-

(i) Aircraft in use : At next minor inspection after receipt of modification sets.

(ii) Aircraft undergoing repair and inspection : During such repair or inspection.

(c) No special tools will be required.

(d) Man-hours : Approximately eight (8) man-hours per aircraft.

(e) The trade mustering responsibility for the incorporation of this modification is airframe fitter.

Supply

3. The following parts will be required to complete one modification set:-

Item No.	Ident. No.	Part No.	Nomenclature	No. off per A/c	Stores Class.
1		15FC2213ND	Lug, lifting, canopy hatch	2	
2	H28/8308	AS1242/3C	Bolt, 2 B.A. x .7" long, csk. 90° H.T.S.	4	
3	H28/10288	AGS2001/C/1	Nut, 2 B.A. Metal Insert	4	
4	H128F/5307	Type 'Z'	Screws, P.K. No.4 x 5/16" long rd.hd.	20	
5	K3/353		Jointing Compound Spec. DTD.369A	AR	

Notes: (a) Items 1 to 4 inclusive will be delivered from De Havilland Aircraft Pty. Ltd. to Sub-modification Section 2 Aircraft Depot, which will issue these items on demand.

(b) Item 5 is to be drawn from unit stores.

Salvage

4. The following parts will be rendered redundant by the incorporation of this modification:-

Item No.	Ident. No.	Part No.	Nomenclature	No. off per A/c	Stores Class.
6		PK/ND4	Screws, P.K. No.4 x 5/16" long rd.hd.	20	
7	H28C/2809	AGS249/21	Bolt, 4 B.A. x 3/8" long csk. steel	4	
8	H28/10287	B.A.1	Nut, 4 B.A., Aerotight	4	

Note: Items 6 to 8 are to be disposed of in accordance with current authorised procedure.

Method of Incorporation

5. This modification is incorporated in the following sequence of operations:-

(a) Unlock and lift the canopy hatch.

(b) Locate the channel, which secures the hatch sealing strip. Refer drawing A12023 and remove sufficient of the channel attachment screws to obtain access to the two canopy edge strip nuts in the way of the new lifting lug. Discard the p.k. screws (item 6).

(c) Unscrew and remove the two bolts and nuts (items 7 and 8).

(d) Offer up the new canopy lifting lug (item 1) centrally about the two bolt holes and mark off its position on the canopy.

(e) With those lines as guides, mark off the centres of the two bolt holes on the lug to coincide with the existing holes in the canopy, using a pair of dividers.

(f) Pilot drill the lug with a No.27 (0.141 in. diameter) drill. Then using a No.11 (0.101 in. diameter) drill, open up the holes in the lug and the canopy in conjunction with each other to take a 2 B.A. bolt. Countersink the holes in the lug 90° to suit the heads of the screws.

(g) Clean off the surrounding finish in the way of the lifting lug and apply one coat of jointing compound (item 5) to the mating surfaces of the hatch strip and the lug.

(h) Attach the lug to the canopy using two bolts and nuts (items 2 and 3).

(i) Reattach the channel and sealing strip in their original position using new p.k. screws (item 4).

(j) When both sides of the canopy hatch are modified, repair the finish locally where necessary and close the hatch.

(k) Test the pressure cabin and the hatch sealing in accordance with current authorised procedure.

(l) Record the modification in the Airframe Log Book.

Drawings

6. Drawing A12023 is attached herewith.

Effect on Weight and Balance

7. The effect of the incorporation of this modification on the weight and balance of the aircraft is negligible.

References	:	Files R.A.A.F. 9/84/67 and 150/4/8612. D.H. Aust. Mod. V629 A.M. Mod. Vam.3224 L.M.C. Meeting No. 39
Attachment	:	Drawing A.12023.
Date of Issue	:	7th October, 1953.

ISSUE NO.	DATE	ALTERATION	D.I.L.	INITIALS	APPROVED
1	14-9-53				

HATCH LIFTING LUG 2-OFF

BOLTS CSK HD 4-OFF

STIFFNUTS 4-OFF

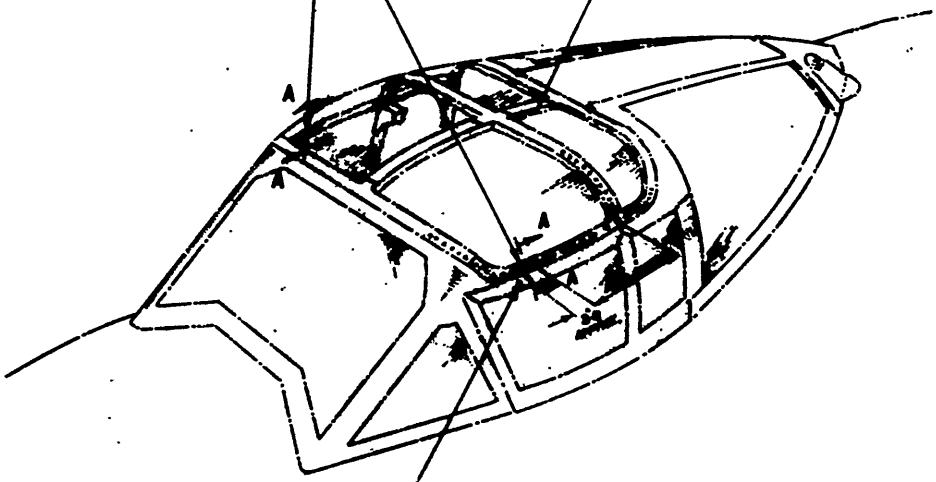

REMOVE EXISTING SCREWS IN THE APPROX POSITION SHOWN AND FIT LIFTING LUGS AS DETAILED IN TEXT OF LEAFLET

SECTION A-A

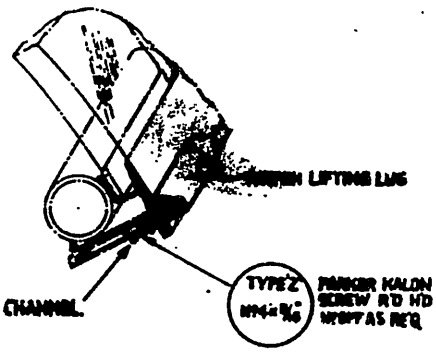

DE HAVILLAND DRG Nº 00M 236 SHEET 1

REFERENCE	ISSUED BY	TITLE
	DIRECTORATE OF TECHNICAL SERVICES R.A.A.F.	CANOPY LIFTING LUGS - INTRODUCTION

LIMITS UNLESS STATED		MATERIAL		COMPONENT OF	COCKPIT
DECIMALS	±.010"	SPEC.		MACHINE	VAMPIRE MK. 33
FRACTIONS	± 1/64"	TREATMENT		ENGINE	GOBLIN
ANGLES	± 1°	FINISH		TECH. ORDER	VAMPIRE MOD. Nº 81
SURFACE FINISH AUSTRALIAN STANDARD ENG. DRWG. PRACTICE A.E.C.I.		SCALE		DRAWING NO.	A12023
		DRAWN	APPROVED		DRWG. A SIZE
		TRACED	CHECKED		

Restricted

Air Force Head-Quarters

Technical Order

VAMPIRE MODIFICATION NO. 82

Application: Vampire Mk.33 (see para. 2a)

Classification: Class 2

CONTROL COLUMN GUARD - REINFORCEMENT

Introduction

1. This modification authorises the introduction of a distance piece at the lower end between the two halves of the control column chain guards, to prevent the possibility of the free edges of the guard fouling the turnbuckle on the chain, in the event of damage from the pilot's feet.

General

2. (a) This modification is applicable to Vampire Mk.33 aircraft not incorporating the approved equivalent modification De Havilland (Aust.) modification V.619.

(b) This modification is to be incorporated as follows:-

(i) Aircraft in use : Not later than the next minor inspection after receipt of modification sets.

(ii) Aircraft undergoing repair and inspection. : During such repair or inspection.

(c) No special tools will be required.

(d) Man-hours : Approximately eight (8) man-hours per aircraft.

(e) The trade mustering responsibility for the incorporation of this modification is airframe fitter.

Supply

3. The following parts will be required to complete one modification set:-

Item No.	Ident. No.	Part No.	Nomenclature	No. Off per A/c	Stores Class
1		15.CF29IND	Piece, distance, control column chain guard.	2	
2	H28/8507	AS.1242/5C	Bolt, 2 B.A. x .9" long, c's'k. 90°, H.T.S.	4	C
3	H28/5772	A24/CT	Lock Nut, 2 B.A. thin.	4	C

Note: Items 1 to 3 inclusive will be delivered from De Havilland Aircraft Pty. Ltd. to sub-modification section 2 Aircraft Depot, which will issue these items on demand.

4. No parts will be rendered redundant by the incorporation of this modification.

Method of Incorporation

5. This modification will be incorporated in the following sequence of operations:-

(a) Unlace the protective cover at the base of the portside control column.

(b) Remove and retain the four (4) nuts, bolts and washers securing the two halves of the chain guard to the control column and remove the forward chain guard.

(c) Refer drawing A.12029. Position the distance piece in accordance with the dimensions shown, mark off and drill two No.11 (0.192" diameter) holes in the rear chain guard to suit the distance piece.

(d) Now assemble the distance piece (item 1) to the rear chain guard, using two (2) new bolts (item 2) and nuts (item 3). Peen the new bolts to lock.

(e) Re-assemble the forward chain guard to the control column using the original attaching parts.

(f) Repeat the operations for the starboard side control column.

(g) Replace the protective covers.

(h) Check the control columns for correct functioning.

(i) Record the modification in the Air Frame Log Book.

Drawings

6. Drawing A.12029 is attached herewith.

Effect on Weight and Balance

7. The effect of the incorporation of this modification on the weight and balance of the aircraft is negligible.

References : Files R.A.A.F. 9/84/16 and 150/4/8613
D.H.Aust. Mod. V.619
A.M.Mod. VAM.3184
L.M.C. meeting No.38

Attachment : Drawing A.12029

Date of Issue : 23rd October, 1953.

ISSUE NO.	DATE	ALTERATION	D.I.L.	INITIALS	APPROVED
1	17-9-53				

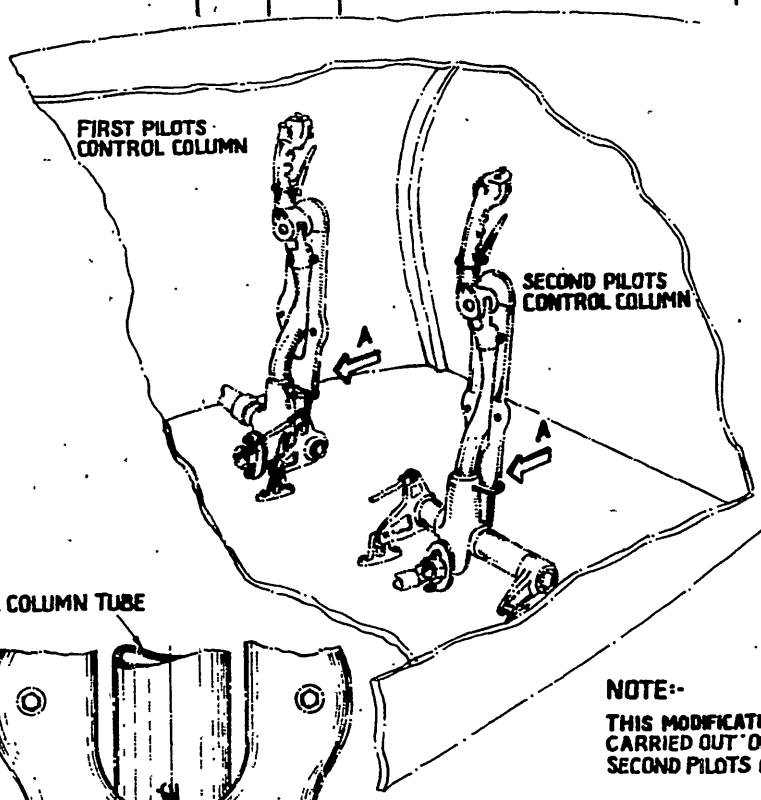

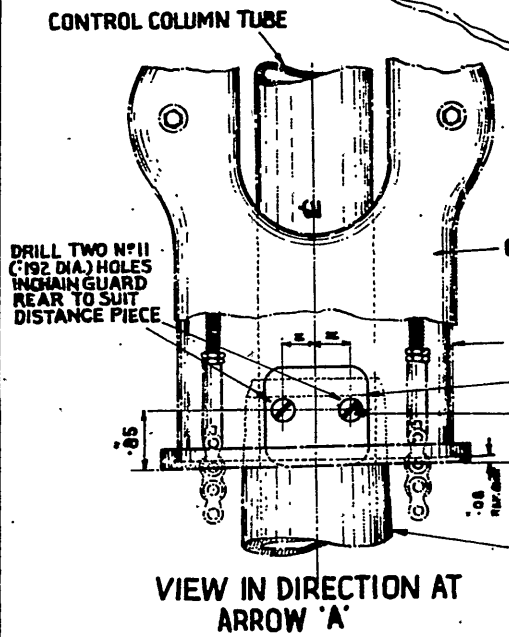

VIEW IN DIRECTION AT ARROW 'A'

NOTE:-

THIS MODIFICATION IS TO BE CARRIED OUT ON FIRST- AND SECOND PILOTS CONTROL COLUMN

15CF 291 N.D.	DISTANCE PIECE 1-OFF EACH CONTROL COLUMN
AS 1242 5C	BOLT 28A 2-OFF EACH CONTROL COLUMN PEEN TO LOCK
A24 CT	THIN NUT 2-OFF EACH CONTROL COLUMN

DE HAVILLAND DRG. No OOM 230 SHEET 1 No OF SHEETS 1

REFERENCE	ISSUED BY	TITLE
	DIRECTORATE OF TECHNICAL SERVICES. R.A.A.F.	CONTROL COLUMN GUARD REINFORCEMENT

LIMITS UNLESS STATED		MATERIAL		COMPONENT OF	COCKPIT
DECIMALS	±·010"	SPEC.		MACHINE	VAMPIRE MK. 35.
FRACTIONS	± 1/32"	TREATMENT		ENGINE	GOBLIN
ANGLES	± ½°	FINISH		TECH. ORDER	VAMPIRE MOD. No 82.
SURFACE FINISH		SCALE			
AUSTRALIAN STANDARD ENG. DRWG. PRACTICE A.S.E.P.		DRAWN	APPROVED	DRAWING No	A 12029
		TRACED	CHECKED		DRWG A SIZE

T51.

Restricted

Air Force Head-Quarters

Technical Order

VAMPIRE MODIFICATION NO. 83

Application: Vampire Mk.33 (see para. 2a)

Classification: Class 2

CONTROL LOCKING GEAR & STOWAGE - INTRODUCTION

Introduction

1. This modification authorises the introduction of a control locking gear complete with the stowage brackets, which are to be mounted on the radio shelf in the nose of the aircraft.

General

2. (a) This modification is applicable to Vampire Mk.33 aircraft not incorporating the approved equipment modification, De Havilland (Aust.) modification V.609.

(b) This modification is to be incorporated as follows:-

(i) Aircraft in use : Not later than the next minor inspection after receipt of modification sets.

(ii) Aircraft undergoing repair and inspection : During such repair of or inspection.

(c) No special tools will be required.

(d) Man-hours : Approximately six (6) man-hours per aircraft.

(e) The trade mustering responsibility for the incorporation of this modification is airframe fitter.

Supply

3. The following parts will be required to complete one modification set:-

Item No.	Ident. No.	Part No.	Nomenclature	No. off per a/c.	Stores Class.
1		15F1335A	Bracket, stowage, Cont. Locking Gear - Port	1	
2		15F1525A	Bracket stowage, Cont. Locking Gear - Stbd.	1	

Item No.	Ident. No.	Part No.	Nomenclature	No. off per a/c	Stores Class.
3	A79/503087	15Y79A	Assy. control locking strut	1	
4	H128F/30267	AS2227/404	Rivet, $\frac{1}{8}$" dia. x $\frac{1}{4}$" long zn.hd.	9	

Note: Items 1 to 4 will be delivered from De Havilland Aircraft Pty.Ltd. to Sub-modification Section 2 Aircraft Depot, which will issue these items on demand.

Salvage

4. No parts will be rendered redundant by the incorporation of this modification.

Method of Incorporation

5. This modification will be incorporated in the following sequence of operations:-

(a) Open and support the hinged nose cowl.

(b) Refer drawing A.12031 and locate the correct position of the starboard stowage bracket on the radio shelf in the nose compartment.

(c) Mark off and carefully cut away that part of the flange of the radio shelf that is in the way of the new bracket. Remove the sharp edges.

(d) Position the stowage bracket (item 2) and using the existing holes in the bracket as a guide, mark off the position of the three holes in the shelf and the two holes in the reinforcing channel. Drill five (5) No.30 holes and then assemble the bracket to the shelf using five (5) rivets (item 4).

(e) Refer drawing A.12031 again and position the portside bracket (item 1) as shown. Mark off and drill four (4) No.30 holes in the reinforcing channel. Then attach the bracket to the channel using four(4) rivets (item 4). Alter the part number of the radio shelf 15F295A to read 15F295A/2.

(f) Gain access to the cockpit and locate the 15/64 hole through the top joint casting and the tube top casting of the second pilot's control column.

(g) Ream the hole to ¼" diameter to suit the "pip" pin of the control locking strut.

(h) Fit the control locking strut to the 2nd. pilot's control column and the rudder pedals as indicated in the drawing and check for correct locking.

(i) Then attach the locking gear to the new stowage brackets on the radio shelf, with the spring plungers through the holes in the starboard stowage bracket and the other end of the strut resting in the portside stowage bracket. Tie the longest "pip" pin to the strut by means of its tie cable and pass the other pin through the fork end.

(j) Check for correct attachment.

(k) Record the modification in the Airframe Log Book.

Drawings

6. Drawing A.12031 is attached herewith.

Effect on Weight and Balance

7. The effect of the incorporation of this modification on the weight and balance of the aircraft is negligible.

References : Files R.A.A.F. 9/84/472 and 150/4/8614
D.H.Aust. Mod. V609
A.M.Mod.Vam.3141 Issue 2
L.M.C. Meeting No.37

Attachment : Drawing No. A.12031

Date of Issue : 23rd October, 1953.

ISSUE Nº	DATE	ALTERATION	D.I.L.	INITIALS	APPROVED
1	17-9-53				

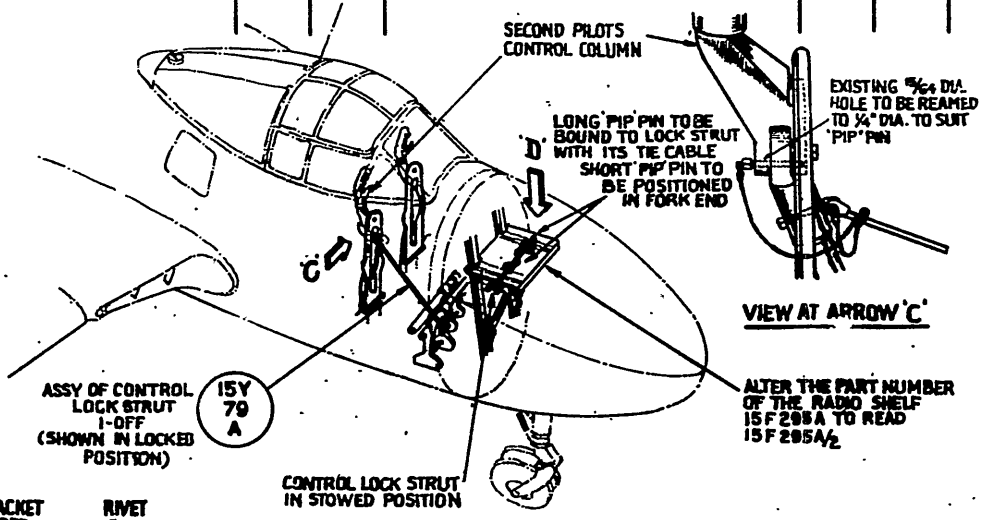

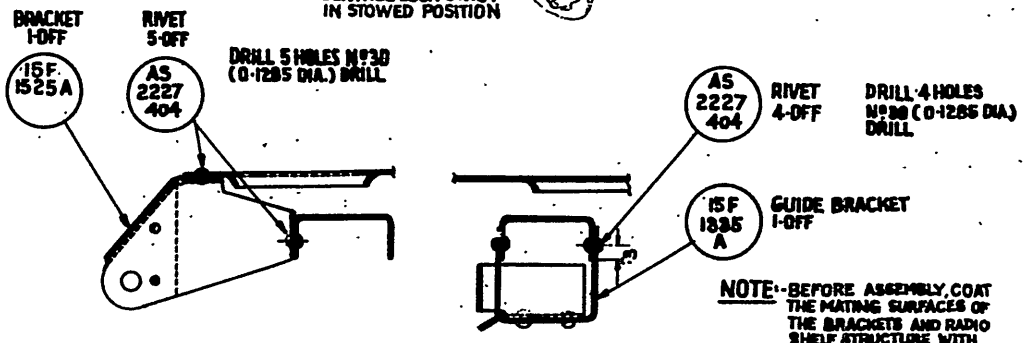

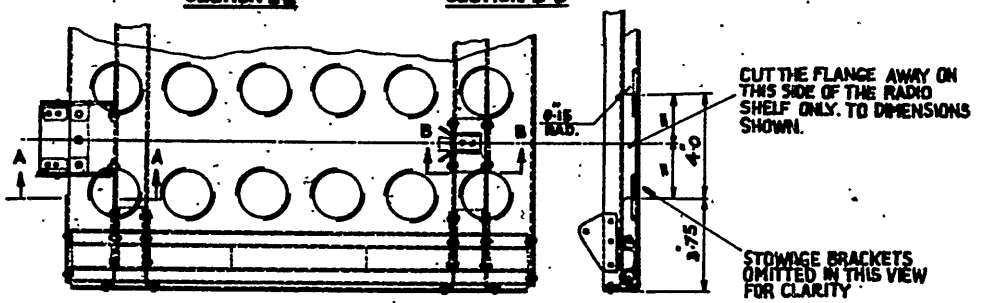

VIEW AT ARROW 'D' SHOWING ASSEMBLY OF STOWAGE BRACKETS TO RADIO SHELF

DE HAVILLAND DRG. Nº 00M 228 SHEET 1 Nº OF SHEETS 1

REFERENCE	ISSUED BY	TITLE
	DIRECTORATE OF TECHNICAL SERVICES. R.A.A.F.	CONTROL LOCKING GEAR AND STOWAGE. INTRODUCTION

LIMITS UNLESS STATED		MATERIAL		COMPONENT OF	COCKPIT
DECIMALS	±·010"	SPEC.		MACHINE	VAMPIRE MK·93.
FRACTIONS	± 1/32"	TREATMENT		ENGINE	GOBLIN
ANGLES	± ½°	FINISH		TECH. ORDER	VAMPIRE MOD. NO. 93
SURFACE FINISH		SCALE		DRAWING NO.	A 12031
AUSTRALIAN STANDARD ENG. DRWG. PRACTICE A.S.C.E.I.		DRAWN	APPROVED		DRWG. A SIZE.
		TRACED	CHECKED		

Restricted

Air Force Head-Quarters

Technical Order

VAMPIRE MODIFICATION NO. 84

Application: Vampire Mk.33 (see para. 2a)

Classification: Class 2

FRONT JET PIPE AND FIREGUARD DRAINS - EXTENSION TO ATMOSPHERE

Introduction

1. This modification authorises the extension of the front jet pipe drain and the fireguard drain through the cowling to the atmosphere, thus eliminating the risk of excess fuel being trapped inside of the cowling when starting up on the ground.

General

2. (a) This Modification is applicable to Vampire Mk.33 aircraft not incorporating the approved equivalent modification, De Havilland (Aust.) modification V.611.

(b) This modification is to be incorporated as follows:-

(i) Aircraft in use : Not later than the next minor inspection after receipt of modification sets.

(ii) Aircraft undergoing repairs and inspection : During such repair or inspection.

(c) No special tools will be required.

(d) Man-hours : Approximately twenty-five man-hours per aircraft.

(e) The trade mustering responsible for the incorporation of this modification is airframe fitter.

Supply

3. The following parts will be required to complete one modification set:-

Item No.	Ident. No.	Part No.	Nomenclature	No. off per A/c	Stores Class
1		L003747ND	Plate, reinforcing	1	
2		L003711A	Tube, guide assy.fwd.	1	

Item No.	Ident. No.	Part No.	Nomenclature	No. off per A/c	Stores Class.
3	H128F/62509	AS2229/405	Rivet, $\frac{1}{8}$" dia. x 5/16" long C'sk. 90° alum. alloy	18	
4		L003713A	Tube, guide assy. aft	1	
5	H128F/62510	AS2229/406	Rivet, $\frac{1}{8}$" dia x $\frac{3}{8}$" long C'sk. 90° alum. alloy	10	
6		L003721A	Pipe, drain, front, jet pipe	1	
7	H128F/63365	AS2229/404	Rivet, $\frac{1}{8}$" dia. x $\frac{1}{4}$" long, c'sk. 90° alum. alloy.	5	
8	H/9641		Alclad, DTD.610, 16 swg.	AR	
9	H/2700		Wire, locking, soft iron 20 swg.	AR	
10	K3/353		Jointing compound to Spec. DTD.369A	AR	
11	K3/162		Enamel Cellulose (Spec. DTD.63A)	AR	
12	K3/175		Zinc Chromate (S.A.A. INT.28)	AR	

Notes: (a) Items 1 to 7 inclusive are to be delivered from De Havilland Aircraft Pty. Ltd., to Sub-modification Section 2 Aircraft Depot which will issue these items on demand.

(b) Items 8 to 12 inclusive are to be drawn from unit stores.

Salvage

4. The following parts will be rendered redundant during the incorporation of this modification:-

Item No.	Ident. No.	Part No.	Nomenclature	No. off per A/c	Stores Class.
13		L002346	Well, drain pipe	1	
14	H128F/30236	AS2229/404	Rivet, $\frac{1}{8}$" dia. x $\frac{1}{4}$" long, csk. 90° alum. alloy	16	
15	A79/502887	L00956A	Connector, drain pipe	1	
16	A79/502925	L00958A	Adaptor, drain pipe	1	
17		L00954A	Pipe, drain	1	

Notes: (a) Items 13 to 17 inclusive are to be disposed of in accordance with current authorised procedure.

(b) Items 13, 15, 16 and 17 are obsolete.

Method of Incorporation

5. Disconnect the six toggle fasteners which secure the middle lower engine cowling panel and remove the panel from the aircraft.

(a) Rework of lower middle cowling panel:

(i) Locate the drain pipe well for the fireguard drain on the removed panel and carefully drill out the six rivets (item 14) securing the well to the cowling skin, using a No.32 drill. Discard the drain pipe well (item 13).

(ii) Refer drawing A12039 and enlarge the existing 1.1/4 inch diameter hole in the skin, until a 2.1/16 inch diameter hole is obtained, having its centre .2 inch aft of the centre of the original hole. It will be found that by this operation four of the six redundant holes have been practically absorbed. Blank off the remaining two rivet holes and the drain hole using three rivets (item 7).

(iii) Position the new reinforcing plate (item 1) and using the plate as a template mark off and drill eighteen No.30 and four 3/16 inch diameter holes in the cowling skin.

The eighteen No.30 holes are to be countersunk 90° x .22 inch diameter on the outer face.

(iv) Now secure the reinforcing plate together with the forward guide tube assembly (item 2) to the cowling panel as indicated on the drawing using eighteen rivets (Item 3).

(v) Refer drawing A12039 again. Locate and mark off the position of the 2.1/16 inch diameter hole through the rear attachment channel and the cowling skin, having its centre on the centreline of the bottom lightening hole and .34 inch forward of the centreline of the attachment channel.

(vi) Remove the two rivets (item 14) partly in the way and cut out the 2.1/16 inch hole. Blank off the two redundant rivet holes using two rivets (item 7) which are to be countersunk on both faces (90° x .22 inch diameter).

(vii) Carefully drill out the eight rivets (item 14) in the way of the new guide tube assembly (item 4).

(viii) Position the guide tube assembly mark off and drill eight No.30 holes in the guide tube mounting plate, two No.30 and two 1/4 inch diameter holes through the attachment channel and the skin.

(ix) Secure the guide tube assembly using ten rivets (item 5).

(x) Alter the part number of the cowling panel L0058A to read L0058A/1 - A79/502159.

(xi) Alter the part number of the attachment channel L00605 to read L00605/1.

(b) Further modifications to the Aircraft.

(i) Locate the front jet pipe drain adaptor in the centre of the lower landing of the rear cone.

(ii) Disconnect and remove the drain pipe connector (item 15). Then unscrew the four bolts securing the adaptor to the lower landing. Remove and discard the adaptor (item 16). Retain the four bolts and nuts.

(iii) Make up a blanking plate of a shape similar to the adaptor base plate using 16 swg. sheet to Specification DTD.610 (item 8).

(iv) Assemble the new blanking plate to the lower landing using the bolts and nuts retained in paragraph 5(b) (ii). Alter the part number of the rear cone L00853A to read L00853A/1 - A79/502161.

(v) Break the locking wire securing the front jet pipe drain pipe, remove and discard the drain pipe (item 17).

(vi) Assemble the new drain pipe (item 6) in lieu and secure with 20 swg. soft iron locking wire (item 9).

(vii) Replace the cowling panel and repair the finish locally where required using items 11 and 12.

(viii) Take care that during the incorporation of this modification all newly drilled holes are deburred and that jointing compound R.A.A.F. Ident. No. K3/353 (item 10) is applied to all mating surfaces.

(ix) Record the modification in the Airframe Log Book.

Drawings

6. Drawings A12039 is attached herewith.

Effect on Weight on Weight and Balance

7. The effect of the incorporation of this modification on the weight and balance of the aircraft is negligible.

References : Files R.A.A.F. 9/84/16 and 150/4/8615
D.H.Aust. Mod. V611
L.M.C. Meeting No.39
A.M.Mod. VAM.3161

Attachment : Drawing A.12039.

Date of Issue : 6th November, 1953.

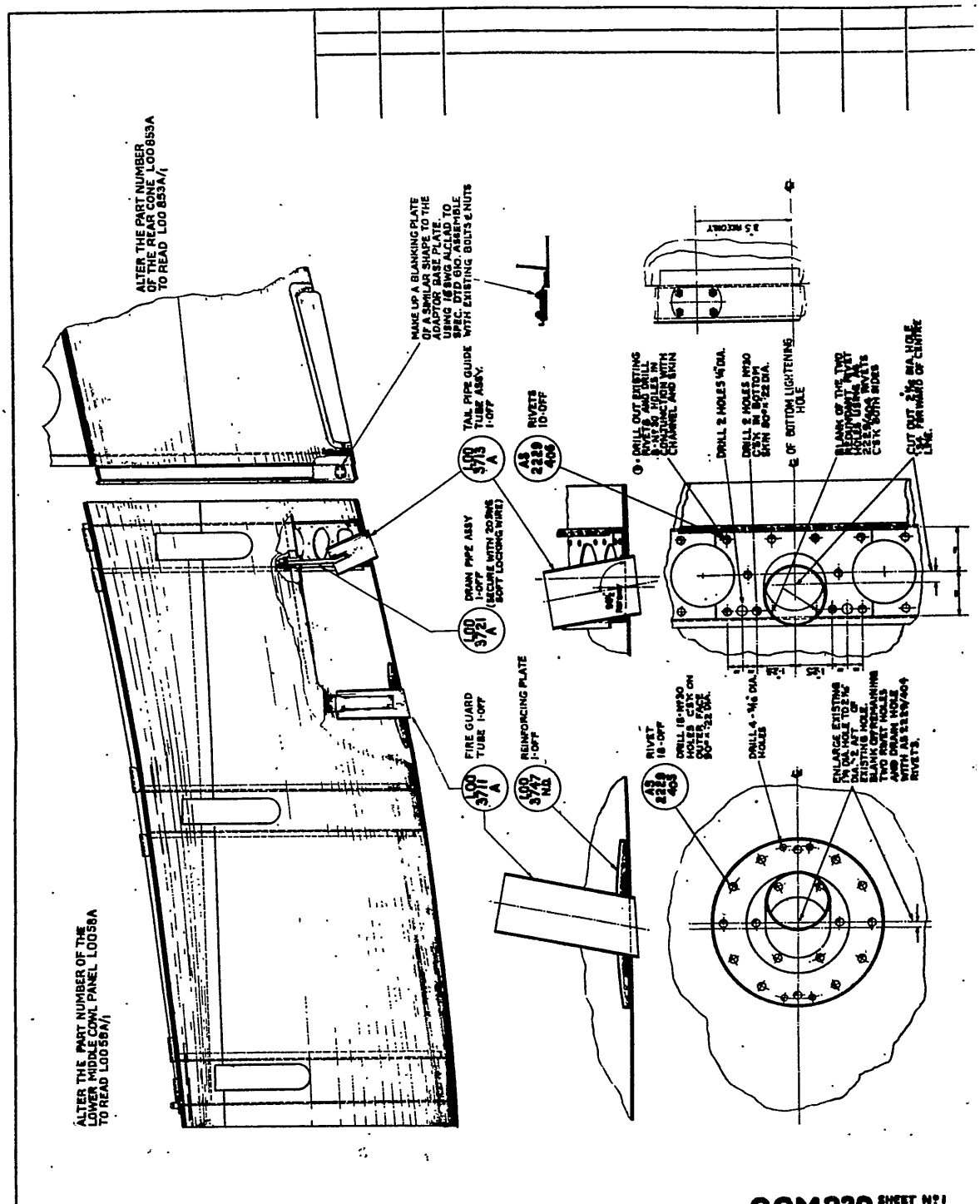

DE HAVILLAND DRG. Nº 00M239 SHEET Nº 1 Nº OF SHEETS 1

REFERENCE	ISSUED BY	TITLE
	DIRECTORATE OF TECHNICAL SERVICES R.A.A.F.	FRONT JET PIPE & FIREGUARD DRAIN EXTENSION TO ATMOSPHERE

LIMITS UNLESS STATED	MATERIAL			COMPONENT OF	FUSELAGE
DECIMALS	SPEC.			MACHINE	VAMPIRE MK 33
FRACTIONS	TREATMENT			ENGINE	GOBLIN
ANGLES	FINISH			TECH. ORDER	VAMPIRE MOD. 84
SURFACE FINISH AUSTRALIAN STANDARD ENG. DRWG. PRACTICE AS.CZ.1.	SCALE.			DRAWING Nº	A12039
	DRAWN		APPROVED		
	TRACED		CHECKED		

Restricted

Air Force Head-Quarters

Technical Order

VAMPIRE MODIFICATION NO. 85

Application: Mk.30 & 31 (see para. 2a)

Classification: Class 4

ROTAX WINDSCREEN DE-ICER PUMP M2601 - INTRODUCTION

Introduction

1. This modification authorises the introduction of an improved light weight version Rotax windscreen de-icer pump, M2601 - T27F/2162, to replace the existing type which is no longer available.

General

2. (a) This modification is applicable to Vampire Mk.30 and 31 aircraft not incorporating the approved equivalent modification De Havilland (Aust.) modification V.173.

(b) This modification is to be incorporated as follows:-

(i) Aircraft in use : On replacement of the existing de-icer pump.

(ii) Aircraft undergoing repair and inspection : On replacement of existing de-icer pump.

(c) No special tools will be required.

(d) Man-hours : Approximately six (6) man-hours per aircraft.

(e) The trade mustering responsibility for the incorporation of this modification is airframe fitter.

Supply

3. The following parts will be required to complete one modification set:-

Item No.	Ident. No.	Part No.	Nomenclature	No. off per A/c	Stores Class
1	T27F/2162	M2601	Pump, windscreen de-icer, Rotax	1	
2	A79/503330	BC02525	Bracket	1	A
3	H28/10001	AS1884/1B or	Bolt, 4BA x .45" long rd. hd. M.S.	3	C
	H28/11937	AS1246/1B	Bolt, 4BA x .45" long rd. Hd. HTS.	3	C

Item No.	Ident. No.	Part No.	Nomenclature	No. off per A/c	Stores Class.
4	H28/10287	AGS2001/B/1	Nut, stiff, 4BA M.S.	3	
5	H28C/12425	AGS1109/K	Union, reducing ¼" x ⅛"	1	
6	H28C/12245	SP10/C	Washer, 2BA	AR	
7	H28/10006	AS1884/2C	Bolt, 2BA x .6" long rd. hd. M.S.	3	
		or			
	H28/11255	AS1246/2C	- do - H.T.S.	3	
8	H28/11564	A1246/1C	Bolt, 2BA x 0.5" long rd. hd. H.T.S.	5	
9	H28/10288	AGS2001/C/1	Nut, stiff, 2BA, M.S.	8	
10	H28C/8225	AGS1138/A	Washer jointing couplings pipe AL .39" ID x 56 OD	2	
11	I1/1444		Wire, Locking, 20 swg. soft iron	AR	
12	K3/321		Enamel Cellulose Black	AR	

Note: Items 1 to 12 inclusive are to be drawn from unit stores.

Salvage

4. The following parts will be rendered redundant by the incorporation of this modification.

Item No.	Ident. No.	Part No.	Nomenclature	No. off per A/c	Stores Class.
13	H28C/8225	AGS1138/A	Washer	2	
14	T27F/1870		Pump de-icing	1	
15		B00217	Bracket	1	
16		6A1/2CR	Bolt, 2BA x .6" long rd. hd. L.T.S.	3	
17	H28/10288	C.P.1	Nut, Simmonds, 2BA	8	
18	H28C/2862	AGS245/13	Screw, 2BA x 1/2" long, rd. hd. steel	2	
19		6A1/1CR	Bolt, 2BA x .5" long, rd. hd. L.T.S.	3	

Notes: (a) Item 14 is to be held until all aircraft are modified.

(b) Item 15 is obsolete.

(c) Items 13, 15, 16, 17, 18 and 19 are to be disposed of in accordance with current authorised procedure.

Method of Incorporation

5. The following sequence of operations is the method for incorporating this modification:-

(a) Locate the existing pump at the lower part of the R.H. instrument panel.

(b) Disconnect the spray feed pipe and the supply pipe from the pump. Discard both washers (item 13).

(c) Undo the five bolts, which fasten the pump mounting bracket to the instrument panel and remove the bracket complete with the pump. Disconnect the pump from the bracket and discard all parts (items 14, 15, 16, 17, 18 and 19).

(d) Refer drawing A12040 and modify the pump clearance hole in the instrument panel as detailed thereon.

(e) Then assemble the new pump (item 1) to the new bracket (item 2) picking up on the three existing No.26 holes, using three screws (item 3) and three nuts (item 4). It will be necessary to remove the pump knob, before the pump can be assembled to the support bracket.

Note: (i) If pumps M2602 are supplied, it is necessary to remove the distance pieces and flange from the pump to convert it to M2601, thus enabling fitment.

(ii) It is possible that the pumps are supplied without a reducing union at the spray feed line entry. If so, a reducing union (item 5) is to be fitted.

(f) Position the pump and the bracket assembly on the instrument panel as detailed on the drawing.

Note: There will be five existing holes in the panel, formerly used for securing the old pump bracket, which are now redundant holes in the panel. It may be found impracticable to position the new bracket so that the holes in the bracket clear the redundant holes in the panel and one or two elongated holes may result. This is permissible if a washer (item 6) is fitted at the hole in question.

(a) Paragraph 5 (g), lines 3 to 5, insert "spot three holes from the bracket into the panel and five holes from the panel into the bracket as detailed on the drawing." in lieu of "spot five holes ..... drawing". temporaril-) diameter) panel, and letailed on

(h) Then remove the pump and bracket assembly from the panel, deburr the holes and finally secure the bracket to the panel using three bolts (item 7) in the flange of the panel, five bolts (item 8), eight nuts (item 9) and washers where necessary (see note paragraph 5(f)).

(i) Secure the existing pipelines to the pump, using new washers (item 10). Lock the union on the supply line with 20 swg. galvanised soft iron locking wire (item 11), and attach the wire to the panel flange.

(j) Paint all bolt heads black (item 12).

(k) Check the de-icer system in accordance with current authorised procedure.

(l) Record the modification in the Airframe Log Book.

Drawings

6. Drawing A12040 is attached.

Effect on Weight and Balance

7. The effect of the incorporation of this modification on the weight and balance of the aircraft is negligible.

References : Files R.A.A.F. 9/84/16 and 150/4/8616
D.H. Aust. Mod. V173
A.M. Mod. Vam. 883
L.M.C. Meeting No.38

Attachment : Drawing A.12040

Date of Issue : 6th November, 1953.

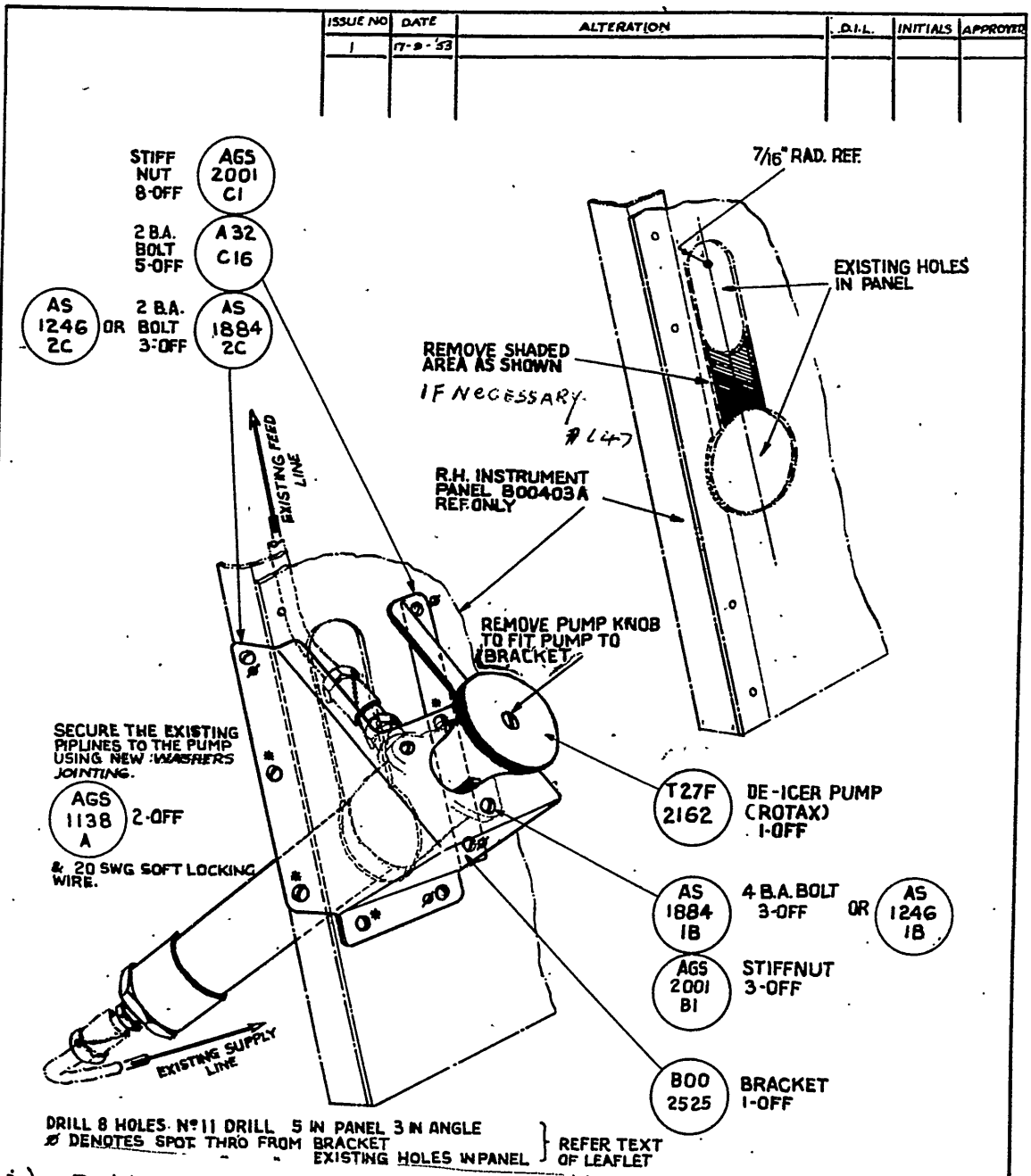

(ii) Bottom Diagram, delete "Ø" from the right hand screw, of the two screws, attaching the bottom flange of the bracket B00.2525 to the Instrument panel, and add "*".

ND DRG. Nº 00M 232 SHEET 1 Nº OF SHEETS 1

TITLE

ROTAX WINDSCREEN DE-ICER PUMP M2601 INTRODUCTION

R.A.A.F.			
LIMITS UNLESS STATED.		MATERIAL	
DECIMALS	±.010"	SPEC.	
FRACTIONS	± 1/32	TREATMENT	
ANGLES	± 1°	FINISH	
SURFACE FINISH AUSTRALIAN STANDARD ENG. DRWG. PRACTICE AS C.Z.1.		SCALE	
		DRAWN	APPROVED
		TRACED	CHECKED
COMPONENT OF	COCKPIT		
MACHINE	VAMPIRE MK 30 & 31.		
ENGINE	NENE - 2VH		
TECH. ORDER.	VAMPIRE MOD. Nº 85.		
DRAWING NO.	A12040	DRWG. SIZE.	A

Air Force Head-Quarters

VAMPIRE MODIFICATION NO. 86

Technical Order

Classification : 2

V.H.F. RADIO SET TYPE TR1936 IN VAMPIRE MK.30 AIRCRAFT - INTRODUCTION OF

Reason for and Description of Modification

1. This modification authorises the introduction of a V.H.F. Radio Set Type TR1936 in lieu of the existing V.H.F. Radio Set Type TR1520, to provide 10 channel instead of 4 channel operation.

2. This modification assumes that Vampire Modification No. 62 (Introduction of G3F Compass) either has been incorporated or is to be incorporated simultaneously. The latter will be most convenient and is therefore recommended.

Application

3. This modification is applicable to all Vampire Mk.30 aircraft. (D.H. Serial No. 4001 to 4050, inclusive) and also to Vampire aircraft A79-5 Mk.31.

Responsibility for Incorporation

4. Holding units will be responsible for the incorporation of this modification.

Action in Respect of Spares

5. Not applicable.

Orders Superseded or Cancelled

6. Not applicable.

Equivalent Modifications

7. D.H.(Aust.) Modification V.108 is the equivalent modification.

Supply

8. The following items are required to complete one modification set:-

Item No.	Ident. No.	Part No.	Nomenclature	No. off per set	Stores Class
1		00N413	Plate sealing	1	C
2	A79/500934	N0055	Gasket, plug sealing	1	C
3	G5A/26729	CZ.2100	Plug, bulkhead	1	A
4	H280/2876	AGS.245/32	Screw, 6 BA x 3/4" long rd. hd., steel	4	C

Supply (Cont'd)

Item No.	Ident. No.	Part No.	Nomenclature	No. off per set	Stores Class.
5	H28/10286	AGS.2001/A/1	Nut, stiff, 6 BA	4	C
6		N981744 Mk. 3	Gasket, paper, plug sealing	1	C
7	A79/500935	N0057	Gasket, rubber, plug sealing plate	1	C
8	Y10D/17695		Transmitter, receiver, type TR.1936	1	A
9	A79/502026	00N421A	Cable assy., transmitter to Bulkhead	1	C
10		00B41	Plate, cover, L.H. instrument panel	1	C
11	H28/10006	AS1884/2C	Bolt, 2BA x .6" long, rd. hd., M.S.	3	C
12	H28/10007	AS1884/3C	Bolt, 2 BA x .7" long, rd. hd. M.S.	2	C
13	H28/10288	AGS.2001/C/1	Nut, stiff, 2 BA	7	C
14	H28C/12252	SP13/C	Washer, plain, 2 BA	7	C
15		00N483A	Bracket, mounting, controller	1	C
16	H28/10005	AS1884/1C	Bolt, 2 BA x .5" long, rd. hd., M.S.	2	C
17	Y10L/246		Unit, control, type 382, c/w top mounting bolt	1	A
18	H28C/2856	AGS.245/12	Screw, 2 BA x 3/8" long, rd. hd., steel	2	C
19		00N41	Bar, bus	1	C
20	G105C/1870		Breaker, circuit, 20 amps.	1	A
21	G5E/30110		Cable, AN18, one core vin. spec. AN-JC-48(a)	7'	C
22	G5E/30155		Cable, AN18, one core vin, spec. C.107	9'	C
22a		6A1/2CR	Bolt, 2 B.A. x .65 long, rd.hd.	4	C
23		0	Terminal, Ross Courtney	1	C
24	H28/26077	DHS.103/1	Ferrule, 4 B.A.	2	C
25		N00218IND	Patch, ply, 2" x 1" x 2 mm thick	1	C
26	G5C/432		Block, terminal, 3 way	1	A
27	H28C/8421	AGS.251/21	Woodscrew, No.4 x 3/8" long c's'k, M.S.	2	C
28	G5C/2007		Relay type "Q"	1	A
29	H28C/2869	AGS.245/23	Screw, 4 BA x 5/8" long, rd. hd., steel	2	C
30	H128F/ 56054	1206	Washer, shakeproof	2	C
31	A79/502027	00N419A	Cable assy. bulkhead to controller	1	C
32		00N417A	Cable assy., bulkhead to mictel	1	C

Supply (Cont'd)

Item No.	Ident. No.	Part No.	Nomenclature	No. off per set	Stores Class.
33		N002177A	Cable assy., "Q" type relay to centre panel	1	C
34		N002175A	Cable assy., "Q" type to L.H. panel	1	C
35		N002179A	Cable assy., 3 way, T.B. to mic-tel	1	C
36	H28/26107	DHS.30/10	Clip, cable	3	C
37			Polon varnish	AR.	C
38	K4/10883		Bostik primer No. 1751	AR.	C
39	K4/10882		Bostik, sealing compound No. 1790	AR.	C
40			Paint, white	AR.	C
41			Twine, waxed, to spec. F35	AR.	C

Notes: (a) Items 1 to 7 inclusive, 9 to 16 inclusive and 18 to 36 inclusive are to be delivered from De Havilland Aircraft Pty. Ltd. to Sub-modification Section 2 A.D. Richmond. Sub-modification Section will issue these items on demand.

(b) Items 8 and 17 will be delivered to Master Modification Centre.

(c) Items 37 to 41 inclusive are to be drawn from unit stores.

Disposal of Parts Removed

9. The following items are rendered redundant by the incorporation of this modification:-

Item No.	Ident. No.	Part No.	Nomenclature	No. off per A/C	Stores Class
42	Y10D/2067		Transmitter receiver, type TR.1520	1	A
43		C0N143A	Cable assy., transmitter to bulkhead 2	1	C
44	A79/500935	N0057	Gasket, rubber, plug sealing plate	1	C
45	A79/500934	N0055	Gasket, plug sealing	2	C
46	Y10H/1919		Plug, bulkhead	1	A
47	H28C/2875	AGS.245/24	Screw, 4 BA x 3/4", rd. hd. steel	6	C
48	H28/10287	BP1/M	Nut, pinnacle, 4 B.A.	6	C
49		C0N115	Plate, sealing	1	C
50	Y10L/151		Control Unit, type 295	1	A
51	H28C/2862	AGS245/13	Screw, 2 BA x 1/2" long rd. hd., steel	3	C

Disposal of Parts Removed (Cont'd)

Item No.	Ident. No.	Part No.	Nomenclature	No. off per A/C	Stores Class.
52		OON137A	Bracket, mounting, control unit	1	C
53	H28/8457	AS1882/2C	Bolt, 2 BA x .6" long, 90° c's'k, M.S.	4	C
54		B002805	Plate, blanking	1	C
55	H28/8456	AS1882/1C	Bolt, 2 BA x .5" long, 90° C's'k, M.S.	4	C
56	H28/10288	C.P.1	Nut, pinnacle, 2 B.A.	4	C
57		OON39	Bar, bus	1	C
58	G105C/1868		Breaker, circuit, 10 amps	1	A
59	H28/26103	DHS.30/6	Clip, cable	3	C
60	H28/26101	DHS.30/4	Clip, cable	3	C
61		OON145A	Cable assy., bulkhead to controller	1	C
62		OON135A	Cable assy., bulkhead to mic-tel and instrument panel	1	C
62a		6A1/3CR	Bolt, 2 B.A. x 75 long rd. hd.	4	C

Note: These items are to be actioned in accordance with A.F.O. 19/B/19.

Disposal of Parts in Stock

10. Items 42, 43, 46, 50, 52, 61 and 62 are to be returned to Stores Depots, pending decision of future use and operational requirements. Items 44, 45, 47, 48, 49, 51, 53 to 60 and 62 are current for other uses.

When Modification is to be Incorporated

11. This modification is to be carried out in all applicable Vampire Mk.30 aircraft as soon as practicable, but not later than the next minor inspection after receipt of parts.

Method of Incorporation

12. (a) Man-hours involved : Approximately fifty (50 man-hours are required to incorporate this modification, divided as shown:-

Fitter 2A - 10 man-hours
Elect. Fitter - 10 man-hours
Rad. Tech. - 30 man-hours

(b) Special Tools, Jigs, &c. : Nil.

Method of Incorporation (Cont'd)

(c) Sequence of Operations :

Modification between Bulkheads No. 2 and No. 3

(i) Open the ammunition door, disconnect the four electrical cables from the TR.1520, V.H.F. radio and remove the transmitter-receiver (item 42) from its mounting tray.

(ii) Locate the plug sealing plate at the L.H. upper part of Bulkhead No. 2. Disconnect the four sockets (two on each bulkhead face) from the plugs in the sealing plate. Discard the cable (item 43) which ran from the transmitter-receiver to the upper plug in the sealing plate. Retain the cable which ran to the lower plug.

(iii) Undo the eight bolts, &c., securing the plug sealing plate to the bulkhead. Discard the rubber gasket (item 44) but retain all other parts.

(iv) Remove the lower plug from the sealing plate, discard the gasket (item 45). Then fit the plug to the new sealing plate (item 1) using the original attaching parts and a new gasket (item 2).

(v) Also assemble the new plug (item 3) to the new sealing plate using new parts, items 4, 5 and 6. Treat the paper gasket on both faces with Polon Varnish (item 37), as detailed on drawing A.12066, sheet 2.

(vi) Dismantle the upper plug from the redundant sealing plate and discard all parts (items 45 to 49).

(vii) Attach the new plug sealing plate to the bulkhead in the original position with the parts retained and a new rubber gasket (item 7). Apply Bostik (items 38 and 39) to pressurise.

Note: If this modification is incorporated simultaneously with Vampire Modification No.62, carry out the operations detailed above in conjunction with paragraphs 40 and 48 of Vampire Modification No. 62.

(viii) Fit the TR.1936 transmitter-receiver (item 8) to the existing mounting tray.

(ix) Reconnect the two cables, leading from bulkhead No.3 to the new transmitter as indicated on drawing A.12066 sheet 1. Attach the cable, retained in paragraph 6, to the lower plug in the sealing plate and to the

transmitter. Also attach the new cable (item 9) to the upper plug in the sealing plate and to the radio transmitter.

(x) Close the ammunition doors.

Modification to L.H. Instrument Panel

(xi) Locate the TR.1520 radio controller unit on the lower half of the L.H. Instrument Panel and disconnect the electrical cable from the unit.

(xii) Disconnect the control unit from its mounting bracket and discard the unit (item 50) together with its three mounting screws (item 51).

(xiii) Then remove the mounting bracket and discard all parts (items 52 and 53).

(xiv) Assemble the new cover plate (item 10) over the cut-out in the instrument panel using 2 bolts (item 11), 2 bolts (item 12), 4 nuts (item 13) and four washers (item 14).

(xv) Refer drawing A.12066, sheet 4, and locate the blanking plate at the upper half of the instrument panel in the way of the new TR.1936 radio controller unit. Remove and discard the blanking plate (item 54) together with its attaching parts (items 55 and 56).

(xvi) Drill two No. 11 holes in the panel in accordance with the dimensions shown and assemble the new controller mounting bracket (item 15) to the panel to agree with the drawing, using one bolt, nut and washer (item 11, 13 and 14) at the top and 2 bolts, nuts and washers (items 16, 13 and 14) at the bottom.

(xvii) Then fit the new controller unit (item 17) to its mounting bracket with two new screws (item 18) and the top mounting screw, supplied with the unit.

(xviii) Alter the Part No. of the bare panel B001093A to read B001093A/1. Note that the part No. of the complete L.H. Instrument Panel Assembly B001086A alters to B001086A/1.

Modification to Junction Box No. 1

(xix) Locate Junction Box No. 1 at the starboard side of the cockpit and remove the front panel.

(xx) Refer drawing A.12066, sheet No. 5 and remove the bus bar (item 57) interconnecting ten of the circuit breakers in the bottom row. Then fit the new bus bar (item 19) in lieu. This bus-bar also connects up the eleventh circuit breaker, which is marked "spare".

(xxi) Locate and remove the 10A circuit breaker No. 22 (item 58). Fit the new 20A circuit breaker (item 20) in lieu, connect up the electrical leads and mark the circuit breaker. "No. 22 - V.H.F. Radio Supply".

(xxii) Locate the 5A circuit breaker No. 40 and alter the word "spare" to read P to T+.

(xxiii) Determine the length required for a AN18 one core (item 21) leading from circuit breaker No. 40 to plug C3 pin X. Make up the cable, using a Ross Courtney terminal (item 23) at one end. Then attach the cable to circuit breaker No. 40 and to pin X of plug C3. Add code "P to T+" to the new cable, using nylex tape.

(xxiv) Alter the Part No. of the Junction Box OON13A/2 to read OON13A/3.

(xxv) Locate the label for the circuit breaker bottom row on the removed J.B. front panel and alter the word "spare" to read "TR.1936 - P to T+" using white paint (item 40). Do not engrave.

(xxvi) Alter the Part No. of the label OON45 to read OON45/1.

(xxvii) Replace the junction box front panel.

Note: The above modifications may be incorporated simultaneously with Vampire Modification No. 62, paragraphs 79 to 82.

(xxviii) Follow through the cable in the cockpit which was previously disconnected from the upper plug in the bulkhead sealing plate.
Undo the cable clips, which fasten the cable to the fuselage side and to the instrument panel. Discard the three cable clips nearest to Bulkhead No. 2 (item 59) and the three cable clips on the lower part of the instrument panel (item 60) but retain all other parts. Discard the complete cable (item 61). Replace the instrument panel fixing bolts, to which the clips were attached with four new bolts (item 22a).

(xxix) Also remove the cable, leading from the lower plug in the sealing plate to the terminal block on the centre instrument panel and to the microphone-telephone terminal blocks (item 62).

(xxx) Refer drawing A.12066, Sheet No.3 and assemble the two new ferrules (item 24) and the 2 mm ply patch (item 25) to the port fuselage side in accordance with the dimensions shown.

(xxxi) Attach the new 3 way terminal block (item 26) to the ply patch using screws (item 27) and the "Q" type relay (item 28) to the two 4 BA. ferrules, using 2 bolts (item 29) and 2 washers (item 30).

(xxxii) Refer the wiring diagram and connect up the new electrical cables as follows:-

(1) Item 31 - from the upper plug in the sealing plate to the new control unit on the L.H. instrument panel.

(2) Item 32 - Attach the socket to the lower plug in the sealing plate.
Attach the 1 foot 6 inch core, code P to T+, to the "Q" type relay, Pin 5.
Attach the 1 foot 6 inch core, code mic to the 3 way terminal block.
Attach the 7 foot 0 inch core, code TEL to the terminal block on the pilot's seat (TEL)

(3) Item 33 - from "Q" type relay, pin 1, to the terminal block on the centre instrument panel.

(4) Item 34 - from "Q" type relay, pin 2, to the earth terminal on the L.H. instrument panel.

(5) Item 35 - From 3 way terminal block to the terminal block on the pilot's seat (MIC)

(6) Item 22 - From "Q" type relay, pin 6, to the terminal block on the pilot's seat (TEL) 8 foot 6 inch long.

(7) " " - From "Q" type relay, pin 3, to the 3 way terminal block, 2.5 inch long.

(8) " " - From "Q" type relay, pin 4, to the 3 way terminal block, 2.5 inch long.

(d) Tests : Equipment functional test.

(e) Recording : An entry, to indicate that this modification has been incorporated, is to be made in the airframe log book.

Drawings

13. Drawing A.12066, sheets 1 to 5 is attached.

Effect on Weight and Balance

14. Amendments to Weight Sheet summaries will be consolidated and issued by Air Force Head-Quarters.

15. The effect of this modification on the weight and balance of the aircraft is as follows:-

REMOVABLE EQUIPMENT

Item	Weight (lb.) ±	Arm (in.) ±	Moment (Min) ±
Removed			
Transmitter-receiver (TR1520)	- 22.0	- 34.8	+ 766
Control Unit (Type 295)	- 0.5	- 81.6	+ 41
Installed			
Transmitter-receiver (TR1936)	+ 26.25	- 34.8	- 914
Control unit (type 382)	+ 0.6	- 81.6	- 49
	+ 4.35		- 156

References : Files R.A.A.F. 201/60/404 and 150/4/8625.

Attachment : Drawing A.12066 sheets 1 to 5.

Date of Issue : 30th March, 1954.

DO NOT SCALE

ISSUE NO	DATE	ALTERATION	B. L. L.	INITIALS	APPROVED
1					

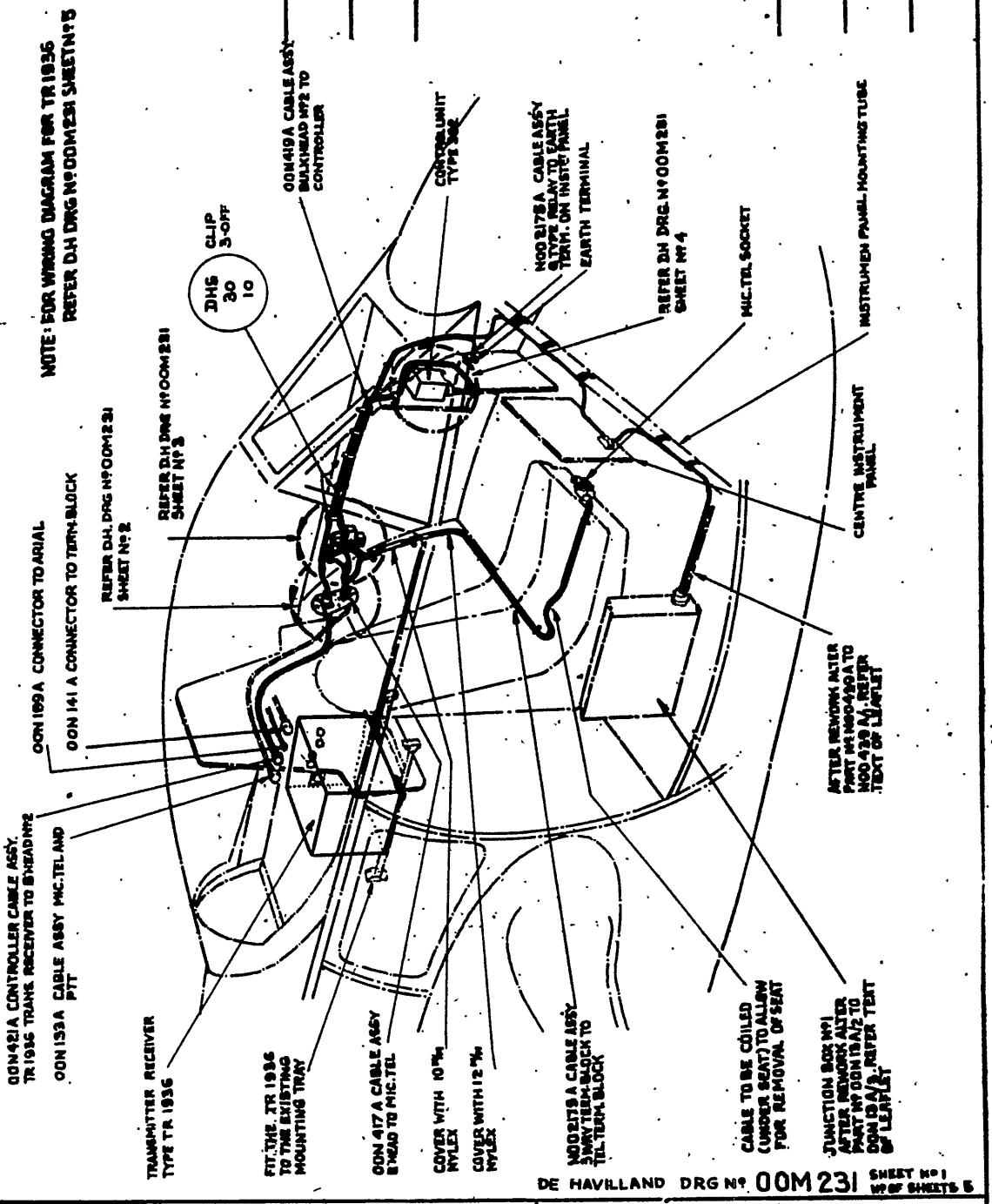

DE HAVILLAND DRG Nº 00M231 SHEET Nº 1 Nº OF SHEETS 5

REFERENCE	ISSUED BY	TITLE
	DIRECTORATE OF TECH. SERVICES R.A.A.F.	TR. 1936 - VHF RADIO INTRODUCTION

LIMITS UNLESS STATED		MATERIAL		COMPONENT OF	
DECIMALS	± .010"	SPEC.		MACHINE	VAMPIRE MK. 30 + A 79-5
FRACTIONS	± 1/32"	TREATMENT		ENGINE	
ANGLES	± ½°	FINISH		TECH. ORDER	VAMPIRE MOD. 86
SURFACE FINISH AUSTRALIAN STANDARD ENG. DRWG. PRACTICE A.S.B.201		SCALE		DRAWING NO.	A12066 SHT. 1 OF 5 SHTS.
		DRAWN	APPROVED		DRWG. A SIZE
		TRACED	CHECKED		

DO NOT SCALE

ISSUE NO.	DATE	ALTERATION	B. I. L.
1			

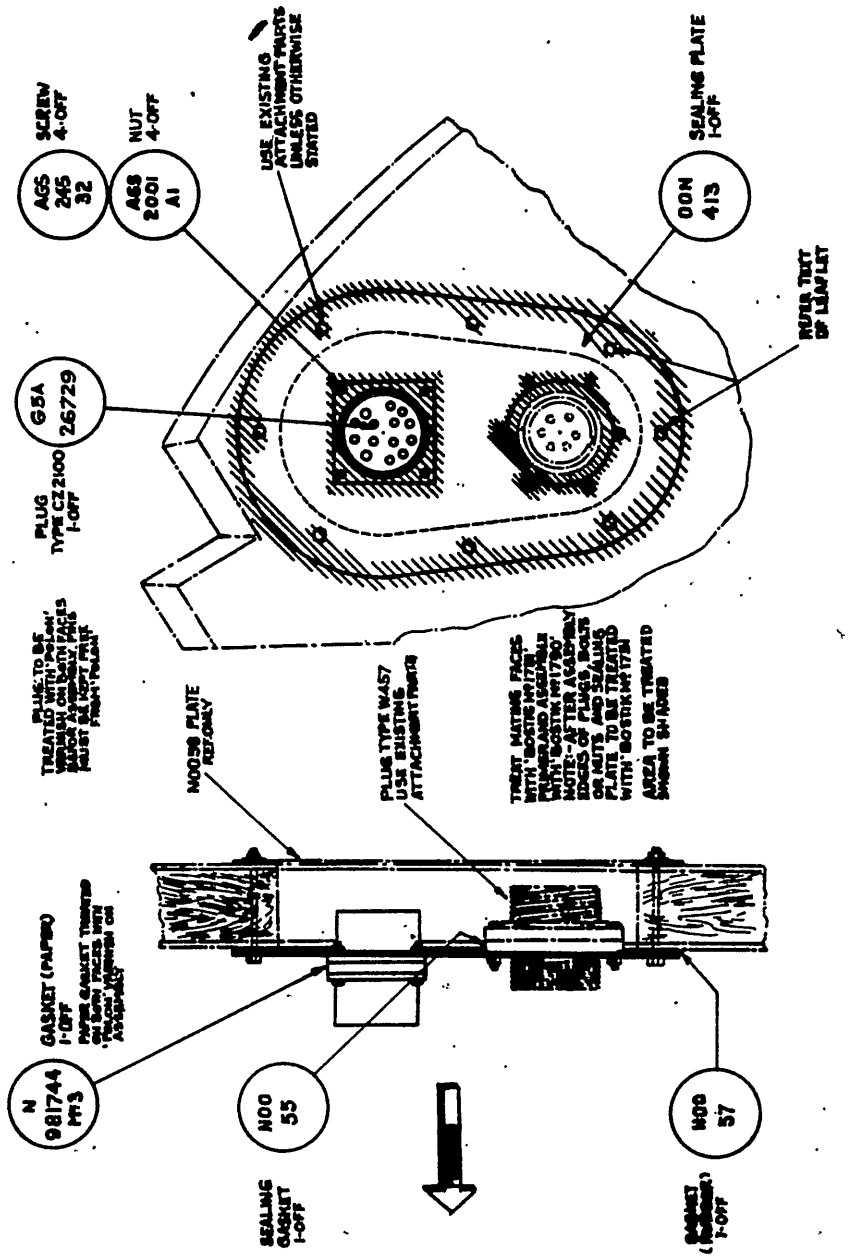

DE HAVILLAND DRG Nº 00M231 SHEET NO. 2 OF SHEETS 5

REFERENCE	ISSUED BY	TITLE
	DIRECTORATE OF TECH. SERVICES R.A.A.F.	TR.1956 . VHF RADIO INTRODUCTION

LIMITS UNLESS STATED		MATERIAL		COMPONENT OF	
DECIMALS	± .010"	SPEC.		MACHINE	VAMPIRE MK.30 + A79-5
FRACTIONS	± 1/32"	TREATMENT		ENGINE	
ANGLES	± ½°	FINISH		TECH. ORDER	VAMPIRE MOD. 68
SURFACE FINISH AUSTRALIAN STANDARD ENG. DRWG. PRACTICE A.S.E.21		SCALE		DRAWING NO.	A12066 SHT. 2 OF 5 SHTS. DRWG. A SIZE
		DRAWN	APPROVED		
		TRACED	CHECKED		

DO NOT SCALE

ISSUE NO.	DATE	ALTERATION

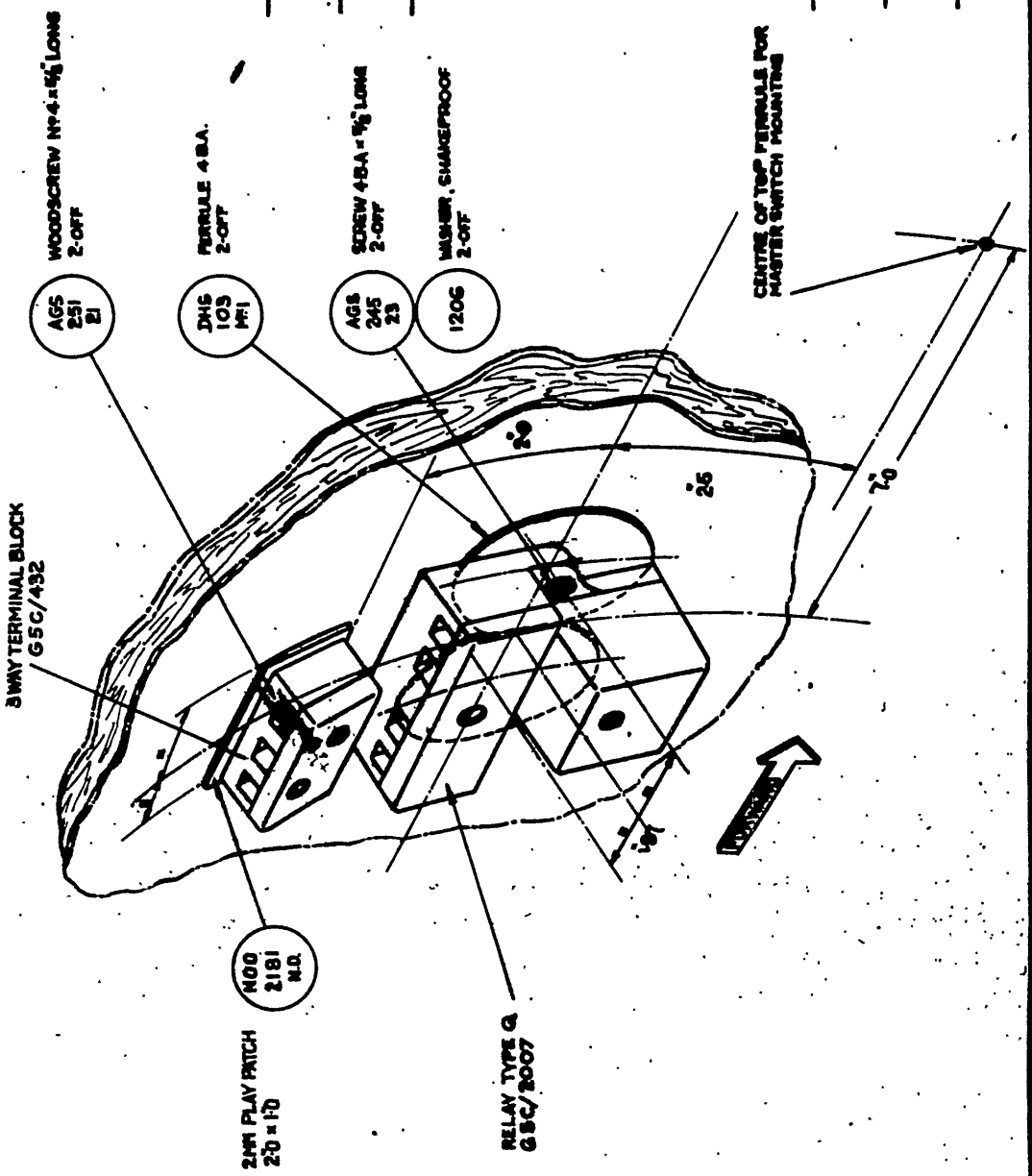

DE HAVILLAND DRG No 00M231 SHEET No 3 INTERPRETS 5

REFERENCE		ISSUED BY		TITLE	
		DIRECTORATE OF TECH. SERVICES R. A. A. F.		TR. 1936 - VHF RADIO INTRODUCTION	
LIMITS UNLESS STATED		MATERIAL		COMPONENT OF	
DECIMALS	± .010"	SPEC.		MACHINE	VAMPIRE MK.30 + A71-5
FRACTIONS	± 1/32"	TREATMENT		ENGINE	
ANGLES	± ½°	FINISH		TECH. ORDER	VAMPIRE MOD. 86
SURFACE FINISH AUSTRALIAN STANDARD ENG. DRWG. PRACTICE A.S.(R)		SCALE		DRAWING NO.	A12066 SHT. 3 OF 5 SHTS. DRWG. A SIZE
		DRAWN	APPROVED		
		TRACED	CHECKED		

DO NOT SCALE

ISSUE NO.	DATE	ALTERATION

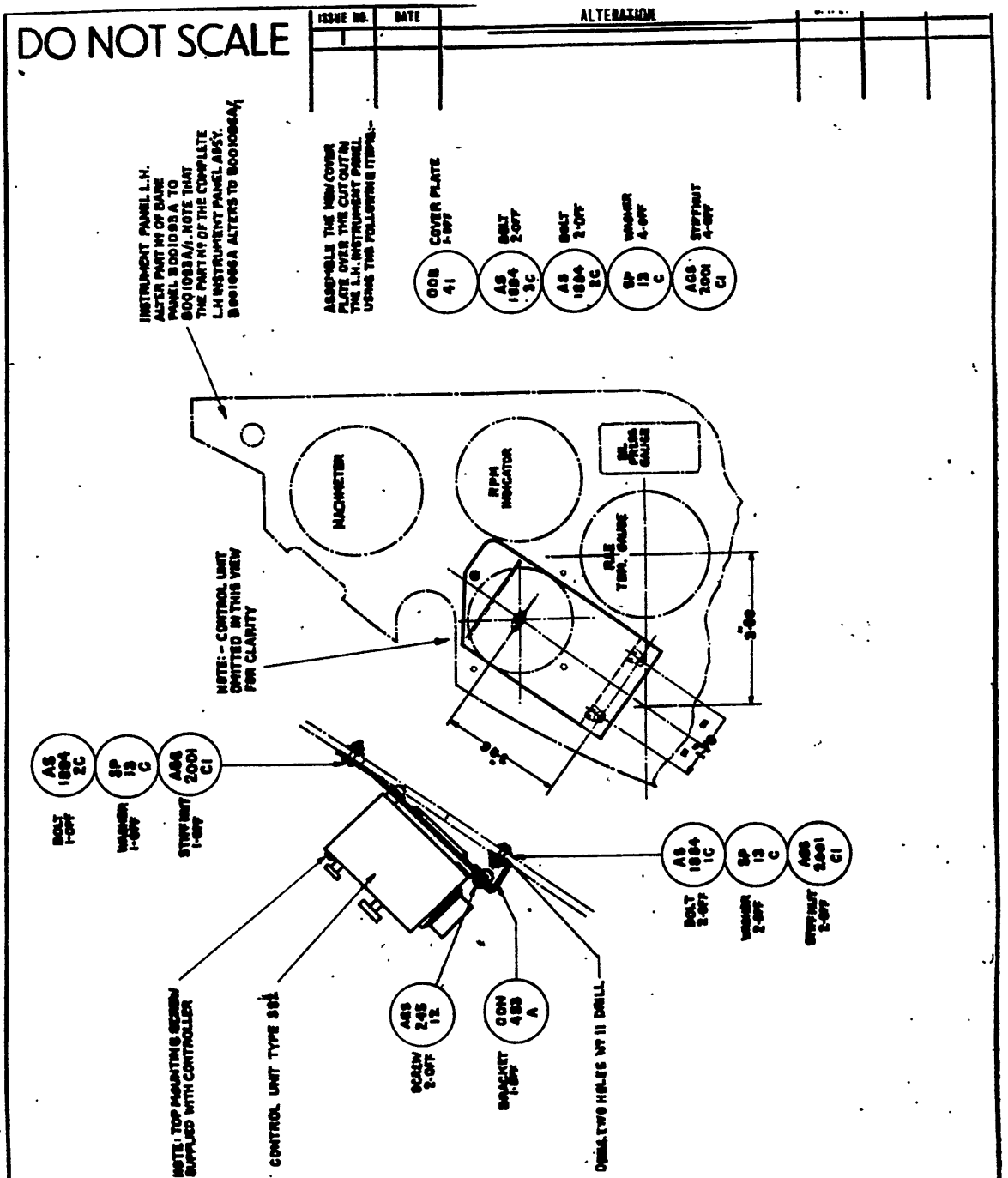

DE HAVILLAND DRG.Nº 00M231 SHEET Nº 4 OF SHEETS 5

REFERENCE	ISSUED BY	TITLE
	DIRECTORATE OF TECH. SERVICES R.A.A.F.	TR.1956 - VHF. RADIO INTRODUCTION

LIMITS UNLESS STATED		MATERIAL		COMPONENT OF	
DECIMALS	±.010"	SPEC.		MACHINE	VAMPIRE MK30 + A79-5
FRACTIONS	±1/64"	TREATMENT		ENGINE	
ANGLES	±½°	FINISH		TECH. ORDER	VAMPIRE MOD. 86
SURFACE FINISH AUSTRALIAN STANDARD		SCALE		DRAWING NO.	A12066 SHT. 4 OF 5 SHEETS
		DRAWN	APPROVED		DRWG. A SIZE
		TRACED	CHECKED		

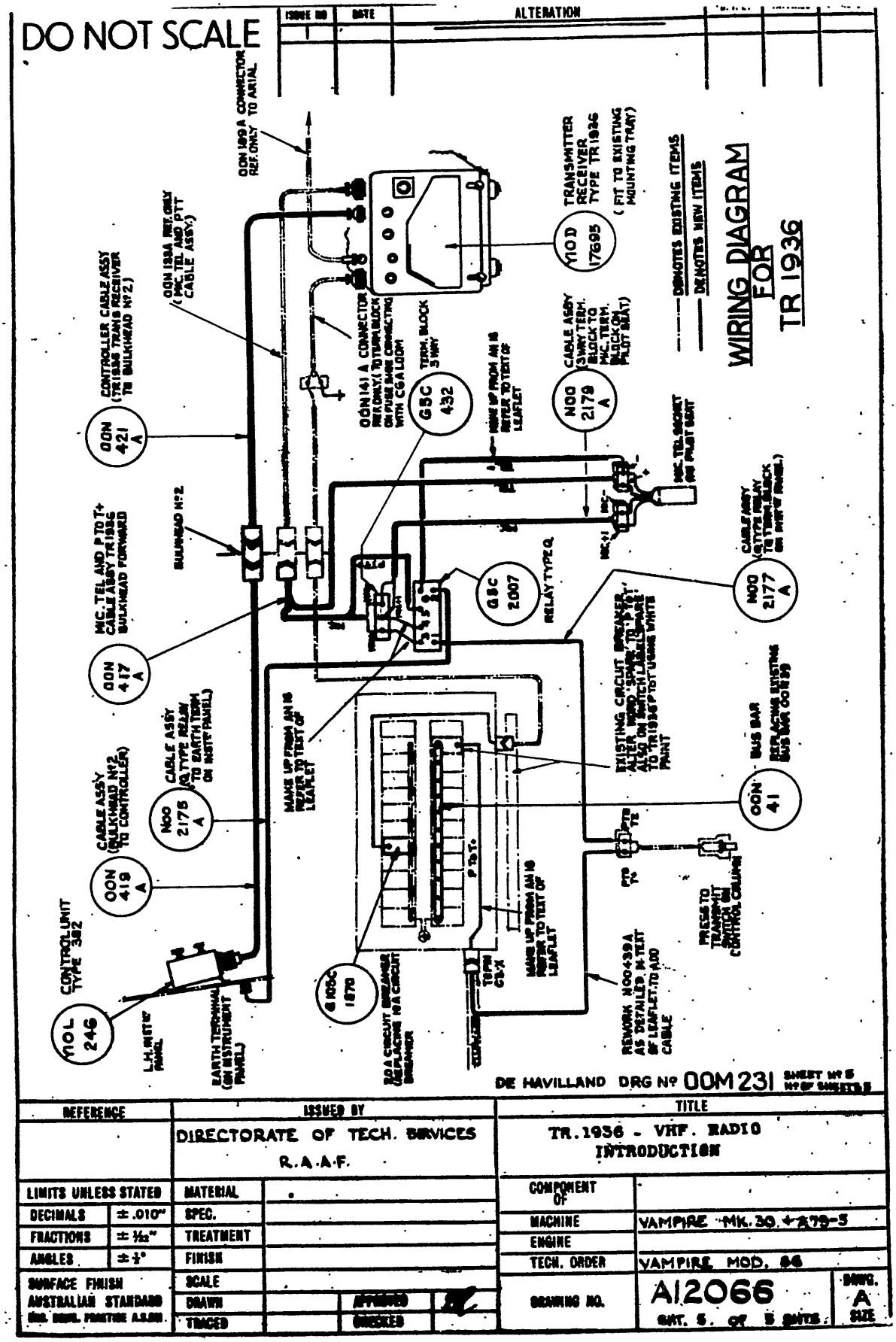

REFERENCE	ISSUED BY	TITLE
	DIRECTORATE OF TECH. SERVICES R.A.A.F.	TR.1936 - VHF. RADIO INTRODUCTION

LIMITS UNLESS STATED		MATERIAL		COMPONENT OF	
DECIMALS	± .010"	SPEC.		MACHINE	VAMPIRE MK. 30 + A79-3
FRACTIONS	± 1/32"	TREATMENT		ENGINE	
ANGLES	± ½°	FINISH		TECH. ORDER	VAMPIRE MOD. 86
SURFACE FINISH AUSTRALIAN STANDARD		SCALE		DRAWING NO.	A12066 SHT. 5. OF 5 SHTS.
		DRAWN	APPROVED		SIZE A
		TRACED	CHECKED		

Air Force Head-Quarters

Technical Order

VAMPIRE MODIFICATION NO.87

Application: Mk.30 and Mk.31 (see para.2a)

Classification: Class 4.

AUXILIARY AIR INTAKES - REINFORCEMENT

Introduction

1. This modification authorises the introduction of a reinforcing bracket assembly to support the lower inner duct faces of the auxiliary air intake, in which fatigue cracks have developed.

General

2. (a) The modification is applicable to Vampire Mk.30 and 31 aircraft not incorporating the approved equivalent modification De Havilland Modification V.125.

(b) This modification is to be incorporated as follows:-

(i) Aircraft in use : As a repair method immediately a defect is observed.

(ii) Aircraft undergoing repair and inspection : At the next major inspection.

(iii) Spares : Modification of spares to be carried out at direction of Maintenance Command Headquarters.

(c) No special tools are required.

(d) Man-hours : Approximately forty (40) man-hours per aircraft.

(e) The trade mustering responsibility for this modification is airframe fitter.

Supply

3. The following parts are required to complete one modification set:-

Item No.	Ident. No.	Part No.	Nomenclature	No. Off Per A/c	Stores Class.
1		00L275MD	Plate reinforcing	2	
2		00L277A	Bracket assy., support L.H.	1	
3		00L278A	Bracket assy., support R.H	1	

Supply (Cont'd)

Item No.	Ident. No.	Part No.	Nomenclature	No. Off Per A/c	Stores Class.
4	H128F/5719	AS2230/404	Rivet, c's'k, 120° $\frac{1}{8}$" x $\frac{1}{4}$" long	288	
5	H128F/5725	AS2230/405	Rivet, c's'k, 120° $\frac{1}{8}$" x 5/16" long	60	
6	H128F/30281	AS2227/506	Rivet, snap head 5/32" x $\frac{3}{8}$" long	56	
7	H128F/30282	AS2227/507	Rivet, snap head, 5/32" x 7/16" long	8	
8	H128F/6065	AS2230/402	Rivet, c's'k 120° $\frac{1}{8}$" x $\frac{1}{8}$" long	10	

Note: Items 1 to 8 are to be delivered from De Havilland Aircraft Pty. Ltd. to Sub-modification Section 2 A.D., which will issue these items on demand.

Salvage

4. The following parts are rendered redundant by the incorporation of this modification:-

Item No.	Ident. No.	Part No.	Nomenclature	No. Off Per A/c.	Stores Class.
9		L002413A	Support assy., duct, L.H.	1	
10		L002414A	Support assy., duct, R.H.	1	
11	H128F/5719	AS2230/404	Rivet, c's'k 120°, $\frac{1}{8}$" x $\frac{1}{4}$" long	250	
12	H128F/5725	AS2230/405	Rivet, c's'k 120° $\frac{1}{8}$" x 5/16" long	40	
13	H128F/30281	AS2227/506	Rivet, snap head, 5/32" x $\frac{3}{8}$" long	56	
14	H128F/30282	AS2227/507	Rivet, snap head, 5/32" x 7/16" long	8	

Note: Items 9 to 14 are to be disposed of in accordance with current authorised procedure.

Method of Incorporation

5. Refer Australian Air Publication 828, Section 5, paragraph 144 and figure 46 and remove the top engine cowling panel as detailed therein.

6. Carefully drill out the rivets holding the starboard air intake fairing to the cowling panel. Discard the rivets (items 11 and 12).

Method of Incorporation (Cont'd)

7. Remove the fairing by sliding it over the air duct in a forward direction. Retain the $\frac{1}{8}$ inch thick felt ring (Part No.L002395) at the joint of duct and fairing.

8. Disconnect and retain the four bolts and washers holding the lower end of the duct support to the cowling.

9. Carefully drill out the thirty rivets (items 13 and 14) holding the air duct to the cowling panel and then drill out the five rivets (item 11) securing the support to the air duct. Discard the air duct support (item 10).

10. Blank off the five redundant holes in the air duct using rivets (item 8).

11. Refer Drawing A.12030. Temporarily fasten the new support bracket (item 3) to the cowling panel with the four bolts retained in paragraph 8 picking up through the original holes in the panel.

12. Position the air duct and line up the holes in the new reinforcing plate (item 1) with the respective holes in the bracket. Mark off the position of the reinforcing plate on the air duct. Remove the Air duct.

13. Spot twenty-four (24) holes through from the reinforcing plate into the air duct and rivet the plate to the air duct using twenty-four (24) rivets (item 4).

14. Remove the support bracket from the cowling panel (refer paragraph 11). Position the bracket, spot from the holes in bracket through the reinforcing plate and the air duct and rivet as shown using ten (10) rivets (item 5).

15. Replace and rivet the air duct to the cowling panel with twenty-six (26) rivets (item 6) and four (4) rivets (item 7).

WARNING NOTE: Carefully line up the holes in the top cowling panel and in the air duct flange before riveting. In cases where the diameter of the holes is found to be too large, oversize rivets are to be used.

16. Secure the support bracket to the cowling panel with the original bolts and washers as described in paragraph 11.

17. Replace the fairing and fit the felt ring retained in paragraph 7 at the joint of duct and fairing. It is important that the leading edge and the inner duct faces are parallel within 10 inches in 4.0 inches. Rivet in accordance with the warning note in paragraph 15 using rivets (items 4 and 5).

18. Apply one coat of zinc chromate primer K3/176 and two coats of aluminium enamel K3/162.

Method of Incorporation (Cont'd)

19. Repeat these operations similarly for the port air intake.

20. Replace the cowling panel.

21. Record the modification in the Air Frame Log Book.

Drawings

22. Drawing A.12030 is attached.

Effect on Weight and Balance

23. The effect of the incorporation of this modification on the weight and balance of the aircraft is negligible.

References	:	Files R.A.A.F. 9/84/16 and 150/4/8628 D.H. Aust. Mod. V.125 L.M.C. Meeting No.26
Attachment	:	Drawing A.12030
Date of Issue	:	14th April, 1954.

DO NOT SCALE

ISSUE NO	DATE	ALTERATION	B. L.	INITIALS	APPROVED
1	17-9-53				

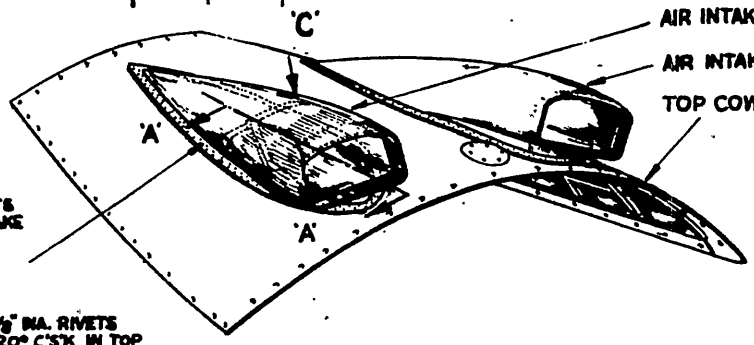

DRILL OUT THE RIVETS HOLDING THE AIR INTAKE FAIRING TO THE TOP COWLING PANEL

RE-RIVET WITH
AS 2230 404 — 246-OFF
AS 2230 405 — 40-OFF
1/8" DIA. RIVETS 120° C'SK IN TOP FACE OF AIR INTAKE FAIRING

NOTE:- IT IS IMPORTANT THAT LEADING EDGE AND INNER DUCT FACES ARE PARALLEL WITHIN .010 IN 4'0

DRILL OUT RIVETS HOLDING THE AIR DUCT TO THE TOP COWLING PANEL

RE-RIVET WITH
AS 2227 506 — 56-OFF
AS 2227 507 — 8-OFF

BLANK OFF EXISTING HOLES IN AIR DUCT WITH
AS 2230 402 — 10-OFF — FLUSH BOTH SIDES

DRILL HOLES IN AIR DUCT TO MATCH WITH AIR DUCT STIFFENER BRACKET AND REINFORCING PLATE

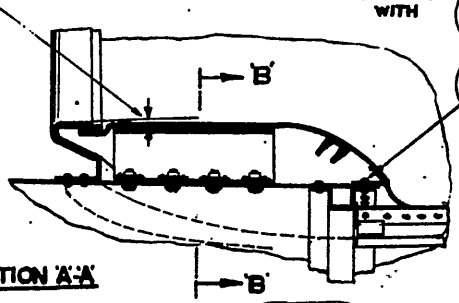

SECTION 'A-A'

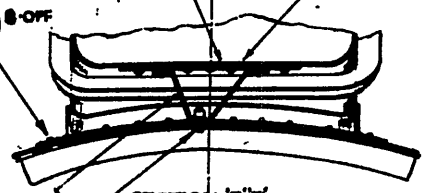

SECTION 'B-B'

FELT RING L002395 N.A. REF.

SCREWS 8-OFF REF. ONLY
WASHER 8-OFF
AS 1935 IC
AGS 160 C — FIT IN EXISTING HOLES IN TOP COWLING PANEL

R.H. OOL 276 A — L.H. OOL 277 A — AIR DUCT STIFFENER BRACKET 1-OFF EACH

OOL 275 N.D. — REINFORCING PLATE 2-OFF

1/8" DIA. RIVETS 120°
AS 2230 405 — 20-OFF — FLUSH INSIDE OF DUCT
48-OFF — AS 2230 404

VIEW ON ARROW 'C'

Nos OFF ARE PER A/C

DE HAVILLAND DRG. No OOM 202

REFERENCE	ISSUED BY	TITLE
	DIRECTORATE OF TECHNICAL SERVICES R.A.A.F.	AUXILIARY AIR INTAKES-REINFORCEMENT

LIMITS UNLESS STATED		MATERIAL	
DECIMALS	± .010"	SPEC.	
FRACTIONS	± 1/32"	TREATMENT	
ANGLES	± 1°	FINISH	
SURFACE FINISH AUSTRALIAN STANDARD ENG. DRWG. PRACTICE A.S.E.21		SCALE	
		DRAWN	APPROVED
		TRACED	CHECKED

COMPONENT OF	FUSELAGE
MACHINE	VAMPIRE MK. 30 & 31
ENGINE	Nene 2VH
TECH. ORDER	VAMPIRE MISC. No 97
DRAWING NO.	A12090.

DRWG. A SIZE

Restricted

Air Force Head-Quarters

Technical Order

VAMPIRE MODIFICATION NO. 88

Application: Mk.33
(see para.2)

Classification: Class 2

FIREPROOFING OF RIB NO.1 - INTRODUCTION

Introduction

1. This modification authorises the introduction of fibre fairleads where the flying control cables pass through rib No.1 and the blanking off of the circular holes in rib No.1 to prevent damage to the flying control cables in the event of a fire.

General

2. (a) This modification is applicable to Vampire Mk.33 aircraft not incorporating the approved equivalent modification, De Havilland (Aust.) modification V.615.

(b) This modification is to be incorporated as follows:-

(i) Aircraft in use : Not later than the next minor inspection after receipt of modification sets.

(ii) Aircraft undergoing repair and inspection : During such repair or inspection.

(c) Special tools required:-

One set of tools necessary to retension the flying control cables as described in the Vampire Trainer Manual, Section 3, Chapter 4.

(d) Man-hours : Approximately thirty (30) man-hours per aircraft.

(e) The trade mustering responsibility for the incorporation of this modification is airframe fitter.

Supply

3. The following parts will be required to complete one modification set:-

Item No.	Ident. No.	Part No.	Nomenclature	No. Off Per A/c	Stores Class
1	H28/7271	A25/1B	Bolt, 4 B.A. x .5" long hex, H.T.S.	9	

Item No.	Ident. No.	Part No.	Nomenclature	No. Off Per A/c	Stores Class.
2	H28/7272	A25/2B	Bolt, 4 B.A. x .6" long, hex, H.T.S.	16	
3	H28/7273	A25/3B	Bolt, 4 B.A. x .7" long, hex, H.T.S.	20	
4	A79/503420	12.CF.599	Fairlead, aileron balance cable	2	
5	A79/503421	13.CF.553	Fairlead, trim cables, Port side only	1	
6	A79/503423	13.CF.549	Fairlead, Starboard	1	
7	A79/503422	13.CF.551	Fairlead, Port	1	
8	H28/10215	AGS.2008/B 1	Nut, S/M double anchor, 4 B.A.	6	
9	H28/10287	AGS.2001/B	Nut, S/M-Metal Insert, 4 B.A.	39	
10		13.W231	Plate, sealing Port	1	
11		13.W.233	Plate, sealing Stbd.	1	
12		13.W.229ND	Strip, packing, .6" wide x 3.75" long	2	
13		13.W.227ND	Plate, blanking, lower Port	1	
14		13.W.225ND	Plate, blanking, upper, Port	1	
15		13.W.235ND	Plate, blanking, Starboard	1	
16	H128F/15099	AS2227/304	Rivet, 3/32" dia. x 1/4" long, sn.hd., alum.alloy	15	
17	H128F/62230	AS2229/304	Rivet, 3/32" dia. x 1/4" long, csk.90° alum.alloy	12	
18	H28C/12306	SP15/B	Washer, 4 B.A.	39	
19	H28C/12496	SP15/E	Washer, ¼" BSF.	4	
20	H28B/5032	AGS.784/3	Pin, split, 1/16" dia. x	12	

"20A.....H128F/62302....AGS2050/530/BS.....Rivet, Pop, Nickel Alloy, Dome Hd.5/32 x .30 lg. ....6"

Note: Items 1 to 20 inclusive will be delivered from De Havilland Aircraft Pty.Ltd. to Sub-Modification section 2 Aircraft Depot which will issue these items on demand. "Item 20A is to be

Salvage

4. The following parts will be rendered redundant by the incorporation of this modification:-

Item No.	Ident. No.	Part No.	Nomenclature	No. Off Per A/c	Stores Class.
21	H28B/5032	AGS.784/3	Pin, split, 1/16" dia. x 1" long	12	
22	H128F/31627	AS2227/403	Rivet, 1/8" dia. x 3/16" long, sn.hd., alum.alloy	10	

Note: Items 21 and 22 are to be disposed of in accordance with current authorised procedure.

Method of Incorporation

5. This modification is incorporated in the following sequence of operations:-

(a) Remove the lower engine cowel panel and select the flaps "down" to gain access to the inboard and outboard faces of rib No.1.

(b) Lock the elliptical pulleys at the forward end of each tailboom, so that the tension in the tailboom part of the flying control cables will not be affected, when disconnecting the cables on rib No.1.

(c) Disconnect the turnbuckles of all flying control cables on the inboard face of rib No.1 and also remove the connecting pin from the portside rudder balance cable. Discard the split pin (item 21).

(d) In order to enable the flying control cables to be pulled through the gap in rib No.1, the pulleys are to be dismantled as follows:-

(i) Remove the pivot bolt from the forward aileron balance cable pulley and the two cable guards from the rear pulley.

(ii) Dismantle the trim cable pulley, which is located at the portside only.

(iii) Disconnect the forward lower pulley bracket assembly from rib No.1 and remove both cable guards from the aft lower pulley.

Notes: (a) The above operations will be clear when looking at the assembly.

(b) Discard the split pins (item 21) but retain all other parts.

(e) Pull the flying control cables through the hole in rib No.1.

(f) Firstly modify the portside rib No.1. Refer drawing A.12033 sheets 1 and 3. Carefully drill out the five (5) rivets, securing the attachment plates to rib No.1, which are in the way of the new sealing plate.

(g) Attach the three fairleads (items 4, 5 and 7) to the new sealing plate (item 10) using twelve (12) bolts (item 3), twelve (12) nuts (item 9) and twelve (12) washers (item 18).

(h) Remove the two corner bolts from the attachment plates and position the new sealing plate as indicated on the drawings.

(i) Mark off the position of the three holes in the flange of the sealing plate and drill 3 corresponding No.26 holes in the flange of rib No.1.

(j) Assemble the three of the flange using

(k) Then attach the sea drawing using packi (item 2), three (3) eight (8) washers sub-paragraph (h), washers (item 19).

"Note. - If No.1 wing tanks are in pos necessary to drain them, remove rank d and starboard tanks, before carrying o operations. To avoid doing this, riv used in lieu of bolts, item 1, nuts, i item 17.

The three holes in the flange are to be opened up with a No.21 drill corresponding holes in the false spar be taken not to touch the fuel tanks".

(l) Locate the circular hole in rib No.1 just aft of the new sealing plate. Position the two new blanking plates (items 13 and 14) as indicated. Spot through five (5) No.41 holes and three (3) No.26 holes and secure the blanking plates to rib No.1 using five (5) rivets (item 16) and three (3) bolts, nuts and washers (items 1, 9 and 18).

(m) Refer drawing A.12033, sheet 2 and modify the starboard side in a way similar to the procedure adopted for the portside. Note that only two fairleads are required and that one circular blanking plate is used to cover the hole in the rear portion of rib No.1.

(n) Having completed the above operations, lead each cable through its appropriate fairlead hole, reassemble the pulleys and connect up the turnbuckles, using the new split pins (item 20-.

(o) Retension the flying control cables adopting the method described in the Vampire Trainer Manual, Section 3, Chapter 4. Refer also sub-paragraph (b).

(p) Check the flying control cables.

(q) Replace the engine cowl.

(r) Record the modification in the Airframe Log Book.

Drawing

6. Drawing A.12033, Sheets 1, 2 and 3 are attached herewith,

Effect on Weight and Balance

7. The effect of the incorporation of this modification on the weight and balance of the aircraft is negligible.

References	:	Files R.A.A.F. 9/84/242 - 150/4/8629 D.H. Aust. Mod. V.615 A.M. Mod. VAM.3198 L.M.C. Meeting No.37
Attachment	:	Drawing No. A.12033 Sheets 1 to 3.
Date of Issue	:	23rd October, 1953.

DO NOT SCALE

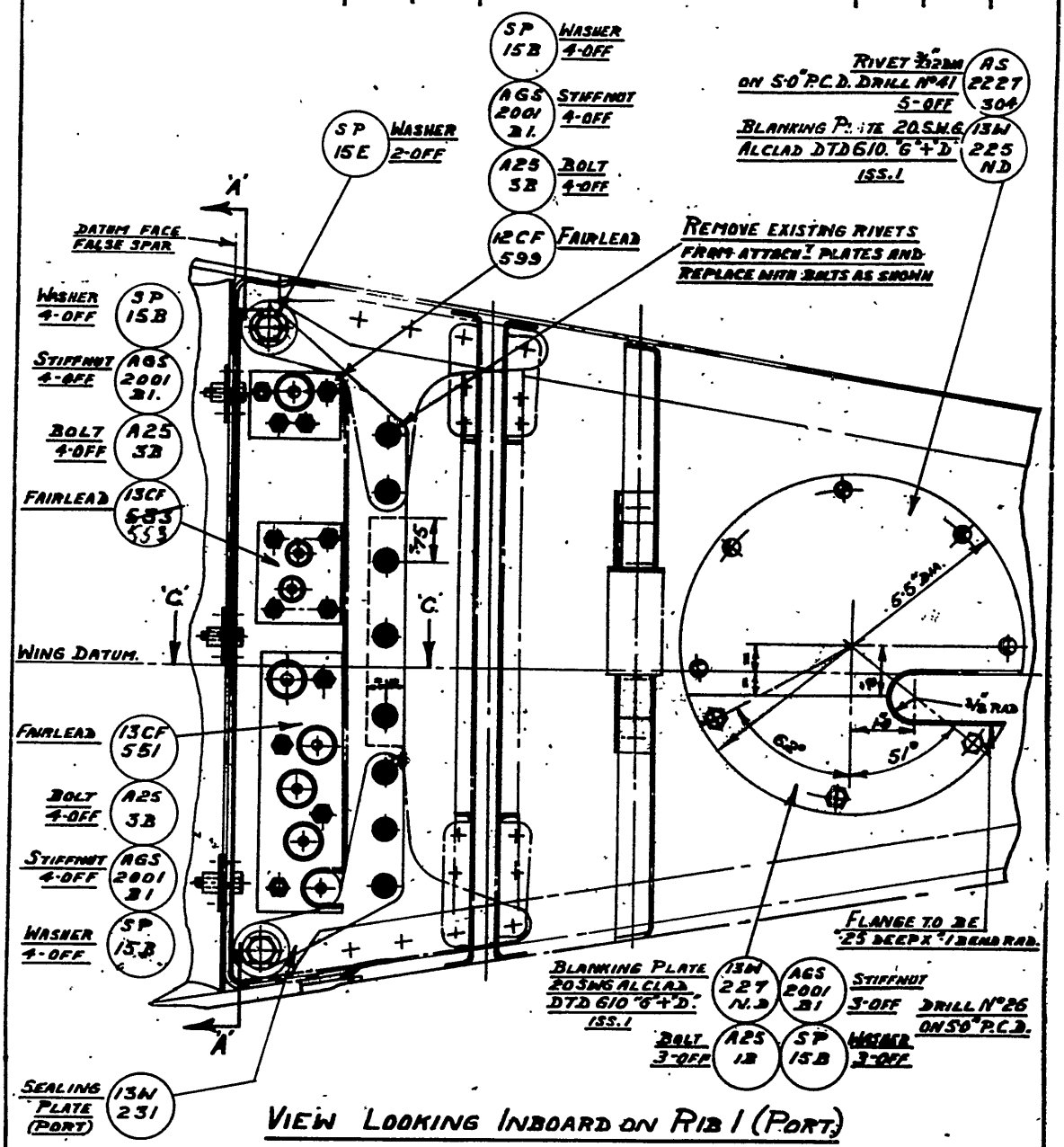

VIEW LOOKING INBOARD ON RIB 1 (PORT)

DE HAVILLAND DRG No 08M225 SHEET No 1. No OF SHEETS 3.

REFERENCE	ISSUED BY	TITLE
	DIRECTORATE OF TECHNICAL SERVICES R.A.A.F.	FIREPROOFING OF RIB No 1. INTRODUCTION.

LIMITS UNLESS STATED		MATERIAL		COMPONENT OF	FUSELAGE
DECIMALS	± .010"	SPEC.		MACHINE	VAMPIRE MK. 33
FRACTIONS	± 1/32"	TREATMENT		ENGINE	GOBLIN
ANGLES	± ½°	FINISH		TECH. ORDER	VAMPIRE MOD. No 88
SURFACE FINISH AUSTRALIAN STANDARD ENG. DRWG. PRACTICE A.S.E.21		SCALE		DRAWING NO.	A/12033
		DRAWN	APPROVED	DRWG. SIZE	A
		TRACED	CHECKED		

DO NOT SCALE

ISSUE NO.	DATE	ALTERATION	D. I. L.	INITIALS	APPROVED
2	7/9/54				

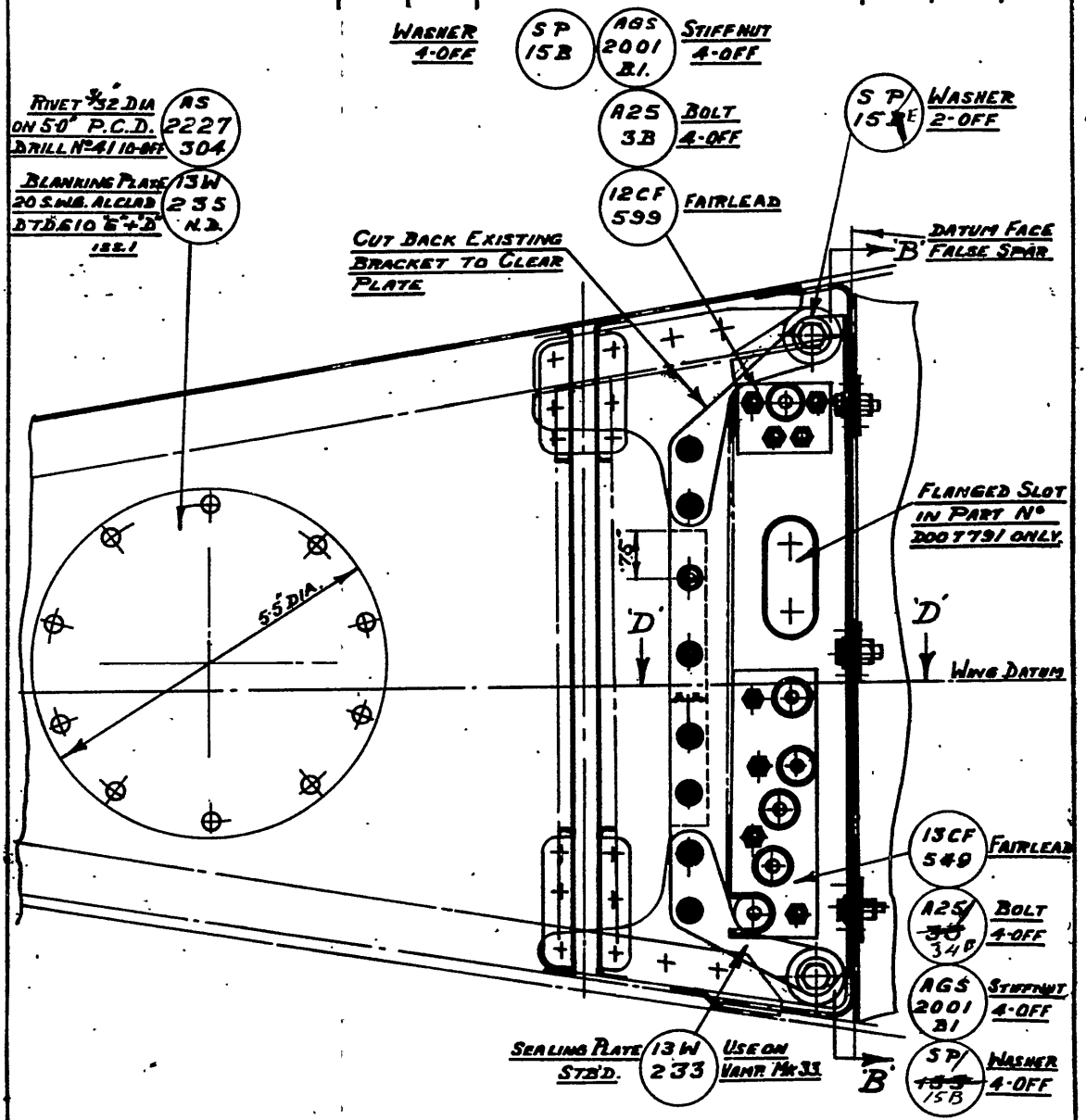

AL 22

AL 42

VIEW LOOKING INBOARD ON RIB 1 (STB'D)

De Havilland Dwg N°D0M285. Sheet N° 2 N° of Sheets 3

REFERENCE	ISSUED BY	TITLE
	DIRECTORATE OF TECHNICAL SERVICES R.A.A.F.	FIREPROOFING OF RIB N°1 INTRODUCTION

LIMITS UNLESS STATED		MATERIAL		COMPONENT OF	FUSELAGE
DECIMALS	± .010"	SPEC.		MACHINE	VAMPIRE MK. 33
FRACTIONS	± 1/32"	TREATMENT		ENGINE	GOBLIN
ANGLES	± ½°	FINISH		TECH. ORDER	VAMPIRE MOD. N°88
SURFACE FINISH AUSTRALIAN STANDARD ENG DWG. PRACTICE A.S.621		SCALE		DRAWING NO.	A12033
		DRAWN	APPROVED		DRWG. A SIZE
		TRACED	CHECKED		

DO NOT SCALE

ISSUE NO	DATE	ALTERATION	D. I. L	INITIALS	APPROVED
2 1	7/9/54				

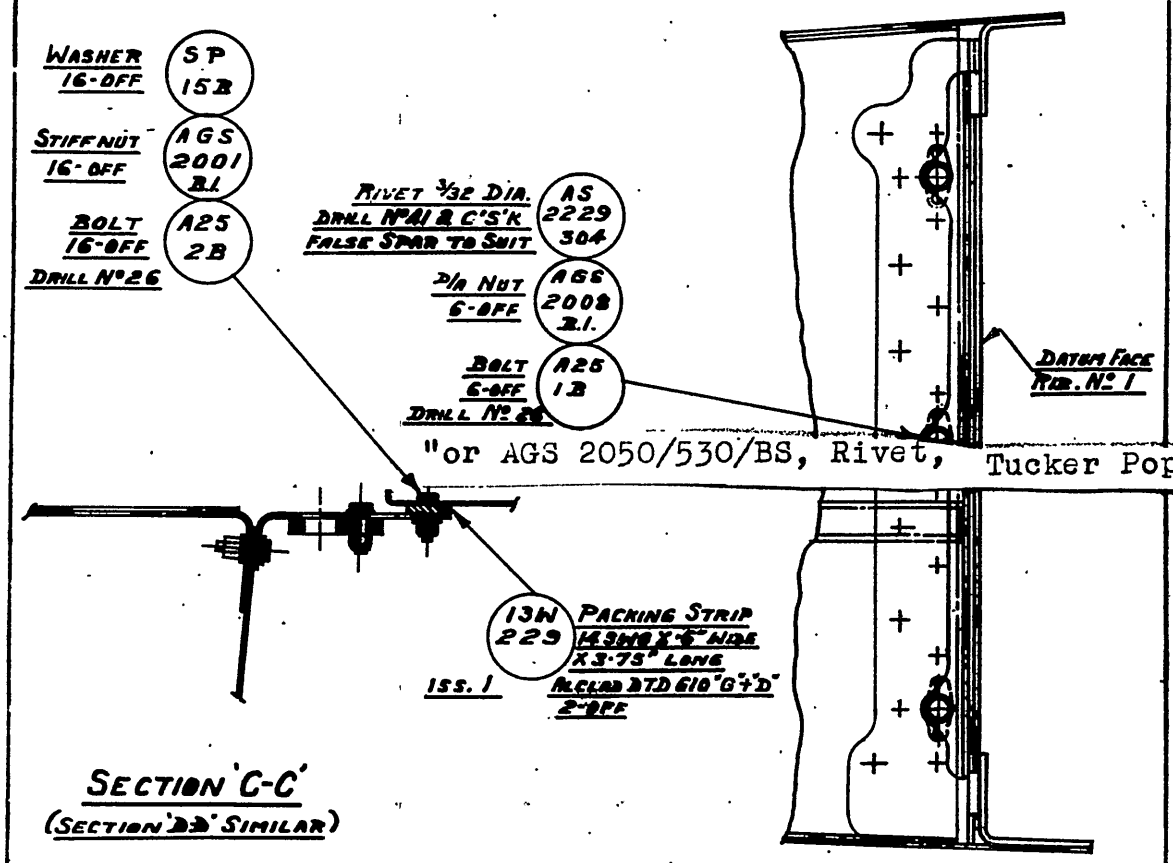

"or AGS 2050/530/BS, Rivet, Tucker Pop, 6 off "

DE HAVILLAND DRG. N° 60M225 SHEET N° 3. N° OF SHEETS 9.

REFERENCE	ISSUED BY	TITLE
	DIRECTORATE OF TECHNICAL SERVICES R.A.A.F.	FIREPROOFING OF RIB N° 1. INTRODUCTION.

LIMITS UNLESS STATED		MATERIAL		COMPONENT OF	FUSELAGE
DECIMALS	± .010"	SPEC.		MACHINE	VAMPIRE MK. 33.
FRACTIONS	± 1/32"	TREATMENT		ENGINE	GOBLIN
ANGLES	± ½°	FINISH		TECH. ORDER	VAMPIRE MOD. N° 86
SURFACE FINISH AUSTRALIAN STANDARD ENG. DRWG. PRACTICE A.S.621		SCALE		DRAWING NO.	A12033
		DRAWN	APPROVED		DRWG. A SIZE
		TRACED	CHECKED		

Restricted

Air Force Head-Quarters

Technical Order

VAMPIRE MODIFICATION NO.89

Application: Mk.33 (see para.2a)

Classification: Class 2

LEVELLING BLOCKS IN FUSELAGE NOSE - INTRODUCTION

Introduction

1. This modification authorises the introduction of additional fuselage levelling points for armourers' checks and wing incidence checks, as the existing production levelling blocks are inaccessible after the completion of manufacture.

General

2. (a) This modification is applicable to Vampire Mk.33 aircraft not incorporating the approved equivalent modification, De Havilland (Aust.) modification V622.

(b) This modification is to be incorporated as follows:

(i) Aircraft in use : Not later than the next minor inspection after receipt of modification sets.

(ii) Aircraft undergoing repair and inspection : During such repair or inspection.

(c) No special tools will be required.

(d) Man-hours : Approximately sixteen (16) man-hours per aircraft.

(e) The trade mustering responsible for the incorporation of this modification is airframe fitter.

Supply

3. The following parts will be required to complete one modification set:-

Item No.	Ident. No.	Part No.	Nomenclature	No. off per A/C	Stores Class.
1		15FS1675MD	Block, levelling, longitudinal	2	
2		15FS1673MD	Block, levelling, lateral	2	
3	H28C/2213	AGS250/59	Woodscrew No.8 x 1¼" long csk.brass	4	

(d) Record the modification in the Airframe Log Book.

Drawings

6. Drawing A12037 is attached herewith.

Effect on Weight and Balance

7. The effect of the incorporation of thismodification on the weight and balance of the Aircraft is negligible.

References	:	Files R.A.A.F. 9/84/16 and 150/4/8630 L.M.C. Meeting No.38 D.H. Aust. Mod. V622 - A.M. Mod. Vam.3221
Attachment	:	Drawing A.12037
Date of Issue	:	6th November, 1953.

DO NOT SCALE

ISSUE NO.	DATE	ALTERATION	D.I.L.	INITIALS	APPROVED

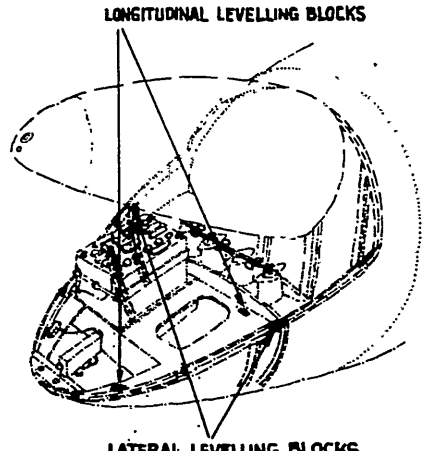

USE FORWARD FACE OF RIB PART Nº 15 FS 795-6 N.D. AS DATUM LINE WHEN MARKING OF POSITIONS OF LEVELLING BLOCKS

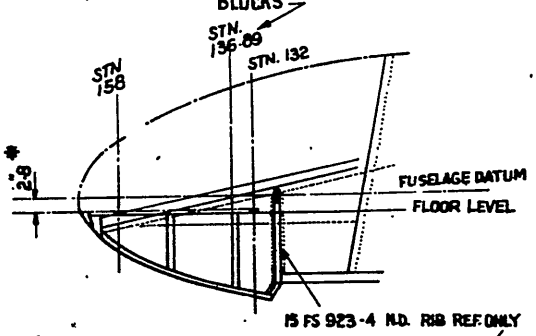

LOCATION OF LEVELLING BLOCKS IN NOSE

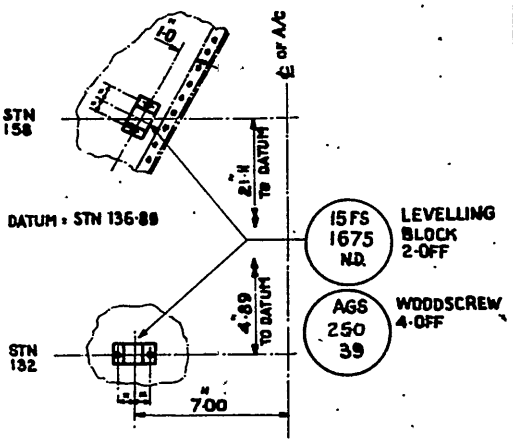

INSTALLATION OF LONGITUDINAL LEVELLING BLOCKS

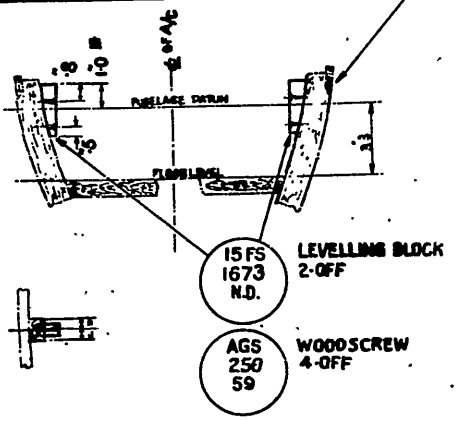

INSTALLATION OF LATERAL LEVELLING BLOCKS

* ALL DIMENSIONS TO LEVELLING BLOCK FACES MUST BE ± 0·005

ALL BLOCKS FINISHED WITH TROPIC PROOF LACQUER

DE HAVILLAND DRG. Nº 00M237 SHEET 1 OF SHEETS 1

REFERENCE	ISSUED BY	TITLE
	DIRECTORATE OF TECHNICAL SERVICES R.A.A.F.	LEVELLING BLOCKS IN FUSELAGE NOSE · INTRODUCTION

LIMITS UNLESS STATED		MATERIAL		COMPONENT OF	FUSELAGE
DECIMALS	± .010"	SPEC.		MACHINE	VAMPIRE MK 33
FRACTIONS	± 1/32"	TREATMENT		ENGINE	GOBLIN
ANGLES	± ½°	FINISH		TECH. ORDER	VAMPIRE MOD. Nº 99
SURFACE FINISH AUSTRALIAN STANDARD ENG. DRWG. PRACTICE A.S.C.Z1.		SCALE		DRAWING NO.	A 12037
		DRAWN	APPROVED		DRWG. A SIZE
		TRACED	CHECKED		

B/62

Restricted

Air Force Head-Quarters

Technical Order

VAMPIRE MODIFICATION NO. 9(

Application: Vampire Mk.30
(see para.2(a

Classification: Class 2

FLAP HINGE ATTACHMENT BOLTS - POSITIVE LOCKING

Introduction

1. This modification introduces class 'A' locking on inner and outer flap hinge attachment bolts in accordance with Royal Australian Air Force Design requirements.

General

2. (a) This modification is applicable to Vampire Mk.30 aircraft not incorporating the approved equivalent modification, De Havilland (Aust.) modification V129.

(b) This modification is to be incorporated as follows:-

(i) Aircraft in use : Not later than the next minor inspection after receipt of modification sets.

(ii) Aircraft undergoing repair or inspection : During such repair or inspection.

(c) No special tools are required.

(d) Man-hours : Approximately forty (40) man-hours.

(e) The trade mustering responsibility for this modification is airframe fitter.

Supply

3. The following parts will be required to complete one modification set:-

Item No.	Ident. No.	Part No.	Nomenclature	No. off per A/c	Stores Class
1	H28/5316	A16Y/CP	Nut 2BA plain M.S.	16	
2	H28/745	A16Y/EC	Nut 1/4" B.S.F. Castle M.S.	8	
3	H28C/8516	AS470/C	Washer 2 BA L.A.	16	
4	H28B/5032	AGS784/3	Pin Split 1/16" x 1"	22	

Note: Items 1 to 4 will be drawn from unit stores.

Salvage

4. The following parts will be rendered redundant by the incorporation of this modification:-

Item No.	Ident. No.	Part No.	Nomenclature	No. off per A/C	Stores Class
5	H28/10328	C.T.1	Nut 2BA pinnacle thin M.S.	8	
6	H28/10290	E.P.1	Nut 1/4" B.S.F. Pinnacle M.S.	8	
7	H28B/5032	AGS784/3	Pin Split 1/16" x 1"	14	

Note: Items 5 to 7 will be disposed of in accordance with current authorised procedure.

Method of Incorporation

5. The following sequence of operations is the method of incorporating this modification:-

(a) Trestle the aircraft in accordance with Australian Air Publication 828 figure 9.

(b) Remove No.1 (inboard fuel tank) as described in A.A.P.828, Section 5 paragraph 153.

(c) Remove the flaps as per A.A.P.828 Section 5 paragraph 160.

(d) Rivet over the tails of the four bolts securing the outboard hinge of the outer flap to the false spar. For dollying purposes the head of these bolts are accessible through the hand hole in wheel well.

Note: For riveting operation, the tail of the bolt is to be shortened to within 1 to 1½ threads of nut.

(e) Remove one of the four pinnacle nuts (item 6) from the inboard hinge bracket of the outer flap and replace with castle nut (item 2). Tension and drill No.51 (.067 inch) and pin with item 4.

Carry out similar procedure on each of the remaining bolts.

Note: It may be necessary to mark some of the bolts back from the nut for drilling and drill on the bench, in which case the bolt may be withdrawn by operating from the No.1 tank bay through the lightening holes in rib 2.

(f) It will be found that the four 2 B.A. bolts securing eac of the inboard flap hinges to the flase spar have pinnacle nuts fitted. Discard each of these nuts (item 5) in turn, and fit new plain nuts (item 1) and washers (item 3). Cut bolts off short if necessary (as in paragraph 5(d)) and rivet over to lock.

(g) Carry out modification on opposite wing.

(h) Reassemble the flaps to wing reversing procedure detailed in paragraph 160 A.A.P. 828. Re-pin all nuts with the remainder of item 4.

(i) Re-charge hydraulic accumulator and check operation of flaps.

(j) Replace No.1 fuel tank.

(k) Remove trestles.

(l) Record modification in airframe log book.

Drawings

6. No drawing will be required.

Effect on Weight and Balance

7. The effect of the incorporation of this modification on the weight and balance of the aircraft is negligible.

References : Files R.A.A.F. 9/84/242 and 150/4/8631
D.H. Aust. Mod. V129
A.M. Mod. 930
L.M.C. Meeting No.26

Date of Issue : 6th November, 1953.

Restricted

Air Force Head-Quarters

Technical Order

VAMPIRE MODIFICATION NO. 91

Application: Mk.30 (see para.2a)

Classification: Class 2

VACUUM PIPE BEHIND INSTRUMENT PANEL - IMPROVED

Introduction

1. The flexible suction hoses leading to the vacuum relief valve and the blind flying panel in Vampire Mk.30 aircraft cause considerable loss in vacuum. This is because of the smallness of the hose bore and also because of the hoses being prone to develop kinks. This modification is designed to overcome these faults by the introduction of two new pipe assemblies which are capable of delivering a true vacuum of from $4\frac{1}{2}$ to 5 inches of mercury to the gyroscopic instruments.

General

2. (a) This modification is applicable to Vampire Mk.30 aircraft not incorporating the approved equivalent modification, De Havilland (Aust.) modification, V87 issue 1 and 3.

For the modification of aircraft A79-879, A79-333 and A79-704 which have been modified in accordance with issue 2 of this modification, see paragraph 5(c).

(b) This modification is to be incorporated as follows:-

(i) Aircraft in use	:	Not later than the next minor inspection after the receipt of modification sets.
(ii) Aircraft undergoing Repair and Inspection	:	During such Repair or Inspection.

(c) No special tools will be required.

(d) Man-hours : Approximately six (6) man-hours per aircraft plus testing.

(e) The trade mustering responsibility for this modification is instrument maker and airframe fitter.

Supply

3. The following parts will be required to complete one modification set:-

Item No	Ident. No.	Part No.	Nomenclature	No. off per A/c	Stores Class.
1		00Q85AND	Pipe Assy.	1	
2		00Q83ND	Hoses, 5/16" l/d x 27" long DTD. 373	1	
3		DHS.159/A/25	Hose, coupling, P.R.	1	
4	A79/501796	C0Q91AND	Pipe Assy.	1	C
5	H28/9706	AGS.1102/D	Union, Cone Type, Al.Alloy, 1/2" I.D. x 2.12" long	1	C
6		Q00208IND	Hose, 3/8" l/d x 18" long, DTD.373	1	C
7	I1/494		Wire, locking, copper, 22 SWG	AR	C
8	I1/1444		Wire, locking, soft iron, 20 SWG	AR	C

Notes: (a) Items 1 to 6 inclusive will be delivered from De Havilland Aircraft Pty. Ltd. to Sub-modification Section 2 Aircraft Depot which will issue these items on demand.

(b) Items 7 and 8 are to be drawn from unit store.

Salvage

4. The following parts will be rendered redundant by the incorporation of this modification:-

Item No.	Ident. No.	Part No.	Nomenclature	No. off per A/c	Stores Class.
9		Q00868ND	Hose, 3/8" l/d x 6" long, DTD.373	1	
10	A79/501063	Q002096A	Piece, "Tee"	1	C
11		00Q13ND	Hose, 5/16" l/d x 13" long, DTD.373	1	
12		00Q77ND	Hose, 5/16" l/d x 9" long, DTD.373	1	
13		00Q75ND	Sleeve, 6 mm. l/d x 8" long, nylex	2	
14	H28B/6856	AGS.948/A	Plug	1	
15	H28C/8225	AGS.1138/A	Washer	1	

Item No.	Ident. No.	Part No.	Nomenclature	No. off per A/c	Stores Class.
16	A79/501079	Q98196	Piece, "Tee"	1	C
17		R00633AND	Pipe, Assy.	2	
18	H28/5595	AGS.906/D	Olive	2	
19		Q002081	Hose, $\frac{3}{8}$" 1/d x 9" long DTD.373	2	
20		00Q83ND	Hose, 5/16" 1/d x 18" long, DTD.373	1	
21		00Q117ND	Hose, 5/16" 1/d x 18" long	1	

Notes: (a) Items 9, 11, 12, 14, 18, 19, 20 and 21 are to be examined and if serviceable, returned to store.

(b) Items 10, 16 and 17 are obsolete and to be disposed of in accordance with current authorised procedure.

(c) Items 13 and 15 to be discarded as being of no value.

Method of Incorporation

5. The following sequence of operations is the method for incorporating this modification:-

(a) Remove the detachable nose panel and open the door in the front armour.

(b) Disconnect the suction gauge hose from the "Tee" piece and the suction gauge by temporarily removing the suction gauge from the R.H. instrument panel and cutting the 22 SWG copper wire. Discard the hose (item 11) and the nylex sleeve (item 13) which secured the hose to the "Tee" piece.

(c) Disconnect the two pipes from the Vickers vacuum valve.

(d) Disconnect from the pipe line to the canopy seal cock, the hose which is also connected to the blind flying panel. Discard the sleeve (item 13).

(e) Temporarily disconnect the bolts holding the blind flying panel in position, and move the blind flying panel so that sufficient access can be obtained.

(f) Disconnect the hose from the starboard side of the blind flying panel "T" junction, which was previously disconnected from the pipes to the canopy seal cock (paragraph 5(d)). Discard the hose (item 12).

(g) Then remove and discard the hose, leading from the port end of the "Y" junction to the "T" piece (item 19). Also discard the "Tee" piece (item 10), the hose from the "Tee" piece to the pipe assembly previously disconnected from the vacuum valve (item 19) and the pipe assembly (item 17). Retain the three hose clips.

(h) Locate the "Tee" piece on the pipe run from the vacuum valve to the vacuum pump. Remove the "Tee" piece (items 14, 15, 16) together with the hose (item 9) and the pipe assembly (item 17).

(i) Refer drawing A.12034. Connect the cone union body (item 5) to the pipe run to the vacuum pump in lieu of the "Tee" piece.

(j) Connect pipe assembly (item 1) to the union body and to the outlet side of the vacuum valve.

(k) Loosely connect pipe assembly (item 4) to the inlet side of the valve.

(l) Connect the hose (item 2) to the starboard side of the blind flying panel "Y" junction and the hose (item 6 to the port side binding both with 22 SWG copper wire (item 7).

(m) Position and secure the blind flying panel (refer paragraph 5(e)) and connect the hose on the port side of the "Y" junction to the inlet pipe of the vacuum valve, using a hose clip retained in paragraph 5(g).

(n) Using hose (item 3) and the two other clips (retained in paragraph 5(g)), connect the pipe line from the canopy seal cock to the branch pipe on the inlet pipe of the vacuum valve.

Note: The pipe to the canopy seal cock may be bent sufficiently to facilitate the hose connection.

(o) Pull the hose on the starboard end of the "Y" junction through the cutout for the suction gauge in the instrument panel, bind to the suction gauge with 22 copper wire and replace the suction gauge.

(p) Lock all pipe connection using 20 SWG soft iron wire (item 8).

(q) Test the vacuum system in accordance with Australian Air Publication 828, Section 4, chapter 3, paragraph 136.

(r) Close the door in the front armour and fit the detachable nose panel.

(s) Record the modification in the airframe log book.

(t) On aircraft A79-879, A79-333 and A79-704, which have been modified in accordance with D.H. (Aust.) modification V.87, issue 2, this modification should be incorporated as follows:-

(i) Gain access to the pipes as described in the previous paragraphs.

(ii) Disconnect and discard the 18 inch long hose from the suction gauge and the branch pipe on the inlet pipe of the vacuum valve (item 20).

(iii) Disconnect and discard the 18 inch long hose from the starboard end of the "Y" junction and the pipe line to the canopy seal cock (item 21).

(iv) Fit hose (item 3) from the canopy seal cock pipe to the branch pipe as described in paragraph 5(n) and hose (item 2) from the suction gauge to the starboard end of the "Y" junction as detailed in paragraphs 5(i) and 5(o).

(v) Replace temporarily removed objects as described in previous paragraphs.

Drawings

6. Drawing No. A12034 is attached.

Effect on Weight and Balance

7. The effect of the incorporation of this modification on the weight and balance of the aircraft is negligible.

References	:	Files R.A.A.F. 9/84/203 and 150/4/8632 D.H. Aust. Mod. V.87, issues 1 - 3 A.M. Mod. VAM. 753 L.M.C. Meeting No. 16
Attachment	:	Drawing A.12034
Date of Issue	:	6th November, 1953.

DO NOT SCALE

ISSUE No.	DATE	ALTERATION	D. I. L	INITIALS	APPROVED
1					

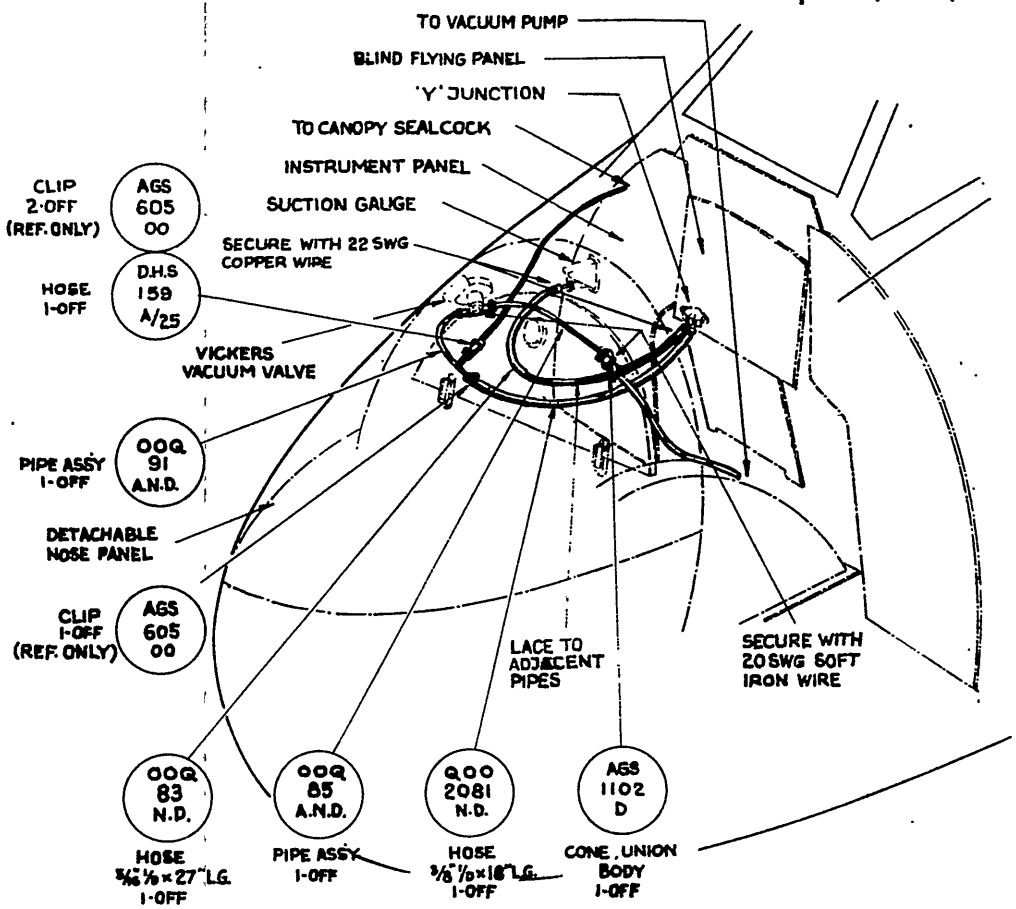

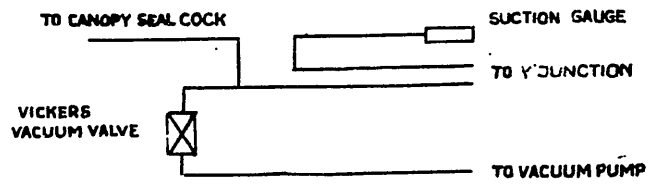

DIAGRAMMATIC LAYOUT

DE HAVILLAND DRG Nº 00M 170

REFERENCE	ISSUED BY	TITLE
	DIRECTORATE OF TECHNICAL SERVICES R.A.A.F.	NEW VACUUM PIPE WITH IMPROVED RUN - INTRODUCTION -

LIMITS UNLESS STATED		MATERIAL		COMPONENT OF	FUSELAGE
DECIMALS	± .010"	SPEC.		MACHINE	VAMPIRE MK 30
FRACTIONS	± 1/64"	TREATMENT		ENGINE	NENE 2VH
ANGLES	± ½°	FINISH		TECH. ORDER	VAMPIRE MOD. Nº 91
SURFACE FINISH AUSTRALIAN STANDARD ENG DRWG. PRACTICE A S.671		SCALE		DRAWING NO.	A12034 DRWG. A SIZE
		DRAWN	APPROVED		
		TRACED	CHECKED		

Air Force Head-Quarters

Technical Order

VAMPIRE MODIFICATION NO. 92

Application: Vampire Mk.30, 31 & 33, (see para.2a)

Classification: Class 2

NON-RETURN VALVE IN DROP TANK AIR TRANSFER LINE INTRODUCTION

Introduction

1. (a) This modification authorises the introduction of a non-return valve in the drop tank air transfer line to eliminate the possibility of fuel being drawn from the drop tanks and transferred into the cockpit pressurising line, while the cabin pressure is building up.

(b) The method of incorporation has been written in two parts, Viz:

Part 'A' - Modification of Vampire Fighter (Mk.30 and 31)

Part 'B' - Modification of Vampire Trainer (Mk.33)

The list of supply items is similar for both installations.

General

2. (a) This modification is applicable to Vampire Mk.30, 31 and 33 not incorporating the approved equivalent modification, De Havilland (Aust.) modification V.183.

(b) This modification is to be incorporated as follows:-

(i) Aircraft in use : Not later than the next major inspection after receipt of modification sets.

(ii) Aircraft undergoing repair and inspection. : During such repair or inspection.

(c) No special tools will be required.

(d) Man-hours: for Part 'A' - approximately eight (8) man-hours per aircraft

for Part 'B' - approximately four (4) man-hours per aircraft.

(e) The trade mustering responsible for the incorporation of this modification is airframe fitter.

Supply

3. The following parts will be required to complete one modification set:-

Item No.	Ident. No.	Part No.	Nomenclature	No. Off per A/c	Stores Class
1		N.1002 or P29A Mk2	Valve, N.R., Saunders or Valve, N.R., S.P.E.	2 or 2	
2		13.P.97	Adapter	2	
3	H28C/8215	AGS.1138/B	Washer-Jointing - Coupling pipe .52ID x .69 OD x .08T	4	
4	11/9715		Wire, locking, 22 SWG to spec. DTD.189 or	AR	
	11/2788		Wire, locking, 22 SWG.S.S. commercial	AR	

Notes: (a) Items 1 to 3 inclusive will be delivered from De Havilland Aircraft Pty. Ltd. to Sub-Modification Section, 2 Aircraft Depot, which will issue these items on demand.

(b) Item 4 is to be drawn from unit stores.

Salvage

4. No parts will be rendered redundant by the incorporation of this modification

Method of Incorporation

Part 'A' - Modification of Vampire Fighter

5. The following is the sequence of operations for incorporating this modification for Part 'A':-

(a) Remove the upper engine cowling panel to gain access to the engine mounting stays.

(b) Locate the Dunlop reducing valves in the drop tank fuel transfer air feed line, which are mounted on the engine mounting cross tubes (port and starboard).

(c) Break the locking wire and disconnect the two pipe assemblies running from the 'T' piece to the reducing valves at their valve-end.

(d) Refer drawing A12056 and assemble the new non-return valves (item 1), adapters (item 2) and washers (item 3) to the reducing valves as shown.

(e) Cut back the two pipe assemblies (refer paragraph 5(c)) to obtain the required lengths. Salvage the collars and outer sleeves and fit them to the new pipe ends using a standard belling tool. Connect up the pipe assemblies to the new non-return valves. After the Part Nos. of the pipes OOL91AND and OOL85AND to read OOL311AND and OOL315AND respectively.

Note: Thoroughly remove all metal filings before assembly.

(f) Wirelock the connections (item 4), replace the cowling panel and record the modification in the Airframe Log Book.

Part 'B' - Modification of Vampire Trainer

6. The following is the sequence of operation for incorporating the modification for Part 'B':-

(a) Open the upper engine inspection door to gain access to the engine mounting stays.

(b) Locate the Dunlop reducing valves in the drop tank fuel transfer air feed line which are mounted on the engine mounting cross tubes (port and starboard).

(c) Break the locking wire and disconnect the two high pressure hoses from the valves.

(d) Assemble the new non-return valves, the adapters and the washers (items 1, 2 and 3) to the valves as shown on drawing A12056.

(e) Reconnect the hoses and wirelock the connections (item 4).

(f) Close the engine inspection door and record the modification in the Airframe Log Book.

Drawings

7. Drawing A12056 is attached.

Effect on Weight and Balance

8. The effect of the incorporation of this modification on the weight and balance of the aircraft is negligible.

References : Files R.A.A.F. 9/84/146 and 150/4/8633
D.H. Aust. Mod. V.183
A.M. Mod. VAM.3253
L.M.C. Meeting No.41

Attachment : Drawing A.12056

Date of Issue : 16th December, 1953.

DO NOT SCALE

ISSUE NO | DATE 26-3-54

SCRAP VIEW ON ENGINE MOUNTING STARBOARD
(Port Side Similar but opposite hand)

PART 'B'
VAMPIRE TRAINER
(Mk. 33)

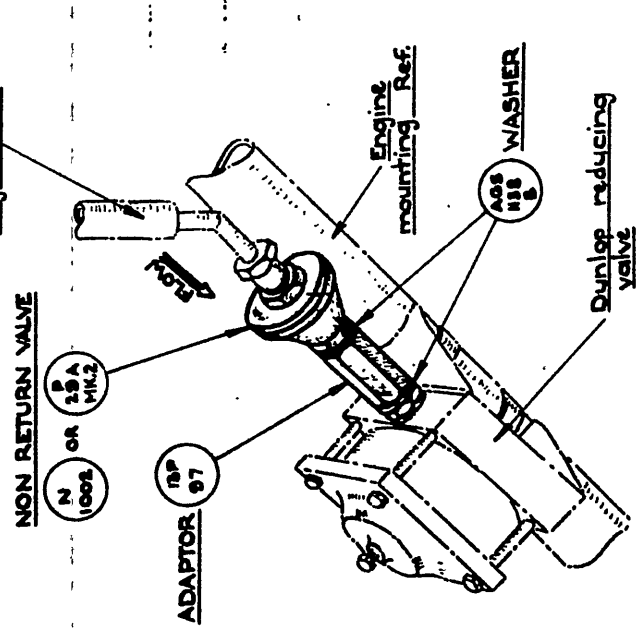

PART 'A'
VAMPIRE FIGHTER
(Mk. 30 + 31)

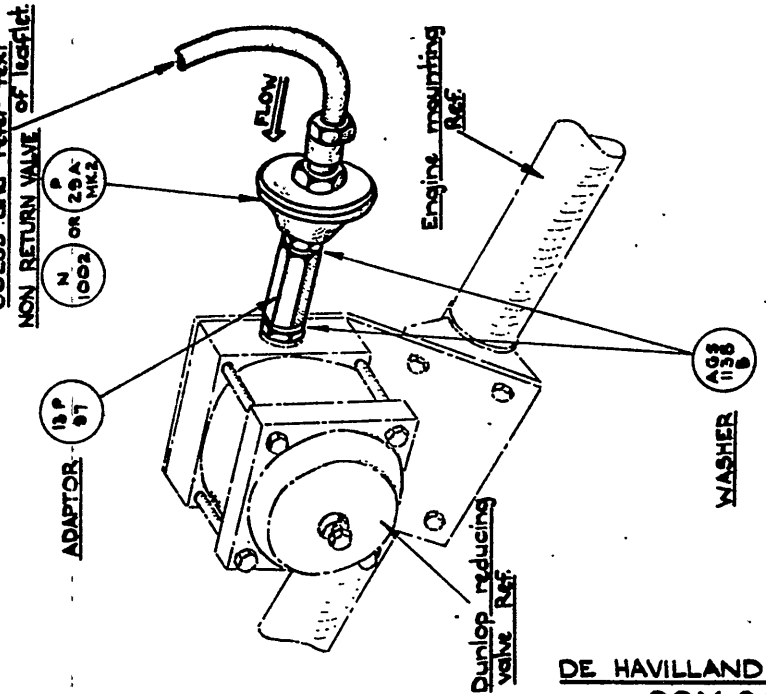

DE HAVILLAND DRG. Nº
OOM 246

REFERENCE	ISSUED BY
	DIRECTORATE OF TECHNICAL SERVICES. R.A.A.F.

NON-RETURN VALVE IN DROP TANK AIR TRANSFER LINE - INTRODUCT.

LIMITS UNLESS STATED		MATERIAL	
DECIMALS	± .010"	SPEC.	
FRACTIONS	± 1/32"	TREATMENT	
ANGLES	± ½°	FINISH	
SURFACE FINISH AUSTRALIAN STANDARD		SCALE	
		DRAWN	PROVED
		TRACED	B.L.S.

COMPONENT
ENGINE
FUEL SYSTEM
VAMPIRE MK. 30, 31 + 33
NENE - 2 V.H. + GOBLIN
VAMPIRE MOD. Nº 92

A-12056

Air Force Head-Quarters

Technical Order

VAMPIRE MODIFICATION NO. 93

Application: Mk.30 and 31 (See para. 2a)

Classification: Class 2.

RETRACTING MECHANISM MAIN UNDERCARRIAGE - REDESIGNED BOLTS

Introduction

1. (a) This modification authorises the introduction of a redesigned undercarriage jack top attachment bolt with a hexagon head in lieu of the existing bolt, which has two flat surfaces only. This will facilitate the removal of the jack by permitting the use of a spanner for removal of the bolt.

(b) This modification also authorises a decreased head thickness of the lower of the two bolts, securing the radius rod pick-up to the compression leg, as it has been found that this bolt fouls the undercarriage jack when in the "locked up" position. (Refer paragraphs 5(f) to 5(h)).

General

2. (a) This modification is applicable to the following Vampire Mk.30 and 31 aircraft:-

A79-1, 2, 484, 687, 973, 309, 170, 375, 24, 109, 762, 876, 153, 18, 263, 529, 737, 796, 89, 650, 321, 14, 165, 942, 872, 333, 704, 862, 115, 76, 202, 60, 985 and 520 on the port side only. A79-550, 901, 5, 674, 390, 215 and 564 on the starboard side only. All other aircraft will be modified by the manufacturer. The approved equivalent modification is De Havilland (Aust.) V.136.

(b) This modification is to be incorporated as follows:-

(i) Aircraft in use	:	In conjunction with Vampire modification No.72, or at next major inspection after receipt of modification sets.
(ii) Aircraft undergoing repair and inspection	:	In conjunction with Vampire modification No.72, or during such repair or inspection.

Note: It is advisable to combine the incorporation of this modification with the incorporation of modification No.72 in which the removal of the hydraulic jack offers the possibility of replacement of the jack top attachment bolt.

(c) No special tools are required.

(d) Man-hours : Approximately thirty (30) man-hours per aircraft.

(e) The trade mustering responsibility for the incorporation of this modification is airframe fitter.

Supply

3. The following parts will be required to complete one modification set:-

Item No.	Ident. No.	Part No.	Nomenclature	No. off per A/c	Stores Class
1	A79/502022	G001765ND	Shim, brass	2	
2	A79/502010	G001901	Bolt, special	2	
3		A58/ES	Nut B.S.F. 1/4" H.T.S. thin	2	
4	H28B/5031	AGS.784/2	Pin, split, 1/16" x 3/4" long	2	
5	H28B/5032	AGS.784/3	Pin, split, 1/16" x 1" long.	2	

Notes: (a) Items 1 to 3 inclusive will be delivered from the Commonwealth Aircraft Corporation to Sub-modification Section 2 Aircraft Depot which will issue these items on demand.

(b) Items 4 and 5 will be drawn from unit store.

Salvage

4. The following parts will be rendered redundant by the incorporation of this modification:-

Item No.	Ident. No.	Part No.	Nomenclature	No. off per A/c	Stores Class
6		G0050	Bolt, special	2	
7		G00662ND	Washer, brass	2	

Notes: (a) Item 7 is to be disposed of in accordance with current authorised procedure.

(b) Item 6 is to be examined and, if serviceable, to be returned to stock.

Method of Incorporation

5. The following sequence of operations is the method for incorporating this modification:-

(a) Trestle the aircraft in accordance with Australian Air Publication 828, Figure 9. Release the hydraulic pressure from the accumulator with the main wheels down.

(b) Temporarily unclip the two hydraulic hoses from the diaphragm in order to provide access, and then remove the top jack attachment bolt.

(c) Disconnect the grease nipple from the bolt and fit this grease nipple to the new bolt (item 2) using a brass shim (item 1) instead of the original brass washer (item 7).

(d) Then fit the new bolt using the original washer and a new nut (item 3). Lock the nut with a new split pin (item 4).

Note: Care is to be taken that after fitting the bolt, the grease nipple is pointed downwards.

(e) Refit the clip removed in paragraph 5(b).

(f) Disconnect the lower of the two bolts securing the radius rod pick-up to the compression leg. Retain all attachments.

(g) Refer drawing A.12044 and cut back the thickness of the head of the bolt (paragraph 5(f)) from .13 inch to .1 inch.

(h) Replace the bolt and lock the nut with a new split pin (item 5).

(i) After modification of the port and starboard units, inflate the hydraulic accumulator, retract the undercarriage and check for correct functioning.

(j) Remove the trestles.

(k) Record the modification in the Airframe Log Book and on the wing modification plate.

Drawings

6. Drawing A.12044 is attached.

Effect on Weight and Balance

7. The effect of the incorporation of this modification on the weight and balance of the aircraft is negligible.

References : Files R.A.A.F.9/84/91 and 150/4/8634
D.H. Aust. Mod. V.136
A.M. Mod. VAM. 900
L.M.C. Meeting No. 26

Attachment : Drawing A.12044

Date of Issue : 6th November, 1953.

DO NOT SCALE

ISSUE NO	DATE	ALTERATION	D. I. L.	INITIALS	APPROVED

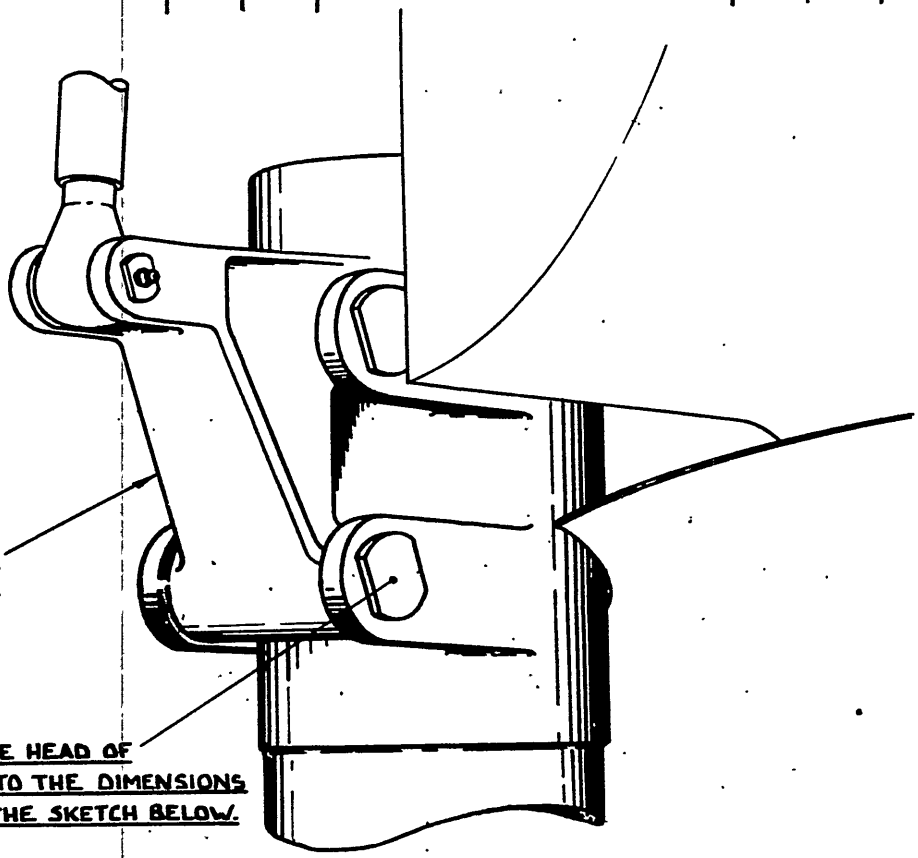

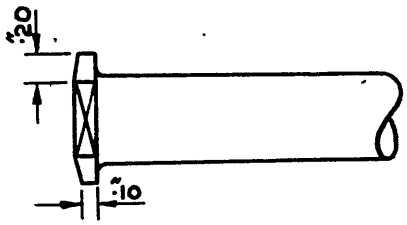

AFTER MODIFICATION, PROTECT HEAD OF BOLT WITH PRIMER & CELLULOSE FINISH (ALUMINIUM)

REFERENCE		ISSUED BY				TITLE		
		DIRECTORATE OF TECHNICAL SERVICES R.A.A.F.				RETRACTING MECHANISM MAIN UNDERCARRIAGE REDESIGNED BOLTS		
LIMITS UNLESS STATED		MATERIAL				COMPONENT OF	UNDERCARRIAGE	
DECIMALS	± .010"	SPEC.				MACHINE	VAMPIRE MK. 30 & 34	
FRACTIONS	± 1/32"	TREATMENT				ENGINE	NIL	
ANGLES	± ½°	FINISH				TECH. ORDER	VAMPIRE MOD. Nº 93	
SURFACE FINISH AUSTRALIAN STANDARD ENG DRWG. PRACTICE A.S.E.21		SCALE				DRAWING NO.	A12044	DRWG. A SIZE
		DRAWN		APPROVED				
		TRACED		CHECKED				

Air Force Head-Quarters

VAMPIRE MODIFICATION NO. 94

Technical Order

Classification: Class 2

K.L.G. CONNECTOR TYPE B2571-EA-90 - INTRODUCTION

Reason for and Description of Modification

1. This modification introduces the K.L.G. connector type B2571-EA-90 in lieu of the type [illegible]90/9M, which is now obsolete and no longer available to the Service.

Application

2. This modification is to be incorporated on aircraft De Havilland, serial numbers 4001 to 4074 inclusive. Subsequent aircraft will be modified by the manufacturer.

Responsibility for Incorporation

3. This work is to be carried out at unit level by electrical personnel.

Action in Respect of Spares
Orders Superseded or Cancelled } Not applicable.

Equivalent Modifications

4. De Havilland (Aust.) modification V169 is the equivalent modification.

Supply

5. The following part will be required to complete one modification set:-

Item No.	Ident. No.	Part No.	Nomenclature	No. Off	Class
1	A79/502094	00N349A	Cable assembly, H.T. boost coil to plug	2	C

Note: Item No.1 is to be drawn from unit store as required in paragraph 8.

Disposal of Parts Removed

6. The following parts are rendered redundant by the incorporation of this modification:-

Item No.	Ident. No.	Part No.	Nomenclature	No. off	Class
2		N00937A	Cable assembly, H.T. boost coil to plug, port	1	C
3		N00938A	Cable assembly, H.T. boost coil to plug, starboard	1	C

Note: Items Nos. 2 and 3 will be of no further service value and are to be disposed of in accordance with current authorised procedure.

Disposal of Parts in Stock

7. Not applicable.

When the Modification is to be Incorporated

8. This modification is to be incorporated ~~not later than the next major servicing period on~~ whenever the existing cable assemblies require replacement. AL-14

Method of Incorporation

9. (a) Man-hours Involved : Approximately four (4) man-hours per aircraft.

(b) Special Tools, Jigs &c. : No special tools are required.

(c) Sequence of Operations :

(i) Disconnect the cables (items 2 and 3) leading from the booster coil to the igniter plugs on the port and starboard sides respectively.

(ii) Discard both cables as in paragraph 6.

(iii) Fit the two new cables (item 1) in lieu.

(d) Tests : Functionally test for serviceability.

(e) Recording : Record the modification in the Form E/E.77 and also the Airframe Log Book.

Drawings

10. Not applicable.

Effect on Weight and Balance

11. The effect of the incorporation of this modification on the weight and balance of the aircraft is negligible.

References : Files R.A.A.F. 150/4/8621 and 150/4/8635.

Date of Issue : 16th December, 1953.

Restricted

Air Force Head-Quarters

Technical Order

VAMPIRE MODIFICATION NO.95

Classification: Class 2

40 A.H. ACCUMULATORS - INTRODUCTION

Reason for and Description of Modification

1. The present accumulators fitted to the Mk.33 Vampire have proved to have insufficient capacity, and are to be replaced by accumulators of greater capacity.

Application

2. This modification is to be incorporated on aircraft De Havilland, Serial Nos. 4081 to 4091 inclusive. Subsequent aircraft will be modified by the manufacturer.

Responsibility for Incorporation

3. This modification is to be carried out at unit level by electrical fitters.

Action in Respect of Spares

4. Not applicable.

Orders Superseded or Cancelled

5. Not applicable.

Equivalent Modifications

6. De Havilland (Aust.) modification V.640 is the equivalent modification.

Supply

7. The following parts will be required to complete one modification set:-

Item No.	Ident. No.	Part No.	Nomenclature	No. Off	Class
1	05A/3253	-	Accumulators, type "C" 40 A.H.	2	A
2	05A/3011	-	Plate, locking, accumulators.	4	C

Note: Item No.1 will be demanded from unit stores, item No.2 will be delivered from D.A.P. to sub-modification section, who will automatically issue these items to user units.

Disposal of Parts Removed

8. The following parts will be rendered redundant by the incorporation of this modification:-

Item No.	Ident. No.	Part No.	Nomenclature	No. Off	Class
3	G5A/3254	-	Accumulator type "C" 25 A.H.	2	A
4	G5A/3010	-	Plate, locking, Accumulator	4	C

Note: Item 3 is to be conditioned, and if serviceable retained for use in Mk.30 or Mk.31 Vampires. Item No.4 is to be conditioned and returned to unit store.

Disposal of Parts in Stock

9. Not applicable.

When the Modification is to be Incorporated

10. This modification is to be carried out not later than the first minor servicing period after receipt of parts.

Method of Incorporation

11. (a) Man-hours Involved : Approximately six (6) man-hours per aircraft.

(b) Special Tools, Jigs &c. : No special tools are required.

(c) Sequence of Operations

(i) Disconnect the two accumulators, item 3 from the aircraft circuit, remove the four (4) locking plates and the two accumulators - items 3 and 4.

(ii) Cut off the four (4) studs to which the locking plates were attached just above the filler weld securing the bolt plate to the stud, but ensure that the height of the remaining part does not exceed the thickness of the packing on the accumulator tray, to prevent fouling of the new batteries. Apply paint Anti-sulphuric to protect the stud ends.

(iii) Place the two accumulators (item 1) on the accumulator tray and secure them in position with the new locking plates (item 2) and the original spring washers and wing nuts, picking up on the existing bolts at the forward and rear edges of the tray.

(iv) Connect the accumulators into the aircraft circuit and functionally check for serviceability.

(v) Locate and remove the 60 lb. ballast weight Part No.F15-33ND from its two supporting brackets at the forward end of the nose compartment.

(vi) Refer to drawing No. A.12043 and make up the two new ballast weights part No.F15-53ND, L.H. and part No.F15-54ND, R.H. Counter bore each block to obtain the correct weight of $15\frac{3}{4}$ lbs. ± 4 ozs.

(vii) Assemble the two weights to the existing supporting brackets using the original bolts and nuts.

(d) Tests : See sub-para. C(iv) above.

Drawings

12. Drawing No. A.12043 is attached.

Effect on Weight and Balance

13. The effect of the incorporation of this modification on the weight and balance of the aircraft is as follows:-

Item	Weight ± (lb)	Arm ± (in)	Moment ±
Accumulator 25 A.H. (2 off)	-.74.0	- 140.25	+ 10,378.5
" 40 A.H. (2 off)	+106.0	- 140.25	- 14,866.5
Ballast Weight (F15-33ND)	- 60	- 156.0	+ 9,360.0
" " (F15-53-4ND)	+ 31.5	- 155.3	- 4,892.0
Total	+ 3.5		- 20.0

References : File R.A.A.F. 150/4/8621 and 150/4/8636
D.H. (Aust.) Mod. V640
D.H. (Aust.) I.L. 244
L.M.C. Meeting No.42

Attachment : Drawing A.12043

Date of Issue : 8th December, 1953.

DO NOT SCALE

ISSUE NO	DATE	ALTERATION	D.T.S.	INITIALS

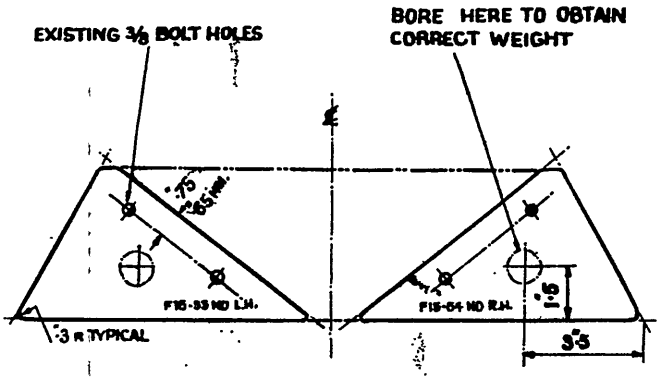

EXISTING BALLAST WEIGHT F15-33 N.D. (60 LB)
TO BE CUT AS SHOWN TO MAKE TWO WEIGHTS
EACH COMPRISING 15 3/4 LB ± 4 oz.

RE PART NUMBER TO F15-53 N.D. L.H
& F15-54 N.D. R.H

NOTE: DIMENSIONS GIVEN APPROXIMATE.
FINISHED SIZE MUST GIVE WEIGHT QUOTED

DE HAVILLAND DRG Nº 00M244

REFERENCE		TITLE
	DIRECTORATE OF TECHNICAL SERVICES R.A.A.F.	40 AMP. HOURS ACCUMULATORS -INTRODUCTION-

UNITS UNLESS STATED	MATERIAL		COMPONENT OF
	SPEC.		MACHINE
	TREATMENT		ENGINE
	FINISH		TECH. ORDER: VAMPIRE MOD. Nº 95
	SCALE		
		APPROVED	
		CHECKED	

A-12043

Restricted

Air Force Head-Quarters — VAMPIRE MODIFICATION NO.96

Technical Order — Classification: Class 2.

LINK IN MANUAL RELEASE MECHANISM - INTRODUCTION

Reason for and Description of Modification:-

1. This modification calls for the introduction of a link, designed to prevent the inadvertent release of bomb carriers or drop tanks.

Bomb carriers have been inadvertently released from some aircraft due to the teleflex connector fouling the belled end of the guide tube D004214ND (see attached drawing A12059).

Application

2. This modification is to be carried out on Mk.30, 31 and 33 Vampire aircraft which have not had the manufacturer's modification V.188 incorporated.

Responsibility for Incorporation

3. Units holding relevant aircraft are responsible for the incorporation of this modification. The trade mustering responsible for the incorporation of this modification is airframe fitter.

Action in Respect of Spares

4. Units are to ensure that this modification is incorporated on spare wings before fitment to aircraft. For supply of parts, see paragraph 7. AL 15

Orders Superseded or Cancelled

5. No orders are superseded or cancelled by this modification.

Equivalent Modifications

6. De Havilland (Aust.) modification V.188 is the manufacturer's equivalent modification.

Supply

7. The following parts are required to complete one modification set:-

Item No.	Ident. No.	Part No.	Nomenclature	No. Off Per Set	Stores Class
1		OOD1381A	Link assy.	2	
2	H28B/811	SP4Y-A1	Pin, shackle, steel, 5/32" dia. x .25" long	2	
			or		
	H28B/812	SP4Y-A2	Pin, shackle, steel, 5/32" dia. x .30" long		
3	H28B/5032	SP9-08	Pin, split, nickel alloy, 1/16" dia. x 1" long	4	
4	T27K/505	B10140	Tab washers, Teleflex (M.R.C.)	2	

Note: Item 1 is to be made up in unit workshops. Items 2, 3 and 4 are to be drawn from unit stores.

Disposal of Parts Removed

8. No parts will be rendered redundant by the incorporation of this modification.

Disposal of Parts in Stock

9. Not applicable.

When the Modification is to be incorporated

10. This modification is to be incorporated as soon as practicable, but in any case, before drop tanks or bomb carriers are fitted to serviceable aircraft.

Method of Incorporation

11. (a) Man-hours Involved : Approximately twelve (12) man-hours will be required to incorporate this modification.

(b) Special Tools, Jigs, &c. : None are required.

(c) Sequence of Operations :

(i) Refer to drawing A12059 attached and remove the access panel, located at nose rib 6, from the underside of the wing.

(ii) Remove the access panel, located between nose ribs 1B and 2. This panel is in the bottom skin for Mks. 30 and 31 and in the top skin for Mk. 33 aircraft.

(iii) Disconnect the 3 cwt. cable from the slip release lever, located on the inboard face of nose rib 6.

(iv) Connect a link (item 1) to the lever with shackle and split pins (items 2 and 3), using the hole left redundant.

(v) Connect the 3 cwt. cable to the link, using existing shackle pin and new split pin (item 3).

(vi) Remove teleflex cable end from teleflex connector, located between nose ribs 1B and 2 and remove the lock spring.

(vii) Cut 1.0 inch off the end of the teleflex cable and replace lock spring.

(viii) Re-connect the teleflex cable to the teleflex connector and lock with new tab washer (item 4). Refer Aircraft Engineering Instruction General 7/1/7.

(ix) Re-rig cables in compliance with D.T.S. Special Instruction Vampire/40.

(x) Ensure that the 1/4 inch minimum gap called for on A12059 is obtained.

(xi) Replace both access panels.

(xii) Paragraphs (i) to (xi) inclusive apply to both port and starboard wings.

(d) Tests : Test for correct operation in accordance with D.T.S. Special Instruction Vampire/40.

(e) Recording : Record the modification in the Airframe Log Book, the form A/E.77 and on the wing modification plates (both port and starboard).

Drawings

12. Drawing A12059 is attached.

Effect on Weight and Balance

13. The effect of the incorporation of this modification on weight and balance is negligible.

Reference : Files R.A.A.F. 9/84/146 and 150/4/8647
De Hav. (Aust.) Mod. V.188
Defect Report 2(F) O.T.U. W47/53.

Attachment : Drawing A.12059.

Date of Issue : 16th December, 1953.

DE HAVILLAND DRG. Nº OOM 259

DIRECTORATE OF TECHNICAL SERVICES
R.A.A.F.

LINK IN MANUAL RELEASE MECHANISM - INTRODUCTION -

DROP TANKS

VAMPIRE MK. 30, 31, 33.

VAMPIRE MOD. 96

A-12059

7536

Air Force Head-Quarters — VAMPIRE MODIFICATION NO.97

Technical Order — Classification: Class 2.

PROVISION FOR OVERBOARD JET PIPE DRAIN PIPE - INTRODUCTION

Reason for and Description of Modification

1. This modification authorises the introduction of a drain hole and fairing in the rear engine cone to make provision for the new jet pipe drain pipe, which is introduced by D.H. Goblin Modification 903, and so prevents the risk of fire by the relighting of trapped fuel in the cowling.

Consequently this modification is to be carried out either prior to or concurrently with D.H. Goblin Modification 903.

Application

2. This modification is applicable to Vampire Mk.33 aircraft not incorporating the approved equivalent modification, De Havilland Modification V.638.

Responsibility for Incorporation

3. Unit holding relevant aircraft are responsible for the incorporation of this modification. The trade mustering responsible for the incorporation of this modification is airframe fitter.

Action in Respect of Spares

4. Not applicable.

Orders Superseded or Cancelled

5. Not applicable.

Equivalent Modifications

6. The equivalent modification is De Havilland (Aust.) Modification V.638.

Supply

7. The following parts are required to complete one modification set:-

Item No.	Ident. No.	Part No.	Nomenclature	No. Off per Set	Stores Class
1		12.EC.815	Fairing	1	
2		L003759	Plate, Reinforcing	1	
3	H128F/63365	AS2229/404	Rivet, $\frac{1}{8}$" dia. x $\frac{1}{4}$" lg. C.S.K. 90° Al.Alloy	17	
4	H128F/62509	AS2229/405	Rivet $\frac{1}{8}$" dia. x 5/16" lg. C.S.K. 90° Al.Alloy	6	

Item No.	Ident. No.	Part No.	Nomenclature	No. Off per Set	Stores Class
5	H128F/5725	AS2230/405	Rivet $\frac{1}{8}$" dia. x 5/16" lg. C.S.K. 120° Al.Alloy	4	
6	H128F/5735	AS2230/406	Rivet $\frac{1}{8}$" dia. x $\frac{3}{8}$" lg. C.S.K. 120° Al.Alloy.	4	
7		AGS2048/423 BH	Rivet $\frac{1}{8}$" dia. x .23" lg. domed head tucker pop, all, break head	9	
8		AGS2049/414 BH	Rivet $\frac{1}{8}$" x .14" lg. C.S.K. hd. tucker pop All, break head	3	
9	I1/2188		Wire, Locking 22 SWG Nickel Alloy	AR	
10	K3/353		Jointing compound to Spec. DTD.369A	AR	
11	K3/365		Dopes - Cellulose Finishing aluminium Spec.DTD 772	AR	
12	K3/175		Primer-Zinc Chromate SAA INT.28	AR	

Note: Items 1 to 8 inclusive are to be delivered from De Havilland Aircraft Pty.Ltd., to Sub-modification Section, No.2 Aircraft Depot which is to issue these items on demand. Items 9 to 12 inclusive are to be drawn from unit stores.

Disposal of Parts Removed

8. The following parts are redundant:-

Item No.	Ident. No.	Part No.	Nomenclature	No. Off per set	Stores Class
13	H128F/30236	AGS2229/404	Rivet, $\frac{1}{8}$" dia. x $\frac{1}{4}$" lg. C.S.K. 90°, All.	6	

Note: Item 13 is to be disposed of in accordance with the authorised current procedure.

Disposal of Parts in Stock

9. Not applicable.

When Modification is to be Incorporated

10. This modification is to be incorporated at next minor inspection, or before fitment of engine with D.H. Goblin Modification No. 903.

Method of Incorporation

11. (a) Man-hours Involved : Approximately ten (10) man-hours will be required to incorporate this modification

(b) Special Tools, Jigs, &c. : Nil.

(c) Sequence of Operations :

(i) Remove the rear cone from the aircraft in accordance with current authorised procedure.

(ii) Mark out the bottom centre-line both internally and externally. Refer to drawing A.12072 and cut back the bottom centre stiffener to permit the fitment of the new reinforcing plate (item 2).

(iii) Carefully drill out the six rivets (item 13) through the flanges of the forward ring and the outer skin, which are in the way of the reinforcing plate.

(iv) Position the plate, mark off and drill six No.30 holes in the plate to line up with the six rivet holes, cleared in operation iii.

(v) Temporarily attach the reinforcing plate by means of skin pins and then scribe the profile of the drain hole on to the skin and forward ring.

(vi) Locally remove the external finish and offer up the new fairing (item 1).

(vii) Carry out all the drilling and countersinking detailed on the drawing and scribe the profile of the cut-out in the fairing on to the external face of the cone skin.

(viii) Remove the plate and fairing and drill a series of holes within the periphery of the lines scribed in operations v and vii. File and cut out to suit the scribed shape and slightly radius its edges. Deburr all holes.

(ix) Apply jointing compound (item 10) to the mating surfaces of the fairing, the skin, the forward ring and the reinforcing plate.

(x) Rivet up in accordance with drawing A.12072 (items 3, 4, 5, 6, 7 and 8).

Note: The two rivets which are to be located on the forward flange of the front ring, on either side of the cone centre-line, are to be riveted before the fitment of the fairing.

(xi) Repair the finish both internally and externally to match the existing colour scheme (items 11 and 12).

(xii) Alter the Part No. of the rear cone L00853A/1 to read L00853A/2. Replace the cone on the aircraft.

Note: If D.H. Goblin Modification 903 is being incorporated concurrently, it will be necessary to remove the drain nut from the new drain before replacing the cone on the aircraft. After the cone has been fitted, replace the nut and wirelock with 22 SWG nickel alloy wire (item 9).

(d) Tests : Not applicable.

(e) Recording : Record the modification in the air frame log book.

Drawings

12. Drawing A.12072 is attached.

Effect on Weight and Balance

13. The effect of the incorporation of the modification on the weight and balance of the aircraft is negligible.

References : Files R.A.A.F. 9/84/472 and 150/4/8662
D.H. Mod. V638
A.M. Mod. VAM.3163
L.M.C. Meeting No. 42.

Attachment : Drawing A.12072.

Date of Issue : 4th January, 1954.

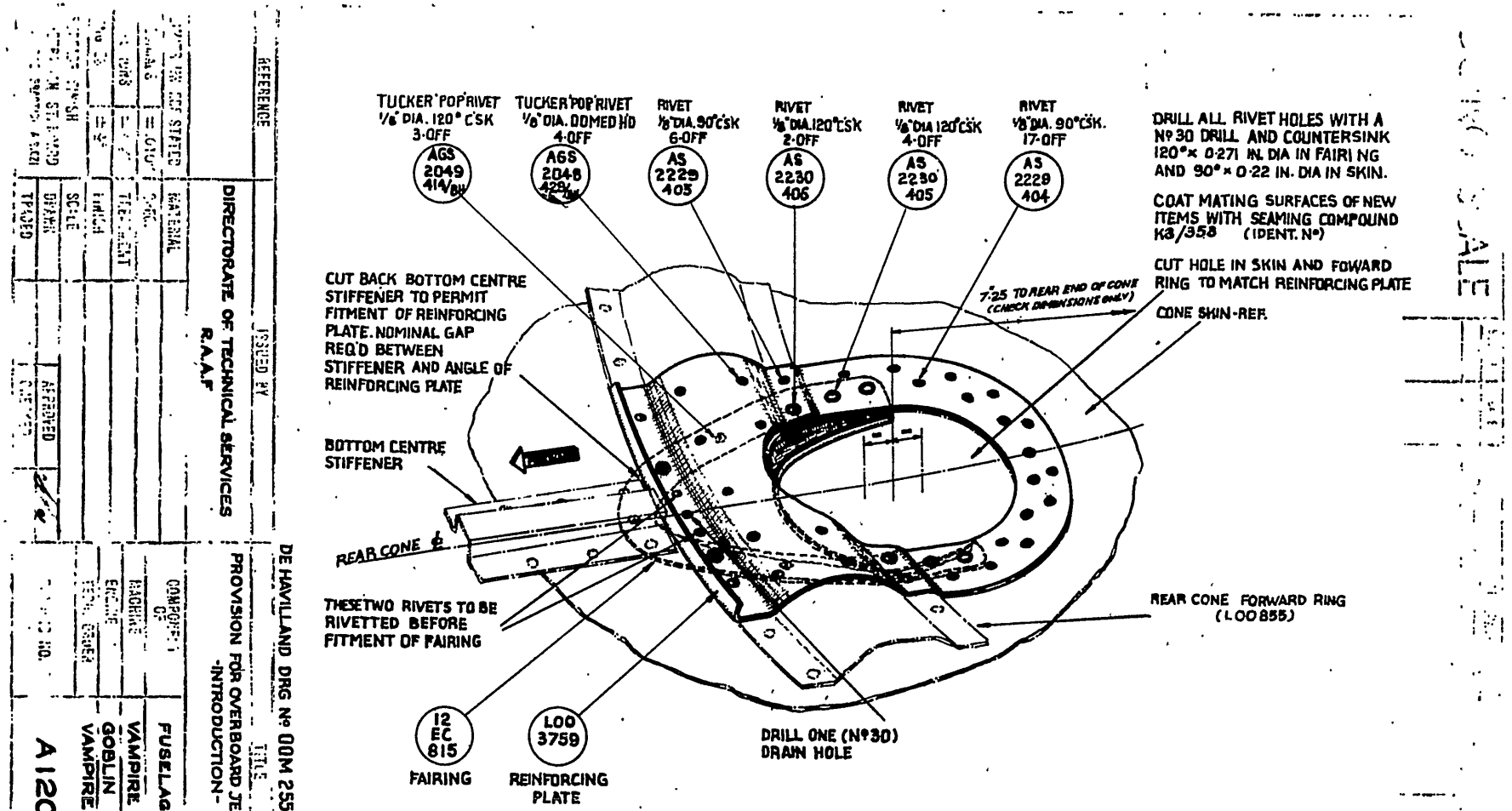

VIEW ON INSIDE OF REAR CONE SHOWING ATTACHMENT OF REINFORCING PLATE AND FAIRING

DE HAVILLAND DRG Nº 00M 255 SHEET 1 NO. SHEETS 1

DIRECTORATE OF TECHNICAL SERVICES R.A.A.F

PROVISION FOR OVERBOARD JET PIPE DRAIN PIPE -INTRODUCTION-

FUSELAGE

VAMPIRE MK 35

GOBLIN

VAMPIRE MOD. Nº 97

A12072

Air Force Head-Quarters — VAMPIRE MODIFICATION No. 98

Technical Order — Class 2

PIPE LINE BETWEEN WING TANKS AND FIREWALL - REDESIGNED

Reason for and Description of Modification

1. This modification authorises the introduction of a redesigned forward pipe line between the wing tank No. 1 and the fireproof bulkhead to facilitate removal and fitment of the wing tank and to eliminate the possibility of damage to the wing tanks and pipe run during removal and replacement.

Application

2. This modification is applicable to Vampire Mk.33 aircraft not incorporating the approved equivalent modification, De Havilland (Aust.) modification V184.

Responsibility for Incorporation

3. Units holding relevant aircraft are responsible for the incorporation of the modification. The trade mustering responsible is airframe fitter.

Action in Respect of Spares

4. Not applicable.

Orders Superseded or Cancelled

5. Not applicable.

Equivalent Modifications

6. The equivalent modification is De Havilland (Aust.) Modification V184.

Supply

7. The following parts are required to complete one modification set:-

Item No.	Ident. No.	Part No.	Nomenclature	No. off per set	Stores Class
1	A79/503362	P003861A	Adapter, fuel pipe	2	
2	A79/503363	P003867MD	Pipe, fuel transfer L.H.	1	
3	A79/503364	P003868MD	Pipe, fuel transfer R.H.	1	
4	H28/8183	AGS.605/1	Clip - Hose Pipe	4	

Item No.	Ident. No.	Part No.	Nomenclature	No. off per set	Stores Class
5	T32C/500049	DHS160/F30	Hose, aircraft I.D. 1 in. x O.D. $1\frac{3}{8}$ in.	2	
6	H28C/9439	AGS.1138H	Washer jointing coupling 1.31ID x 1.56 OD	2	
7	K3/353		Compound, jointing Spec. DTD 369A	AR	
8	I1/2188		Wire, Locking, 22G nickel alloy	AR	

Notes: (a) Items 1 to 6 inclusive are to be delivered from De Havilland Aircraft Pty. Ltd. to Sub-modification Section, 2 Aircraft Depot, which is to issue these items on demand.

(b) Items 7 and 8 are to be drawn from unit stores.

Disposal of Parts Removed

8. The following parts are redundant by the incorporation of this modification:-

Item No.	Ident. No.	Part No.	Nomenclature	No. off per Set	Stores Class
9	A79/503135	P15-5 and	Pipe, fuel transfer, L.H.	1	
10	A79/503136	13.P.53 "	Pipe, fuel transfer, R.H.	1	
11	H28C/11096	AGS.1105H	Adapter, fuel pipe	2	
12	H28C/9439	AGS.1138H	Washer	2	

Notes: (a) Items 9 and 10 are obsolete.

(b) Item 11 is to be examined and returned to stock if serviceable.

(c) Items 9, 10 and 12 are to be disposed of in accordance with the authorised current procedure.

Disposal of Parts in Stock

9. Items 9 and 10 are obsolete and are to be disposed of in accordance with the authorised current procedure.

When Modification is to be Incorporated

10. The modification is to be incorporated as soon as practicable, but not later than at next inspection, after receipt of modification sets.

Method of Incorporation

11. (a) Man-hours involved : Approximately ten (10) man-hours will be required to incorporate this modification.

(b) Special tools, jigs, &c. : Not applicable.

(c) Sequence of Operations :

(i) The following is the sequence of operations required for this modification and is common to both port and starboard tanks.

(ii) Lower the front bottom engine cowlings and drain the aircraft fuel tanks in accordance with current authorised procedure.

(iii) Remove the end cap of the wing root fairing by removing its securing bolts and retain all these items for use on re-assembly.

(iv) Remove and retain for re-assembly the cover plate and its countersunk attachment bolts.

(v) Break the locking wire and disconnect the union nut attaching the now redundant fuel pipes (items 9 and 10) to the wing tank adapter (item 11). Release the clip securing the fuel pipe to the hose coupling on the fireproof bulkhead and remove the fuel pipes (items 9 and 10) from the aircraft.

(vi) Remove the adapter (item 11) from the tank connector and discard the washer (item 12).

(vii) Assemble the new washer (item 6) and the new pipe adapter (item 1) to the tank connector and wire lock using 22 SWG nickle alloy wire (item 8).

(viii) Refer to the drawing and connect up the new pipes (item 2 port and item 3 starboard) to the pipe adapters (item 1) using the new hose coupling (item 5) and clips (item 4).

(ix) Re-connect the existing hose coupling and clips at the fireproof bulkhead.

(x) On completion of the port and starboard pipe runs, refill the aircraft tanks and check for leaks in accordance with current authorised procedure.

(xi) After the leak tests have been satisfactorily completed clean off and coat the contacting surfaces of the cover plate and the wing root fairing end cap with jointing compound (item 7). Re-assemble these items to the wing root using the attachment bolts removed in operations iii and iv.

(xii) Replace the front end cowling.

(xiii) Record the modification in the Airframe Log Book.

(d) Tests : Not applicable.

(e) Recording : Record the modification in the airframe log book.

Drawings

12. Drawing A.12076 is attached.

Effect on Weight and Balance

13. The effect of the incorporation of this modification on the weight and balance of the aircraft is negligible.

References : Files R.A.A.F. 9/84/459 and 150/4/8667
D.H.(Aust.)Mod. V184
A.M. Mod. Vam. 3059
L.M.C. Meeting No.42

Attachment : Drawing A.12076.

Date of Issue : 11th January, 1954.

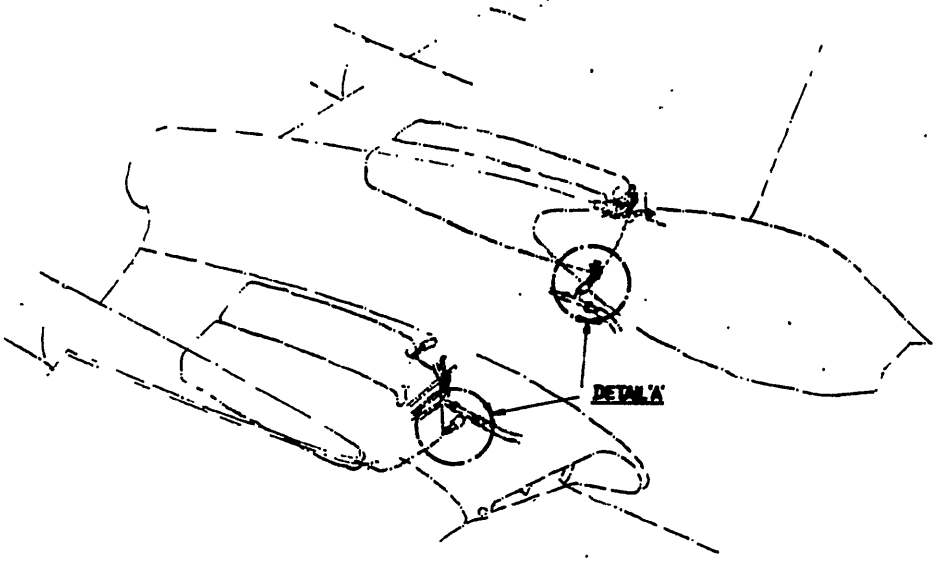

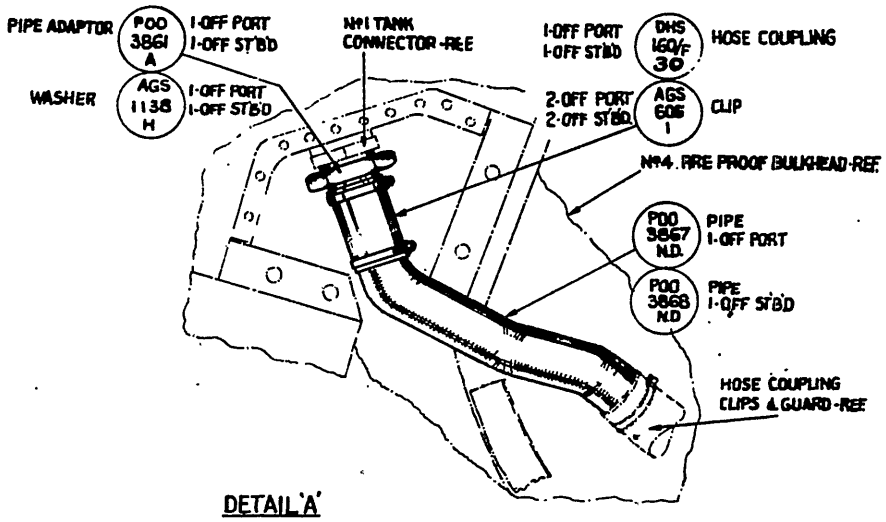

DETAIL 'A'

VIEW ON UNDERSIDE OF PORT WING-ROOT WITH FAIRING COVER PLATE AND FRONT ENGINE COWLING REMOVED
STARBOARD SIDE SIMILAR BUT OPPOSITE HAND

DEHAVILLAND DRG No 00M257 SHEET No 1 No OF SHEETS 1

DIRECTORATE OF TECHNICAL SERVICES R.A.A.F.

PIPE LINE BETWEEN WING TANKS AND FIRE WALL
-REDISIGNED-

FUSELAGE

VAMPIRE MK.33
GOBLIN
VAMPIRE MOD. No 98

A12076

Air Force Head-Quarters

VAMPIRE MODIFICATION NO.99

Technical Order

Classification: Class 2

MODIFIED MARTIN BAKER BLAST TUBES - INTRODUCTION

Reason for and Description of Modification

1. This modification authorises the introduction of modified Martin Baker blast tubes and has been necessitated by the deformation of the front cone due to lateral displacement and hammering against the rear end of the cannon spout.

Provision is made for the fitting of a modified nose ring on the blast tube assembly.

Application

2. This modification is applicable to Vampire Mk.33 - aircraft not incorporating the approved equivalent modification, De Havilland Aust. Modification V.637.

Responsibility for Incorporation

3. Units holding relevant aircraft are responsible for the incorporation of this modification. The trade mustering responsible is airframe fitter.

Action in Respect of Spares

4. Not applicable.

Order Superseded or Cancelled

5. Not applicable.

Equivalent Modifications

6. The equivalent modification is De Havilland (Aust.) Modification V.637.

Supply

7. The following parts are required to complete one modification set:-

Item No.	Ident. No.	Part No.	Nomenclature	No. off per Set	Stores Class
1		A/MBBT/94	Ring, nose, blast tube	2	
2	A79/503440	S001245	Clip, special, L.H.	1	
3	A79/503441	S001246	Clip, special, R.H.	1	
4	H128F/62212	AS455/505	Rivet, M.S. Snp. Hd., 5/32" x 5/16"	32	

Note: Items 1 to 4 inclusive are to be delivered from De Havilland Aircraft Pty. Ltd. to Sub-modification Section, No.2 Aircraft Depot, which is to issue these items on demand.

Disposal of Parts Removed

8. The following parts are redundant:-

Item No.	Ident. No.	Part No.	Nomenclature	No. off per Set	Stores Class
5		O/MEBT/69	Ring, nose, blast tube	2	
6	A79/502694	S00223	Clip, special, L.H.	1	
7	A79/503281	S00224	Clip, special, R.H.	1	
8	H128F/62212	AS455/505	Rivet, Snp. Hd., M.S. 5/32" x 5/16"	32	

Note: (a) Items 5, 6 and 7 are obsolete.

(b) Items 5 to 8 inclusive are to be disposed of in accordance with the current authorised procedure.

Disposal of Parts in Stock

9. Items 5, 6 and 7 are obsolete and are to be disposed of in accordance with the authorised current procedure.

When Modification is to be Incorporated

10. This modification is to be incorporated as soon as practicable, but not later than at next minor inspection after receipt of modification sets.

Method of Incorporation

11. (a) Man-hours involved : Approximately ten (10) man-hours will be required to incorporate this modification.

(b) Special Tools, jigs, &c. : Nil.

(c) Sequence of Operations

(i) Release and temporarily remove the port and starboard detachable cannon spout fairings.

Note: Operations (ii) to (v) inclusive apply to both port and starboard cannons.

(ii) Release the special clip (item 6 or 7) securing the blast tube to the front gun mounting and withdraw the blast tube assembly.

(iii) Remove the existing nose ring (item 5) from the inner tube of the blast tube assembly by slightly filing the heads, centre punching, drilling and tapping out the sixteen (16) rivets (item 8), care being taken not to enlarge or distort the rivet-holes in the inner tube.

(iv) Fit the new nose ring (item 1) over the inner tube and line up the rivet-holes in the nose ring with those in the inner tube as shown on the drawing. Secure the new nose ring in position with sixteen 5/32 inch diameter snap head rivets (item 4).

(v) Replace the modified blast tube assembly to the front gun mounting and secure with the new special clip (item 2 or 3).

Note: When fitting the blast tube and special clip, ensure that the slot in both is engaged with the eccentric locking bolt.

(vi) Alter the Part No. of the blast tube assembly C/MBBT/60 to read C/MBBT/83 - A79/503301.

(vii) Replace and secure the detachable nose panel.

(d) Tests : Not applicable.

(e) Recording : Record the modification in the Airframe Log Book.

Drawings

12. Drawing A12081 is attached.

Effect on Weight and Balance

13. The effect of the incorporation of this modification on the weight and balance of the aircraft is negligible.

References : Files R.A.A.F. 9/84/452 and 150/4/8668
D.H. Aust. Mod. V.637
A.M. Mod. VAM.3256
L.M.C. Meeting No. 45.

Attachment : Drawing A.12081.

Date of Issue : 4th January, 1954.

DO NOT SCALE

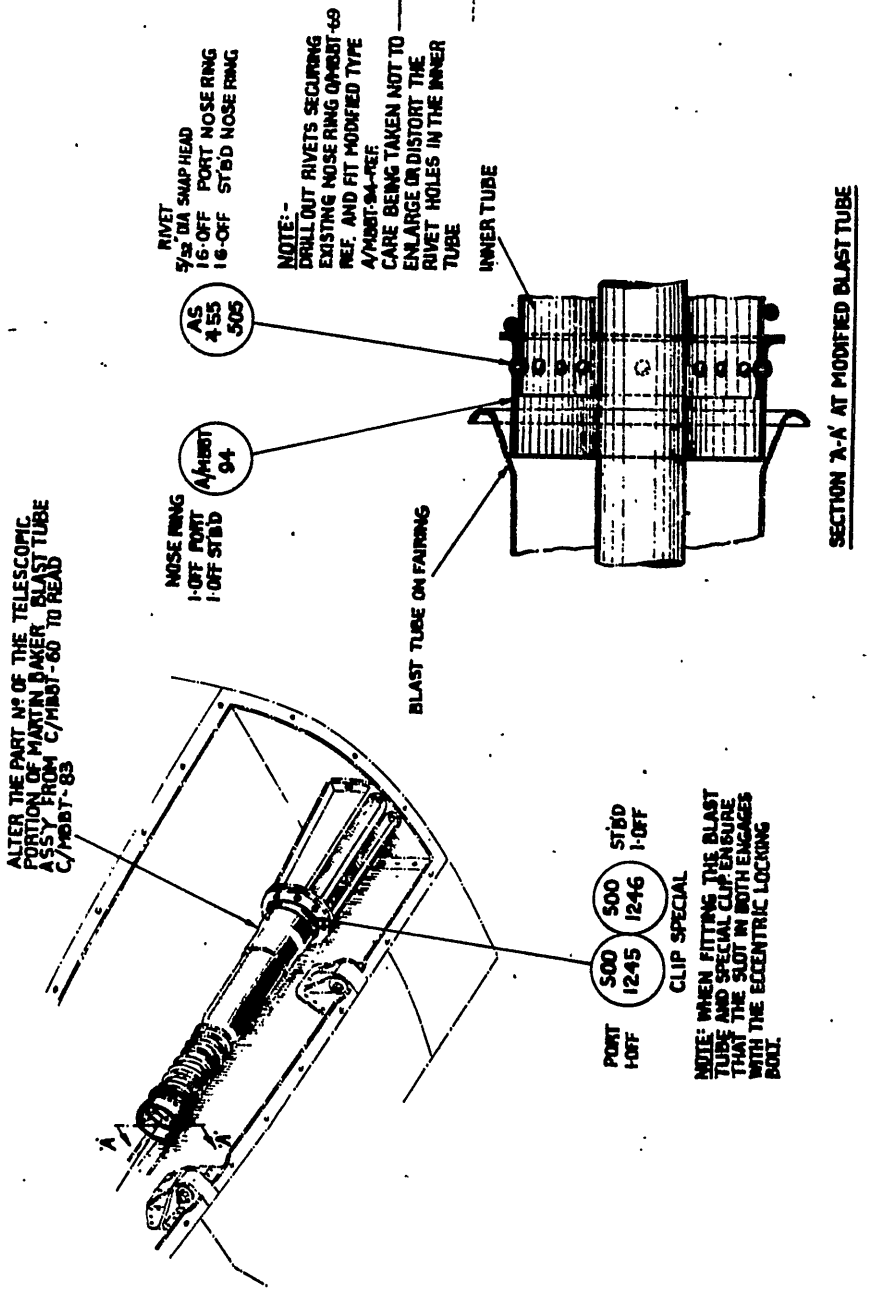

REFERENCE	ISSUED BY	DE HAVILLAND DRG Nº 00M 256 SHEET Nº1 Nº OF SHEETS 1
	DIRECTORATE OF TECHNICAL SERVICES. R.A.A.F.	TITLE: MODIFIED MARTIN BAKER BLAST TUBES-INTRODUCTION-

UNITS UNLESS STATED		MATERIAL		COMPONENT OF	FUSELAGE
DECIMALS	± .010"	SPEC.		MACHINE	VAMPIRE MK. 35.
FRACTIONS	± 1/32"	TREATMENT		ENGINE	GOBLIN.
ANGLES	± ½°	FINISH		TECH. ORDER	VAMPIRE MOD. Nº 99
SURFACE FINISH AUSTRALIAN STANDARD DRWG. PRACTICE A.S.621		SCALE		DRAWING NO.	A 12081
		DRAWN	APPROVED		
		TRACED	CHECKED		

RELIEF VALVE IN FUEL SYSTEM VENT LINE - INTRODUCTION - VAMPIRE TRAINER

Reason for and Description of Modification

1. (a) This modification authorises the introduction of a relief valve in the fuel system vent line to maintain a slightly positive pressure throughout the system to prevent the wing fuel tanks from panting.

(b) This modification must not be embodied before Vampire Modification No. 101 and can be conveniently embodied with, but not prior to Vampire Modification No. 105.

(c) For installation of the relief valve on Vampire Mk's 30 and 31 aircraft refer Vampire Modification No. 106.

Application

2. This modification is applicable to Vampire Mk. 33 aircraft not incorporating the approved equivalent modification, De Havilland (Aust.) modification V.174.

Responsibility for Incorporation

3. Units holding relevant aircraft are responsible for the incorporation of this modification. The trade mustering responsible is airframe fitter.

Action in Respect of Spares

4. Not applicable.

Orders Superseded or Cancelled

5. Nil.

Equivalent Modifications

6. The equivalent modification are De Havilland (Aust.) Modification V.174 and Air Ministry Modification Vampire 3209.

Supply

7. The following parts are required to complete one modification set:-

Supply (Cont'd)

Item No.	Ident. No.	Part No.	Nomenclature	No. Off per A/c	Stores Class
1	H128F/6040	AS2230/505	Rivet, 5/32" dia. x 5/16" long, c's'k 120° alum. alloy.	8	
2		13.S.1049A	Vent assy., hydraulic	1	
3	H128F/30312	AS2228/405	Rivet, $\frac{1}{8}$" dia. x 5/16" long, mushroom head alum. alloy.	2	
4	H128F/63365	AS2229/404	Rivet, $\frac{1}{8}$" dia. x $\frac{1}{4}$" long, c's'k 90°, alum. alloy.	8	
5		13.S.1055-AND	Pipe, vent, hydraulic	1	
6		P003727A/1	Valve, relief assy. fuel vent	1	
7	H28/7272	A25/2B	Bolt, 4 BA x .6" long, hex. H.T.S.	3	
8	H28/27024	AGS.2001/B/1Nyloc	Nut, stiff, 4 BA, M.S.	7	
9	H28C/12306	SP15/B	Washer, plain, al. alloy .157, i/d x .301 o/d x .048	7	
10	H28/8301	AS1242/2B	Bolt, 4 BA x .55" long, c's'k 90°, H.T.S.	2	
11	H28/8300	AS1242/1B	Bolt, 4 BA x .45" long, c's'k 90°, H.T.S.	2	
12		P003897	Packing	1	
13	H128F/6041	AS2230/506	Rivet, 5/32" dia. x $\frac{3}{8}$" long, c's'k 120°, alum. alloy	5	
14	K4/10880		Bostik 'C'	AR	
15	K3/353		Compound, jointing to spec. DTD.369A	AR	
16	11/2188		Wire, locking, 22 SWG, nickel alloy	AR	
17	132A/2006		Twine, coreless	AR	
18	K3/175		Zinc chromate (RAAF. spec. 2K7)	AR	
19	K3/162		Cellulose, matching (Spec. DTD.63A)	AR	

Note: Items 1 to 13 inclusive are to be delivered from De Havilland Aircraft Pty. Ltd., to Sub-modification Section, 2 Aircraft Depot, which is to issue these items on demand. Items 14 to 19 inclusive are to be drawn from unit stores.

Disposal of Parts Removed

8. The following parts are rendered redundant by the incorporation of this modification:-

Item No.	Ident. No.	Part No	Nomenclature	No. Off Per A/c	Stores Class
20		13.S.779A	Vent assy., fuel and hydraulic	1	
21		13.FS.2741	Packing, fibre	1	
22	H128F/30312	AS2228/405	Rivet, $\frac{1}{8}$" dia. x 5/16" long, mushroom head, alum. alloy.	11	
23	H128F/5735	AS2230/406	Rivet, $\frac{1}{8}$" dia. x $\frac{3}{8}$" long c's'k 120°, alum. alloy	7	
24	H128F/30311	AS2228/404	Rivet, $\frac{1}{8}$" dia. x $\frac{1}{4}$" long mushroom head, alum. alloy	6	
25	H128F.5725	AS2230/405	Rivet, $\frac{1}{8}$" dia. x 5/16" long, c's'k 120°, alum. alloy	1	
26		13.S.789AMD	Pipe, vent, hydraulic	1	

Note: Items 20 to 26 inclusive are to be disposed of in accordance with current authorised procedure.

Disposal of Parts in Stock

9. Not applicable.

When Modification is to be Incorporated

10. This modification is to be incorporated as soon as practicable, but not later than at next minor inspection, after receipt of modification sets.

Method of Incorporation

11. (a) Man-hours involved : Approximately forty (40) man-hours are required to incorporate this modification.

(b) Special tools, jigs, &c. : No special tools will be required.

Method of Incorporation (Cont'd)

(c) Sequence of Operations :

(i) Remove the engine as detailed in the Vampire Trainer Maintenance and Repair Manual, section 4, chapter 1, paragraphs 18 and 19.

(ii) Release the hydraulic accumulator pressure and drain the hydraulic fluid from the aircraft in accordance with current authorised procedure.

(iii) On the aft side of the fireproof bulkhead, disconnect the two hydraulic pipe assemblies from the ground test connection block, on the portside, and from the flanged half couplings on the support bracket at the bottom of the bulkhead. Release the two clamp blocks and remove the two pipes from the aircraft. Retain all parts for future re-assembly.

(iv) Seal all disconnected pipe ends and adapters in accordance with Australian Air Publication 702.1, Aircraft Engineering Instruction General No. 6/1/1.

(v) Remove the now redundant fuel and hydraulic vent assembly and the fibre packing, items 20 and 21 by drilling out the ten $\frac{1}{8}$ inch diameter rivets, items 22 and 23 attaching them to the lower starboard side of the fireproof bulkhead and to the cowling support channel, and by releasing the two hose couplings and the four clips connecting the vent assembly to the fuel and hydraulic vent pipes. Retain the hose couplings and clips.

(vi) Refer drawing A.12144, sheet 1. Drill out the first six rivets, item 24 securing the lower end of the vertical stiffener, in the way of the new relief valve assembly, to the bulkhead.

(vii) Cut back the stiffener as shown and remove the sharp edges.

(viii) Mark off, cut and file the cutaway for the relief valve assembly in the cowling support channel. Also cut back the bonnet tape.

(ix) Paint all surfaces left bare to match the surrounding colour scheme using items 18 and 19.

(x) Refer the drawing again. Open up the inboard of the existing holes, previously used for rivets, attaching the redundant fuel and hydraulic vent assembly to the bulkhead, using a No. 26 drill.
Mark off the position of the other two holes as shown and drill two more No. 26 holes.

Method of Incorporation (Cont'd)

(xi) Drill out the eight rivets, item 22 attaching the cowling support channel, which are in the way of the new relief valve assembly.

(xii) Using a No.21 drill, open up the thirteen (13) redundant holes as shown, countersink 120° and fit thirteen (13) rivets, items 1 and 13 to blank off.

(xiii) Offer up the hydraulic vent assembly, item 2. Its position is located by the existing rivet hole as shown on drawing A.12144, sheet 1.

(xiv) Using a No. 30 drill, remove the rivet, item 25 securing the bonnet tape to the cowling support channel, if it prevents the vent bracket sealing flat on the channel.

(xv) Mark off the clearance hole for the hydraulic vent pipe protrusion in the cowling support channel. Drill a No.30 pilot hole and open up using a 7/16 inch diameter drill.
Also drill the two No. 30 holes in the bulkhead and the two No. 30 holes in the channel, the latter to be countersunk 90° on the undersurface. Apply jointing compound, item 15 to all mating surfaces and proceed to secure the hydraulic vent assembly to the bulkhead and the support channel using rivets, items 3 and 4.

(xvi) Cut the bonnet tape to suit the vent pipe protrusion and attach it to the cowling channel with Bostik 'C', item 13.

(xvii) Disconnect the hydraulic vent pipe from the banjo connection at the top of the fireproof bulkhead. Discard the pipe, item 26. Fit the new pipe, item 5 in lieu. Connect up the lower end of the pipe to the new vent assembly, using the coupling hose and two clips retained in operation (v). Whip the pipe, where necessary to the fuel vent pipe with waxed coreless twine, item 17.

(xviii) Offer up the new relief valve assembly, item 6. Cut the existing fuel vent pipe to give an 0.25 inch clearance between the end of the fuel vent pipe and the valve assembly inlet pipe. Remove the sharp edges.

(xix) Seat the valve assembly firmly on the inside of the support channel. Using a No. 26 drill, spot from the three holes in the bulkhead, drilled in operation (x) into the valve assembly attachment bracket.
Temporarily attach the valve assembly to the bulkhead using two bolts, nuts and washers, items 7, 8 and 9.

Method of Incorporation (Cont'd)

(xx) From the four existing holes in the base of the valve assembly drill four No. 26 holes into the cowling channel.

(xxi) Remove the valve assembly. Deburr all holes. Countersink the two outboard holes in the channel 90°. Apply jointing compound, item 15 to the mating surface.

(xxii) Assemble the vent relief valve to the bulkhead and the channel as shown on drawing A.12144, sheet 1, using bolts, items 10 and 11, nuts, item 8, washers, item 9 and packing item 12.

(xxiii) Connect the vent pipe to the valve assembly with the hose and clips retained in operation (v).

(xxiv) Refer drawing A.12144, sheet 2. Mark off, cut and file the cutaway and hole in the starboard lower inspection door as shown.
Drill the four or five additional rivet holes as explained on the drawing. Countersink 90° in the outer skin. Rivet up with either four or five rivets, item 4.

(xxv) Alter the Part No. of the door L00432AMD to read L003757 AMD.

(xxvi) Reassemble the pipelines, removed in operation (ii). Wirelock where necessary using 22 SWG locking wire, item 16.

(xxvii) Replace the engine and test.

(d) Tests : Fill, prime and functional test the hydraulic system in accordance with current authorised procedure.

(e) Recording : Record the modification in the Airframe Log Book.

Drawings

12. Drawing A.12144, sheets 1 and 2 is attached.

Effect on Weight and Balance

13. The effect of the incorporation of this modification on the weight and balance of the aircraft is negligible.

References : Files R.A.A.F. 9/84/74 and 150/4/8703.

Attachment : Drawing A.12144, sheets 1 and 2.

Date of Issue : 12th May, 1954.

DE HAVILLAND DRG. No 00M 248 SHEET 1

REFERENCE	ISSUED BY	TITLE
	Directorate of Technical Services. R.A.A.F.	RELIEF VALVE IN FUEL VENT LINE-INTRODUCTION- -VAMPIRE TRAINER-
UNLESS STATED	MATERIAL	
± .010"	SPEC.	
± 1/64"	INSTALLATION	
± 1°	FINISH	
CODE FINISH	SCALE	
		Fuel system
		Vampire Mk. 33
		Goblin
		Vampire Mod. No. 100
		A-12144 Sht. 1

DO NOT SCALE

ISSUE NO	DATE	ALTERATION

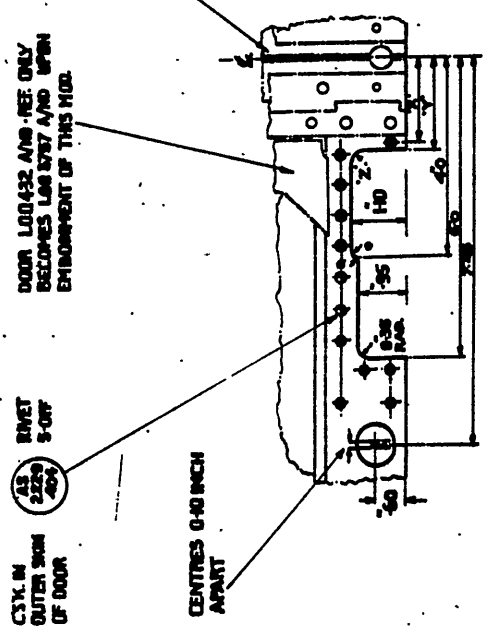

DE HAVILLAND DRG Nº OOM 848 SHEET Nº 2 OF 2 SHEETS

REFERENCE	ISSUED BY	TITLE
	Directorate of Technical Services. R.A.A.F.	RELIEF VALVE IN FUEL VENT LINE - INTRODUCTION - VAMPIRE TRAINER -

LIMITS UNLESS STATED		MATERIAL	
DECIMALS	± .010"	SPEC.	
FRACTIONS	± 1/32"	TREATMENT	
ANGLES	± 1°	FINISH	
SURFACE FINISH AUSTRALIAN STANDARD FMC DRWG. PRACTICE A.S.C.71		SCALE	
		DRAWN	APPROVED
		TRACED	CHECKED

COMPONENT OF	Fuel system
MACHINE	Vampire MK.33
ENGINE	Goblin
TECH. ORDER	Vampire Mod. No. 100
DRAWING NO.	A-12144 Sht 2

END